SHL PUMP RANGE

CRESTPUMPS
CHEMICAL PUMPING SOLUTIONS

HORIZONTAL END SUCTION, **MECHANICALLY SEALED**, CENTRIFUGAL PUMPS

- CAPACITY <2000 M^3/HR
- HEAD <150 Metres
- VARIOUS IMPELLER OPTIONS
- VARIOUS SEAL OPTIONS
- LOW NPSHr
- ISO2858 / EN25199
- 316 STAINLESS STEEL CONSTRUCTION

Part of the
STAINLESS STEEL
Pump Range

SHC

SHL

SVB

SVC

SHL OVERVIEW

Crest Pumps SHL range of horizontal mechanically sealed chemical pumps have been a market leader in the chemical and water treatment industry for over 15 years.

Built to a heavy duty standard in a stainless steel construction, the pump is built to ISO2858 and EN25199 which helps to ensure up to 100,000 operational hours. Minimal maintenance and high efficiency reduces downtime. The SHL range is available with open/closed or vortex impeller options.

FLEXIBILITY

Because of the modularity of components, either the open or closed impeller can be fitted, and with 15 different seal types. The flexibility of using one pump type for various applications reduces the cost of keeping strategic spares in stock.

The SHL range comes with a choice of impeller designs to best fit your application. The open impeller and vortex impeller are suitable for aggressive liquids with suspended solids and high viscosities. The vortex impeller option features a recessed impeller, meaning over 60% of the liquid does not come into contact with the impeller, minimising risk of clogging.

MODULAR DESIGN

The SHL range comes in three modular designs (close coupled, lantern and long coupled with base plate). The lantern bracket execution avoids any potential issues related to misalignment between the pump and motor.

The same bearing housing can be used for pumps with open, channel, closed or vortex impellers. Built according to EN25199 ensures minimal shaft deflection and over 100,000 hours of operation.

2 YEAR WARRANTY

ATEX ZONE 1/2 CERTIFIED

HIGH EFFICIENCY

CORROSION RESISTANCE

ISO2858 / EN25199

FLEXIBLE TO DESIGN SPEC

OVER 100,000 OP HOURS

STAINLESS STEEL MECHANICAL SEAL PUMPS

Tel: +44 (0)1425 627700
Email: info@crestpumps.co.uk
www.crestpumps.co.uk

SHL PUMP RANGE

CRESTPUMPS
CHEMICAL PUMPING SOLUTIONS

HORIZONTAL END SUCTION, **MECHANICALLY SEALED**, CENTRIFUGAL PUMPS

TECHNICAL SPECIFICATION

MODEL	SUCTION / DISCHARGE (mm*mm)	SPEED (rpm)	RATED CAPACITY (m^3/hr)	RATED HEAD (m)	MAX CAPACITY (m^3/hr)	MAX HEAD (m)	MOTOR OUTPUT (Kw)	BEST EFFICIENCY (%)
50-32-160	50*32	2900	15	34	20	40	4	53
50-32-200	50*32	2900	16	53	18	60	7.5	50
65-40-160	65*40	2900	26	33	40	40	5.5	60
65-40-200	65*40	2900	24	52	38	60	9.2	64
80-50-160	80*50	2900	54	31	70	38	9.2	73
80-50-200	80*50	2900	56	51	70	60	15	66
80-50-250	80*50	2900	54	78	75	100	30	50
100-65-160	100*65	2900	80	31	130	40	15	69
100-65-200	100*65	2900	96	51	140	60	22	71
100-65-250	100*65	2900	96	80	160	94	45	65
100-65-310	100*65	2900	108	124	150	144	75	59
125-80-160	125*80	2900	132	30	180	37	18.5	73
125-80-200	125*80	2900	160	52	270	60	45	77
125-80-250	125*80	2900	180	80	240	94	75	73
125-80-310	125*80	2900	180	124	250	144	110	67
125-100-200	125*100	2900	270	55	350	62	55	78
125-100-250	125*100	2900	240	78	370	92	90	74
125-100-310	125*100	2900	240	128	320	144	160	73
125-100-400	125*100	1450	170	53	220	60	45	68
150-125-250	150*125	2900	440	78	560	94	160	85
150-125-310	150*125	1450	210	30	300	35	30	76
150-125-400	150*125	1450	220	54	290	58	55	71
200-150-310	200*150	1450	420	26	640	33	45	79
200-150-350	200*150	1450	430	38	680	46	75	81
250-200-350	250*200	1450	640	33	1050	43	90	79
250-200-450	250*200	1450	920	55	1200	72	200	77
300-250-350	300*250	1450	920	31	1350	40	110	79
300-250-450	300*250	1450	1200	48	1600	65	200	79
350-300-450	300*250	1450	1700	49	2400	62	315	83

PUMPS

STAINLESS STEEL MECHANICAL SEAL PUMPS

Tel: +44 (0)1425 627700
Email: info@crestpumps.co.uk
www.crestpumps.co.uk

SHL PUMP RANGE

CRESTPUMPS
CHEMICAL PUMPING SOLUTIONS

HORIZONTAL END SUCTION, **MECHANICALLY SEALED**, CENTRIFUGAL PUMPS

PUMP RANGE CURVES

Pump curves for the SHL Stainless steel Mechanical Seal Pumps

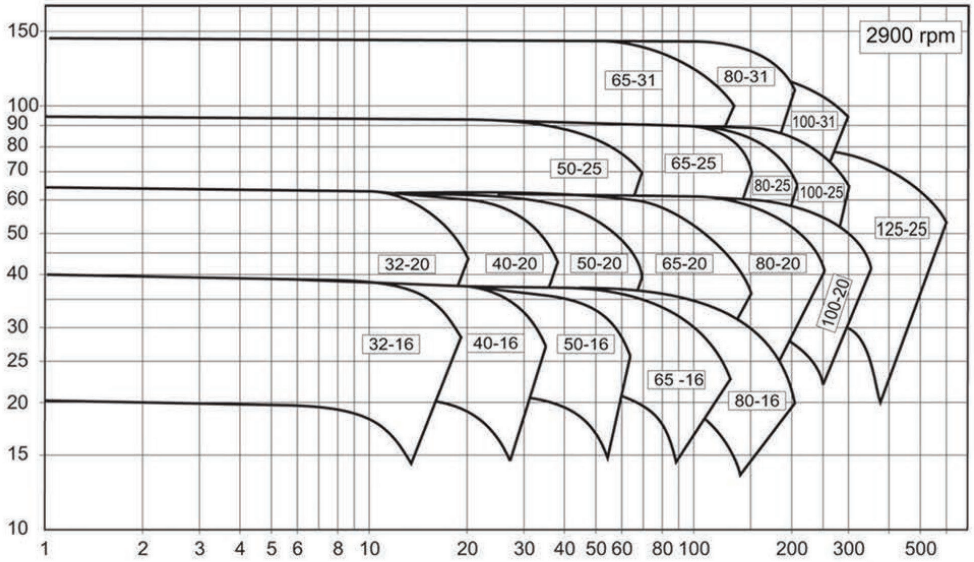

MODULAR DESIGN

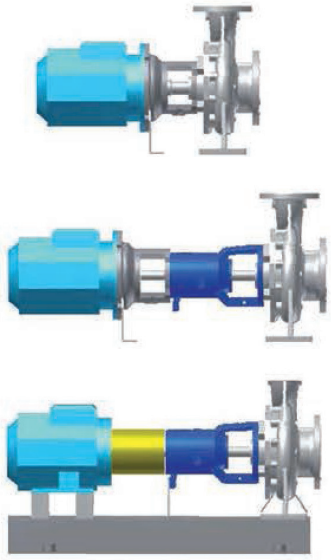

The SHL range comes in three modular designs (close coupled, lantern and long coupled with base plate).

The lantern bracket execution avoids potential issues related to misalignment between the pump and motor.

The same bearing housing can be used for pumps with open, channel closed or vortex impellers. Built according to EN25199, ensuring minimal shaft deflection and over 100,000 hours of operation.

Tel: +44 (0)1425 627700
Email: info@crestpumps.co.uk
www.crestpumps.co.uk

SHL PUMP RANGE

CRESTPUMPS
CHEMICAL PUMPING SOLUTIONS

HORIZONTAL END SUCTION, **MECHANICALLY SEALED**, CENTRIFUGAL PUMPS

RANGE DIMENSIONS

Overall dimensions on base with standard coupling. For different impeller or design options please contact us at info@crestpumps.co.uk or telephone +44 (0)1425 627700.

NOTE:

1. The total length and weight of the pump will differ depending on the brand of the motor.
2. All dimensions are in mm.
3. Assembly tolerances are +/- 3mm.

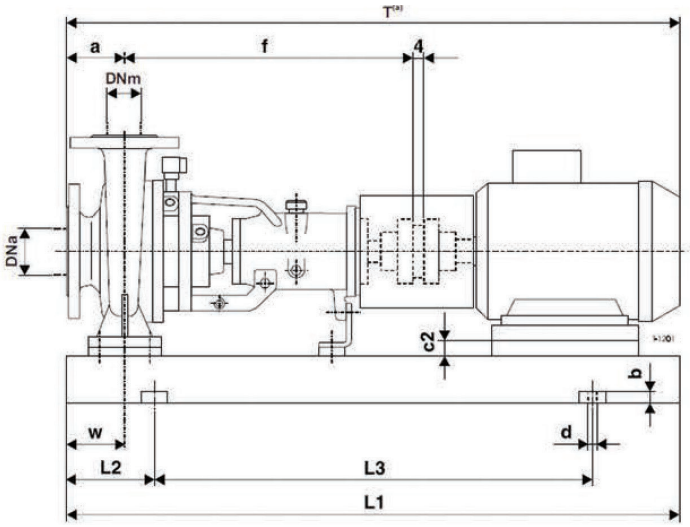

** please see next page for Dimensions Table

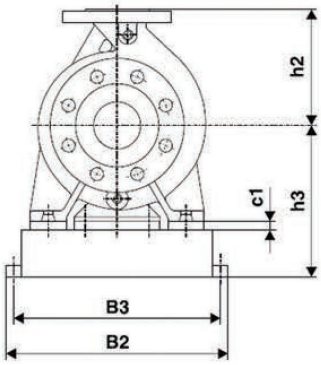

DIMENSIONS FLANGE

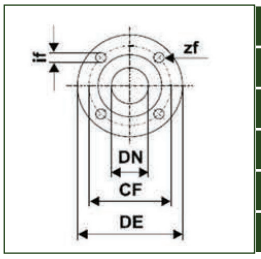

EN 1092-1 PN FLANGE DIMENSIONS							
DNa - DNm	32	40	50	65	80	100	125
CF	100	110	125	145	160	180	210
DE	140	150	165	185	200	220	250
if	18	18	18	18	18	18	18
zf	4	4	4	4	8	8	8

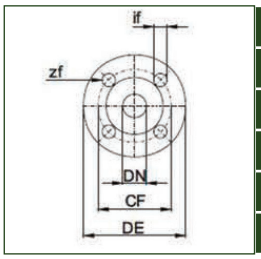

EN 1092-1/2 PN 10 FLANGE DIMENSIONS							
DNa - DNm	32	50	65	80	100	125	150
CF	100	125	145	160	180	210	240
DE	140	165	185	200	220	250	285
if	18	18	18	18	18	18	23
zf	4	4	4	8	8	8	8

Tel: +44 (0)1425 627700
Email: info@crestpumps.co.uk
www.crestpumps.co.uk

DIMENSIONS TABLE

PUMP SIZE	MOTOR SIZE	BASE PLATE NO.	DIMENSIONS (mm)																	Weight (kg)
			DNa	DNm	a	f	h3	h2	L1	L2	L3	B2	B3	w	d	b	c1	c2	??	
50-32-160	80	1	50	32	80	385	192	160	720	120	510	350	320	60	19	30	0	52	741	63
	90S	"	"	"	"	"	"	"	"	"	"	"	"	"	"	"	"	42	764	68
	90L	"	"	"	"	"	"	"	"	"	"	"	"	"	"	"	"	"	789	72
	100L	"	"	"	"	"	"	"	"	"	"	"	"	"	"	"	"	32	827	77
	112M	"	"	"	"	"	"	"	"	"	"	"	"	"	"	"	"	20	841	86
	132S	2	"	"	"	"	252	"	1000	170	660	400	360	"	"	"	"	0	930	128
	132M	"	"	"	"	"	"	"	"	"	"	"	"	"	"	"	"	"	"	"
50-32-200	80	1	50	32	80	385	220	180	720	120	510	350	320	60	19	30	0	80	741	69
	90S	"	"	"	"	"	"	"	"	"	"	"	"	"	"	"	"	70	764	73
	90L	"	"	"	"	"	"	"	"	"	"	"	"	"	"	"	"	"	789	76
	100L	"	"	"	"	"	"	"	"	"	"	"	"	"	"	"	"	60	827	83
	112M	"	"	"	"	"	"	"	"	"	"	"	"	"	"	"	"	48	841	92
	132S	2	"	"	"	"	280	"	1000	170	660	400	360	"	"	"	"	29	930	134
	132M	"	"	"	"	"	"	"	"	"	"	"	"	"	"	"	"	"	"	"
	160M	3	"	"	"	"	"	"	1200	205	790	440	400	"	"	"	"	0	1065	168
65-40-160	80	1	65	40	80	385	190	160	720	120	510	350	320	60	19	30	0	52	741	64
	90S	"	"	"	"	"	"	"	"	"	"	"	"	"	"	"	"	42	764	68
	90L	"	"	"	"	"	"	"	"	"	"	"	"	"	"	"	"	"	789	73
	100L	"	"	"	"	"	"	"	"	"	"	"	"	"	"	"	"	32	827	79
	112M	"	"	"	"	"	"	"	"	"	"	"	"	"	"	"	"	20	841	87
	132S	2	"	"	"	"	252	"	1000	170	660	400	360	"	"	"	"	0	930	129
	132M	"	"	"	"	"	"	"	"	"	"	"	"	"	"	"	"	"	"	"
	160M	3	"	"	"	"	280	"	1200	205	790	440	400	"	"	"	28	"	1065	163
65-40-200	80	1	65	40	100	385	220	180	720	120	510	350	320	60	19	30	0	80	761	69
	90S	"	"	"	"	"	"	"	"	"	"	"	"	"	"	"	"	70	784	72
	90L	"	"	"	"	"	"	"	"	"	"	"	"	"	"	"	"	"	809	74
	100L	"	"	"	"	"	"	"	"	"	"	"	"	"	"	"	"	60	847	78
	112M	"	"	"	"	"	"	"	"	"	"	"	"	"	"	"	"	48	861	91
	132S	2	"	"	"	"	280	"	1000	170	660	400	360	"	"	"	"	28	950	133
	132M	"	"	"	"	"	"	"	"	"	"	"	"	"	"	"	"	"	"	"
	160M	3	"	"	"	"	"	"	1200	205	790	440	400	"	"	"	"	0	1085	167
80-50-160	80	1	80	50	100	385	220	180	720	120	510	350	320	60	19	30	0	80	761	70
	90S	"	"	"	"	"	"	"	"	"	"	"	"	"	"	"	"	70	784	73
	90L	"	"	"	"	"	"	"	"	"	"	"	"	"	"	"	"	"	809	76
	100L	"	"	"	"	"	"	"	"	"	"	"	"	"	"	"	"	60	847	81
	112M	"	"	"	"	"	"	"	"	"	"	"	"	"	"	"	"	48	861	91
	132S	2	"	"	"	"	280	"	1000	170	660	400	360	"	"	"	"	28	950	132
	132M	"	"	"	"	"	"	"	"	"	"	"	"	"	"	"	"	"	"	132
	160M	3	"	"	"	"	"	"	1200	205	790	440	400	"	"	"	"	0	1085	166
	160L	"	"	"	"	"	"	"	"	"	"	"	"	"	"	"	"	"	"	175
80-50-200	90S	1	80	50	100	385	220	200	750	120	510	350	320	60	19	30	0	70	784	78
	90L	"	"	"	"	"	"	"	"	"	"	"	"	"	"	"	"	"	809	81
	100L	"	"	"	"	"	"	"	"	"	"	"	"	"	"	"	"	60	847	86
	132S	2	"	"	"	"	280	"	1000	170	660	400	360	"	"	"	"	28	950	137
	132M	"	"	"	"	"	"	"	"	"	"	"	"	"	"	"	"	"	1085	171
	160M	3	"	"	"	"	"	"	1200	205	790	440	400	"	"	"	"	0	"	180
	160L	"	"	"	"	"	"	"	"	"	"	"	"	"	"	"	"	"	"	190
	180M	"	"	"	"	"	300	"	"	"	"	"	"	"	"	"	"	"	1175	217
	180L	"	"	"	"	"	"	"	"	"	"	"	"	"	"	"	"	"	"	217
80-50-250	100L	2	80	50	125	500	300	225	1000	170	660	400	360	75	19	30	0	80	967	128
	112M	"	"	"	"	"	"	"	"	"	"	"	"	"	"	"	"	68	1101	134
	132S	"	"	"	"	"	"	"	"	"	"	"	"	"	"	"	"	48	1090	139
	132M	"	"	"	"	"	"	"	"	"	"	"	"	"	"	"	"	20	"	145
	160M	3	"	"	"	"	"	"	1200	205	790	440	400	"	"	"	"	0	1225	206
	160L	"	"	"	"	"	"	"	"	"	"	"	"	"	"	"	"	"	"	216
	180M	"	"	"	"	"	"	"	"	"	"	"	"	"	"	"	"	"	1315	239
	180L	"	"	"	"	"	"	"	"	"	"	"	"	"	"	"	"	"	1330	245
	200L	5	"	"	"	"	320	"	"	"	"	506	465	"	"	"	20	"	1350	304
	225S	6	"	"	"	"	390	"	1300	215	870	510	460	"	24	"	70	25	1429	345
	225M	"	"	"	"	"	"	"	"	"	"	"	"	"	"	"	"	"	"	381
	250M	"	"	"	"	"	415	"	"	"	"	"	"	"	"	"	96	"	1459	416
100-65-160	80	2	100	65	100	500	280	200	1000	170	660	400	360	75	19	30	0	80	876	177
	90S	"	"	"	"	"	"	"	"	"	"	"	"	"	"	"	"	70	899	120
	90L	"	"	"	"	"	"	"	"	"	"	"	"	"	"	"	"	"	924	123
	100L	"	"	"	"	"	"	"	"	"	"	"	"	"	"	"	"	60	962	128
	132S	"	"	"	"	"	"	"	"	"	"	"	"	"	"	"	"	28	1065	152
	132M	"	"	"	"	"	"	"	"	"	"	"	"	"	"	"	"	"	"	152
	160M	3	"	"	"	"	"	"	1200	205	790	440	400	"	"	"	"	0	1200	198
	160L	"	"	"	"	"	"	"	"	"	"	"	"	"	"	"	"	"	"	213
100-65-200	90L	2	100	65	100	500	300	225	1000	170	660	400	360	75	19	30	0	90	924	137
	100L	"	"	"	"	"	"	"	"	"	"	"	"	"	"	"	"	80	964	142
	112M	"	"	"	"	"	"	"	"	"	"	"	"	"	"	"	"	68	1976	149
	132S	"	"	"	"	"	"	"	"	"	"	"	"	"	"	"	"	48	1065	159
	132M	"	"	"	"	"	"	"	"	"	"	"	"	"	"	"	"	"	"	165
	160M	3	"	"	"	"	"	"	1200	205	790	440	400	"	"	"	"	20	1200	211
	160L	"	"	"	"	"	"	"	"	"	"	"	"	"	"	"	"	"	"	211
	180M	"	"	"	"	"	"	"	"	"	"	"	"	"	"	"	"	0	1290	238
	180L	"	"	"	"	"	"	"	"	"	"	"	"	"	"	"	"	"	"	302
	200L	5	"	"	"	"	"	"	"	"	"	505	465	"	"	"	20	"	1325	340

SHL PUMP RANGE

CRESTPUMPS
CHEMICAL PUMPING SOLUTIONS

HORIZONTAL END SUCTION, **MECHANICALLY SEALED**, CENTRIFUGAL PUMPS

CASE STUDY - ENGIE FABRICOM

"Engineering and design consultancy, ENGIE Fabricom, commissioned Crest Pumps to supply eight SHL pumps for the new waste to energy plant built in Hull"

ENGIE Fabricom

ENGIE Fabricom in the UK has a wealth of 40 years' experience in the Oil, Gas, Power, Chemical, Energy From Waste and Renewables industries.

Humber is the biggest exporter of waste to Europe – hundreds of thousands of tonnes are loaded onto ships bound for environmentally conscious Scandinavia and Germany, where it is used to fuel district heating plants.

In 2017, a £200m power plant was built in Hull to intercept 250,000 tonnes of mostly black bin 'residual' household waste from councils across the UK, which has already had valuable steel and non-ferrous metals like aluminium taken out. The project doesn't involve incineration, but a process called fluidised bed gasification where waste is suspended in air. Without sufficient oxygen to burn it, it turns into ash and gives off a "syngas." Essentially it breaks it down to smaller molecules which gives a much purer combustion process. The power for the boiler is gas not waste.

ENGIE Fabricom provides engineering design consultancy to M+W the construction company delivering the new facility. ENGIE provides expertise and support by process engineering and design of the Water Steam Cycle. It commissioned Crest Pumps to supply eight SHL pumps, 4 self priming, for pumping effluent water at <300m3/hr. The pumps were delivered to spec and on time.

CREST STAINLESS STEEL MECHANICAL SEAL SHL PUMPS - UTILISED BY

Thames Water · Coca-Cola · WÄRTSILÄ · VEOLIA WATER · AkzoNobel · Dŵr Cymru Welsh Water · Scottish Water Always serving Scotland · United Utilities

SHL PUMP APPLICATIONS

CHEMICAL

The SHL range of Crest Pumps are fully corrosion resistant to a wide variety of applications. They have been successfully installed to support high flow rates, pressures and temperatures, boasting up to 80% efficiency.

WATER TREATMENT

Waste water and water applications are suited for the SHL range as the rugged design prevents any rust or corrosion.
The large flow rate and high heads on the SHL make it the best solution for industrial liquids, waste water or irrigation.

PHARMACEUTICAL

The SHL range with a closed impeller are suitable for clean liquids or small solids. Designed to meet a wide range of industrial standards providing a safe and continuous operation, paramount to any process line.

STAINLESS STEEL MECHANICAL SEAL PUMPS

Tel: +44 (0)1425 627700
Email: info@crestpumps.co.uk
www.crestpumps.co.uk