Verderflex

iDura 5

PolyPump Ltd
Providing your pumping solutions
sales@polypump.co.uk
01296 488 294

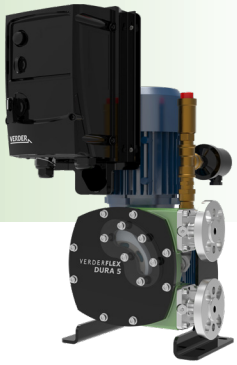

VERDERFLEX®

Description

The Verderflex iDura 5 is a complete “ready to use” Dura 5 hose pump with pump mounted inverter and standard hose burst protection.

The iDura 5 is a compact, industrial hose pump with superior secondary containment for dosing, metering, sampling and sump emptying in chemical and industrial processing complexes, food and beverage facilities and clean and wastewater treatment plants. The pump mounted inverter provides the flexibility of local pump control or automatic monitoring and control real time via external systems. The factory connected hose burst sensor will stop the pump unit on hose burst for enhanced plant operator’s peace of mind & the inverter’s local controls reduces ownership costs by speeding up the infrequent hose changes.

Pump Features

- Ideal for abrasive or high solid content slurries
- Self-Priming, problem free pumping of gaseous liquids
- Easily pumps viscous liquids
- Gentle low shear pumping action
- Dry running capabilities
- Long life hoses
- No seals or valves

iDura Features

- Variable speed control, between maximum and minimum flow rates
- Standard hose burst protection automatically stops the pump on a hose burst.
- Intuitive speed and directional controls with real-time monitoring of parameters using built-in display.
- Displays nominal flow rate[1]
- Scalable 4-20mA speed control input as standard, MODBUS/CANBUS digital remote control optional [2]

1 This is factory set to indicate nominal flow rate in l/hr.

2 Inverter will have to be programmed by the user to access this function, please refer to the manual.

Technical Data

Flow Rate Range	2 - 22.5 l/h
Frequency Range	5 - 58.3 Hz
Power Supply Rating	200-240V AC 50-60Hz 1 Phase 380-480V AC 50-60Hz 3 Phase
Installed Motor Power	0.55kW
Installed Inverter Power	0.75kW
IP Ratings	IP 66/ NEMA 4X outdoor rating (inverter) IP55 (motor)
Maximum Discharge Pressure	5 bar
Maximum Suction Lift	9.5 mwc
Hose ID	5 mm
Maximum Medium Temperature [3]	80°C
Maximum Incompressible Solid Size	0.55 mm
Maximum Compressible Solid Size	1.25 mm
Ambient Temperature [4]	-5 to +40°C

3 Continuous use with NR hose.

4 Continuous operation at the specified maximum discharge pressure, in an ambient temperature of -5 to +40°C.

Verderflex

iDura 5

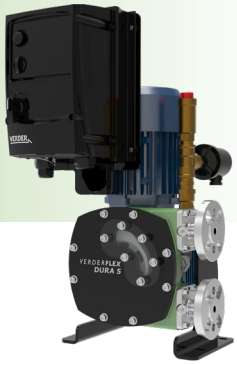

VERDERFLEX®

Materials

Description	Material	Paint Detail
Pump Housing	Cast Iron (GG25)	Green Powder Coated
Front Cover	Carbon Steel with Plexiglass Inspection Window	Powder Coated
Rotor	Cast Iron (GG25)	
Drive Shaft	EN24T Steel	
Port Flange	316 Stainless Steel Universal slotted design fits with DIN PN16, ANSI 150# & JIS10K Options: 316 Stainless Steel with Polypropylene or P.V.D.F Insert [5]	
Inverter	Chassis materials aluminium and polymer (electrical and electronic equipment)	
Hose Burst Kit	Brass	
Mounting Frame	Carbon Steel	Powder Coated
Gearbox Flange	Aluminium	
Bearing	Steel	
Shaft Seal	Viton	
Lubricant	Verderlube - Glycerine based lubricant [6] Verdersil - Silicone based lubricant [7]	
Hose	Natural Rubber (NR) Options: Nitrile Buna Rubber (NBR) and Hypalon® (CSM)	
Weight	Complete pump including motor, gearbox and inverter: ~25.5 kg	

5 Temperature Limit for PP insert is 40°C and for PVDF insert is 80°C.
6 Temperature Limit for Verderlube is 50°C.
7 Suitable for application above 50°C, but subject to maximum temperature limit of the hose and applications involving strong oxidising agents and nitrogenous compounds.

Verderflex

iDura 5

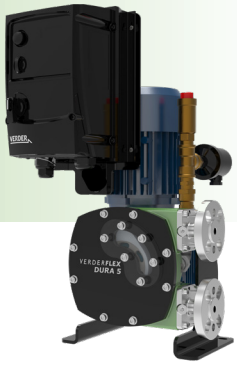

VERDERFLEX®

Performance Range

Flow l/hr	Pump Speed RPM	Motor Frequency Hz
2	6	5
4	11	9.2
8	23	19.2
11	35	29.2
15	47	39.2
18	56	46.7
22.5	70	58.3

Performance Curve

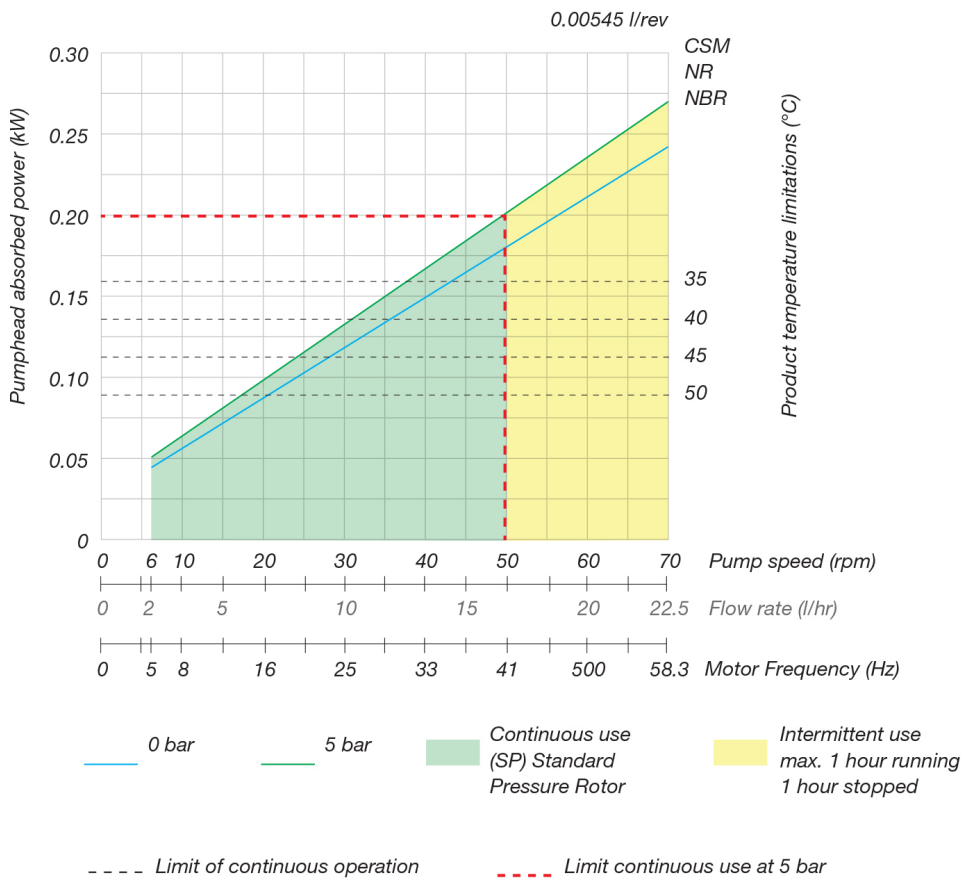

Actual flows will vary according to suction conditions, discharge pressure and normal component production tolerances.

Verderflex

iDura 5

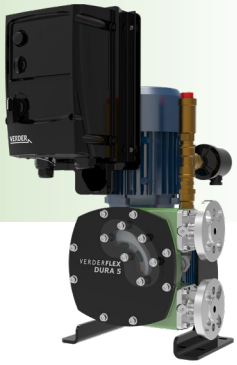

VERDERFLEX®

Dimensions

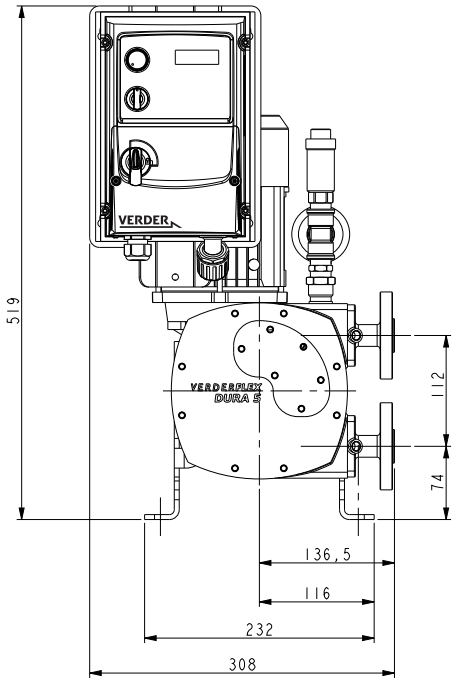

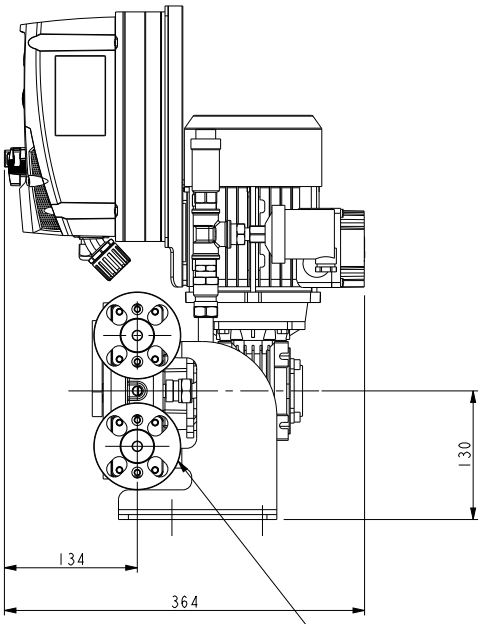

INLET / DISCHARGE
3/8" (10mm) FLANGE OPTIONS
DN10
PN16
ANSI 150lb
JIS 10K
PUMP CAN RUN IN
EITHER DIRECTION

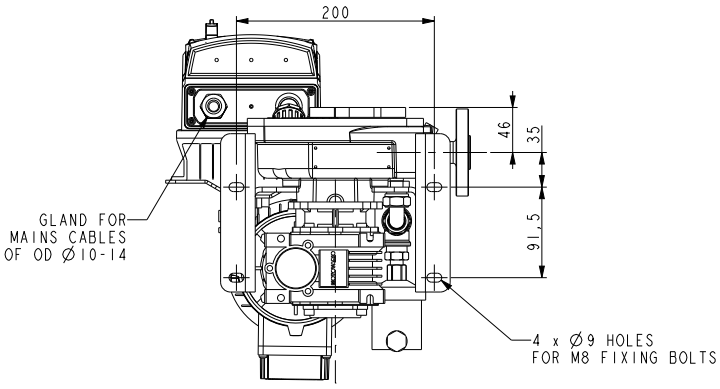

All dimensions are in mm.

All dimensions are for guidance only.

VF_iDura_5_Technosheet_rev01_2020_(eu)

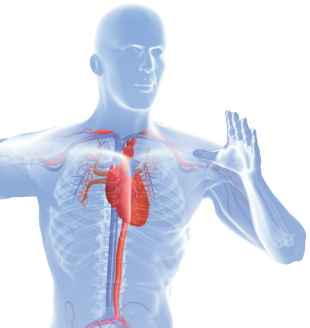

Find your local supplier at www.verderflex.com

For construction, installation and floor mounting drawings please contact your local authorised Verderflex® distributor.

VERDER
passion for pumps