Article no.	Description
2520938	WILO-DRAINLIFT M2 (1~)
2515130	WILO-DRAINLIFT M2 (3~)
2531400	WILO-DRAINLIFT M2/8 (1~) NRV
2531401	WILO-DRAINLIFT M2/8 (3~) NRV
2544837	WILO-DRAINLIFT M2/8 (3~) NRV - S

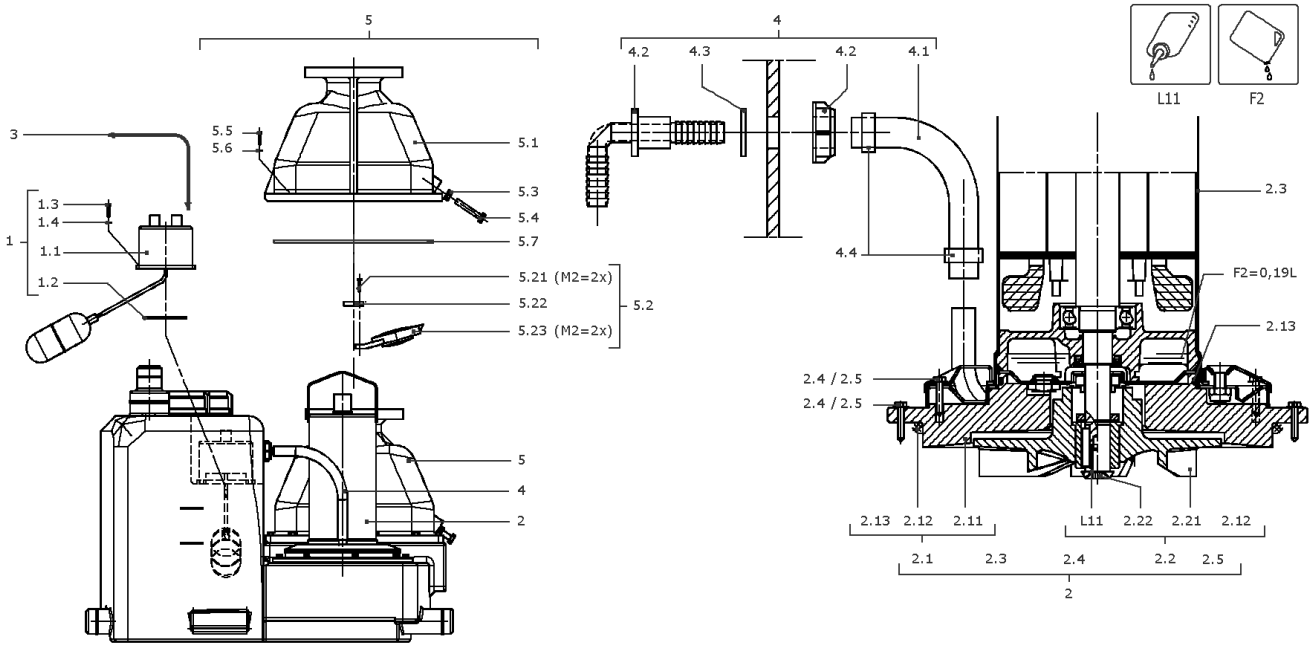
5
4
4.2
4.3
4.2
4.1
L11
F2
3
5.5
5.6
5.1
5.3
5.4
5.7
1.3
1.4
1
1.1
1.2
5.21 (M2=2x)
5.22
5.23 (M2=2x)
5.2
2.3
4.4
F2=0,19L
2.13
2.4 / 2.5
2.4 / 2.5
5
4
2
2.13
2.12
2.11
L11
2.22
2.21
2.12
2.1
2.3
2.4
2.2
2.5
2

Item	Article no.	Description	Quantity
1	2042991	FLOATSWITCH NW16/W-M2 KIT	1
1.1		> FLOATSWITCH NW16/W-M2	1
1.2	2042978	> O-RING ID.93x5 40SR	1
1.3		> HEXAGONAL SCREW DIN7976 6,3X32 A2	1
1.4		> WASHER DIN440 R 6,6 A2A	1
2	2037736	PUMP UNIT DLS 1~230+HOSE VENT.FROM10/01	1
2.1	2037738	> ADAPTER RING DLS+VENTILAT.FROM 10/01 KIT	1
2.11		>> ADAPTERRING DRAINL.S;WITH HOSE CONNECT.	1
2.12	2027539	>> GASKET D.10MM NR GREY	
2.13	2028703	>> O-RING ID.122X4 DIN3771 NBR70	1
2.2	2027540	> IMPELLER DRAINLIFT D.170 KIT	1
2.12	2027539	>> GASKET D.10MM NR GREY	
2.21		>> IMPELLER DRAINLIFT S CPL.	1
2.22	2037743	>> IMPELLER FIXATION DLS/TP65 KIT	1
		>>> WASHER F.LR.F TP65	1
		>>> SCREW M8X20 F.LR.TP65	1
		>>> KEY B5X5X25 DIN6885 INOX 316TI	1
L11	2132529	>>> WEICON LOCK AN306-30 20ML VP.	1
2.3	2027541	> MOTOR CPL. DRAINLIFT S/M 1~230	1
2.4	2027543	> HEXAGONAL SCREW DIN7976 6,3X32 A2 VP.	1
2.5	2027545	> DISC DIN9021 6,4 A2 STAINLESS STEEL VP.	1
	4015653	> MS. MG1/17-G60-Q1Q1PGG-KIT	1
1.11	2048934	>> O-RING-ID.32X2,5 NBR70SR	1
1.31		>> ROTAT.SEALRING MG1/17-G60Q1Q1PGG.BURGMAN	1
1.32		>> CIRCLIP 17X1 DIN471 1.4122	1
1.34		>> RADIAL LIP SEAL-WDR-A-20X32X7-DIN376-NB	1
1.35	2048935	>> O-RING ID.123,42X3,53 NBR 70SR	1
1.35	4006725	>> O-RING ID.132,94x3,53 NBR70SR	1
1.36	4017965	>> O-RING D9,9X2,62 NITRILE 70SH	1
1.37		>> ROND.APPUI-GM-D17/30-EP.4-PP	1
1.38		>> MECHANICAL-SEAL-GUARD-NITRILE	1
		>> medical white oil 1L KIT	1
3	2042979	PROTECTIVE CAP F.FLOATSWITCH DLM	1
4	2037739	AIR EVACUATION PIPE DL FROM10/01 KIT	1

Item	Article no.	Description	Quantity
4.1	2037740	> PCV-HOSE DN16X4 VP.	
4.2	2037741	> VESSEL HOSE CONNECTION 1/2 90° VP.	1
4.3	2027563	> FLAT GASKET 30,7x20x2,5 RUBBER VP.	1
4.4	2027902	> HOSE CLAMP DIN3017-A-16-27X9-C7-W4 VP	1
5	2042992	NON-RETURN FLAP DLM2 KIT	1
5.1		> NON RETURN VALVE HOUSING DLM/DLL	1
5.2	2114279	> RUBBER FLAP DLM2 KIT	1
5.21		>> HEXAGONAL SCREW DIN7976 8,0x45 A2	1
5.22		>> FLAP SHEET DRAINLIFT M/L/XL	1
5.23		>> RUBBER FLAP DN80; DRAINLIFT M/L	1
5.7	2042981	>> FLAT GASKET RV-CASING DRAINLIFT M	1
		>> WASHER A8,4 DIN125 1.4401	1
5.3		> GROMMET NUT SEAL LOCK M10 21x17x9 VG	1
5.4		> SCREW M10x50 DIN933 A4	1
5.5		> SCREW 8,0x45 DIN7976 A2A	1
5.6		> Washer ISO7089-8-200HV ZnNi	1
	2042983	CONNECTION PIECE DN80/100 KIT	1
		> SINLGE ENDED FLANGED NIPPLE DN80/100 PUR	1
		> HOSE 112x6MM; 180MM LONG NBR/CR	1
		> HOSE CLAMP DIN3017A110-130X13-C7-W4	1
		> SCREW M16x65 DIN933 8.8 A2A	1
		> NUT M16 DIN934 8 A2K	1
		> WASHER A17 DIN125 A2A	1
	2028699	> FLAT GASKET DN80;D.90/142X3 NBR70SR.	1
	6070161	W-CTRL-MS-L-2x4kW-M-DOL-S VP.	1
	2087826	PACKING DRAINLIFT M2/L2 VP.	1
F2	6025460	medical white oil 1L KIT	1
L11	2132529	WEICON LOCK AN306-30 20ML VP.	1

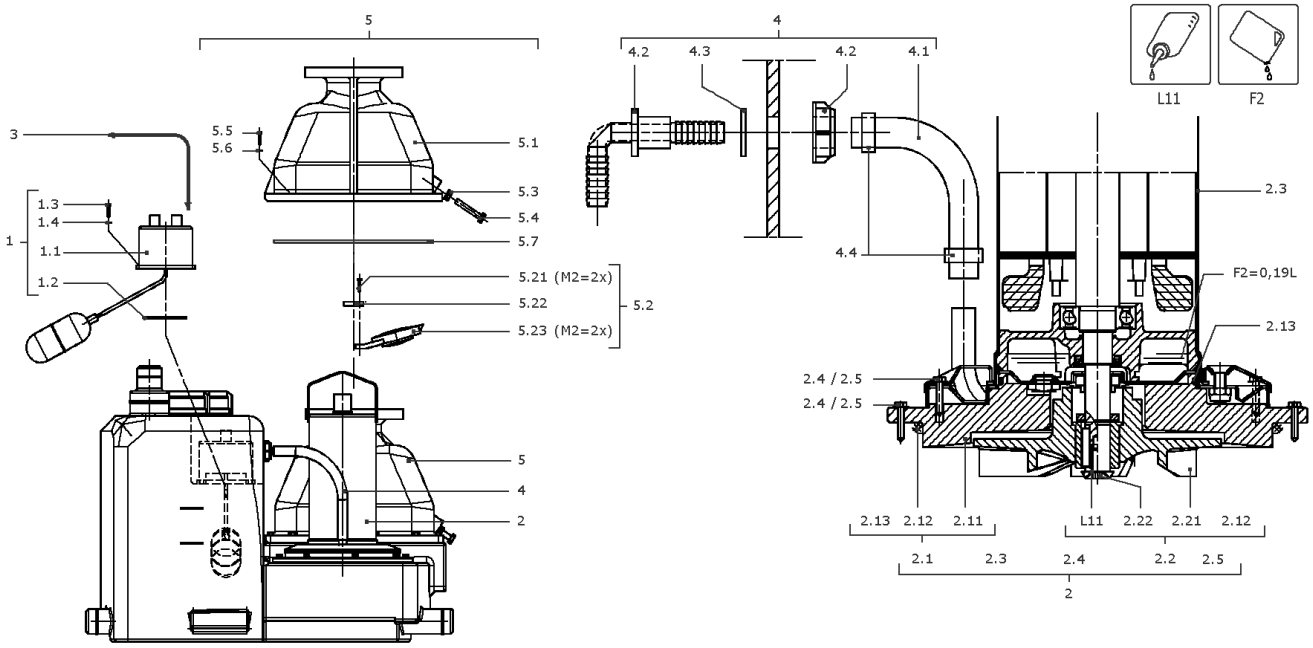
5
4
4.2
4.3
4.2
4.1
L11
F2
3
5.5
5.6
5.1
5.3
5.4
5.7
1.3
1.4
1
1.1
1.2
5.21 (M2=2x)
5.22
5.23 (M2=2x)
5.2
2.3
4.4
F2=0,19L
2.13
2.4 / 2.5
2.4 / 2.5
5
4
2
2.13
2.12
2.11
L11
2.22
2.21
2.12
2.1
2.3
2.4
2.2
2.5
2

Item	Article no.	Description	Quantity
1	2042991	FLOATSWITCH NW16/W-M2 KIT	1
1.1		> FLOATSWITCH NW16/W-M2	1
1.2	2042978	> O-RING ID.93x5 40SR	1
1.3		> HEXAGONAL SCREW DIN7976 6,3X32 A2	1
1.4		> WASHER DIN440 R 6,6 A2A	1
2	2037737	PUMP UNIT DLS 3~400+HOSE VENT.FROM 10/01	1
2.1	2037738	> ADAPTER RING DLS+VENTILAT.FROM 10/01 KIT	1
2.11		>> ADAPTERRING DRAINL.S;WITH HOSE CONNECT.	1
2.12	2027539	>> GASKET D.10MM NR GREY	
2.13	2028703	>> O-RING ID.122X4 DIN3771 NBR70	1
2.2	2027540	> IMPELLER DRAINLIFT D.170 KIT	1
2.12	2027539	>> GASKET D.10MM NR GREY	
2.21		>> IMPELLER DRAINLIFT S CPL.	1
2.22	2037743	>> IMPELLER FIXATION DLS/TP65 KIT	1
		>>> WASHER F.LR.F TP65	1
		>>> SCREW M8X20 F.LR.TP65	1
		>>> KEY B5X5X25 DIN6885 INOX 316TI	1
L11	2132529	>>> WEICON LOCK AN306-30 20ML VP.	1
2.3	2027542	> MOTOR CPL. DRAINLIFT S/M 3~400	1
2.4	2027543	> HEXAGONAL SCREW DIN7976 6,3X32 A2 VP.	1
2.5	2027545	> DISC DIN9021 6,4 A2 STAINLESS STEEL VP.	1
	4015653	> MS. MG1/17-G60-Q1Q1PGG-KIT	1
1.11	2048934	>> O-RING-ID.32X2,5 NBR70SR	1
1.31		>> ROTAT.SEALRING MG1/17-G60Q1Q1PGG.BURGMAN	1
1.32		>> CIRCLIP 17X1 DIN471 1.4122	1
1.34		>> RADIAL LIP SEAL-WDR-A-20X32X7-DIN376-NB	1
1.35	2048935	>> O-RING ID.123,42X3,53 NBR 70SR	1
1.35	4006725	>> O-RING ID.132,94x3,53 NBR70SR	1
1.36	4017965	>> O-RING D9,9X2,62 NITRILE 70SH	1
1.37		>> ROND.APPUI-GM-D17/30-EP.4-PP	1
1.38		>> MECHANICAL-SEAL-GUARD-NITRILE	1
		>> medical white oil 1L KIT	1
3	2042979	PROTECTIVE CAP F.FLOATSWITCH DLM	1
4	2037739	AIR EVACUATION PIPE DL FROM10/01 KIT	1

Item	Article no.	Description	Quantity
4.1	2037740	> PCV-HOSE DN16X4 VP.	
4.2	2037741	> VESSEL HOSE CONNECTION 1/2 90° VP.	1
4.3	2027563	> FLAT GASKET 30,7x20x2,5 RUBBER VP.	1
4.4	2027902	> HOSE CLAMP DIN3017-A-16-27X9-C7-W4 VP	1
5	2042992	NON-RETURN FLAP DLM2 KIT	1
5.1		> NON RETURN VALVE HOUSING DLM/DLL	1
5.2	2114279	> RUBBER FLAP DLM2 KIT	1
5.21		>> HEXAGONAL SCREW DIN7976 8,0x45 A2	1
5.22		>> FLAP SHEET DRAINLIFT M/L/XL	1
5.23		>> RUBBER FLAP DN80; DRAINLIFT M/L	1
5.7	2042981	>> FLAT GASKET RV-CASING DRAINLIFT M	1
		>> WASHER A8,4 DIN125 1.4401	1
5.3		> GROMMET NUT SEAL LOCK M10 21x17x9 VG	1
5.4		> SCREW M10x50 DIN933 A4	1
5.5		> SCREW 8,0x45 DIN7976 A2A	1
5.6		> Washer ISO7089-8-200HV ZnNi	1
	2042983	CONNECTION PIECE DN80/100 KIT	1
		> SINLGE ENDED FLANGED NIPPLE DN80/100 PUR	1
		> HOSE 112x6MM; 180MM LONG NBR/CR	1
		> HOSE CLAMP DIN3017A110-130X13-C7-W4	1
		> SCREW M16x65 DIN933 8.8 A2A	1
		> NUT M16 DIN934 8 A2K	1
		> WASHER A17 DIN125 A2A	1
	2028699	> FLAT GASKET DN80;D.90/142X3 NBR70SR.	1
	6070162	W-CTRL-MS-L-2x4kW-T4-DOL-S VP.	1
	2087826	PACKING DRAINLIFT M2/L2 VP.	1
F2	6025460	medical white oil 1L KIT	1
L11	2132529	WEICON LOCK AN306-30 20ML VP.	1

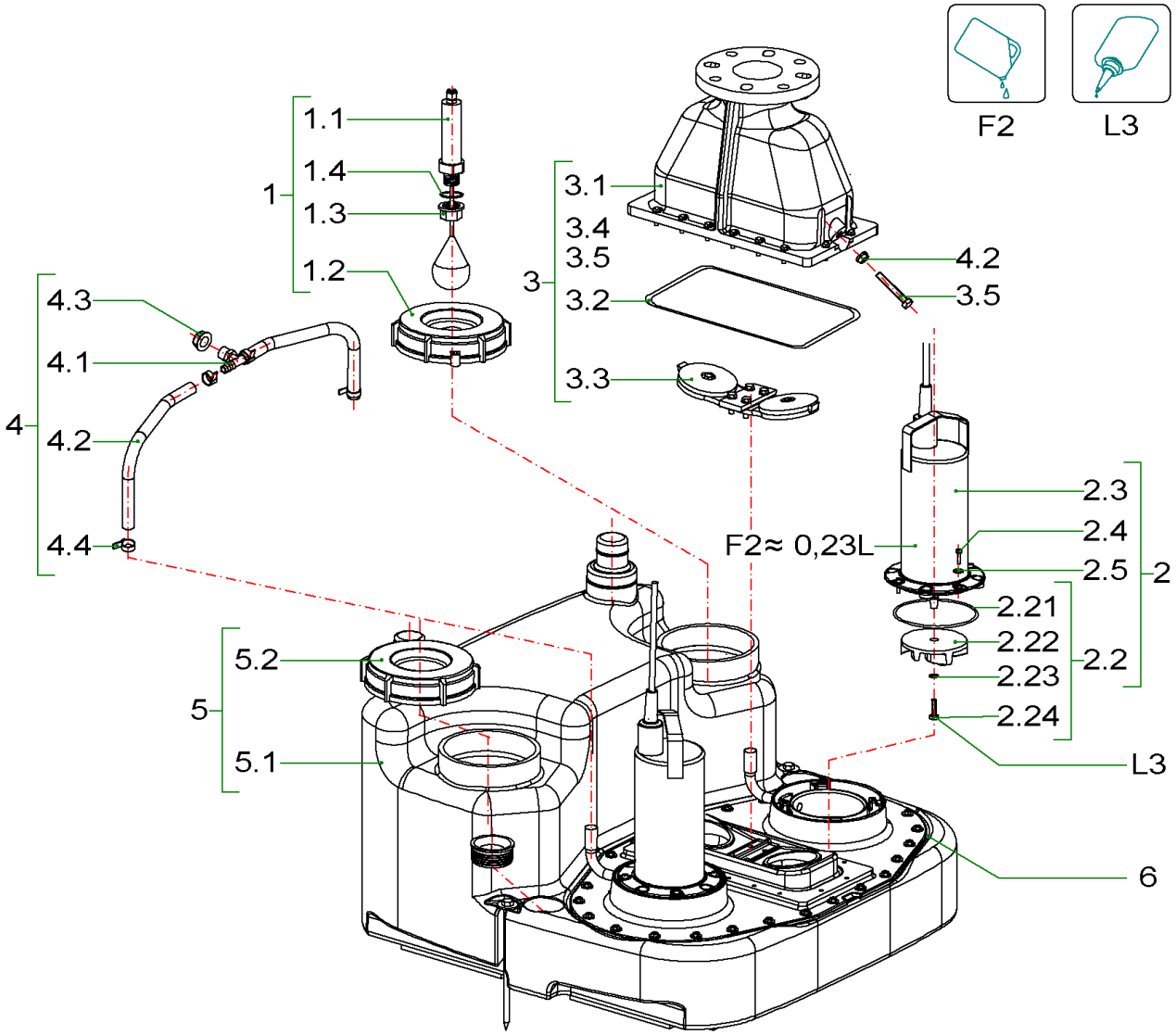
F2
L3
1
1.1
1.4
1.3
1.2
3
3.1
3.4
3.5
3.2
3.3
4.2
3.5
4
4.3
4.1
4.2
4.4
F2≈ 0,23L
2.3
2.4
2.5
2
2.21
2.22
2.23
2.24
2.2
5
5.2
5.1
L3
6

Item	Article no.	Description	Quantity
F2	6025460	medical white oil 1L KIT	1
L3	2096167	Loctite 243 50ml VP.	1
1	2107661	LEVEL CONTROLER M2/8 KIT	1
1.1		> FLOAT SWITCH SR 802 (WILO)	1
1.2	2096403	> COVER F.LEVEL CONTROLLER M1/8 VP.	1
1.3	2096404	> LOCK NUT 1/2"PP VP.	1
1.4	2027563	> FLAT GASKET 30,7x20x2,5 RUBBER VP.	1
2	2094620	PUMP UNIT DRAINLIFT M1/8 (1~) KIT	1
2.2	2094622	> IMPELLER DRAINLIFT M1/8 KIT	1
2.21	6078829	>> o-ring ID.108,0x5,0 NBR50 VP.	1
2.22		>> IMPELLER DRAINLIFT M/8 PUR	1
2.23	2096407	>> SCREW LOCKING NORD-LOCK 10,8/6,5 VP.	1
2.24	2064590	>> SCREW M6X16 DIN912 A4 (4 PIECES)	1
2.3		> MOTOR 1,1KW-EM-230V CPL.	1
2.4	2048853	> SCREW M5X12 ISO4762 A2	1
2.5	2048852	> WASHER A5,3 DIN-EN-ISO7093 A2 VP.	1
	4032904	> MECHANICAL SEAL MG1S2/14G61 Q1Q1PGG KIT	1
1.11		>> O-RING-ID.32X2,5 NBR70SR	1
1.31		>> MG1S2/14G61Q1Q1PGG-GAR.BURGMA	1
1.32		>> CIRCLIP-FOR-SHAFT-D14X1-STAINLESS-1.4122	1
1.33	57912	>> O-RING-104,37X3,53-PB701	1
1.34		>> A SHAPED LIP SEAL 14X30X7 DIN3760 NB	1
1.35		>> PROTECTING RING BEARING SEWAGE PUMP	1
	4017965	>> O-RING D9,9X2,62 NITRILE 70SH	1
		>> MECHANICAL SEAL GUARD D14 THRICHNES.5.75	1
3	2107664	NON RETURN VALVE DLM2/8 KIT	1
3.1		> NON RETURN VALVE HOUSING DLM2/8 KPL.	1
	2107668	> RUBBER FLAP DLM2/8 KIT	1
3.2	2107667	>> O-RING ID.235X8,0 NBR 70 SH A VP.	1
3.3		>> ASS. RUBBER FLAP DLM2/8	1
3.4		> GROMMET NUT SEAL LOCK M10 21x17x9 VG	1
3.5		> SCREW M10x50 DIN933 A4	1
4	2107662	AIR EVACUATION DRAINLIFT M2/8 KIT	1
4.1	2107663	> T-IRON R1/2"xD16 PP VP.	1

Item	Article no.	Description	Quantity
4.2	2037741	> VESSEL HOSE CONNECTION 1/2 90° VP.	1
4.3	2096404	> LOCK NUT 1/2"PP VP.	1
4.4	2027902	> HOSE CLAMP DIN3017-A-16-27X9-C7-W4 VP	1
5	2107660	TANK M2/8 VP.	1
5.1		> VESSEL M2/8 PE BLACK 8MM WITHOUT COVER	1
5.2	2067856	> COVER TR165X13 DRAINLIFT M/S VP.	1
6	6220263	TEROSTAT-VII D.12MM white 2m VP.	1
	6070161	W-CTRL-MS-L-2x4kW-M-DOL-S VP.	1
	2107666	PACKING DRAINLIFT M2/8 KIT	1
		> INFLOW GASKET DN100	1
Note: accessories see price list /Zubehörsiehe Preisliste /accessoires voir la			
	2132618	> FIXING PACKING DRAINLIFT M2/8 KIT	1
		>> SCREW 10x220 DIN571 A2K	1
		>> PEG S12W PLASTICS (FISCHER)	1
		>> WASHER R/FZ 13,5 DIN440 hot galvanized	1
	2027553	> DAMMING PROTECTIVE STRIP DRAINLIFT	1
	2132619	> TEXTILE-HOSE/HOSE CLAMP DN50 KIT	1
		>> PVC-TEXTILE-HOSE DN50X5X120 TRANSP.	1
		>> HOSE CLAMP DIN3017-A-50-70X13-C7-W4	1
	2027552	> MANSCHETTE DN70 KONFIX	1
	2127362	> LIP GASKET 50/68 SBR 50Sh VP.	1
	2042983	> CONNECTION PIECE DN80/100 KIT	1
		>> SINLGE ENDED FLANGED NIPPLE DN80/100 PUR	1
		>> HOSE 112x6MM; 180MM LONG NBR/CR	1
		>> HOSE CLAMP DIN3017A110-130X13-C7-W4	1
		>> SCREW M16x65 DIN933 8.8 A2A	1
		>> NUT M16 DIN934 8 A2K	1
		>> WASHER A17 DIN125 A2A	1
	2028699	>> FLAT GASKET DN80;D.90/142X3 NBR70SR.	1

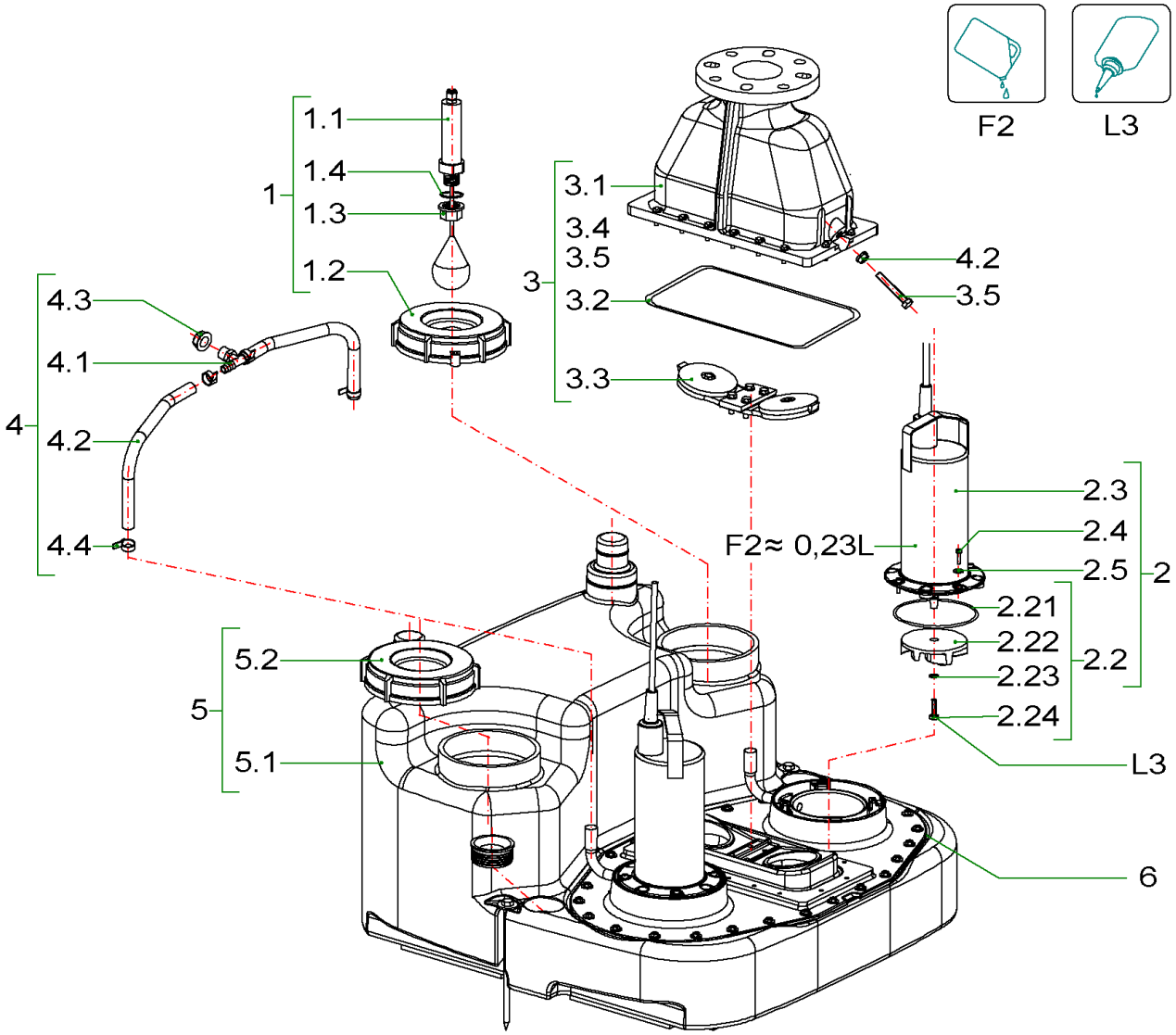
F2
L3
1
1.1
1.4
1.3
1.2
3
3.1
3.4
3.5
3.2
3.3
4.2
3.5
4
4.3
4.1
4.2
4.4
F2≈ 0,23L
2.3
2.4
2.5
2
2.21
2.22
2.23
2.24
2.2
5
5.2
5.1
L3
6

Item	Article no.	Description	Quantity
F2	6025460	medical white oil 1L KIT	1
L3	2096167	Loctite 243 50ml VP.	1
1	2107661	LEVEL CONTROLER M2/8 KIT	1
1.1		> FLOAT SWITCH SR 802 (WILO)	1
1.2	2096403	> COVER F.LEVEL CONTROLLER M1/8 VP.	1
1.3	2096404	> LOCK NUT 1/2"PP VP.	1
1.4	2027563	> FLAT GASKET 30,7x20x2,5 RUBBER VP.	1
2	2094621	PUMP UNIT DRAINLIFT M1/8 (3~) KIT	1
2.2	2094622	> IMPELLER DRAINLIFT M1/8 KIT	1
2.21	6078829	>> o-ring ID.108,0x5,0 NBR50 VP.	1
2.22		>> IMPELLER DRAINLIFT M/8 PUR	1
2.23	2096407	>> SCREW LOCKING NORD-LOCK 10,8/6,5 VP.	1
2.24	2064590	>> SCREW M6X16 DIN912 A4 (4 PIECES)	1
2.3		> MOTOR 1,1KW-DM-400V CPL.	1
2.4	2048853	> SCREW M5X12 ISO4762 A2	1
2.5	2048852	> WASHER A5,3 DIN-EN-ISO7093 A2 VP.	1
	4032904	> MECHANICAL SEAL MG1S2/14G61 Q1Q1PGG KIT	1
1.11		>> O-RING-ID.32X2,5 NBR70SR	1
1.31		>> MG1S2/14G61Q1Q1PGG-GAR.BURGMA	1
1.32		>> CIRCLIP-FOR-SHAFT-D14X1-STAINLESS-1.4122	1
1.33	57912	>> O-RING-104,37X3,53-PB701	1
1.34		>> A SHAPED LIP SEAL 14X30X7 DIN3760 NB	1
1.35		>> PROTECTING RING BEARING SEWAGE PUMP	1
	4017965	>> O-RING D9,9X2,62 NITRILE 70SH	1
		>> MECHANICAL SEAL GUARD D14 THRICHNES.5.75	1
3	2107664	NON RETURN VALVE DLM2/8 KIT	1
3.1		> NON RETURN VALVE HOUSING DLM2/8 KPL.	1
	2107668	> RUBBER FLAP DLM2/8 KIT	1
3.2	2107667	>> O-RING ID.235X8,0 NBR 70 SH A VP.	1
3.3		>> ASS. RUBBER FLAP DLM2/8	1
3.4		> GROMMET NUT SEAL LOCK M10 21x17x9 VG	1
3.5		> SCREW M10x50 DIN933 A4	1
4	2107662	AIR EVACUATION DRAINLIFT M2/8 KIT	1
4.1	2107663	> T-IRON R1/2"xD16 PP VP.	1

Item	Article no.	Description	Quantity
4.2	2037741	> VESSEL HOSE CONNECTION 1/2 90° VP.	1
4.3	2096404	> LOCK NUT 1/2"PP VP.	1
4.4	2027902	> HOSE CLAMP DIN3017-A-16-27X9-C7-W4 VP	1
5	2107660	TANK M2/8 VP.	1
5.1		> VESSEL M2/8 PE BLACK 8MM WITHOUT COVER	1
5.2	2067856	> COVER TR165X13 DRAINLIFT M/S VP.	1
6	6220263	TEROSTAT-VII D.12MM white 2m VP.	1
	6070162	W-CTRL-MS-L-2x4kW-T4-DOL-S VP.	1
	2107666	PACKING DRAINLIFT M2/8 KIT	1
		> INFLOW GASKET DN100	1
Note: accessories see price list /Zubehörsiehe Preisliste /accessoires voir la			
	2132618	> FIXING PACKING DRAINLIFT M2/8 KIT	1
		>> SCREW 10x220 DIN571 A2K	1
		>> PEG S12W PLASTICS (FISCHER)	1
		>> WASHER R/FZ 13,5 DIN440 hot galvanized	1
	2027553	> DAMMING PROTECTIVE STRIP DRAINLIFT	1
	2132619	> TEXTILE-HOSE/HOSE CLAMP DN50 KIT	1
		>> PVC-TEXTILE-HOSE DN50X5X120 TRANSP.	1
		>> HOSE CLAMP DIN3017-A-50-70X13-C7-W4	1
	2027552	> MANSCHETTE DN70 KONFIX	1
	2127362	> LIP GASKET 50/68 SBR 50Sh VP.	1
	2042983	> CONNECTION PIECE DN80/100 KIT	1
		>> SINLGE ENDED FLANGED NIPPLE DN80/100 PUR	1
		>> HOSE 112x6MM; 180MM LONG NBR/CR	1
		>> HOSE CLAMP DIN3017A110-130X13-C7-W4	1
		>> SCREW M16x65 DIN933 8.8 A2A	1
		>> NUT M16 DIN934 8 A2K	1
		>> WASHER A17 DIN125 A2A	1
	2028699	>> FLAT GASKET DN80;D.90/142X3 NBR70SR.	1

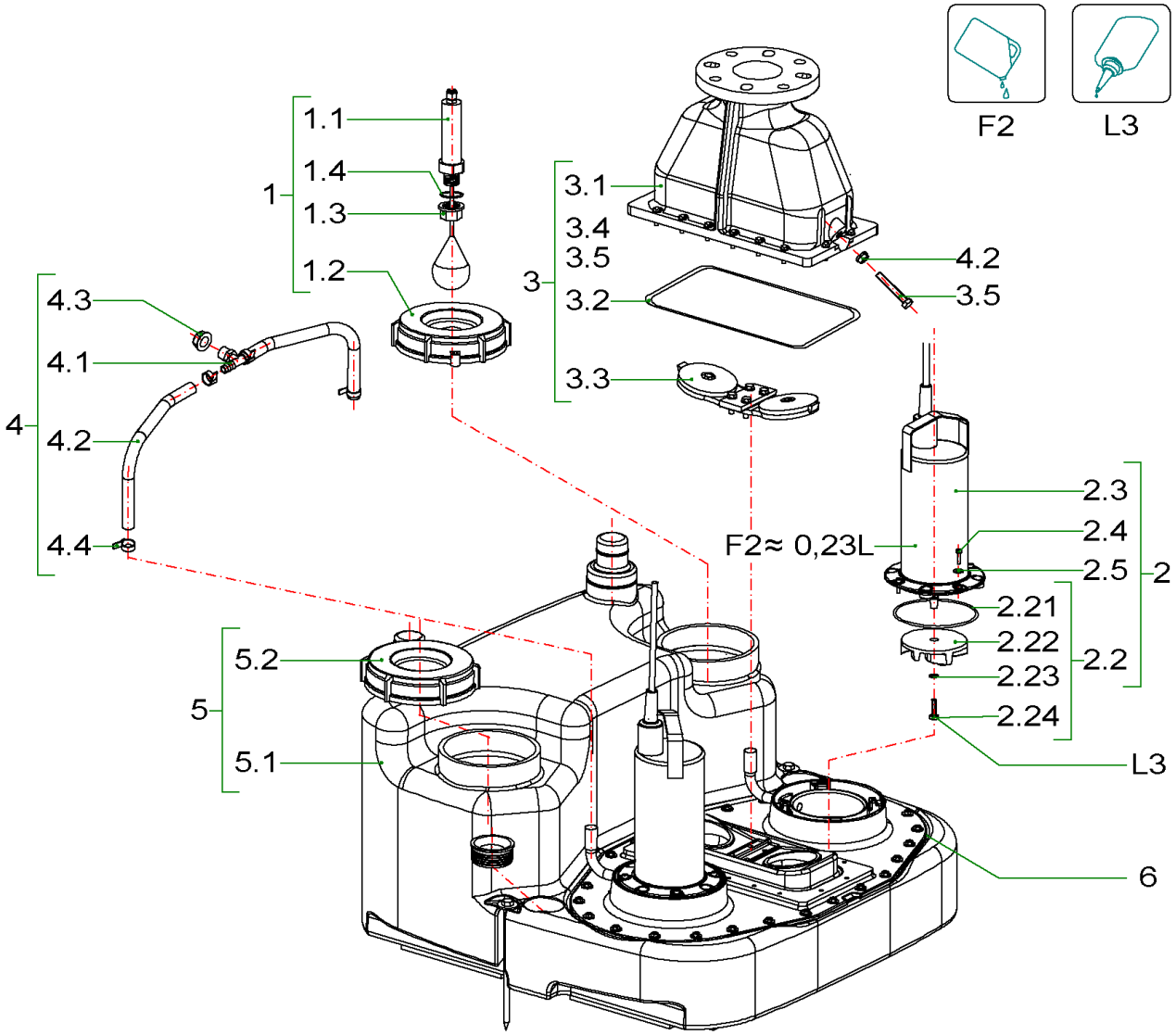
F2
L3
1.1
1.4
1.3
1.2
1
3.1
3.4
3.5
3.2
3.3
3
4.2
3.5
4.3
4.1
4.2
4.4
4
2.3
2.4
2.5
2
F2≈ 0,23L
2.21
2.22
2.23
2.24
2.2
5.2
5.1
5
L3
6

Item	Article no.	Description	Quantity
F2	6025460	medical white oil 1L KIT	1
L3	2096167	Loctite 243 50ml VP.	1
1	2107661	LEVEL CONTROLER M2/8 KIT	1
1.1		> FLOAT SWITCH SR 802 (WILO)	1
1.2	2096403	> COVER F.LEVEL CONTROLLER M1/8 VP.	1
1.3	2096404	> LOCK NUT 1/2"PP VP.	1
1.4	2027563	> FLAT GASKET 30,7x20x2,5 RUBBER VP.	1
2	2094621	PUMP UNIT DRAINLIFT M1/8 (3~) KIT	1
2.2	2094622	> IMPELLER DRAINLIFT M1/8 KIT	1
2.21	6078829	>> o-ring ID.108,0x5,0 NBR50 VP.	1
2.22		>> IMPELLER DRAINLIFT M/8 PUR	1
2.23	2096407	>> SCREW LOCKING NORD-LOCK 10,8/6,5 VP.	1
2.24	2064590	>> SCREW M6X16 DIN912 A4 (4 PIECES)	1
2.3		> MOTOR 1,1KW-DM-400V CPL.	1
2.4	2048853	> SCREW M5X12 ISO4762 A2	1
2.5	2048852	> WASHER A5,3 DIN-EN-ISO7093 A2 VP.	1
	4032904	> MECHANICAL SEAL MG1S2/14G61 Q1Q1PGG KIT	1
1.11		>> O-RING-ID.32X2,5 NBR70SR	1
1.31		>> MG1S2/14G61Q1Q1PGG-GAR.BURGMA	1
1.32		>> CIRCLIP-FOR-SHAFT-D14X1-STAINLESS-1.4122	1
1.33	57912	>> O-RING-104,37X3,53-PB701	1
1.34		>> A SHAPED LIP SEAL 14X30X7 DIN3760 NB	1
1.35		>> PROTECTING RING BEARING SEWAGE PUMP	1
	4017965	>> O-RING D9,9X2,62 NITRILE 70SH	1
		>> MECHANICAL SEAL GUARD D14 THRICHNES.5.75	1
3	2107664	NON RETURN VALVE DLM2/8 KIT	1
3.1		> NON RETURN VALVE HOUSING DLM2/8 KPL.	1
	2107668	> RUBBER FLAP DLM2/8 KIT	1
3.2	2107667	>> O-RING ID.235X8,0 NBR 70 SH A VP.	1
3.3		>> ASS. RUBBER FLAP DLM2/8	1
3.4		> GROMMET NUT SEAL LOCK M10 21x17x9 VG	1
3.5		> SCREW M10x50 DIN933 A4	1
4	2107662	AIR EVACUATION DRAINLIFT M2/8 KIT	1
4.1	2107663	> T-IRON R1/2"xD16 PP VP.	1

Item	Article no.	Description	Quantity
4.2	2037741	> VESSEL HOSE CONNECTION 1/2 90° VP.	1
4.3	2096404	> LOCK NUT 1/2"PP VP.	1
4.4	2027902	> HOSE CLAMP DIN3017-A-16-27X9-C7-W4 VP	1
5	2107660	TANK M2/8 VP.	1
5.1		> VESSEL M2/8 PE BLACK 8MM WITHOUT COVER	1
5.2	2067856	> COVER TR165X13 DRAINLIFT M/S VP.	1
6	6220263	TEROSTAT-VII D.12MM white 2m VP.	1
	2107666	PACKING DRAINLIFT M2/8 KIT	1
		> INFLOW GASKET DN100	1
Note: accessories see price list /Zubehörsiehe Preisliste /accessoires voir la			
	2132618	> FIXING PACKING DRAINLIFT M2/8 KIT	1
		>> SCREW 10x220 DIN571 A2K	1
		>> PEG S12W PLASTICS (FISCHER)	1
		>> WASHER R/FZ 13,5 DIN440 hot galvanized	1
	2027553	> DAMMING PROTECTIVE STRIP DRAINLIFT	1
	2132619	> TEXTILE-HOSE/HOSE CLAMP DN50 KIT	1
		>> PVC-TEXTILE-HOSE DN50X5X120 TRANSP.	1
		>> HOSE CLAMP DIN3017-A-50-70X13-C7-W4	1
	2027552	> MANSCHETTE DN70 KONFIX	1
	2127362	> LIP GASKET 50/68 SBR 50Sh VP.	1
	2042983	> CONNECTION PIECE DN80/100 KIT	1
		>> SINLGE ENDED FLANGED NIPPLE DN80/100 PUR	1
		>> HOSE 112x6MM; 180MM LONG NBR/CR	1
		>> HOSE CLAMP DIN3017A110-130X13-C7-W4	1
		>> SCREW M16x65 DIN933 8.8 A2A	1
		>> NUT M16 DIN934 8 A2K	1
		>> WASHER A17 DIN125 A2A	1
	2028699	>> FLAT GASKET DN80;D.90/142X3 NBR70SR.	1