SUBMERSIBLE
DEWATERING PUMP

DIVA 10~30HP

SERIES 50HZ

Features

- Double mechanical seal SIC/SIC with SIC/SIC in oil bath
- Heavy-duty with drainage mode
- Protected with Yamada overload protector
- Top flange discharge with semi-circumferential cooling for continuous duty

Applications

- Lime slurries
- Mill scale
- Coal runoff sumps
- Wash down sumps
- Mining
- Tunneling
- Quarries

Specifications

Liquid Temperature		0~40˚C (32~104˚F)
Submersible depth		20M
Motor Part	Frequency	50Hz
	Pole	4 Pole
	Type	Dry Type
	Insulation	Class F
	Protection	IP 68
Pump Part	Protector	Auto-Cut
	Bearing	Ball Type
	Mechanical seal	Double Mechanical Seal
	Impeller	Semi-open Impeller

Data Chart

Type	Output		Discharge	F.L.A.	Rated		Maximum		Free Passage	Weight(W/O Cable)
	HP	kW	Inch	3ø 400V	Head M	Cap. LPM	Head M	Cap. LPM	mm	kg
100(150)DIVA-5.100	10	7.5	4"(6")	16A	13	1500	19	2800	20	150
100(150)DIVA-5.150	15	11	4"(6")	22A	15	2000	22	3700	20	175
150(200)DIVA-5.200	20	15	6"(8")	31.9A	15	4000	22	6200	25	250
150(200)DIVA-5.240	24	18	6"(8")	35.5A	21	3000	29	5000	25	360
150(200)DIVA-5.300	30	22	6"(8")	44.6A	20	3800	35	5200	25	390
200DIVA-5.300L	30	22	8"	44.6A	15	4900	26	6000	25	400

Performance Curve

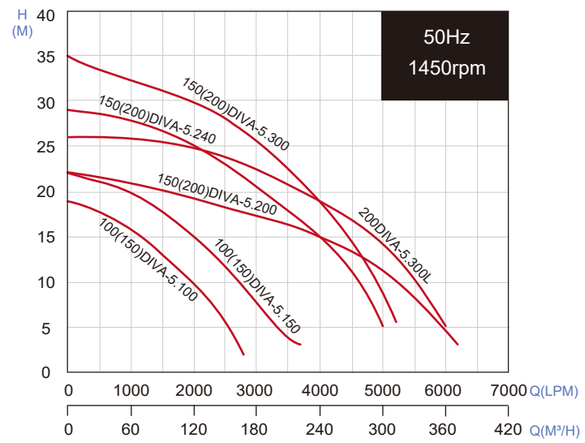

All technical information is subject to change without notice.

High Chrome Steel
Semi-open Impeller

Agitator (Optional)
EN-GJS-500

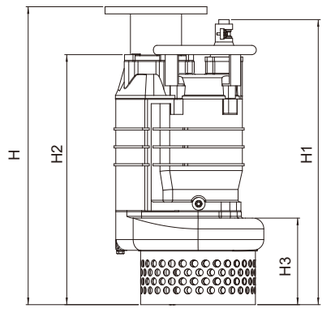

100(150)DIVA-5.100~5.150

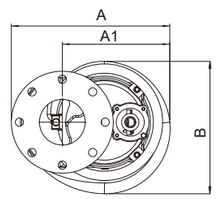

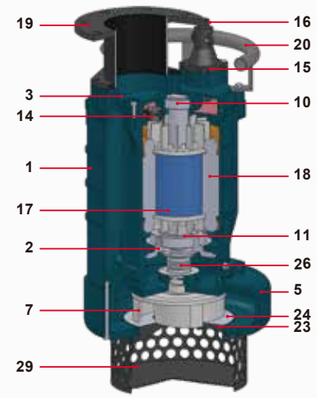

Parts and Material List

No.	Part	Material
1	Motor Frame	EN-GJL-200
2	Bearing Bracket	EN-GJL-200
3	Top Bracket	EN-GJL-200
5	Pump Casing	EN-GJL-200
7	Impeller	High Chrome Steel
10	Upper Bearing	NTN/TPI
11	Lower Bearing	NTN/TPI
14	Protector	YAMADA
15	Gland Holder	EN-GJL-200
16	Cable Gland	NBR
17	Shaft with Rotor	10~15HP: AISI 410
		20~30HP: AISI 420
18	Stator	
19	Discharge	SC
20	Handle	SC
23	Suction Plate	10~20HP: High Chrome Steel
		30HP: EN-GJL-200
24	Wearing Plate (30HP Only)	High Chrome Steel
26	Mechanical Seal	Upper:SIC/SIC ; Lower:SIC/SIC
29	Strainer	SC

TPI is a family brand of NTN group.

Dimensions (mm)

Type	A	A1	B	H	H1	H2	H3
100(150)DIVA-5.100	445	305	370	790	750	655	242
100(150)DIVA-5.150	445	305	370	790	750	655	242
150(200)DIVA-5.200	515	350	455	970	940	830	282
150(200)DIVA-5.240	615	445	530	1154	1160	1025	345
150(200)DIVA-5.300	615	445	530	1154	1160	1025	345
200DIVA-5.300L	615	445	530	1154	1160	1025	345