Bravo 300

Electrical submersible slurry pump

grindex

www.grindex.com

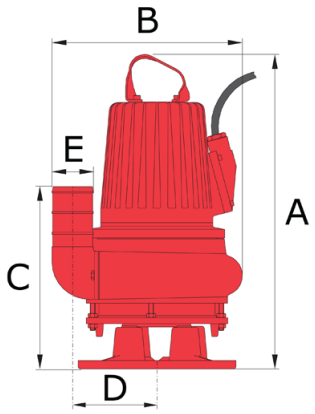

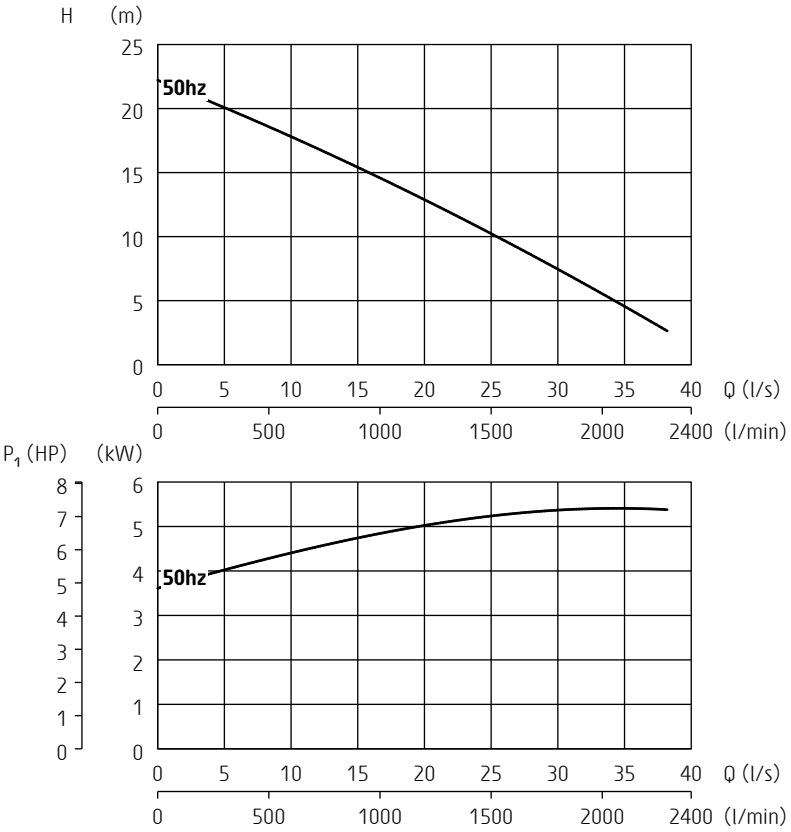

50 Hz	Bravo 300
Discharge connection E	4´´
Rated power P_2	5.9
Max. power consumption P_1	7.1
Shaft speed	1450
Rated current at 230V	21 A
Rated current at 400V	12 A
Rated current at 500V	9.5 A
Solids passage	50 mm
Dimensions A / B / C / D	760 / 460 /440/157 mm
Weight	157 kg

Other voltages on request

ISO 9906/A

General description
Submersible pump for pumping water containing abrasive particles, ground water, slurries

Classification
Electrical submersible slurry pump
Protection class: IP 68

Electrical motor
Squirrel cage induction motor
Insulation class: H (IEC 85), DOL or star/delta

Motor protection
Thermoswitches in motor windings
This pump must be used with external motor protection in accordance with technical data

Cable - SubCab 20 m (66 ft)
DOL: 4x2.5mm² + 2x1.5mm²
Y/D: 7x2.5mm² + 2x1.5mm²

Shaft seals
Double mechanical seal running in an oil compartment
Material lower seal: tungsten carbide - tungsten carbide
Material upperr seal: tungsten carbide - aluminium oxide

Materials
Drive unit: *Cast iron*
Pump housing: *Cast iron*
Impeller: Hard-IronTM
Discharge connection: *Cast iron*
Wear plate: *Nitrile rubber*
Lifting handle: *Galvanized steel*
Shaft: *Stainless steel*
Studs, screws and nuts: *Stainless steel*
O-rings: *Nitrile rubber*

Limitations
Max. submersion depth: 20 m (66 ft)
Max. liquid temperature: 40 °C (104 °F)
Allowed pH range: 5.5 - 14

Specifications can be changed without notice