T·T PUMPS

Horizontal Chopper Centrifugals Pumps

"PTO 80K"
"PTF 80K" SERIES

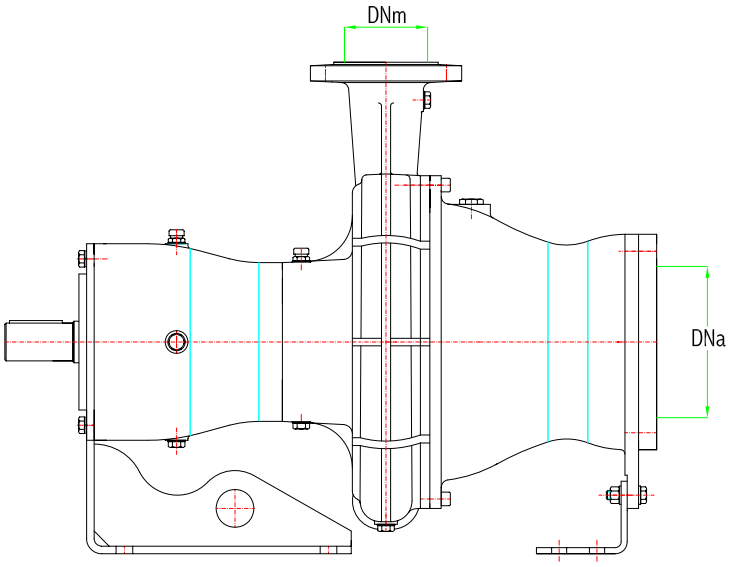

"PTO 80K"

PUMPS FOR DIESEL ENGINES AND ELECTRIC MOTORS CONNECTED BY FLEXIBLE COUPLING

"PTF 80K"

- With flange SAE3 - "PTF3 - 80K"
- With flange SAE4 - "PTF4 - 80K"

Availables flanges SAE3 - SAE4

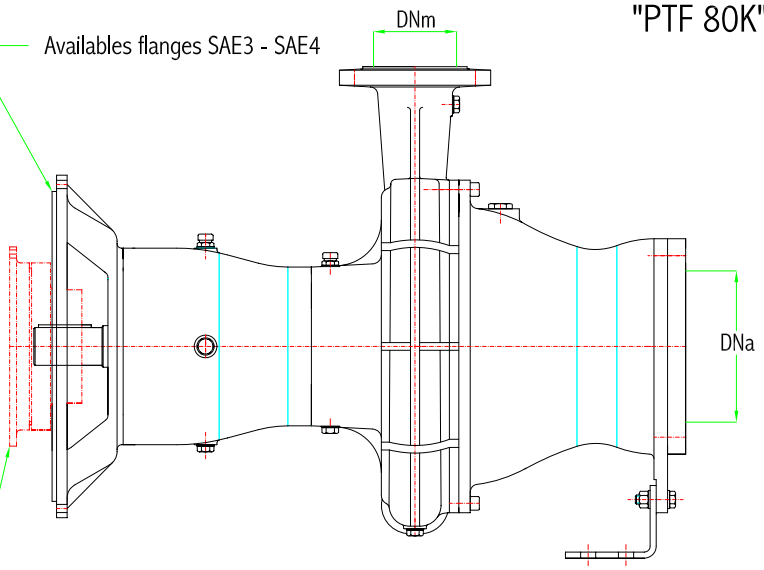

PUMPS DIRECTLY FLANGED TO THE FLYWHEELS OF DIESEL ENGINE WITH STANDARD "SAE" HOUSING

Flexible coupling supplied on demand.Flywheel size must be specified

OPERATING DATA

PUMP TYPE	Inlet x Outlet	R.P.M. Pump	Impeller		CAPACITY m³/h															
					0	48	60	72	84	96	108	120	132	144	156	168	180	210	240	270
					CAPACITY l/min															
					0	800	1000	1200	1400	1600	1800	2000	2200	2400	2600	2800	3000	3500	4000	4500
	DNa x DNm	n			(H) HEAD m															
PTO 80K PTF3 - 80K PTF4 - 80K	150 x 80	1450	A	H	50	48.2	46.8	45	43	40.5	37.7	34.3	30.7	26.6	22.2					
				CV	9.3	15.4	17.2	19.1	20	22.2	23.5	24.6	25.4	26.2	26.6					
		1750	A	H	72.8	71.2	70	68.2	66.2	63.9	61.1	58	54.3	50	46	41.2	36			
				CV	16.3	25	27.5	30.1	32.9	35.5	37.8	39.8	41.6	43.1	44.4	45.5	46.3			
		2000	A	H	95	93.7	92.5	90.9	88.9	86.6	83.8	80.8	77.4	73.5	69	64.2	59.2	45		
				CV	24.3	35.5	38.7	41.9	45.4	49	52.5	55.6	58.3	60.8	63	65	66.5	69.5		
		2200	A	H	115	113.8	112.6	111	109	107	104.2	101	97.8	94.2	90	85.6	80	65.8	49.2	
				CV	34.4	45.8	49.6	53.5	57.6	61.8	66.2	70.3	74	77.3	80	83.1	85.5	90.2	93.4	
		2400	A	H	137	135.8	134.7	133.2	131.4	129	126.5	123.4	120	116	112	107.5	102.7	88.4	72	53
				CV	42.1	57.9	62.3	66.8	71.6	76.5	81.6	87	91.7	96	100	103.7	107	113.6	118.6	122

CV = Absorbed power in HP