wilo
wilo
wilo

| Article no. | Description |
|---|---|
| 2541584 | SiBoost Smart 2HELIX VE204 |
| 2541585 | SiBoost Smart 2HELIX VE206 |
| 2541586 | SiBoost Smart 2HELIX VE208 |
| 2541587 | SiBoost Smart 2HELIX VE211 |
| 2537330 | SiBoost Smart 2HELIX VE403 |
| 2537358 | SiBoost Smart 2HELIX VE404 |
| 2537620 | SiBoost Smart 2HELIX VE405 |
| 2537331 | SiBoost Smart 2HELIX VE407 |
| 2537621 | SiBoost Smart 2HELIX VE410 |
| 2537332 | SiBoost Smart 2HELIX VE602 |
| 2536372 | SiBoost Smart 2HELIX VE603 |
| 2537333 | SiBoost Smart 2HELIX VE604 |
| 2536373 | SiBoost Smart 2HELIX VE606 |
| 2537334 | SiBoost Smart 2HELIX VE608 |
| 2536374 | SiBoost Smart 2HELIX VE611 |
| 2536345 | SiBoost Smart 2HELIX VE1002 |
| 2537335 | SiBoost Smart 2HELIX VE1003 |
| 2536346 | SiBoost Smart 2HELIX VE1004 |
| 2537336 | SiBoost Smart 2HELIX VE1005 |
| 2536347 | SiBoost Smart 2HELIX VE1006 |
| 2536348 | SiBoost Smart 2HELIX VE1009 |
| 2536333 | SiBoost Smart 2HELIX VE1602 |
| 2537337 | SiBoost Smart 2HELIX VE1603/3kW |
| 2536334 | SiBoost Smart 2HELIX VE1603/4kW |
| 2536335 | SiBoost Smart 2HELIX VE1605 |
| 2536336 | SiBoost Smart 2HELIX VE1606 |
| 2540937 | SiBoost Smart 2HELIX VE2202/3kW |
| 2540901 | SiBoost Smart 2HELIX VE2202/4kW |
| 2540902 | SiBoost Smart 2HELIX VE2203 |
| 2540903 | SiBoost Smart 2HELIX VE2204 |
| 2540904 | SiBoost Smart 2HELIX VE2205 |
| 2540913 | SiBoost Smart 2HELIX VE3602/5,5kW |
| 2540914 | SiBoost Smart 2HELIX VE3602/7,5kW |
| 2540915 | SiBoost Smart 2HELIX VE3604 |

| Article no. | Description |
|---|---|
| 2540916 | SiBoost Smart 2HELIX VE3605 |
| 2540925 | SiBoost Smart 2HELIX VE5202 |
| 2540926 | SiBoost Smart 2HELIX VE5203 |
| 2540927 | SiBoost Smart 2HELIX VE5204 |
| 2540928 | SiBoost Smart 2HELIX VE5205 |
| 2541588 | SiBoost Smart 3HELIX VE204 |
| 2541589 | SiBoost Smart 3HELIX VE206 |
| 2541590 | SiBoost Smart 3HELIX VE208 |
| 2541591 | SiBoost Smart 3HELIX VE211 |
| 2537338 | SiBoost Smart 3HELIX VE403 |
| 2537359 | SiBoost Smart 3HELIX VE404 |
| 2537622 | SiBoost Smart 3HELIX VE405 |
| 2537339 | SiBoost Smart 3HELIX VE407 |
| 2537623 | SiBoost Smart 3HELIX VE410 |
| 2537340 | SiBoost Smart 3HELIX VE602 |
| 2536375 | SiBoost Smart 3HELIX VE603 |
| 2537341 | SiBoost Smart 3HELIX VE604 |
| 2536376 | SiBoost Smart 3HELIX VE606 |
| 2537342 | SiBoost Smart 3HELIX VE608 |
| 2536377 | SiBoost Smart 3HELIX VE611 |
| 2536349 | SiBoost Smart 3HELIX VE1002 |
| 2537343 | SiBoost Smart 3HELIX VE1003 |
| 2536350 | SiBoost Smart 3HELIX VE1004 |
| 2537344 | SiBoost Smart 3HELIX VE1005 |
| 2536351 | SiBoost Smart 3HELIX VE1006 |
| 2536352 | SiBoost Smart 3HELIX VE1009 |
| 2536337 | SiBoost Smart 3HELIX VE1602 |
| 2537345 | SiBoost Smart 3HELIX VE1603/3kW |
| 2536338 | SiBoost Smart 3HELIX VE1603/4kW |
| 2536339 | SiBoost Smart 3HELIX VE1605 |
| 2536340 | SiBoost Smart 3HELIX VE1606 |
| 2540938 | SiBoost Smart 3HELIX VE2202/3kW |
| 2540905 | SiBoost Smart 3HELIX VE2202/4kW |
| 2540906 | SiBoost Smart 3HELIX VE2203 |

| Article no. | Description |
|---|---|
| 2540907 | SiBoost Smart 3HELIX VE2204 |
| 2540908 | SiBoost Smart 3HELIX VE2205 |
| 2540917 | SiBoost Smart 3HELIX VE3602/5,5kW |
| 2540918 | SiBoost Smart 3HELIX VE3602/7,5kW |
| 2540919 | SiBoost Smart 3HELIX VE3604 |
| 2540920 | SiBoost Smart 3HELIX VE3605 |
| 2540929 | SiBoost Smart 3HELIX VE5202 |
| 2540930 | SiBoost Smart 3HELIX VE5203 |
| 2540931 | SiBoost Smart 3HELIX VE5204 |
| 2540932 | SiBoost Smart 3HELIX VE5205 |
| 2541592 | SiBoost Smart 4HELIX VE204 |
| 2541593 | SiBoost Smart 4HELIX VE206 |
| 2541594 | SiBoost Smart 4HELIX VE208 |
| 2541595 | SiBoost Smart 4HELIX VE211 |
| 2537346 | SiBoost Smart 4HELIX VE403 |
| 2537360 | SiBoost Smart 4HELIX VE404 |
| 2537624 | SiBoost Smart 4HELIX VE405 |
| 2537347 | SiBoost Smart 4HELIX VE407 |
| 2537625 | SiBoost Smart 4HELIX VE410 |
| 2537348 | SiBoost Smart 4HELIX VE602 |
| 2536378 | SiBoost Smart 4HELIX VE603 |
| 2537349 | SiBoost Smart 4HELIX VE604 |
| 2536379 | SiBoost Smart 4HELIX VE606 |
| 2537350 | SiBoost Smart 4HELIX VE608 |
| 2536380 | SiBoost Smart 4HELIX VE611 |
| 2536353 | SiBoost Smart 4HELIX VE1002 |
| 2537351 | SiBoost Smart 4HELIX VE1003 |
| 2536354 | SiBoost Smart 4HELIX VE1004 |
| 2537352 | SiBoost Smart 4HELIX VE1005 |
| 2536355 | SiBoost Smart 4HELIX VE1006 |
| 2536356 | SiBoost Smart 4HELIX VE1009 |
| 2536341 | SiBoost Smart 4HELIX VE1602 |
| 2537353 | SiBoost Smart 4HELIX VE1603/3kW |
| 2536342 | SiBoost Smart 4HELIX VE1603/4kW |

| Article no. | Description |
|---|---|
| 2536343 | SiBoost Smart 4HELIX VE1605 |
| 2536344 | SiBoost Smart 4HELIX VE1606 |
| 2540939 | SiBoost Smart 4HELIX VE2202/3kW |
| 2540909 | SiBoost Smart 4HELIX VE2202/4kW |
| 2540910 | SiBoost Smart 4HELIX VE2203 |
| 2540911 | SiBoost Smart 4HELIX VE2204 |
| 2540912 | SiBoost Smart 4HELIX VE2205 |
| 2540921 | SiBoost Smart 4HELIX VE3602/5,5kW |
| 2540922 | SiBoost Smart 4HELIX VE3602/7,5kW |
| 2540923 | SiBoost Smart 4HELIX VE3604 |
| 2540924 | SiBoost Smart 4HELIX VE3605 |
| 2540933 | SiBoost Smart 4HELIX VE5202 |
| 2540934 | SiBoost Smart 4HELIX VE5203 |
| 2540935 | SiBoost Smart 4HELIX VE5204 |
| 2540936 | SiBoost Smart 4HELIX VE5205 |

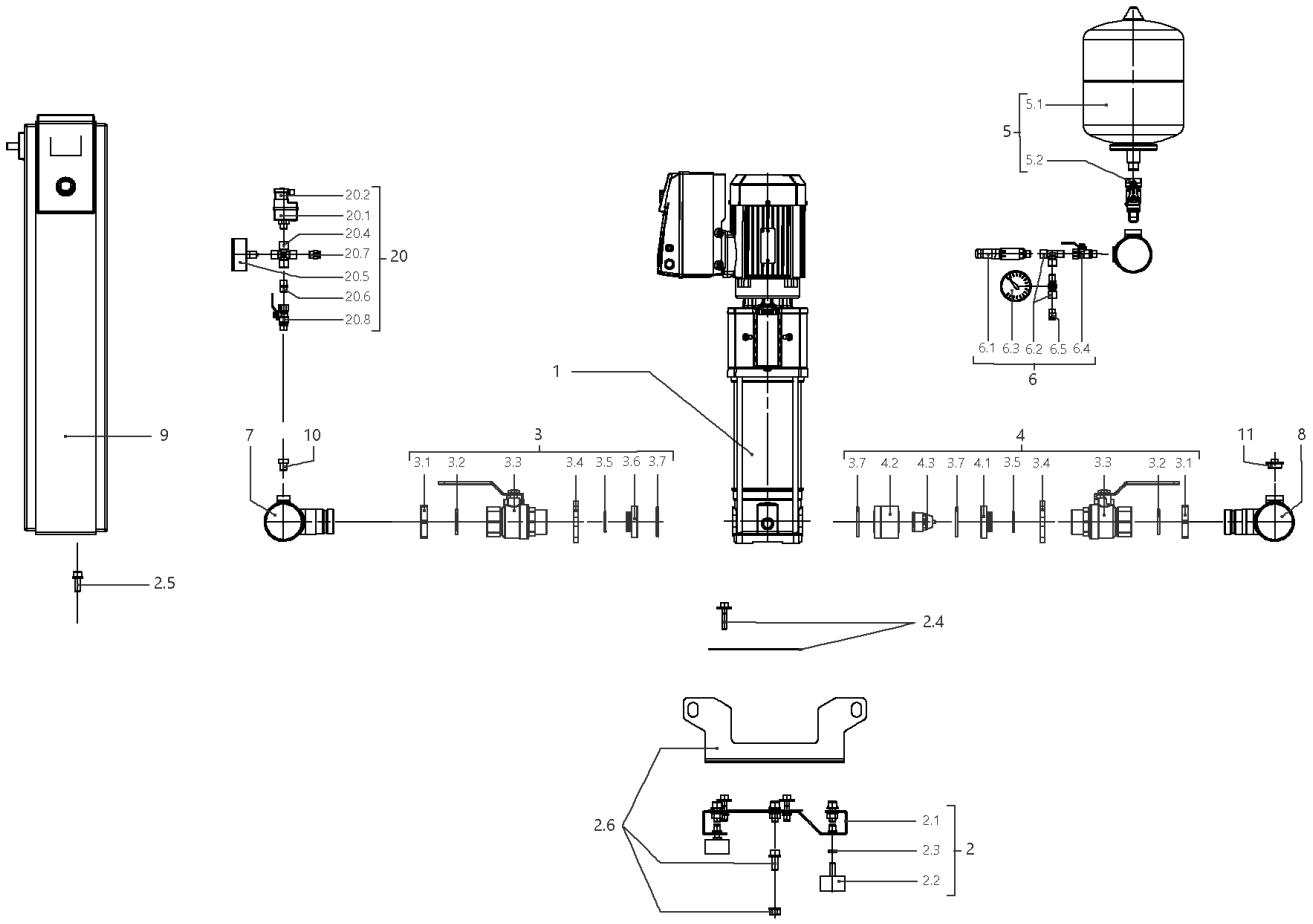
20.2
20.1
20.4
20.7
20.5
20.6
20.8
20
5.1
5
5.2
6.1 6.3 6.2 6.5 6.4
6
1
9
7
10
3
3.1 3.2 3.3 3.4 3.5 3.6 3.7
4
3.7 4.2 4.3 3.7 4.1 3.5 3.4 3.3 3.2 3.1
11
8
2.5
2.4
2.6
2.1
2.3
2.2
2

| Item | Article no. | Description | Quantity |
|---|---|---|---|
| 1 | | HELIX VE204-1/16/E/S | 1 |
| Note: TO / BIS / JUSQU'AU 30/04/2016 | | | |
| 1 | 4201563 | HELIX VE204-1/16/E/S | 1 |
| Note: FROM / AB / À PARTIR DU 01/05/2016 | | | |
| 2 | 4199874 | BASE PLATE DE2 850x300 M10 KIT | 1 |
| 2.1 | | > BASEPLATE_2x4/6/10V_E300_850x300_BOX_150 | 1 |
| 2.2 | 2028654 | > VIBRATION DAMPER D.50X30 M10X28 | 1 |
| 2.3 | 2028281 | > NUT M10 DIN936 (ISO4035) 17H VZ | 1 |
| 2.4 | 4199875 | > HOLDER PUMP Siboost Helix V2/4 KIT | 1 |
| 2.5 | 4197084 | > HOLDER SWITCHBOX WILO Smart Control KIT | 1 |
| 2.6 | 4197085 | > LIFTING Siboost HELIX SC KIT | 1 |
| 3 | 4199876 | SUCTION SIDE Siboost Helix V2/4/6 KIT | 1 |
| 3.1 | 2032610 | > NUT G11/4 MS VP. | 1 |
| 3.2 | 2032611 | > O-RING ID.36,09X3,53N DIN3771 E7502 | 1 |
| 3.3 | 2507646 | > BALL VALVE G11/4"M-F-W.HANDLE 1/4-TURN | 1 |
| 3.4 | 2032613 | > SCREWED FLANGE G1 1/4" LK-75 ST37VZ | 1 |
| 3.5 | 2032614 | > O-RING ID.29,82X2,62N DIN3771 E7502 | 1 |
| 3.6 | 2032615 | > SPACER F.I/A KUH.DN32 CUZN | 1 |
| 3.7 | 2032616 | > O-RING ID.44X3,53N DIN3771 E7502 | 1 |
| 4 | 4199877 | DELIVERY SIDE Siboost Helix V2/4/6 KIT | 1 |
| 3.1 | 2032610 | > NUT G11/4 MS VP. | 1 |
| 3.2 | 2032611 | > O-RING ID.36,09X3,53N DIN3771 E7502 | 1 |
| 3.3 | 2507646 | > BALL VALVE G11/4"M-F-W.HANDLE 1/4-TURN | 1 |
| 3.4 | 2032613 | > SCREWED FLANGE G1 1/4" LK-75 ST37VZ | 1 |
| 3.5 | 2032614 | > O-RING ID.29,82X2,62N DIN3771 E7502 | 1 |
| 4.1 | 2058116 | > SPACER F.I/A KUH.DN32 CUZN | 1 |
| 3.7 | 2032616 | > O-RING ID.44X3,53N DIN3771 E7502 | 1 |
| 4.2 | 2058115 | > HOUSING RFV(RV-IN) DN32 SGS/DRS | 1 |
| 4.3 | 2027870 | > NON-RETURN-DEVICE INSERT DN32(MTR) | 1 |
| 5 | 2032642 | DIAPHREM TANK 8L/PN16 DIN4807/T5 KIT | 1 |
| 5.1 | 2045914 | > DIAPHREM TANK 8L TYP-DD 16BAR | 1 |
| 5.2 | 2027853 | > FLOW FITTING G3/4 FOR DIAPHRAGM VES. | 1 |
| 6 | 4197076 | PRESSURE SENSOR/ GAUGE 0-16BAR KIT | 1 |
| 6.1 | 2085909 | > PRESS.SENSOR 1/4" 0-16BAR 4-20MA VP. | 1 |

| Item | Article no. | Description | Quantity |
|---|---|---|---|
| 6.2 | 4197077 | > T-PIECE 1/4" VP. | 1 |
| 6.3 | 2028692 | > PRESSURE GAUGE NG63-PN16-G1/4 | 1 |
| 6.4 | 2028291 | > BALL TAP R1/4" PN42 GIACOMINI R254DL | 1 |
| 6.5 | 2028691 | > BLOWGUN 1/4" MS 30BAR VP. | 1 |
| 7 | 4199878 | PIPE DE2 11/2''-2x11/4"+1x1/4x600 VP. | 1 |
| 8 | 4199879 | PIPE DE2 11/2''-2x11/4"+1x1/4+1x3/4x600 | 1 |
| 9 | | W-CTRL-SCE-B-2x0,55-1,5KW-T4-FM-ND1 | 1 |
| Note: TO / BIS / JUSQU'AU 18/05/2014 | | | |
| 9 | 2541913 | W-CTRL-SCE-B-2x10A-T34-FM-ND1-AVC-PKG | 1 |
| Note: FROM / AB / À PARTIR DU 19/05/2014 | | | |
| 10 | 4197079 | PLUG G1/4"x10 AISI304 KIT | 1 |
| 11 | 2032654 | PLUG R3/4" MS VIEGA 1751 | 1 |
| 20 | | ASSEMBLY WMS. DE-EB. +VP | 1 |
| 20.1 | 2028652 | > PRESSURE SWITCH PS3-ASR 1/(1,3) VP. | 1 |
| 20.2 | 2130983 | > PLUG PS3-415 WITH KABEL 1,5M 2NO VP. | 1 |
| 20.4 | 2028290 | > CROSSPIECE R1/4" MS-NICKEL | 1 |
| 20.5 | 2028687 | > PRESSURE GAUGE NG63 R1/4" HI.0-6BAR | 1 |
| 20.6 | 2054268 | > DUAL NIPPLE G1/4" x G1/4" MS VP. | 1 |
| 20.7 | 2028691 | > BLOWGUN 1/4" MS 30BAR VP. | 1 |
| 20.8 | 2028291 | > BALL TAP R1/4" PN42 GIACOMINI R254DL | 1 |

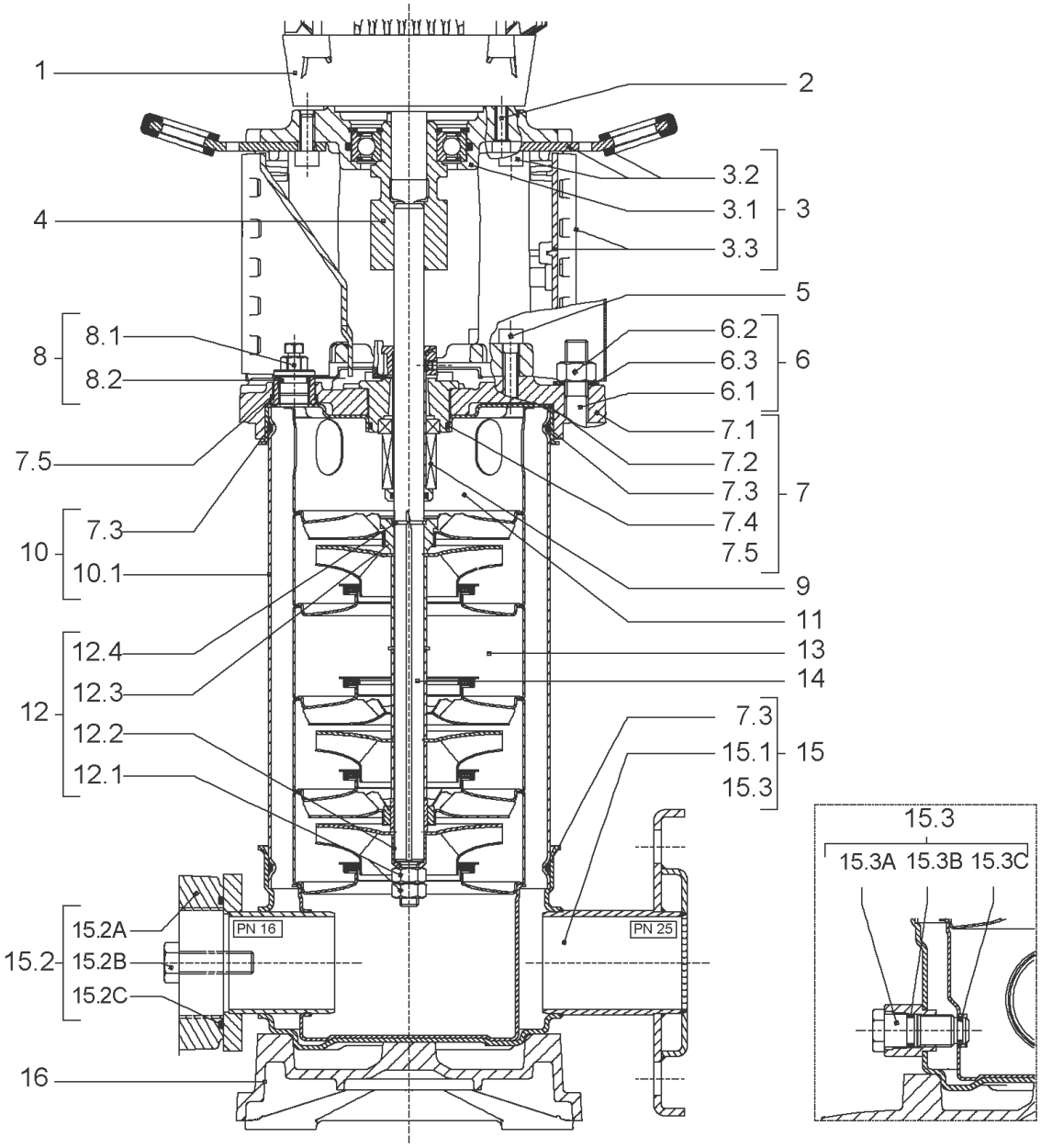
1
2
3.2
3.1
3
3.3
4
5
8.1
8
8.2
6.2
6.3
6
6.1
7.1
7.5
7.2
7.3
7
7.4
7.3
10
7.5
10.1
9
11
12.4
13
12.3
14
12
12.2
7.3
15.1
15
12.1
15.3
15.3
15.3A 15.3B 15.3C
15.2A
PN 16
PN 25
15.2
15.2B
15.2C
16

| Item | Article no. | Description | Quantity |
|---|---|---|---|
| 1 | | DRIVE HELIX-VE204-IE2-WE KIT | 1 |
| Note: MOTOR BRAND WILO ELEC | | | |
| 1 | | DRIVE HELIX-VE204-IE4-WE KIT | 1 |
| Note: MOTOR BRAND WILO ELEC | | | |
| 2 | 4159702 | SCREW M6X30 (4 PIECES) | 1 |
| 3 | 4171325 | LANTERN MONOBLOC FT85 HELIX KIT | 1 |
| 3.1 | | > M+5_6_LANTERN_ONE-PIECE_FT85_CATA | 1 |
| 3.2 | 2127604 | > EYELET CPL.FT HELIX(2 PIECES) | 1 |
| 3.3 | 4159692 | > COUPLING PROTECTOR FT HELIX KIT | 1 |
| 4 | 4178554 | COUPLING FT 85 Ø12XØ14 KIT | 1 |
| 5 | 4159707 | SCREW M8X30 (4 PIECES) | 1 |
| 6 | 2018368 | STUD BOLT M12X289 KIT | 1 |
| 6.1 | | > TIE BOLT M12-289x18x30-1.4057 | 1 |
| 6.2 | 2094647 | > NUT M12 M12 ISO4032 VP. | 1 |
| 6.3 | 2123557 | > WASHER CS-12.4-24-1.6-NFE25 (4 PIECES) | 1 |
| 7 | 4210143 | STATIONARY RING HOLDER HELIX 6" EPDM | 1 |
| 7.2 | 2127607 | > STATIONARY RING HOLDER 6" HELIX 1.4301 V | 1 |
| 7.3 | 4176513 | > O-RING FOR PUMP JACKET VP. | 1 |
| 7.4 | 2127603 | > O-RING ID.37,6x2,4 EPDM VP. | 1 |
| 7.5 | 2127602 | > O-RING ID.21,35x2 EPDM VP. | 1 |
| 8 | 4159686 | FILING/PURGING PLUG HELIX EPDM KIT | 1 |
| 9 | 4178564 | SEAL-KIT-HELIX2-4 O/E KIT | 1 |
| 10 | 2127574 | HOUSING PIPE D.152x160 1.4301 KIT | 1 |
| 7.3 | 4176513 | > O-RING FOR PUMP JACKET VP. | 1 |
| 10.1 | | > HOUSING-PIPE Ø152-M+1601/02-304 | 1 |
| 11 | 4179315 | CENTERING STAGE HELIX V2 1.4307 VP. | 1 |
| 12 | 4178568 | SHAFT EQUIPMENT HELIX V2/V4 KIT | 1 |
| 12.1 | | > NUT-H-M8-STAINLESS-STEEL A4-70 | 2 |
| 12.2 | | > SHAFT END WASHER Ø8/Ø12 316L | 1 |
| 12.3 | | > STOP COLLAR OF IMPELLER M+2/4 SINGLEBLOC | 1 |
| 12.4 | | > STOP-RUSH-1/2-D12xd2-M+316 | 2 |
| 13 | | HYDRAULIC HELIX V 204 1.4307 | 1 |
| 14 | 4178576 | SHAFT D.12X283 1.4301 VP. | 1 |
| 15 | 4174079 | PUMP HOUSING HELIX DN32 PN16 1.4301 KIT | 1 |

| Item | Article no. | Description | Quantity |
|---|---|---|---|
| 7.3 | 4176513 | > O-RING FOR PUMP JACKET VP. | 1 |
| 15.1 | | > BLASTING PPE HOUSING V-PN16-DN32-5"-304 | 1 |
| 15.2 | 4217889 | > COUNTER FLANGE-G1"-PN16-GJL KIT | 1 |
| 15.3 | 4171321 | > PRIMING/DRAIN PLUG EPDM HELIX KIT | 1 |
| 16 | 4177964 | BASEPLATE HELIX V2/4/6 PN16 VP. | 1 |

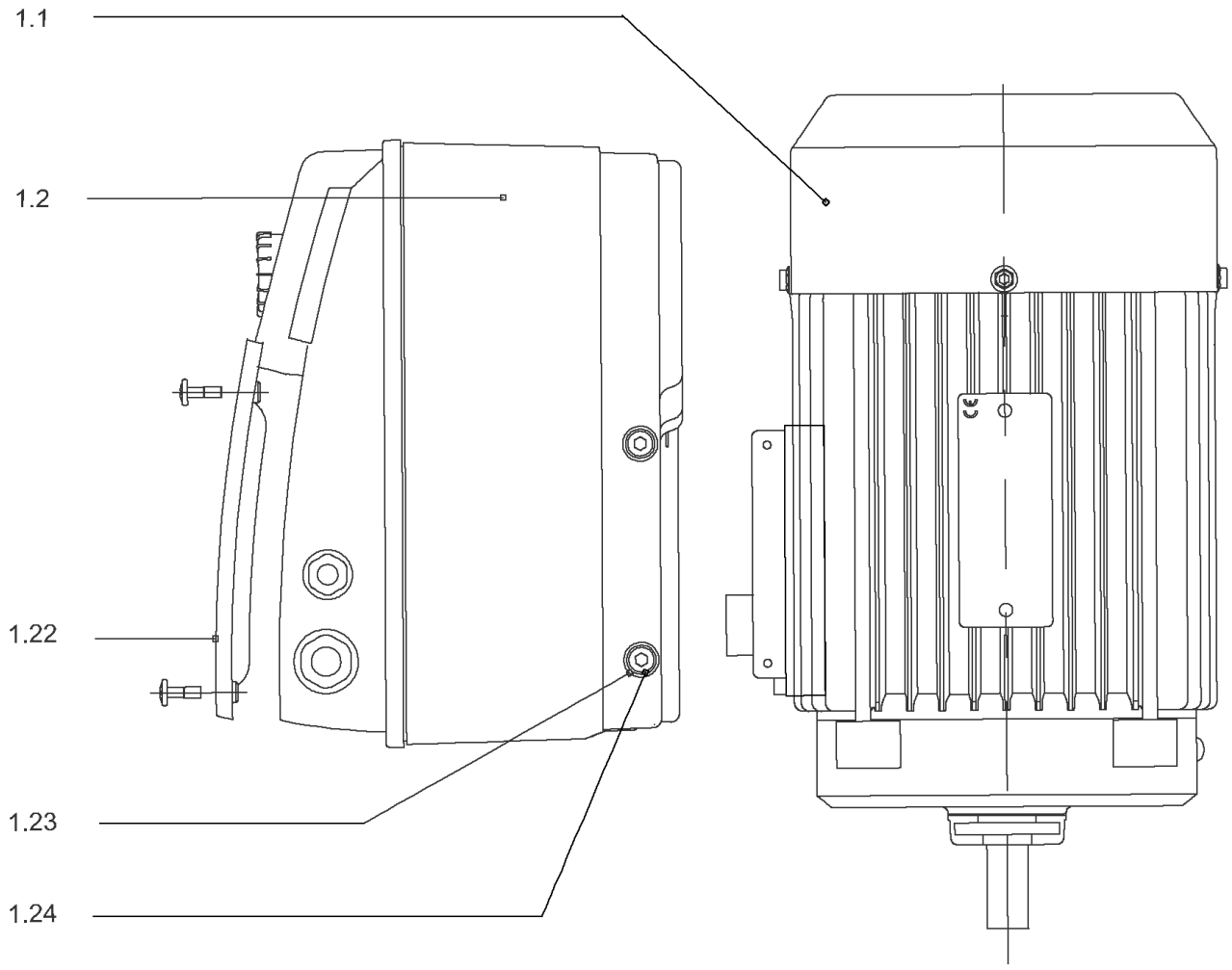
1.1
1.2
1.22
1.23
1.24

## DRIVE HELIX-VE204-IE2-WE KIT

| Item | Article no. | Description | Quantity |
|---|---|---|---|
| 1.1 | | MOTOR 0,55/2/80 3~ 380V 60HZ IE2 WE VP. | 1 |
| Note: no longer available/nicht mehrlieferbar/n'est plus disponible | | | |
| | | SPARE PARTS MOTOR:ON REQUEST | 1 |
| 1.2 | 4184861 | MODULE HELIX-VE204-IE2-WE KIT | 1 |
| 1.22 | 2054372 | > MODULE COVER TL1,TL2+GASKET KIT | 1 |
| 1.23 | 4215716 | > SCREW M5X16 DIN912 8.8 A2A (4pieces) VP. | 1 |
| 1.24 | 2057978 | > RONDELLE A5,3 DIN6797 FST ZN (4 PIECES) | 1 |

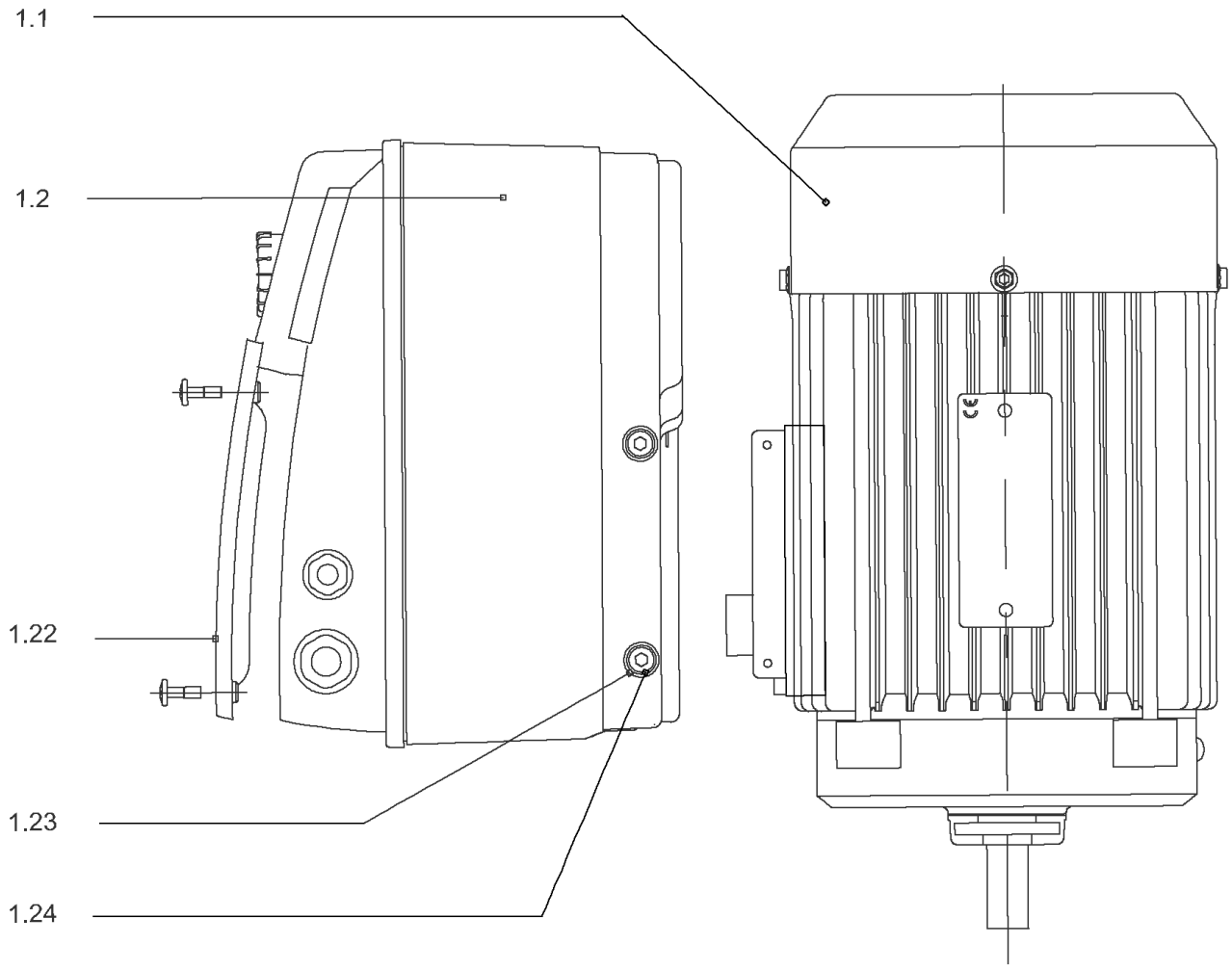
1.1
1.2
1.22
1.23
1.24

## DRIVE HELIX-VE204-IE4-WE KIT

| Item | Article no. | Description | Quantity |
|---|---|---|---|
| 1.1 | 4207912 | MOTOR 0.55/2/71 3~ 380V 60HZ IE4 WE VP. | 1 |
| | | SPARE PARTS MOTOR:ON REQUEST | 1 |
| 1.2 | 4209318 | MODULE HELIX-VE204-IE4-WE KIT | 1 |
| 1.22 | 2054372 | > MODULE COVER TL1,TL2+GASKET KIT | 1 |
| 1.23 | 4215716 | > SCREW M5X16 DIN912 8.8 A2A (4pieces) VP. | 1 |
| 1.24 | 2057978 | > RONDELLE A5,3 DIN6797 FST ZN (4 PIECES) | 1 |

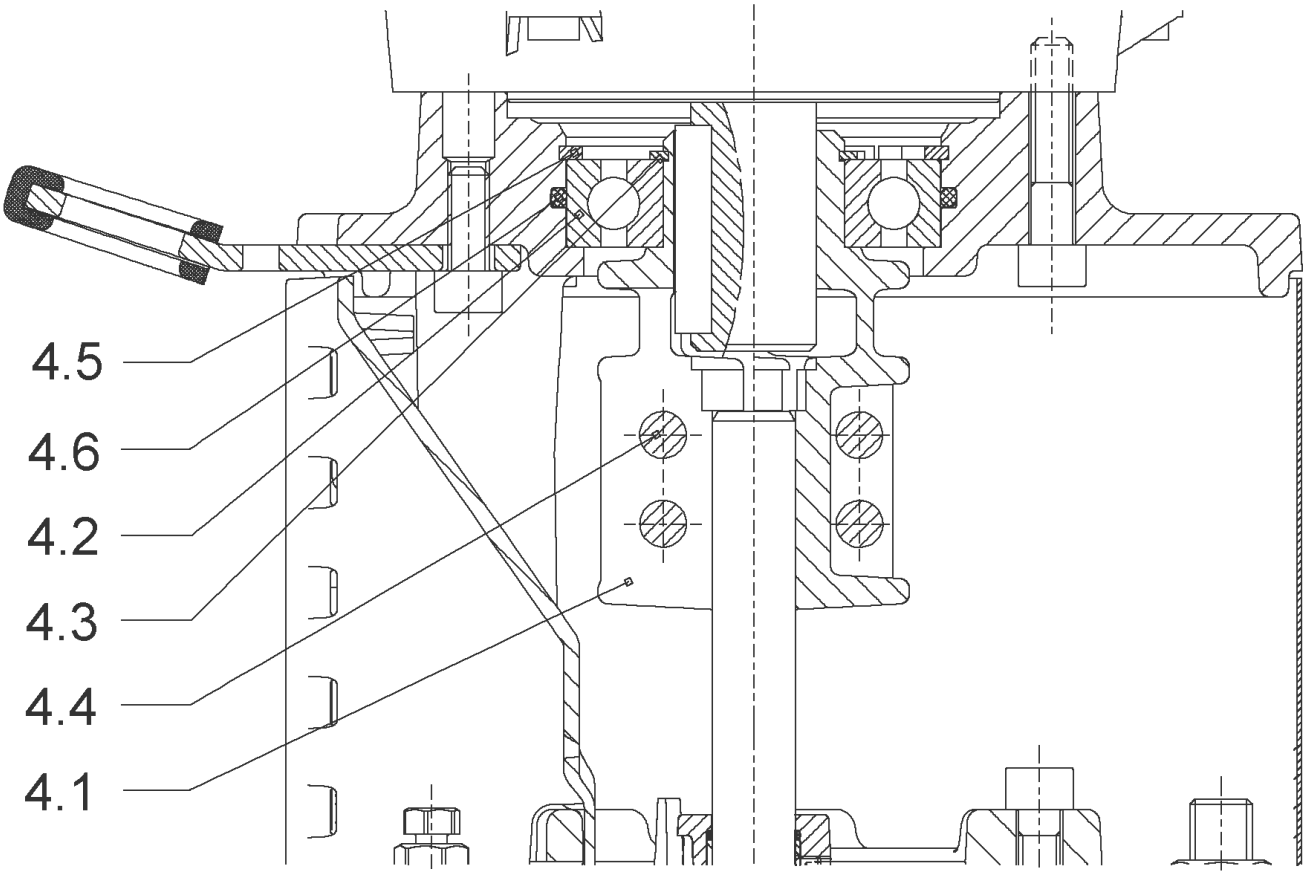
4.5
4.6
4.2
4.3
4.4
4.1

## COUPLING FT 85 Ø12XØ14 KIT (4178554)

| Item | Article no. | Description | Quantity |
|---|---|---|---|
| 4.1 | | COUPLING-M+ Ø12XØ14-FT85-MACHINED | 1 |
| 4.3 | 4208923 | CIRCLIP D25X1.2 VP. | 1 |
| 4.2 | 4177802 | BALL BEARING 6205C3-ZZ HTVP. | 1 |
| 4.4 | 4212716 | SCREW M6X20 KIT (4PIECES) | 1 |
| 4.5 | 4233124 | CIRCLIP-FOR-BORES-D52x2 VP. | 1 |
| 4.6 | 4234244 | O-RING 52X2 VP. | 1 |
| | | CONTACT-WASHER-6ETR-6,1x12,2x1,8-STEEL | 4 |

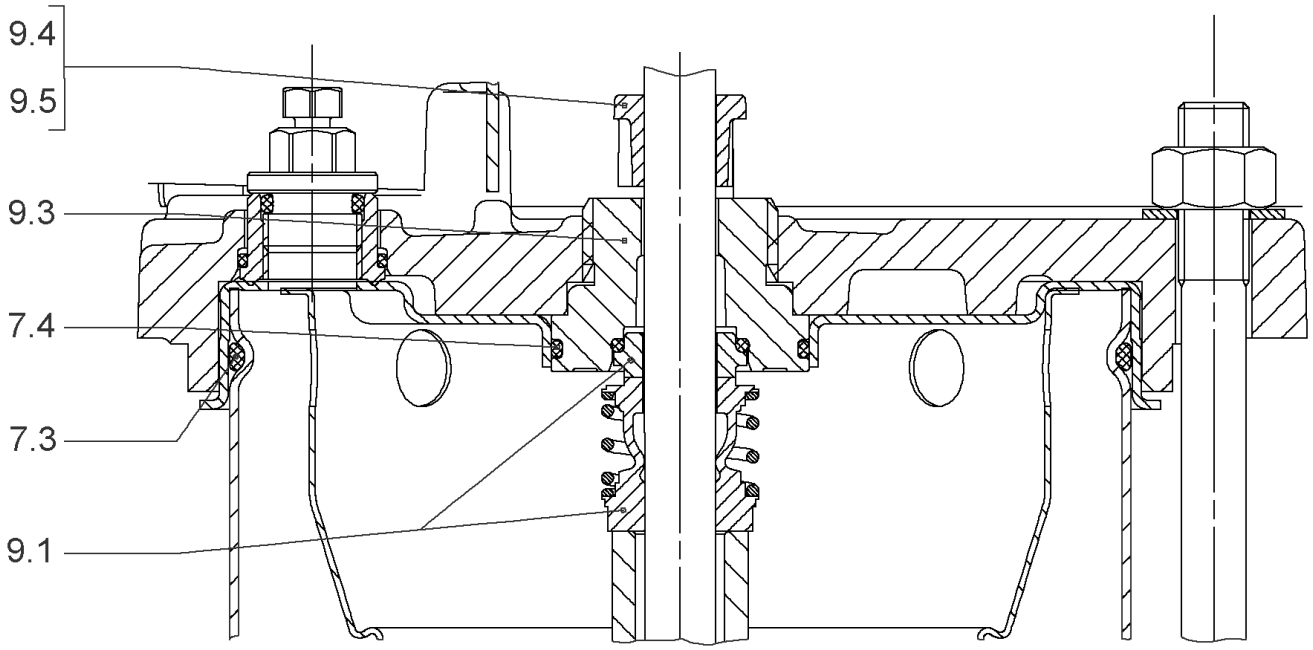
9.4
9.5
9.3
7.4
7.3
9.1

## SEAL-KIT-HELIX2-4 O/E KIT (4178564)

| Item | Article no. | Description | Quantity |
|---|---|---|---|
| 7.3 | 4176513 | O-RING FOR PUMP JACKET VP. | 1 |
| 7.4 | 2127603 | O-RING ID.37,6x2,4 EPDM VP. | 1 |
| 9.1 | 4178563 | M.SEAL.HELIX2-4 O/E VP. | 1 |
| 9.3 | 4178561 | RING HOLDER Ø22 1.4301 VP. | 1 |
| 9.5 | 4178562 | DRIVE RING D.22/12.2X10 MACH.VP. | 1 |
| 9.4 | 4176520 | SCREW CH M5x5 A4-70 ( 3PIECES ) | 1 |

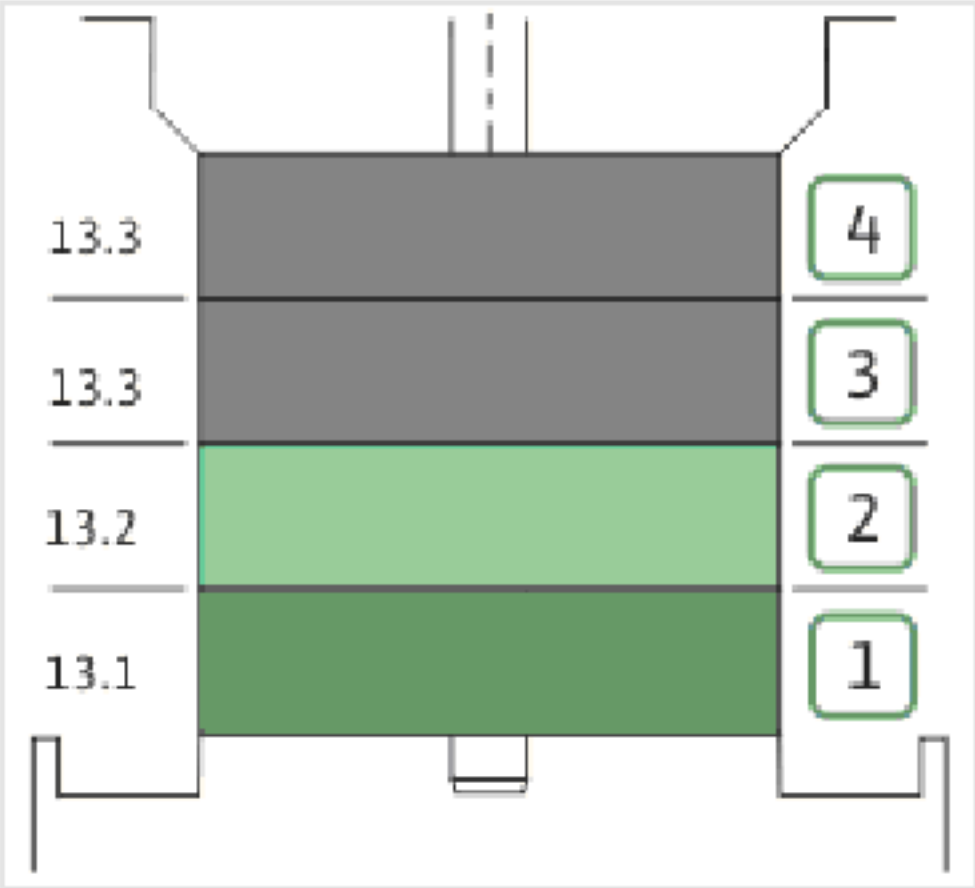
13.3
13.3
13.2
13.1
4
3
2
1

| Item | Article no. | Description | Quantity |
|---|---|---|---|
| 13.1 | 4179316 | STAGE HELIX 2 1.4301 KIT | 1 |
| | | > MACH.STG-CASING-WOGV-WNR-M+2-4-304 | 1 |
| | | > IMPELLER-M+2-304 | 1 |
| 13.2 | 4179317 | STAGE BEARING HELIX 2 1.4307 KIT | 1 |
| | | > MACH.BEARING-STG-CASING-WNR-M+2-304 | 1 |
| | | > IMPELLER-M+2-304 | 1 |
| | | > SHAFT SLEEVE SPACER Ø15,35x10,305-304 | 1 |
| | | > SHAFT-SLEEVE-D12xD16x14-CW | 1 |
| 13.3 | 4179319 | INTERMEDIATE STAGE HELIX 2 1.4301 KIT | 1 |
| | | > CORPS-ETG-STD-ACR-AJR-USIN.M+2-304 | 1 |
| | | > IMPELLER-M+2-304 | 1 |
| | | > IMPELLER SPACER Ø12,05X14,85-L24,285-304 | 1 |

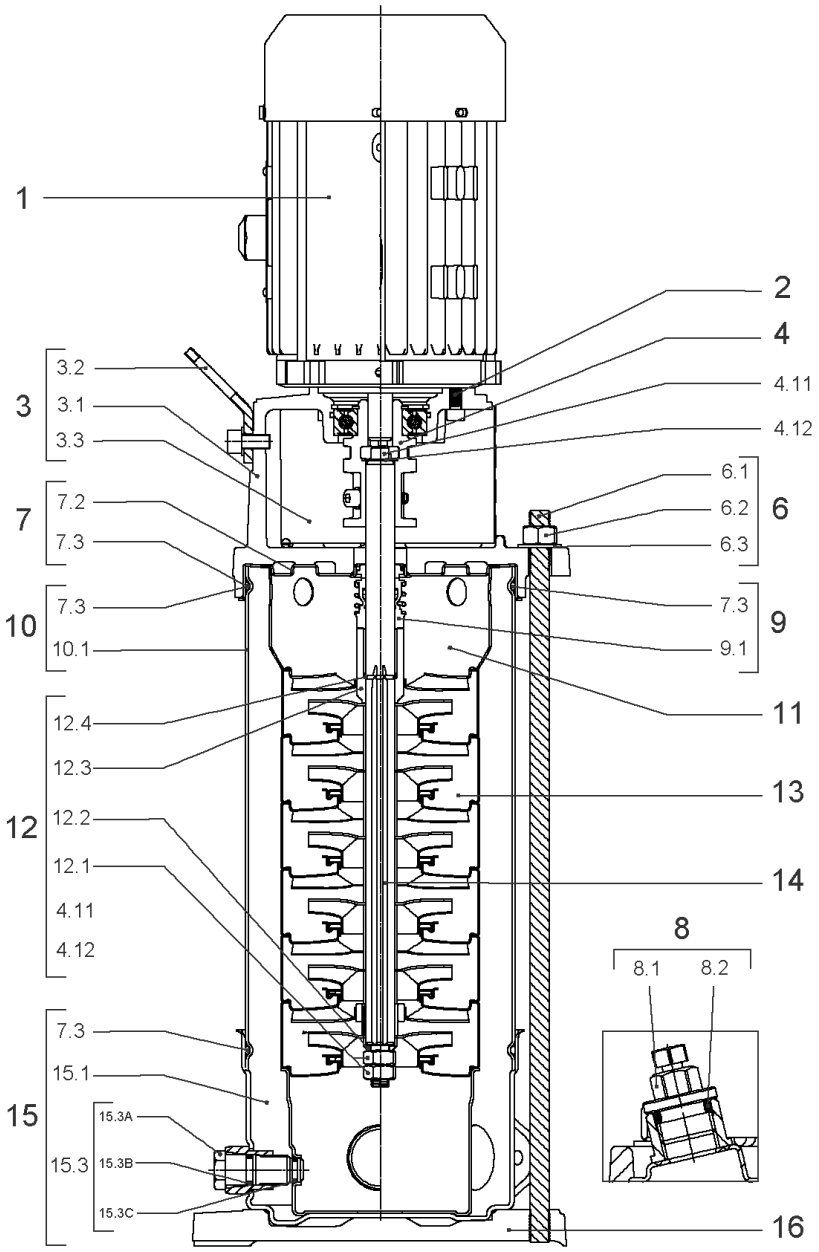
1
2
4
4.11
4.12
3
3.2
3.1
3.3
7
7.2
7.3
6
6.1
6.2
6.3
10
7.3
10.1
9
7.3
9.1
11
12
12.4
12.3
12.2
12.1
4.11
4.12
13
14
8
8.1
8.2
15
7.3
15.1
15.3
15.3A
15.3B
15.3C
16

| Item | Article no. | Description | Quantity |
|---|---|---|---|
| 1 | | DRIVE HELIX-VE204-IE4-WE KIT | 1 |
| Note: MOTOR BRAND WILO ELEC | | | |
| | | SPARE PARTS MOTOR:ON REQUEST | 1 |
| 2 | 4212716 | SCREW M6X20 KIT (4PIECES) | 1 |
| 3 | 4213715 | LANTERN FT85 HELIX KIT | 1 |
| 3.1 | | > LANT-MOT-VMI-ReDTC6"-FT85-MACHINED+CATA | 1 |
| 3.2 | 4184852 | > EYELET CPL.FT HELIX (2 PIECES) | 1 |
| 3.3 | 4213713 | > COUPLING PROTECTOR FT85/100 HELIX KIT | 1 |
| 4 | 4212718 | COUPLING HELIX D12 FT85 KIT | 1 |
| 6 | 2018368 | STUD BOLT M12X289 KIT | 1 |
| 6.1 | | > TIE BOLT M12-289x18x30-1.4057 | 1 |
| 6.2 | 2094647 | > NUT M12 M12 ISO4032 VP. | 1 |
| 6.3 | 2123557 | > WASHER CS-12.4-24-1.6-NFE25 (4 PIECES) | 1 |
| 7 | 4212722 | STATIONARY RING HOLDER HELIX D23 ReDTC | 1 |
| 7.2 | 4212720 | > STATIONARY RING HOLDER HELIX D23 VP. | 1 |
| 7.3 | 4176513 | > O-RING FOR PUMP JACKET VP. | 1 |
| 8 | 4212724 | FILING/PURGING PLUG HELIX ReDTC KIT | 1 |
| 8.1 | | > FILLING PLUG MVI6"-304 | 1 |
| 8.2 | 4177800 | > O-RING EPDM PLUG HELIX VP. | 1 |
| 9 | 4212726 | MECH.SEAL HELIX V2/4 O/E ReDTC KIT | 1 |
| 9.1 | 4178563 | > M.SEAL.HELIX2-4 O/E VP. | 1 |
| 7.3 | 4176513 | > O-RING FOR PUMP JACKET VP. | 1 |
| 10 | 2127574 | HOUSING PIPE D.152x160 1.4301 KIT | 1 |
| 7.3 | 4176513 | > O-RING FOR PUMP JACKET VP. | 1 |
| 10.1 | | > HOUSING-PIPE Ø152-M+1601/02-304 | 1 |
| 11 | 4179315 | CENTERING STAGE HELIX V2 1.4307 VP. | 1 |
| 12 | 4212729 | SHAFT EQUIPMENT HELIX V2/4 ReDTC KIT | 1 |
| 12.1 | | > NUT-H-M8-STAINLESS-STEEL A4-70 | 1 |
| 12.2 | | > SHAFT END WASHER Ø8/Ø12 316L | 1 |
| 12.3 | | > 1/2-SNAP-RING-2/4M3-316L | 1 |
| 12.4 | | > STOP-RUSH-1/2-D12xd2-M+316 | 1 |
| 4.11 | | > SCREW CHC-M6X14-8.8-ISO4762-GEOMET500A | 1 |
| 4.12 | | > WASHER D.24 L6U ZINK | 1 |
| 13 | | HYDRAULIC HELIX V 204 1.4307 | 1 |

| Item | Article no. | Description | Quantity |
|---|---|---|---|
| 14 | 4213744 | SHAFT D.12X231 HELIX 1.4057 VP. | 1 |
| 15 | 4174079 | PUMP HOUSING HELIX DN32 PN16 1.4301 KIT | 1 |
| 7.3 | 4176513 | > O-RING FOR PUMP JACKET VP. | 1 |
| 15.1 | | > BLASTING PPE HOUSING V-PN16-DN32-5"-304 | 1 |
| 15.2 | 4217889 | > COUNTER FLANGE-G1"-PN16-GJL KIT | 1 |
| 15.3 | 4171321 | > PRIMING/DRAIN PLUG EPDM HELIX KIT | 1 |
| 16 | 4177964 | BASEPLATE HELIX V2/4/6 PN16 VP. | 1 |

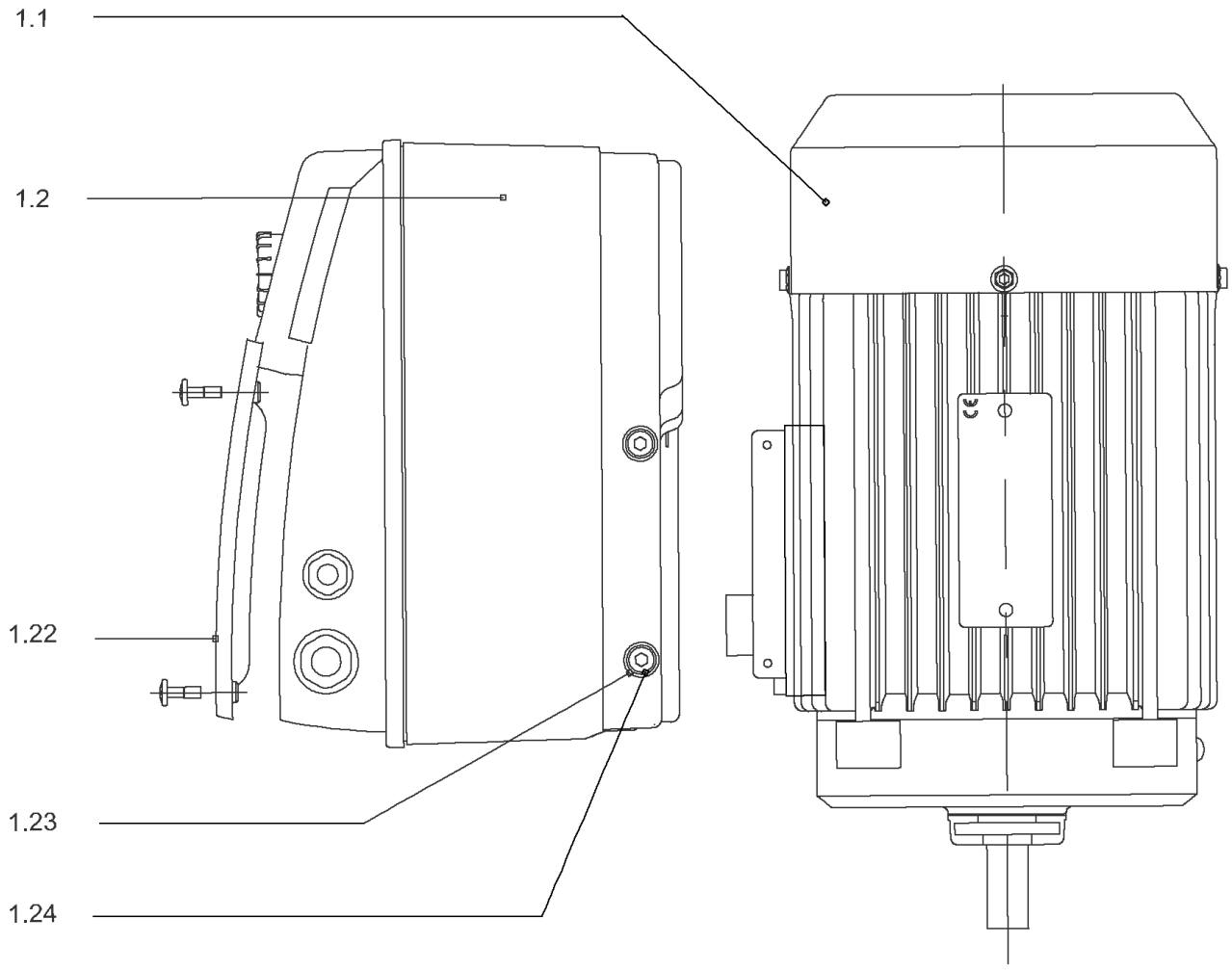
1.1
1.2
1.22
1.23
1.24

## DRIVE HELIX-VE204-IE4-WE KIT

| Item | Article no. | Description | Quantity |
|---|---|---|---|
| 1.1 | 4207912 | MOTOR 0.55/2/71 3~ 380V 60HZ IE4 WE VP. | 1 |
| | | SPARE PARTS MOTOR:ON REQUEST | 1 |
| 1.2 | 4209318 | MODULE HELIX-VE204-IE4-WE KIT | 1 |
| 1.22 | 2054372 | > MODULE COVER TL1,TL2+GASKET KIT | 1 |
| 1.23 | 4215716 | > SCREW M5X16 DIN912 8.8 A2A (4pieces) VP. | 1 |
| 1.24 | 2057978 | > RONDELLE A5,3 DIN6797 FST ZN (4 PIECES) | 1 |

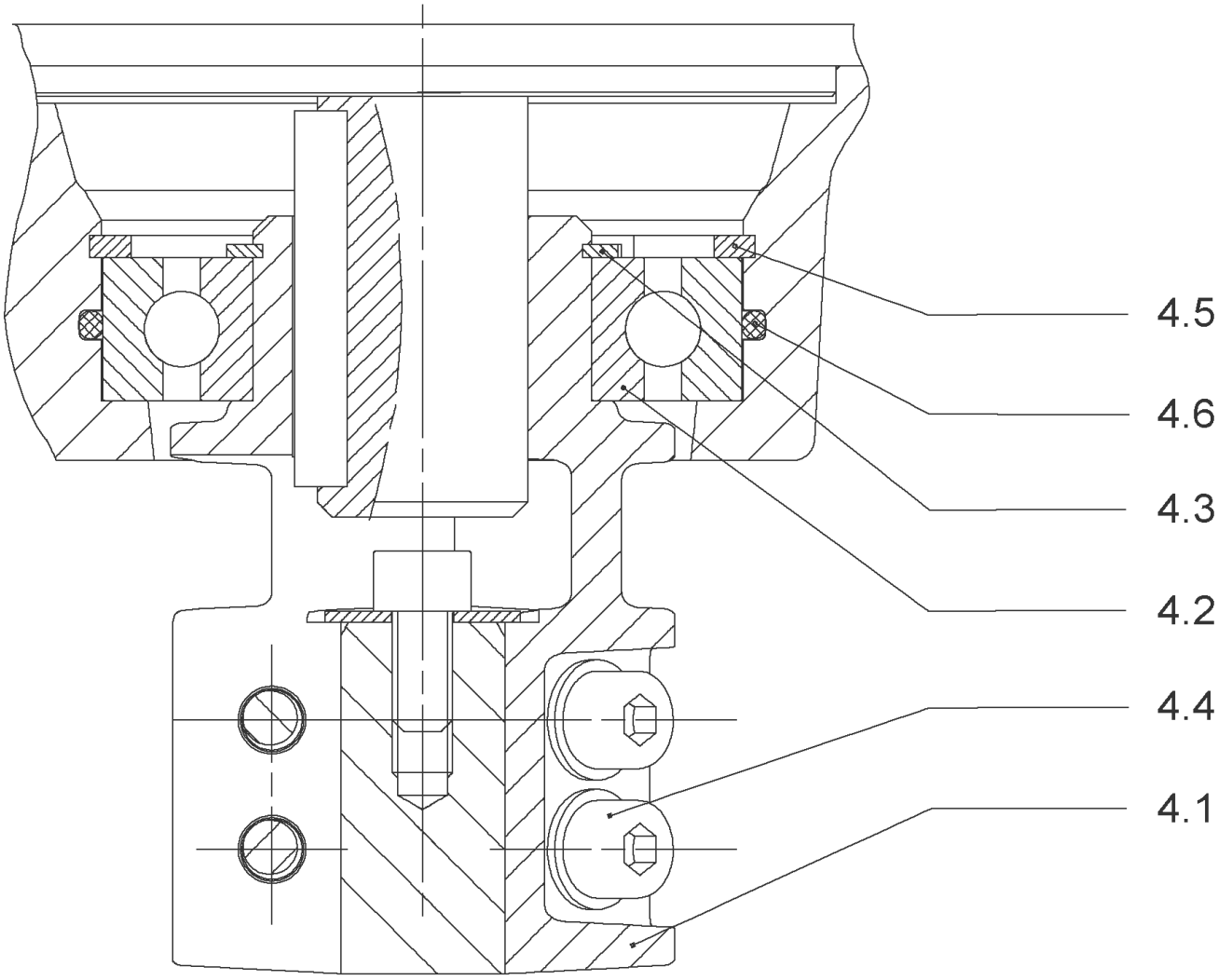
4.5
4.6
4.3
4.2
4.4
4.1

## COUPLING HELIX D12 FT85 KIT (4212718)

| Item | Article no. | Description | Quantity |
|---|---|---|---|
| 4.1 | | COUPLING-VMI-Ø12xØ14-FT85-USINE | 1 |
| 4.2 | 4177802 | BALL BEARING 6205C3-ZZ HTVP. | 1 |
| 4.3 | 4208923 | CIRCLIP D25X1.2 VP. | 1 |
| 4.4 | 4212716 | SCREW M6X20 KIT (4PIECES) | 1 |
| 4.5 | 4233124 | CIRCLIP-FOR-BORES-D52x2 VP. | 1 |
| 4.6 | 4234244 | O-RING 52X2 VP. | 1 |
| | | CONTACT-WASHER-6ETR-6,1x12,2x1,8-STEEL | 1 |

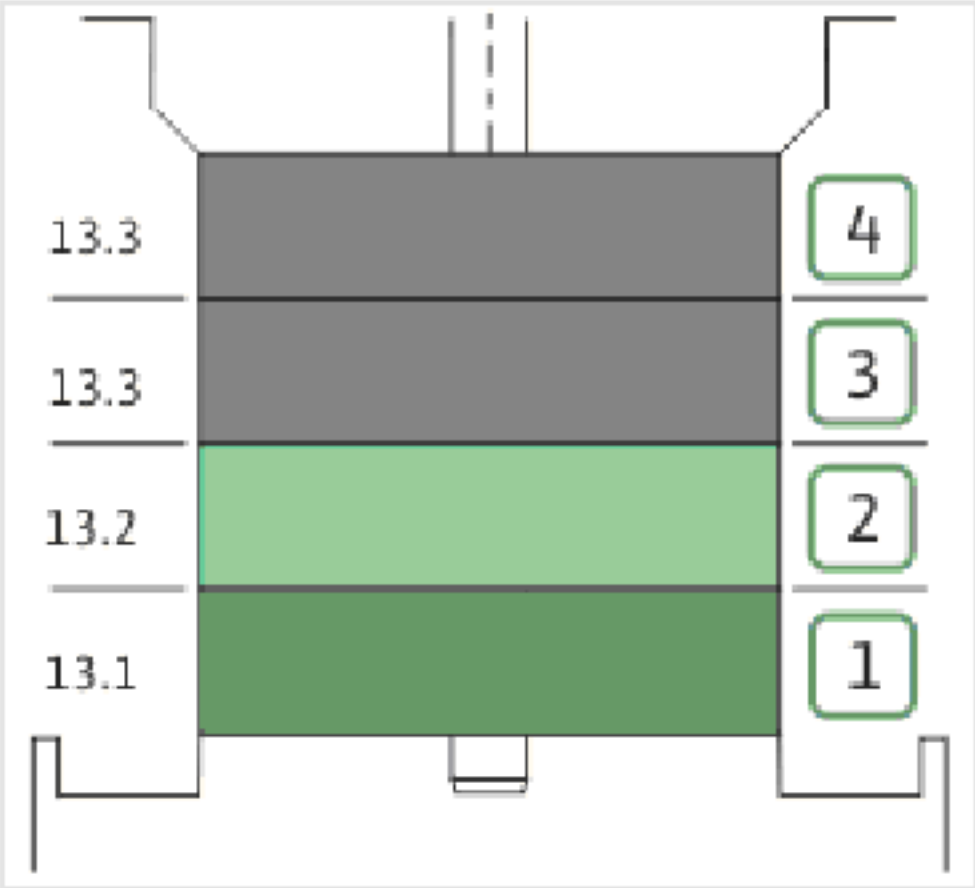
13.3
13.3
13.2
13.1
4
3
2
1

| Item | Article no. | Description | Quantity |
|---|---|---|---|
| 13.1 | 4179316 | STAGE HELIX 2 1.4301 KIT | 1 |
| | | > MACH.STG-CASING-WOGV-WNR-M+2-4-304 | 1 |
| | | > IMPELLER-M+2-304 | 1 |
| 13.2 | 4179317 | STAGE BEARING HELIX 2 1.4307 KIT | 1 |
| | | > MACH.BEARING-STG-CASING-WNR-M+2-304 | 1 |
| | | > IMPELLER-M+2-304 | 1 |
| | | > SHAFT SLEEVE SPACER Ø15,35x10,305-304 | 1 |
| | | > SHAFT-SLEEVE-D12xD16x14-CW | 1 |
| 13.3 | 4179319 | INTERMEDIATE STAGE HELIX 2 1.4301 KIT | 1 |
| | | > CORPS-ETG-STD-ACR-AJR-USIN.M+2-304 | 1 |
| | | > IMPELLER-M+2-304 | 1 |
| | | > IMPELLER SPACER Ø12,05X14,85-L24,285-304 | 1 |

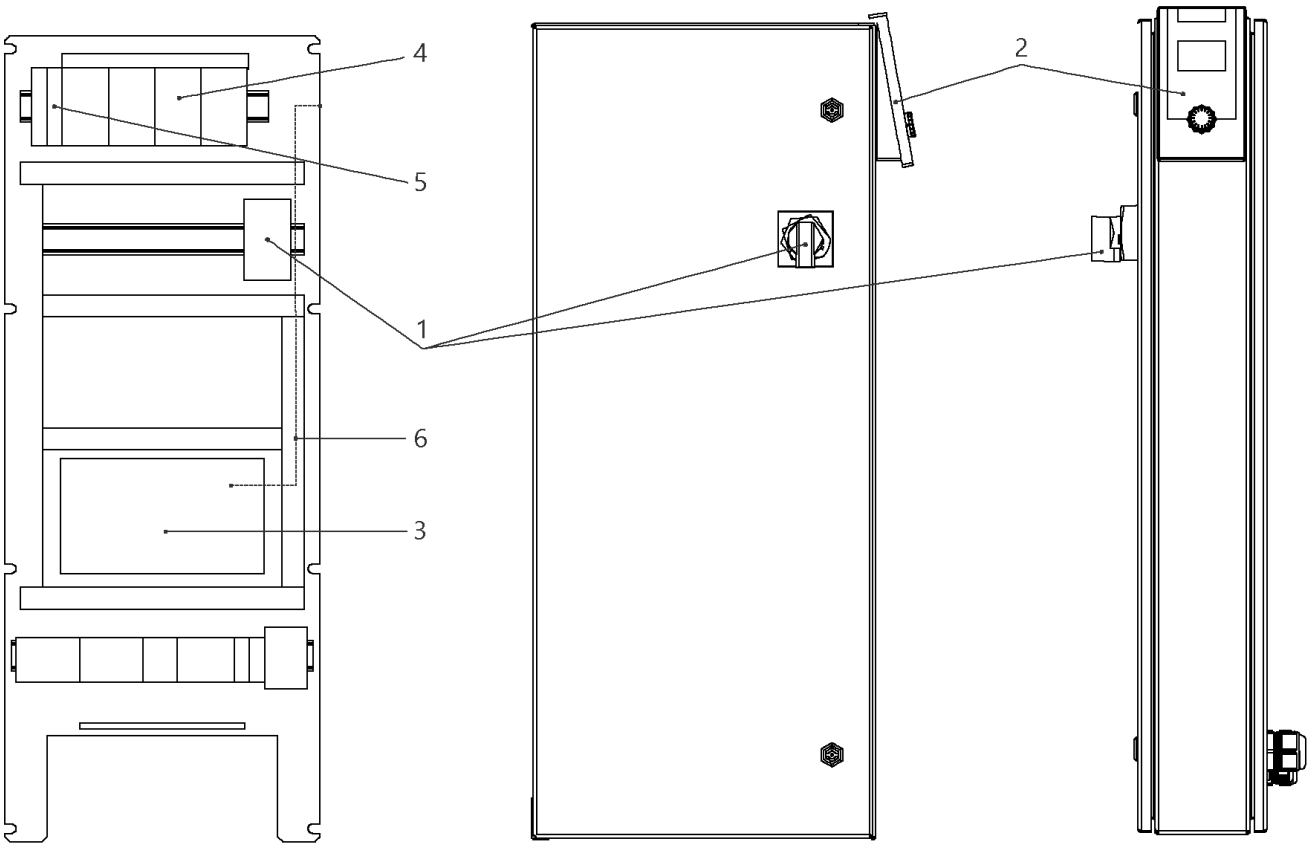
4
5
1
6
3
2

| Item | Article no. | Description | Quantity |
|---|---|---|---|
| 1 | 2104470 | MAIN SWITCH OT40F3 L250 KIT | 1 |
| 2 | 4184784 | CONTROL PANEL HMI SC KIT | 1 |
| 2 | 4185259 | ASSEMBLY DISPLAY SC PKG VP. | 1 |
| 3 | 4185257 | ASSEMBLY CPU SCe Booster VP. | 1 |
| 4 | 2051217 | AUTOM.CIRCUIT BREAKER S203 B16 TO7,5kW | 1 |
| 5 | 2046288 | CIRCUIT BREAKER S201 B16 | 1 |
| 6 | 4197081 | CABLE RJ45 CAT6 0,5M RED SC-PANEL VP. | 1 |

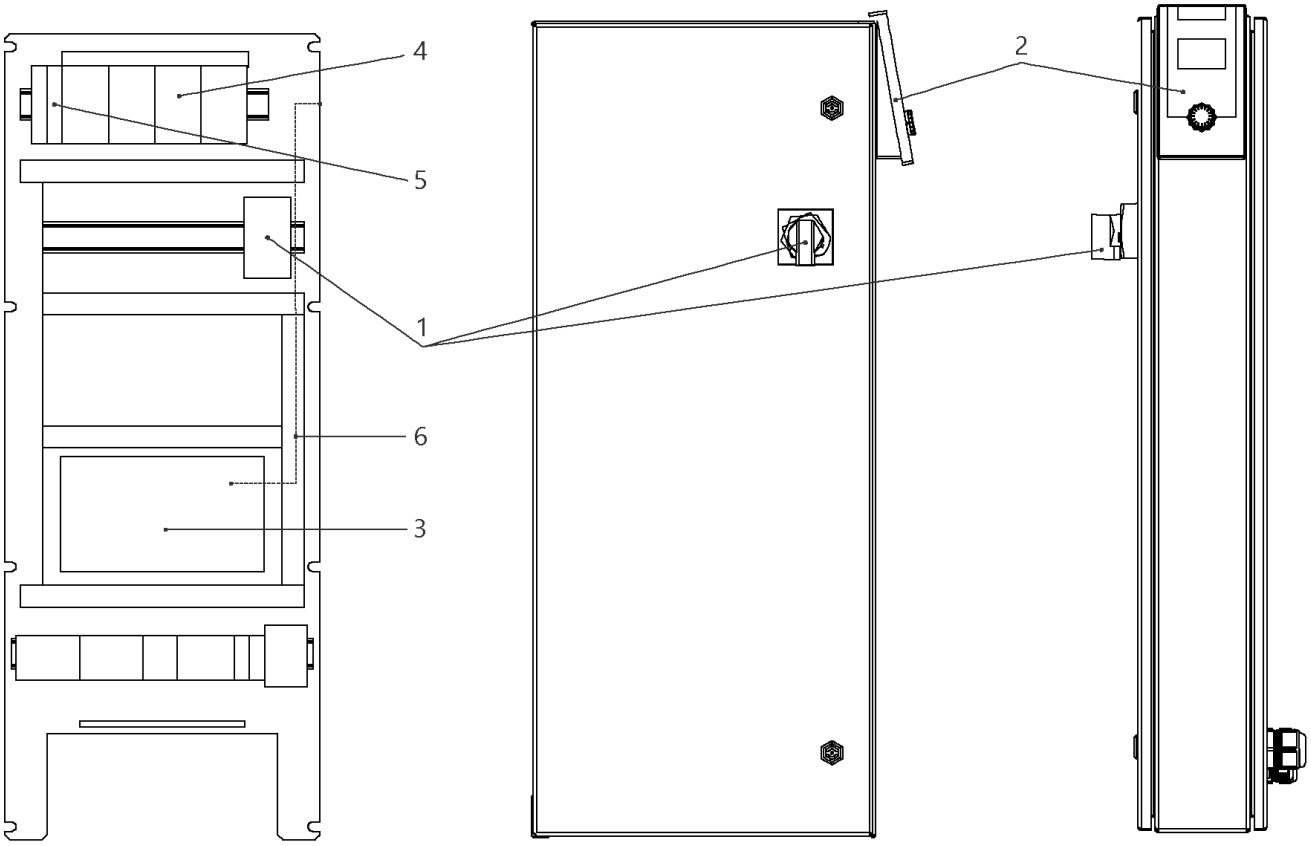
4
5
1
6
3
2

## W-CTRL-SCE-B-2x10A-T34-FM-ND1-AVC-PKG (2541913)

| Item | Article no. | Description | Quantity |
|---|---|---|---|
| 1 | 2104470 | MAIN SWITCH OT40F3 L250 KIT | 1 |
| 2 | 4184784 | CONTROL PANEL HMI SC KIT | 1 |
| 2 | 4185259 | ASSEMBLY DISPLAY SC PKG VP. | 1 |
| Note: DISPLAY ALONE / PLATINE SEULE | | | |
| 3 | 4185257 | ASSEMBLY CPU SCe Booster VP. | 1 |
| 4 | 2119861 | AUTOMATIC CIRCUIT BREAKER S203 B13 3POL. | 1 |
| 5 | 2046288 | CIRCUIT BREAKER S201 B16 | 1 |
| 6 | 4197081 | CABLE RJ45 CAT6 0,5M RED SC-PANEL VP. | 1 |

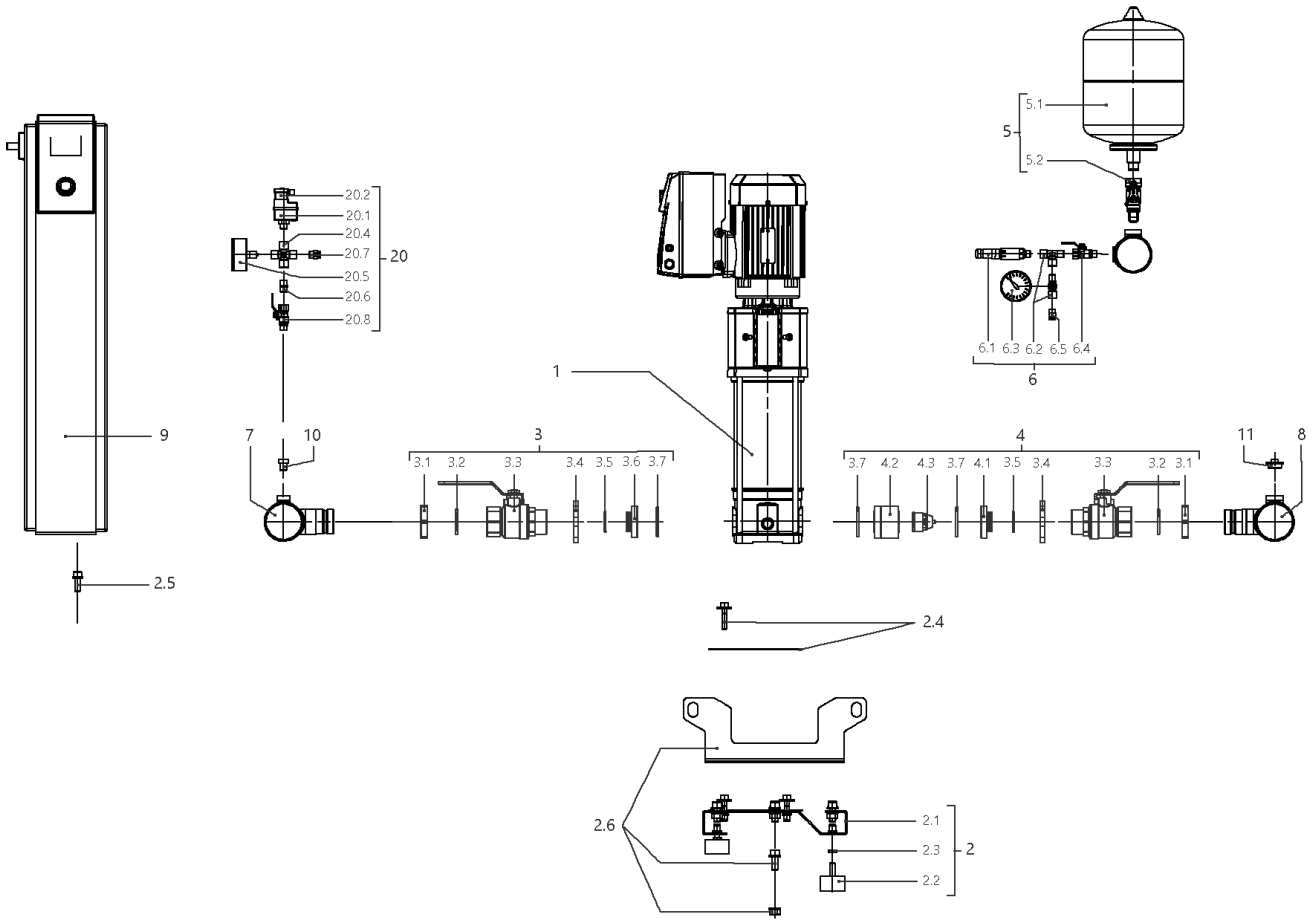
5.1
5
5.2
20.2
20.1
20.4
20.7
20
20.5
20.6
20.8
6.1 6.3 6.2 6.5 6.4
6
1
9
7
10
3
3.1 3.2 3.3 3.4 3.5 3.6 3.7
4
3.7 4.2 4.3 3.7 4.1 3.5 3.4 3.3 3.2 3.1
11
8
2.5
2.4
2.6
2.1
2.3
2
2.2

| Item | Article no. | Description | Quantity |
|---|---|---|---|
| 1 | | HELIX VE206-1/16/E/S | 1 |
| Note: TO / BIS / JUSQU'AU 29/02/2016 | | | |
| 1 | 4201564 | HELIX VE206-1/16/E/S | 1 |
| Note: FROM / AB / À PARTIR DU 01/03/2016 | | | |
| 2 | 4199874 | BASE PLATE DE2 850x300 M10 KIT | 1 |
| 2.1 | | > BASEPLATE_2x4/6/10V_E300_850x300_BOX_150 | 1 |
| 2.2 | 2028654 | > VIBRATION DAMPER D.50X30 M10X28 | 1 |
| 2.3 | 2028281 | > NUT M10 DIN936 (ISO4035) 17H VZ | 1 |
| 2.4 | 4199875 | > HOLDER PUMP Siboost Helix V2/4 KIT | 1 |
| 2.5 | 4197084 | > HOLDER SWITCHBOX WILO Smart Control KIT | 1 |
| 2.6 | 4197085 | > LIFTING Siboost HELIX SC KIT | 1 |
| 3 | 4199876 | SUCTION SIDE Siboost Helix V2/4/6 KIT | 1 |
| 3.1 | 2032610 | > NUT G11/4 MS VP. | 1 |
| 3.2 | 2032611 | > O-RING ID.36,09X3,53N DIN3771 E7502 | 1 |
| 3.3 | 2507646 | > BALL VALVE G11/4"M-F-W.HANDLE 1/4-TURN | 1 |
| 3.4 | 2032613 | > SCREWED FLANGE G1 1/4" LK-75 ST37VZ | 1 |
| 3.5 | 2032614 | > O-RING ID.29,82X2,62N DIN3771 E7502 | 1 |
| 3.6 | 2032615 | > SPACER F.I/A KUH.DN32 CUZN | 1 |
| 3.7 | 2032616 | > O-RING ID.44X3,53N DIN3771 E7502 | 1 |
| 4 | 4199877 | DELIVERY SIDE Siboost Helix V2/4/6 KIT | 1 |
| 3.1 | 2032610 | > NUT G11/4 MS VP. | 1 |
| 3.2 | 2032611 | > O-RING ID.36,09X3,53N DIN3771 E7502 | 1 |
| 3.3 | 2507646 | > BALL VALVE G11/4"M-F-W.HANDLE 1/4-TURN | 1 |
| 3.4 | 2032613 | > SCREWED FLANGE G1 1/4" LK-75 ST37VZ | 1 |
| 3.5 | 2032614 | > O-RING ID.29,82X2,62N DIN3771 E7502 | 1 |
| 4.1 | 2058116 | > SPACER F.I/A KUH.DN32 CUZN | 1 |
| 3.7 | 2032616 | > O-RING ID.44X3,53N DIN3771 E7502 | 1 |
| 4.2 | 2058115 | > HOUSING RFV(RV-IN) DN32 SGS/DRS | 1 |
| 4.3 | 2027870 | > NON-RETURN-DEVICE INSERT DN32(MTR) | 1 |
| 5 | 2032642 | DIAPHREM TANK 8L/PN16 DIN4807/T5 KIT | 1 |
| 5.1 | 2045914 | > DIAPHREM TANK 8L TYP-DD 16BAR | 1 |
| 5.2 | 2027853 | > FLOW FITTING G3/4 FOR DIAPHRAGM VES. | 1 |
| 6 | 4197076 | PRESSURE SENSOR/ GAUGE 0-16BAR KIT | 1 |
| 6.1 | 2085909 | > PRESS.SENSOR 1/4" 0-16BAR 4-20MA VP. | 1 |

| Item | Article no. | Description | Quantity |
|---|---|---|---|
| 6.2 | 4197077 | > T-PIECE 1/4" VP. | 1 |
| 6.3 | 2028692 | > PRESSURE GAUGE NG63-PN16-G1/4 | 1 |
| 6.4 | 2028291 | > BALL TAP R1/4" PN42 GIACOMINI R254DL | 1 |
| 6.5 | 2028691 | > BLOWGUN 1/4" MS 30BAR VP. | 1 |
| 7 | 4199878 | PIPE DE2 11/2''-2x11/4"+1x1/4x600 VP. | 1 |
| 8 | 4199879 | PIPE DE2 11/2''-2x11/4"+1x1/4+1x3/4x600 | 1 |
| 9 | | W-CTRL-SCE-B-2x0,55-1,5KW-T4-FM-ND1 | 1 |
| Note: TO / BIS / JUSQU'AU 18/05/2014 | | | |
| 9 | 2541913 | W-CTRL-SCE-B-2x10A-T34-FM-ND1-AVC-PKG | 1 |
| Note: FROM / AB / À PARTIR DU 19/05/2014 | | | |
| 10 | 4197079 | PLUG G1/4"x10 AISI304 KIT | 1 |
| 11 | 2032654 | PLUG R3/4" MS VIEGA 1751 | 1 |
| 20 | | ASSEMBLY WMS. DE-EB. +VP | 1 |
| 20.1 | 2028652 | > PRESSURE SWITCH PS3-ASR 1/(1,3) VP. | 1 |
| 20.2 | 2130983 | > PLUG PS3-415 WITH KABEL 1,5M 2NO VP. | 1 |
| 20.4 | 2028290 | > CROSSPIECE R1/4" MS-NICKEL | 1 |
| 20.5 | 2028687 | > PRESSURE GAUGE NG63 R1/4" HI.0-6BAR | 1 |
| 20.6 | 2054268 | > DUAL NIPPLE G1/4" x G1/4" MS VP. | 1 |
| 20.7 | 2028691 | > BLOWGUN 1/4" MS 30BAR VP. | 1 |
| 20.8 | 2028291 | > BALL TAP R1/4" PN42 GIACOMINI R254DL | 1 |

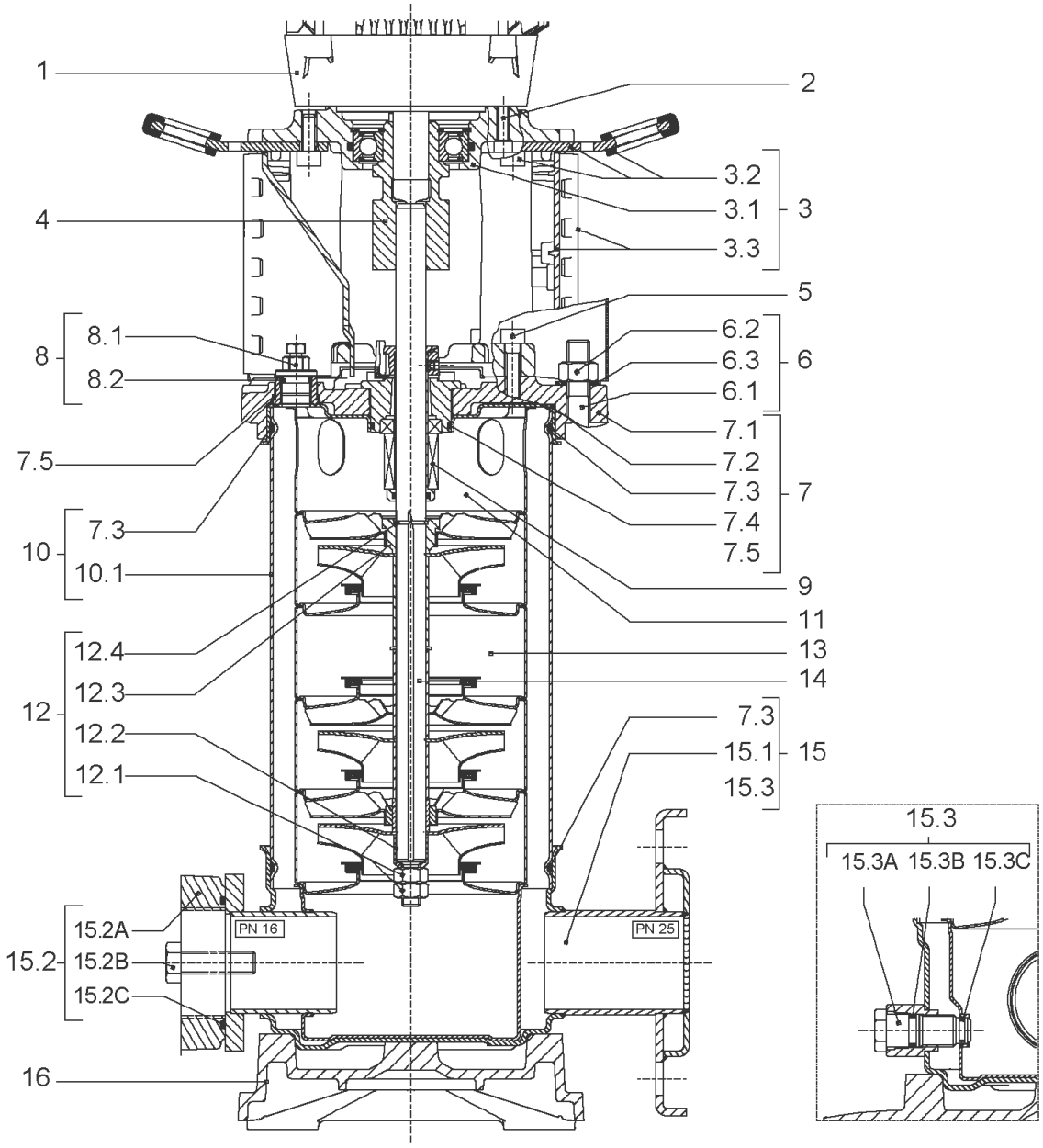
1
2
3.2
3.1
3
3.3
4
5
8.1
8
8.2
6.2
6.3
6
6.1
7.1
7.5
7.2
7.3
7
7.4
7.3
10
7.5
10.1
9
11
12.4
13
12.3
14
12
12.2
7.3
15.1
15
12.1
15.3
15.3
15.3A 15.3B 15.3C
15.2A
PN 16
PN 25
15.2
15.2B
15.2C
16

| Item | Article no. | Description | Quantity |
|---|---|---|---|
| 1 | | DRIVE HELIX-VE206-IE2-WE KIT | 1 |
| Note: MOTOR BRAND WILO ELEC | | | |
| 1 | | DRIVE HELIX-VE206-IE4-WE KIT | 1 |
| Note: MOTOR BRAND WILO ELEC | | | |
| 2 | 4159702 | SCREW M6X30 (4 PIECES) | 1 |
| 3 | 4172790 | EQUIPED LANTERN NEXIS FT 100 KIT | 1 |
| 3.1 | | > M+5_6_LANTERN_ONE-PIECE_FT100_CATA | 1 |
| 3.2 | 2127604 | > EYELET CPL.FT HELIX(2 PIECES) | 1 |
| 3.3 | 4159692 | > COUPLING PROTECTOR FT HELIX KIT | 1 |
| 4 | 4178578 | COUPLING D.12XD.19 FT100 KIT | 1 |
| 5 | 4159707 | SCREW M8X30 (4 PIECES) | 1 |
| 6 | 4177817 | STUD BOLT M12X341 KIT | 1 |
| 6.1 | | > TIE BOLT M12-341x18x30-1.4057 | 1 |
| 6.2 | 2094647 | > NUT M12 M12 ISO4032 VP. | 1 |
| 6.3 | 2123557 | > WASHER CS-12.4-24-1.6-NFE25 (4 PIECES) | 1 |
| 7 | 4210143 | STATIONARY RING HOLDER HELIX 6" EPDM | 1 |
| 7.2 | 2127607 | > STATIONARY RING HOLDER 6" HELIX 1.4301 V | 1 |
| 7.3 | 4176513 | > O-RING FOR PUMP JACKET VP. | 1 |
| 7.4 | 2127603 | > O-RING ID.37,6x2,4 EPDM VP. | 1 |
| 7.5 | 2127602 | > O-RING ID.21,35x2 EPDM VP. | 1 |
| 8 | 4159686 | FILING/PURGING PLUG HELIX EPDM KIT | 1 |
| 9 | 4178564 | SEAL-KIT-HELIX2-4 O/E KIT | 1 |
| 10 | 4177818 | HOUSING PIPES Ø152-M+1004-304 KIT | 1 |
| 7.3 | 4176513 | > O-RING FOR PUMP JACKET VP. | 1 |
| 10.1 | | > HOUSING-PIPE Ø152-M+1004/1603-304 | 1 |
| 11 | 4179315 | CENTERING STAGE HELIX V2 1.4307 VP. | 1 |
| 12 | 4178568 | SHAFT EQUIPMENT HELIX V2/V4 KIT | 1 |
| 12.1 | | > NUT-H-M8-STAINLESS-STEEL A4-70 | 2 |
| 12.2 | | > SHAFT END WASHER Ø8/Ø12 316L | 1 |
| 12.3 | | > STOP COLLAR OF IMPELLER M+2/4 SINGLEBLOC | 1 |
| 12.4 | | > STOP-RUSH-1/2-D12xd2-M+316 | 2 |
| 13 | | HYDRAULIC HELIX V 206 1.4307 | 1 |
| 14 | 4178584 | SHAFT D.12X333 1.4301 VP. | 1 |
| 15 | 4174079 | PUMP HOUSING HELIX DN32 PN16 1.4301 KIT | 1 |

| Item | Article no. | Description | Quantity |
|---|---|---|---|
| 7.3 | 4176513 | > O-RING FOR PUMP JACKET VP. | 1 |
| 15.1 | | > BLASTING PPE HOUSING V-PN16-DN32-5"-304 | 1 |
| 15.2 | 4217889 | > COUNTER FLANGE-G1"-PN16-GJL KIT | 1 |
| 15.3 | 4171321 | > PRIMING/DRAIN PLUG EPDM HELIX KIT | 1 |
| 16 | 4177964 | BASEPLATE HELIX V2/4/6 PN16 VP. | 1 |

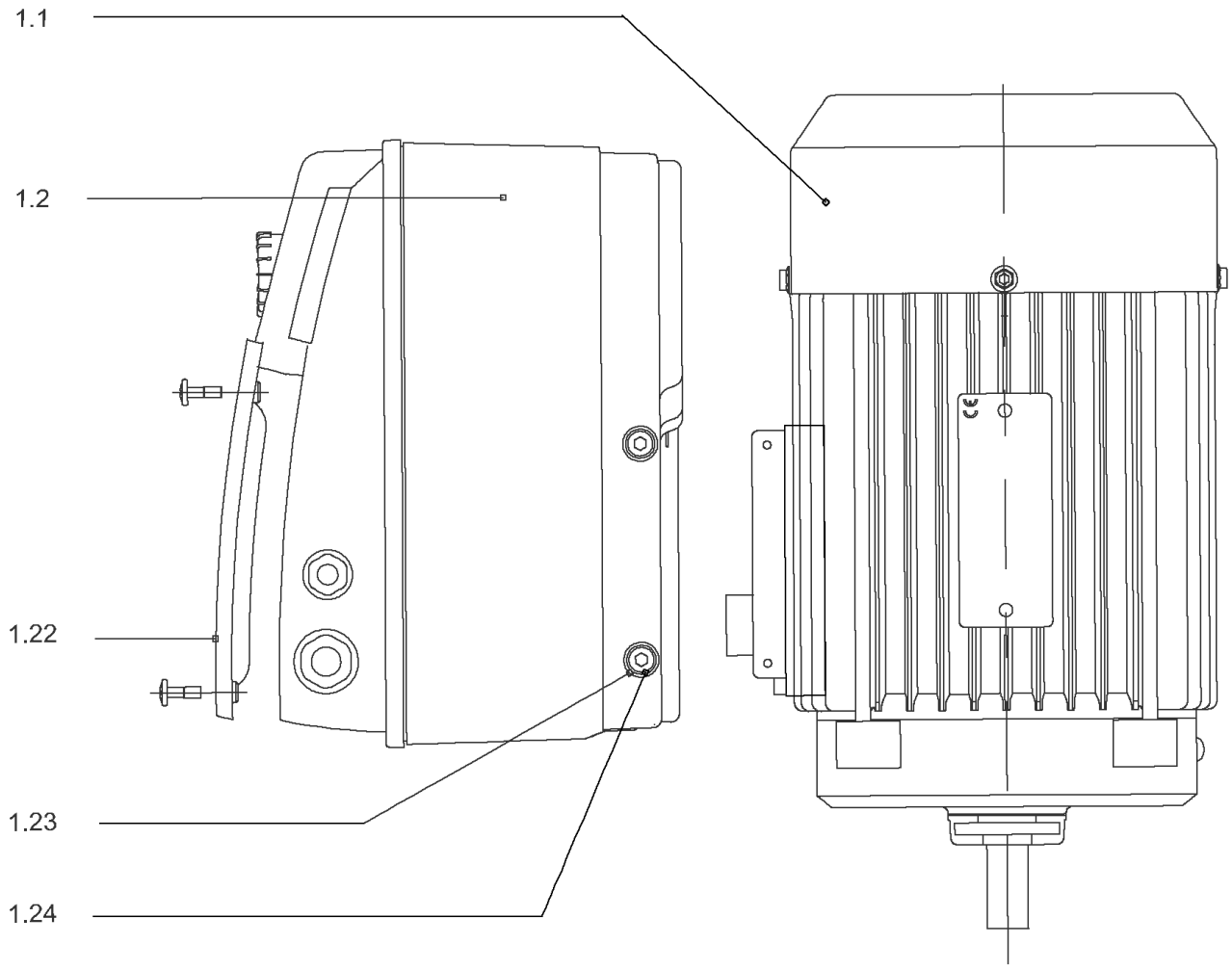
1.1
1.2
1.22
1.23
1.24

## DRIVE HELIX-VE206-IE2-WE KIT

| Item | Article no. | Description | Quantity |
|---|---|---|---|
| 1.1 | | MOTOR 0,75/2/80 3~ 380V 60HZ IE2 WE VP. | 1 |
| Note: no longer available/nicht mehrlieferbar/n'est plus disponible | | | |
| | | SPARE PARTS MOTOR:ON REQUEST | 1 |
| 1.2 | 4184863 | MODULE HELIX-VE206-IE2-WE KIT | 1 |
| 1.22 | 2054372 | > MODULE COVER TL1,TL2+GASKET KIT | 1 |
| 1.23 | 4215716 | > SCREW M5X16 DIN912 8.8 A2A (4pieces) VP. | 1 |
| 1.24 | 2057978 | > RONDELLE A5,3 DIN6797 FST ZN (4 PIECES) | 1 |

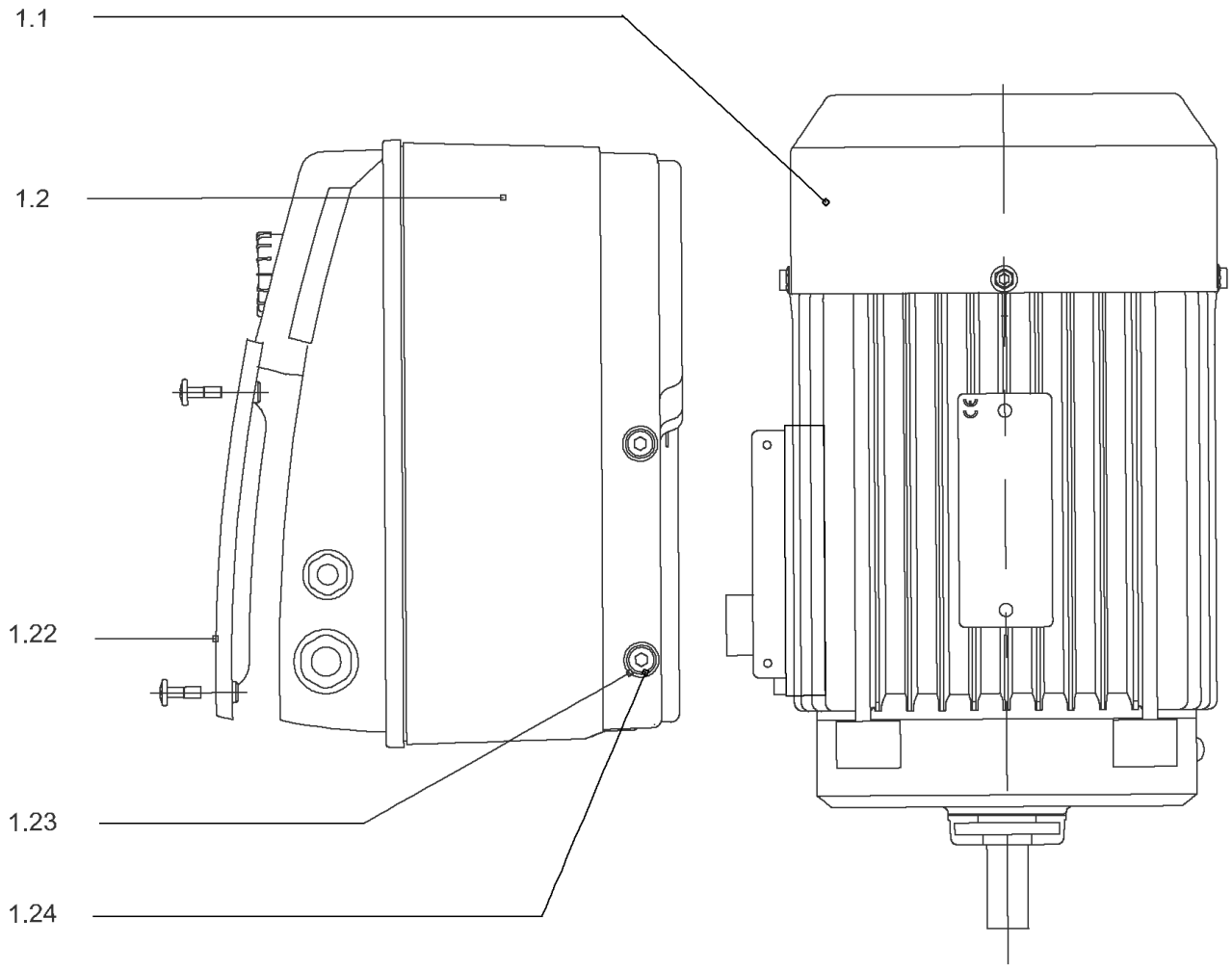
1.1
1.2
1.22
1.23
1.24

## DRIVE HELIX-VE206-IE4-WE KIT

| Item | Article no. | Description | Quantity |
|---|---|---|---|
| 1.1 | 4207914 | MOTOR 0.75/2/80 3~ 380V 60HZ IE4 WE VP. | 1 |
| | | SPARE PARTS MOTOR:ON REQUEST | 1 |
| 1.2 | 4209321 | MODULE HELIX-VE206-IE4-WE KIT | 1 |
| 1.22 | 2054372 | > MODULE COVER TL1,TL2+GASKET KIT | 1 |
| 1.23 | 4215716 | > SCREW M5X16 DIN912 8.8 A2A (4pieces) VP. | 1 |
| 1.24 | 2057978 | > RONDELLE A5,3 DIN6797 FST ZN (4 PIECES) | 1 |

## COUPLING D.12XD.19 FT100 KIT (4178578)

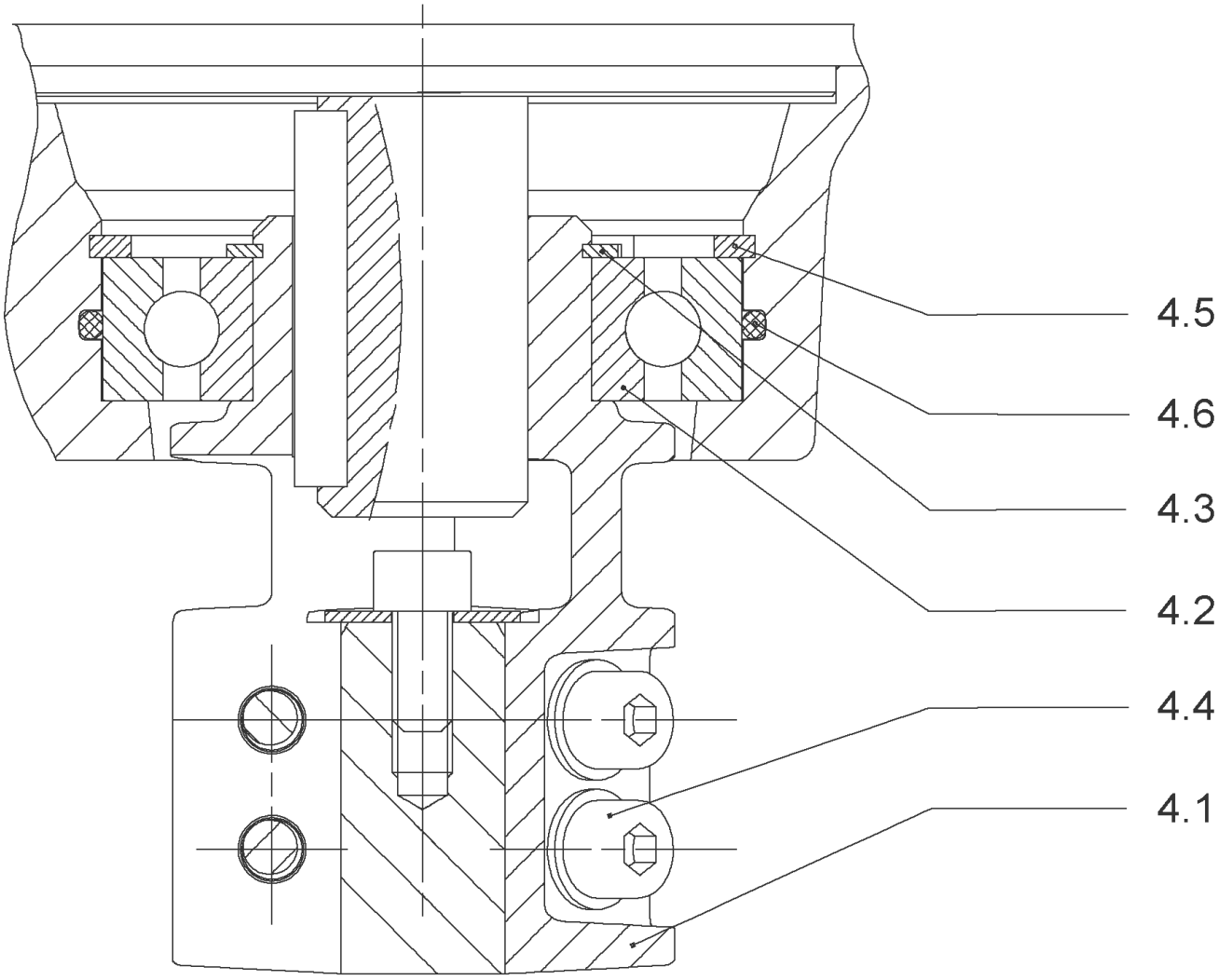

## COUPLING D.12XD.19 FT100 KIT (4178578)

| Item | Article no. | Description | Quantity |
|---|---|---|---|
| 4.1 | | COUPLING-M+ Ø12XØ19-FT100-MACHINED | 1 |
| 4.3 | 4234249 | CIRCLIP-FOR-SHAFT-D30x1.5 VP. | 1 |
| 4.2 | 2130977 | BALL BEARING 6206/ZZ-C3(HT)VP. | 1 |
| 4.4 | 4212716 | SCREW M6X20 KIT (4PIECES) | 1 |
| 4.5 | 4234250 | CIRCLIP-D62x2 VP. | 1 |
| 4.6 | 4234245 | O-RING 63X3 VP. | 1 |
| | | CONTACT-WASHER-6ETR-6,1x12,2x1,8-STEEL | 4 |

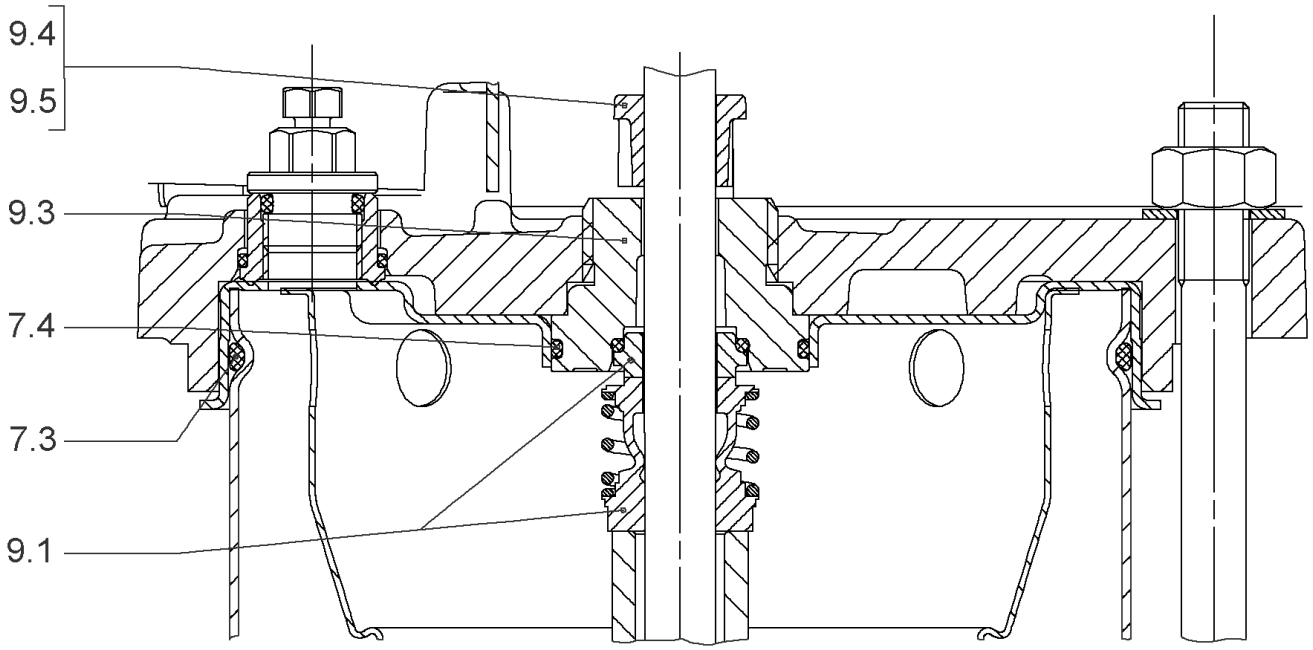
9.4
9.5
9.3
7.4
7.3
9.1

## SEAL-KIT-HELIX2-4 O/E KIT (4178564)

| Item | Article no. | Description | Quantity |
|---|---|---|---|
| 7.3 | 4176513 | O-RING FOR PUMP JACKET VP. | 1 |
| 7.4 | 2127603 | O-RING ID.37,6x2,4 EPDM VP. | 1 |
| 9.1 | 4178563 | M.SEAL.HELIX2-4 O/E VP. | 1 |
| 9.3 | 4178561 | RING HOLDER Ø22 1.4301 VP. | 1 |
| 9.5 | 4178562 | DRIVE RING D.22/12.2X10 MACH.VP. | 1 |
| 9.4 | 4176520 | SCREW CH M5x5 A4-70 ( 3PIECES ) | 1 |

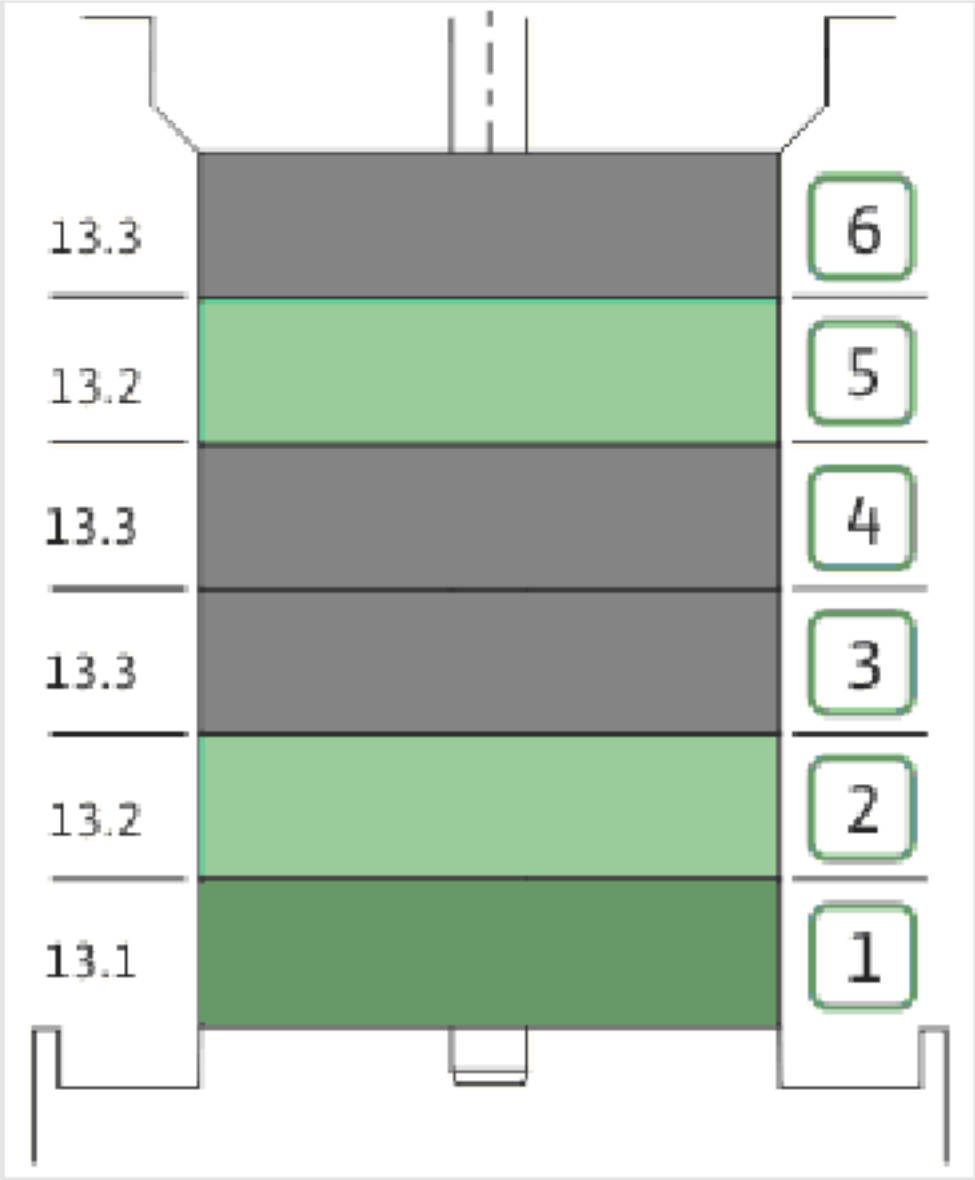
13.3
13.2
13.3
13.3
13.2
13.1
6
5
4
3
2
1

| Item | Article no. | Description | Quantity |
|---|---|---|---|
| 13.1 | 4179316 | STAGE HELIX 2 1.4301 KIT | 1 |
| | | > MACH.STG-CASING-WOGV-WNR-M+2-4-304 | 1 |
| | | > IMPELLER-M+2-304 | 1 |
| 13.2 | 4179317 | STAGE BEARING HELIX 2 1.4307 KIT | 1 |
| | | > MACH.BEARING-STG-CASING-WNR-M+2-304 | 1 |
| | | > IMPELLER-M+2-304 | 1 |
| | | > SHAFT SLEEVE SPACER Ø15,35x10,305-304 | 1 |
| | | > SHAFT-SLEEVE-D12xD16x14-CW | 1 |
| 13.3 | 4179319 | INTERMEDIATE STAGE HELIX 2 1.4301 KIT | 1 |
| | | > CORPS-ETG-STD-ACR-AJR-USIN.M+2-304 | 1 |
| | | > IMPELLER-M+2-304 | 1 |
| | | > IMPELLER SPACER Ø12,05X14,85-L24,285-304 | 1 |

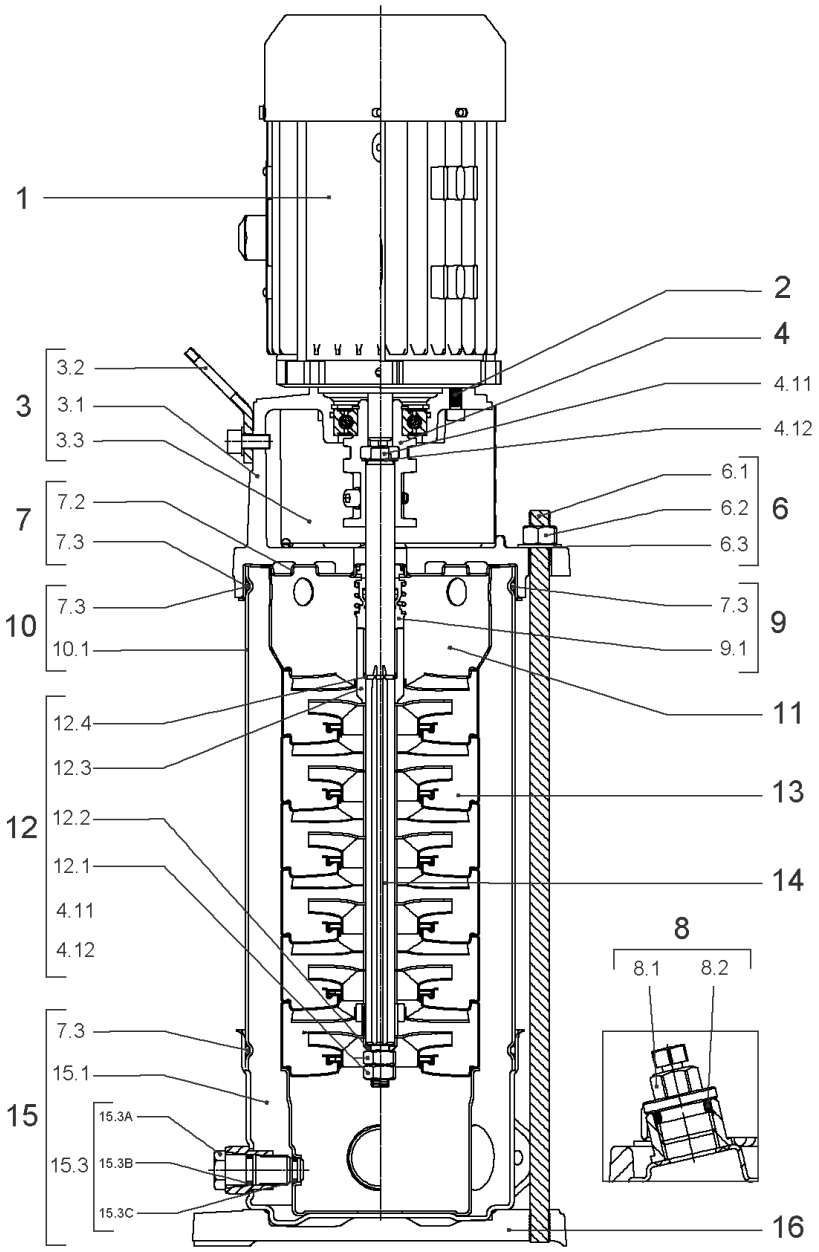
1
2
4
4.11
4.12
3
3.2
3.1
3.3
7
7.2
7.3
6
6.1
6.2
6.3
10
7.3
10.1
9
7.3
9.1
11
12
12.4
12.3
12.2
12.1
4.11
4.12
13
14
8
8.1
8.2
15
7.3
15.1
15.3
15.3A
15.3B
15.3C
16

## HELIX VE206-1/16/E/S (4201564)

| Item | Article no. | Description | Quantity |
|---|---|---|---|
| 1 | | DRIVE HELIX-VE206-IE4-WE KIT | 1 |
| Note: MOTOR BRAND WILO ELEC | | | |
| | | SPARE PARTS MOTOR:ON REQUEST | 1 |
| 2 | 4212716 | SCREW M6X20 KIT (4PIECES) | 1 |
| 3 | 4213752 | LANTERN FT100 HELIX KIT | 1 |
| 3.1 | | > LANT-MOT-VMI-ReDTC6"-FT100-MACHINED+CATA | 1 |
| 3.2 | 4184852 | > EYELET CPL.FT HELIX (2 PIECES) | 1 |
| 3.3 | 4213713 | > COUPLING PROTECTOR FT85/100 HELIX KIT | 1 |
| 4 | 4178578 | COUPLING D.12XD.19 FT100 KIT | 1 |
| 6 | 4177817 | STUD BOLT M12X341 KIT | 1 |
| 6.1 | | > TIE BOLT M12-341x18x30-1.4057 | 1 |
| 6.2 | 2094647 | > NUT M12 M12 ISO4032 VP. | 1 |
| 6.3 | 2123557 | > WASHER CS-12.4-24-1.6-NFE25 (4 PIECES) | 1 |
| 7 | 4212722 | STATIONARY RING HOLDER HELIX D23 ReDTC | 1 |
| 7.2 | 4212720 | > STATIONARY RING HOLDER HELIX D23 VP. | 1 |
| 7.3 | 4176513 | > O-RING FOR PUMP JACKET VP. | 1 |
| 8 | 4212724 | FILING/PURGING PLUG HELIX ReDTC KIT | 1 |
| 8.1 | | > FILLING PLUG MVI6"-304 | 1 |
| 8.2 | 4177800 | > O-RING EPDM PLUG HELIX VP. | 1 |
| 9 | 4212726 | MECH.SEAL HELIX V2/4 O/E ReDTC KIT | 1 |
| 9.1 | 4178563 | > M.SEAL.HELIX2-4 O/E VP. | 1 |
| 7.3 | 4176513 | > O-RING FOR PUMP JACKET VP. | 1 |
| 10 | 2127575 | HOUSING PIPE D.152x210 1.4301 KIT | 1 |
| 11 | 4179315 | CENTERING STAGE HELIX V2 1.4307 VP. | 1 |
| 12 | 4212729 | SHAFT EQUIPMENT HELIX V2/4 ReDTC KIT | 1 |
| 12.1 | | > NUT-H-M8-STAINLESS-STEEL A4-70 | 1 |
| 12.2 | | > SHAFT END WASHER Ø8/Ø12 316L | 1 |
| 12.3 | | > 1/2-SNAP-RING-2/4M3-316L | 1 |
| 12.4 | | > STOP-RUSH-1/2-D12xd2-M+316 | 1 |
| 4.11 | | > SCREW CHC-M6X14-8.8-ISO4762-GEOMET500A | 1 |
| 4.12 | | > WASHER D.24 L6U ZINK | 1 |
| 13 | | HYDRAULIC HELIX V 206 1.4307 | 1 |
| 14 | 4213748 | SHAFT D.12X281 HELIX 1.4057 VP. | 1 |
| 15 | 4174079 | PUMP HOUSING HELIX DN32 PN16 1.4301 KIT | 1 |

| Item | Article no. | Description | Quantity |
|---|---|---|---|
| 7.3 | 4176513 | > O-RING FOR PUMP JACKET VP. | 1 |
| 15.1 | | > BLASTING PPE HOUSING V-PN16-DN32-5"-304 | 1 |
| 15.2 | 4217889 | > COUNTER FLANGE-G1"-PN16-GJL KIT | 1 |
| 15.3 | 4171321 | > PRIMING/DRAIN PLUG EPDM HELIX KIT | 1 |
| 16 | 4177964 | BASEPLATE HELIX V2/4/6 PN16 VP. | 1 |

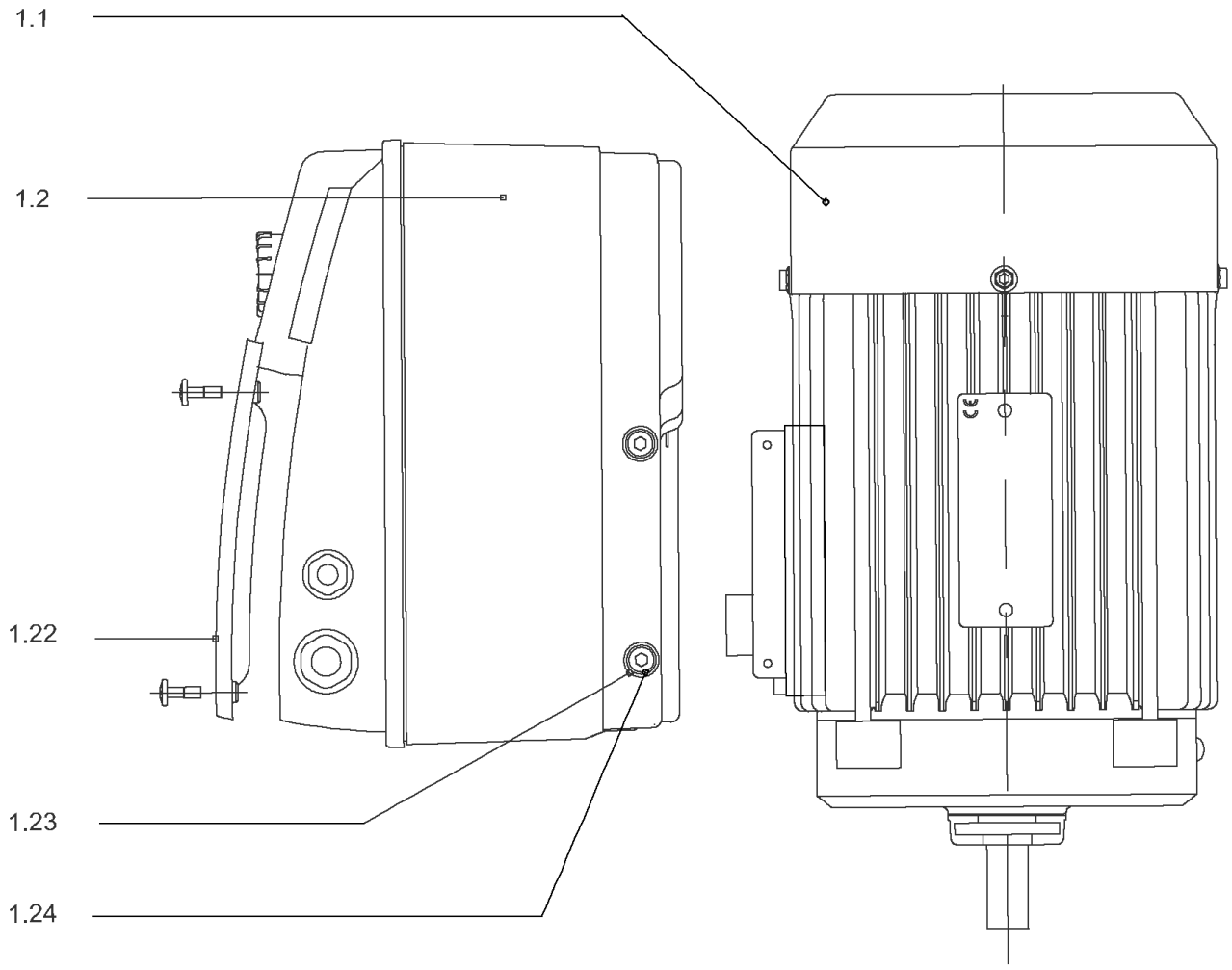
1.1
1.2
1.22
1.23
1.24

## DRIVE HELIX-VE206-IE4-WE KIT

| Item | Article no. | Description | Quantity |
|---|---|---|---|
| 1.1 | 4207914 | MOTOR 0.75/2/80 3~ 380V 60HZ IE4 WE VP. | 1 |
| | | SPARE PARTS MOTOR:ON REQUEST | 1 |
| 1.2 | 4209321 | MODULE HELIX-VE206-IE4-WE KIT | 1 |
| 1.22 | 2054372 | > MODULE COVER TL1,TL2+GASKET KIT | 1 |
| 1.23 | 4215716 | > SCREW M5X16 DIN912 8.8 A2A (4pieces) VP. | 1 |
| 1.24 | 2057978 | > RONDELLE A5,3 DIN6797 FST ZN (4 PIECES) | 1 |

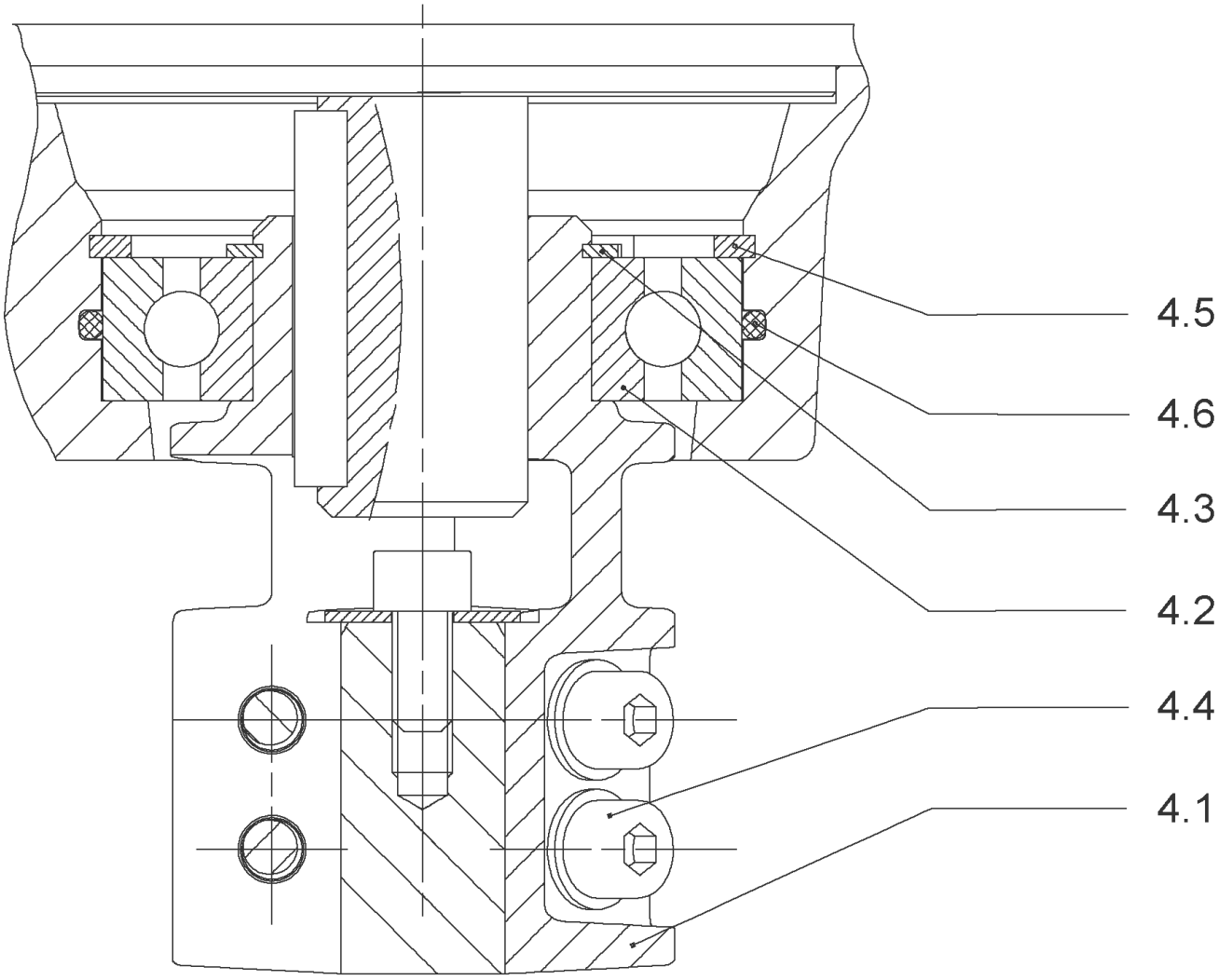
4.5
4.6
4.3
4.2
4.4
4.1

## COUPLING D.12XD.19 FT100 KIT (4178578)

| Item | Article no. | Description | Quantity |
|---|---|---|---|
| 4.1 | | COUPLING-M+ Ø12XØ19-FT100-MACHINED | 1 |
| 4.3 | 4234249 | CIRCLIP-FOR-SHAFT-D30x1.5 VP. | 1 |
| 4.2 | 2130977 | BALL BEARING 6206/ZZ-C3(HT)VP. | 1 |
| 4.4 | 4212716 | SCREW M6X20 KIT (4PIECES) | 1 |
| 4.5 | 4234250 | CIRCLIP-D62x2 VP. | 1 |
| 4.6 | 4234245 | O-RING 63X3 VP. | 1 |
| | | CONTACT-WASHER-6ETR-6,1x12,2x1,8-STEEL | 4 |

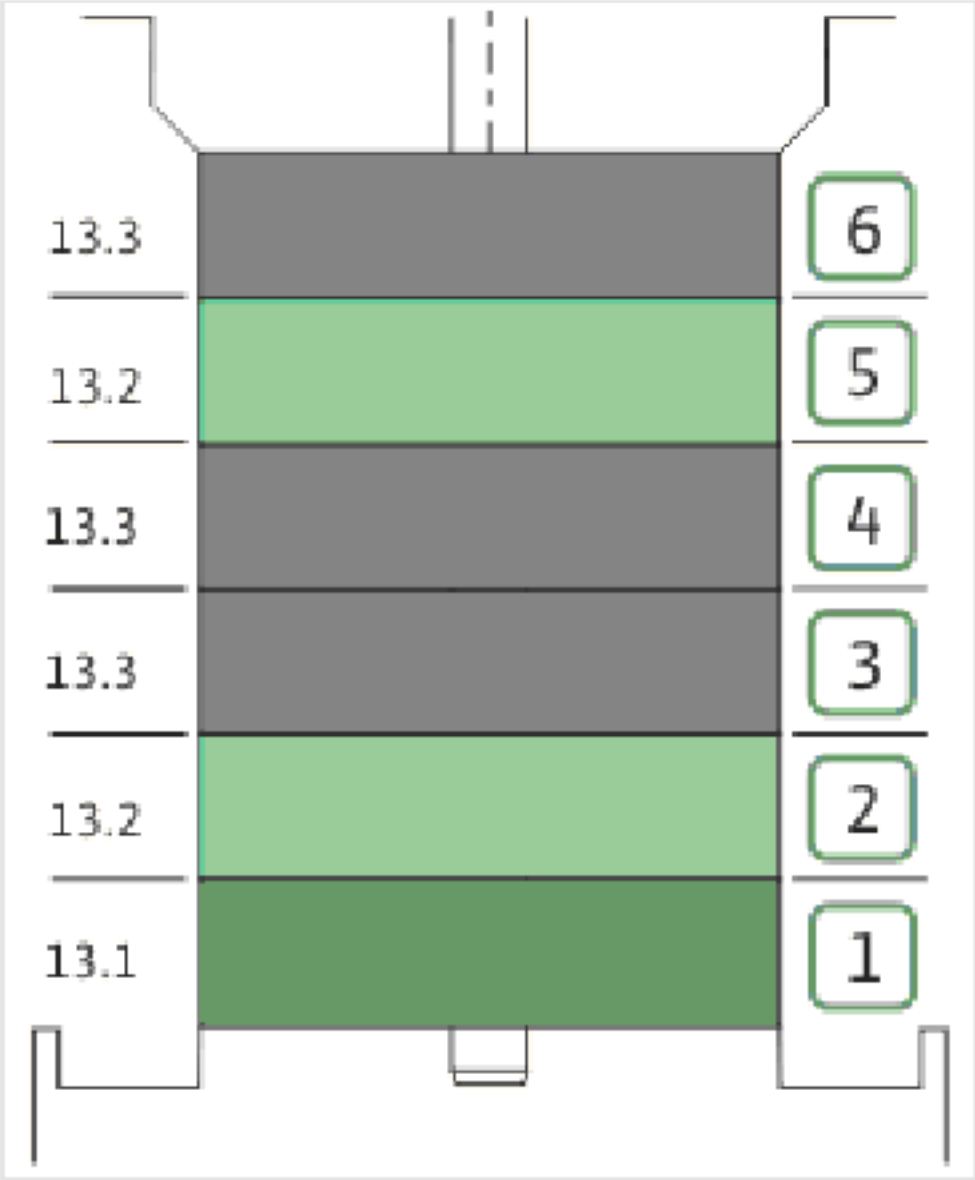
13.3
13.2
13.3
13.3
13.2
13.1
6
5
4
3
2
1

| Item | Article no. | Description | Quantity |
|---|---|---|---|
| 13.1 | 4179316 | STAGE HELIX 2 1.4301 KIT | 1 |
| | | > MACH.STG-CASING-WOGV-WNR-M+2-4-304 | 1 |
| | | > IMPELLER-M+2-304 | 1 |
| 13.2 | 4179317 | STAGE BEARING HELIX 2 1.4307 KIT | 1 |
| | | > MACH.BEARING-STG-CASING-WNR-M+2-304 | 1 |
| | | > IMPELLER-M+2-304 | 1 |
| | | > SHAFT SLEEVE SPACER Ø15,35x10,305-304 | 1 |
| | | > SHAFT-SLEEVE-D12xD16x14-CW | 1 |
| 13.3 | 4179319 | INTERMEDIATE STAGE HELIX 2 1.4301 KIT | 1 |
| | | > CORPS-ETG-STD-ACR-AJR-USIN.M+2-304 | 1 |
| | | > IMPELLER-M+2-304 | 1 |
| | | > IMPELLER SPACER Ø12,05X14,85-L24,285-304 | 1 |

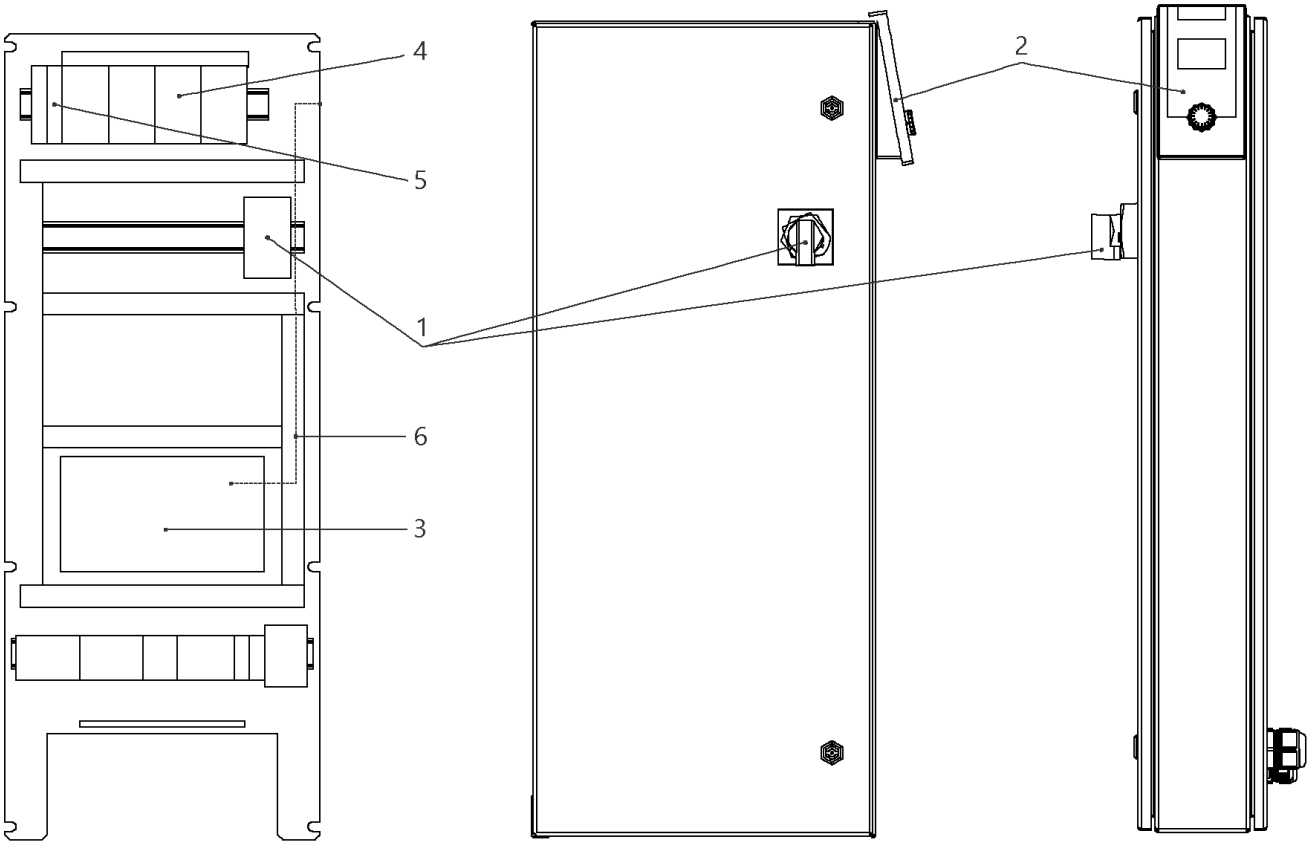
4
5
1
6
3
2

## W-CTRL-SCE-B-2x0,55-1,5KW-T4-FM-ND1

| Item | Article no. | Description | Quantity |
|---|---|---|---|
| 1 | 2104470 | MAIN SWITCH OT40F3 L250 KIT | 1 |
| 2 | 4184784 | CONTROL PANEL HMI SC KIT | 1 |
| 2 | 4185259 | ASSEMBLY DISPLAY SC PKG VP. | 1 |
| 3 | 4185257 | ASSEMBLY CPU SCe Booster VP. | 1 |
| 4 | 2051217 | AUTOM.CIRCUIT BREAKER S203 B16 TO7,5kW | 1 |
| 5 | 2046288 | CIRCUIT BREAKER S201 B16 | 1 |
| 6 | 4197081 | CABLE RJ45 CAT6 0,5M RED SC-PANEL VP. | 1 |

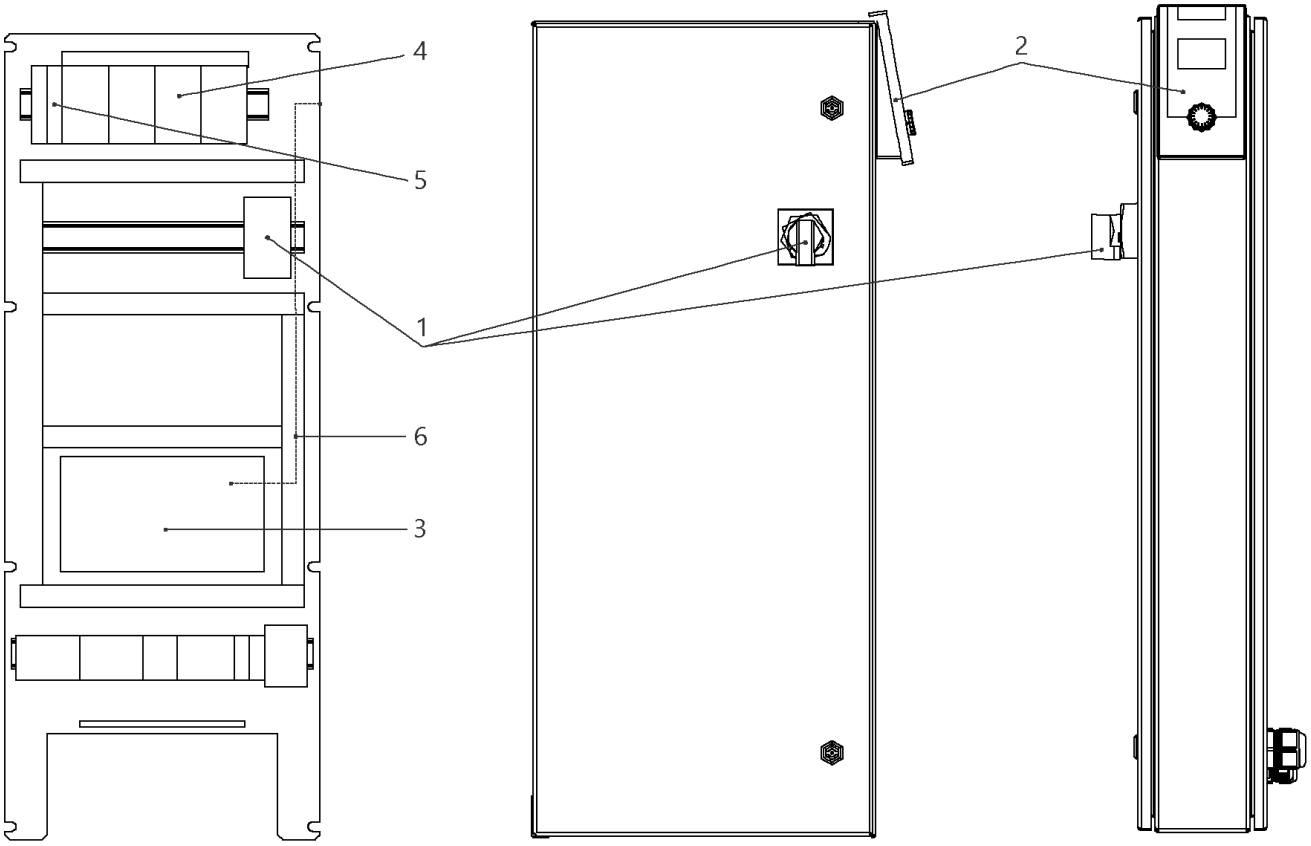
4
5
1
6
3
2

## W-CTRL-SCE-B-2x10A-T34-FM-ND1-AVC-PKG (2541913)

| Item | Article no. | Description | Quantity |
|---|---|---|---|
| 1 | 2104470 | MAIN SWITCH OT40F3 L250 KIT | 1 |
| 2 | 4184784 | CONTROL PANEL HMI SC KIT | 1 |
| 2 | 4185259 | ASSEMBLY DISPLAY SC PKG VP. | 1 |
| Note: DISPLAY ALONE / PLATINE SEULE | | | |
| 3 | 4185257 | ASSEMBLY CPU SCe Booster VP. | 1 |
| 4 | 2119861 | AUTOMATIC CIRCUIT BREAKER S203 B13 3POL. | 1 |
| 5 | 2046288 | CIRCUIT BREAKER S201 B16 | 1 |
| 6 | 4197081 | CABLE RJ45 CAT6 0,5M RED SC-PANEL VP. | 1 |

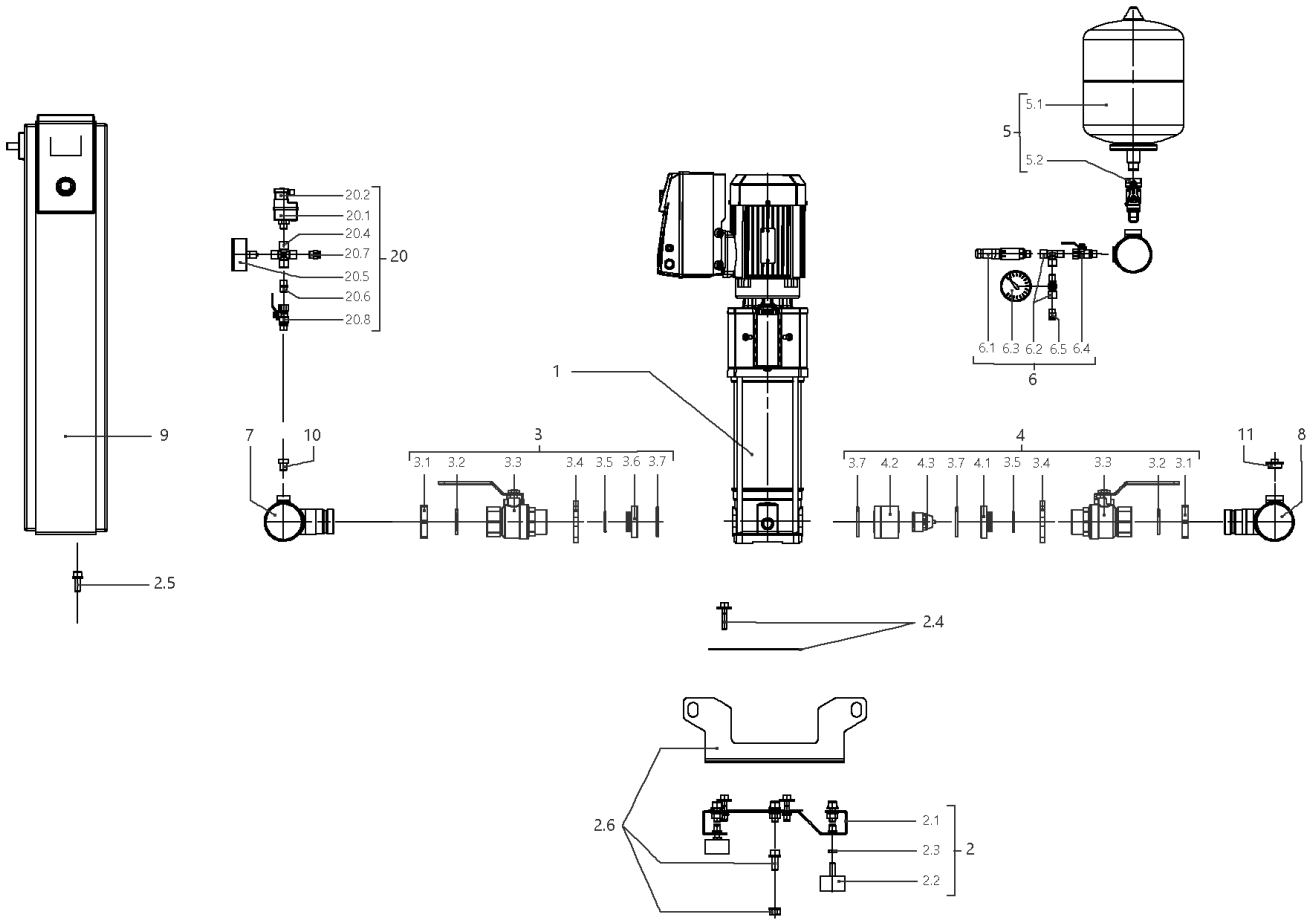
5.1
5
5.2
20.2
20.1
20.4
20.7
20
20.5
20.6
20.8
6.1 6.3 6.2 6.5 6.4
6
1
9
7
10
3
3.1 3.2 3.3 3.4 3.5 3.6 3.7
4
3.7 4.2 4.3 3.7 4.1 3.5 3.4 3.3 3.2 3.1
11
8
2.5
2.4
2.6
2.1
2.3
2
2.2

## SiBoost Smart 2HELIX VE208 (2541586)

| Item | Article no. | Description | Quantity |
|---|---|---|---|
| 1 | | HELIX VE208-1/16/E/S | 1 |
| Note: TO / BIS / JUSQU'AU 29/02/2016 | | | |
| 1 | 4201565 | HELIX VE208-1/16/E/S | 1 |
| Note: FROM / AB / À PARTIR DU 01/03/2016 | | | |
| 2 | 4199874 | BASE PLATE DE2 850x300 M10 KIT | 1 |
| 2.1 | | > BASEPLATE_2x4/6/10V_E300_850x300_BOX_150 | 1 |
| 2.2 | 2028654 | > VIBRATION DAMPER D.50X30 M10X28 | 1 |
| 2.3 | 2028281 | > NUT M10 DIN936 (ISO4035) 17H VZ | 1 |
| 2.4 | 4199875 | > HOLDER PUMP Siboost Helix V2/4 KIT | 1 |
| 2.5 | 4197084 | > HOLDER SWITCHBOX WILO Smart Control KIT | 1 |
| 2.6 | 4197085 | > LIFTING Siboost HELIX SC KIT | 1 |
| 3 | 4199876 | SUCTION SIDE Siboost Helix V2/4/6 KIT | 1 |
| 3.1 | 2032610 | > NUT G11/4 MS VP. | 1 |
| 3.2 | 2032611 | > O-RING ID.36,09X3,53N DIN3771 E7502 | 1 |
| 3.3 | 2507646 | > BALL VALVE G11/4"M-F-W.HANDLE 1/4-TURN | 1 |
| 3.4 | 2032613 | > SCREWED FLANGE G1 1/4" LK-75 ST37VZ | 1 |
| 3.5 | 2032614 | > O-RING ID.29,82X2,62N DIN3771 E7502 | 1 |
| 3.6 | 2032615 | > SPACER F.I/A KUH.DN32 CUZN | 1 |
| 3.7 | 2032616 | > O-RING ID.44X3,53N DIN3771 E7502 | 1 |
| 4 | 4199877 | DELIVERY SIDE Siboost Helix V2/4/6 KIT | 1 |
| 3.1 | 2032610 | > NUT G11/4 MS VP. | 1 |
| 3.2 | 2032611 | > O-RING ID.36,09X3,53N DIN3771 E7502 | 1 |
| 3.3 | 2507646 | > BALL VALVE G11/4"M-F-W.HANDLE 1/4-TURN | 1 |
| 3.4 | 2032613 | > SCREWED FLANGE G1 1/4" LK-75 ST37VZ | 1 |
| 3.5 | 2032614 | > O-RING ID.29,82X2,62N DIN3771 E7502 | 1 |
| 4.1 | 2058116 | > SPACER F.I/A KUH.DN32 CUZN | 1 |
| 3.7 | 2032616 | > O-RING ID.44X3,53N DIN3771 E7502 | 1 |
| 4.2 | 2058115 | > HOUSING RFV(RV-IN) DN32 SGS/DRS | 1 |
| 4.3 | 2027870 | > NON-RETURN-DEVICE INSERT DN32(MTR) | 1 |
| 5 | 2032642 | DIAPHREM TANK 8L/PN16 DIN4807/T5 KIT | 1 |
| 5.1 | 2045914 | > DIAPHREM TANK 8L TYP-DD 16BAR | 1 |
| 5.2 | 2027853 | > FLOW FITTING G3/4 FOR DIAPHRAGM VES. | 1 |
| 6 | 4197076 | PRESSURE SENSOR/ GAUGE 0-16BAR KIT | 1 |
| 6.1 | 2085909 | > PRESS.SENSOR 1/4" 0-16BAR 4-20MA VP. | 1 |

| Item | Article no. | Description | Quantity |
|---|---|---|---|
| 6.2 | 4197077 | > T-PIECE 1/4" VP. | 1 |
| 6.3 | 2028692 | > PRESSURE GAUGE NG63-PN16-G1/4 | 1 |
| 6.4 | 2028291 | > BALL TAP R1/4" PN42 GIACOMINI R254DL | 1 |
| 6.5 | 2028691 | > BLOWGUN 1/4" MS 30BAR VP. | 1 |
| 7 | 4199878 | PIPE DE2 11/2''-2x11/4"+1x1/4x600 VP. | 1 |
| 8 | 4199879 | PIPE DE2 11/2''-2x11/4"+1x1/4+1x3/4x600 | 1 |
| 9 | | W-CTRL-SCE-B-2x0,55-1,5KW-T4-FM-ND1 | 1 |
| Note: TO / BIS / JUSQU'AU 18/05/2014 | | | |
| 9 | 2541913 | W-CTRL-SCE-B-2x10A-T34-FM-ND1-AVC-PKG | 1 |
| Note: FROM / AB / À PARTIR DU 19/05/2014 | | | |
| 10 | 4197079 | PLUG G1/4"x10 AISI304 KIT | 1 |
| 11 | 2032654 | PLUG R3/4" MS VIEGA 1751 | 1 |
| 20 | | ASSEMBLY WMS. DE-EB. +VP | 1 |
| 20.1 | 2028652 | > PRESSURE SWITCH PS3-ASR 1/(1,3) VP. | 1 |
| 20.2 | 2130983 | > PLUG PS3-415 WITH KABEL 1,5M 2NO VP. | 1 |
| 20.4 | 2028290 | > CROSSPIECE R1/4" MS-NICKEL | 1 |
| 20.5 | 2028687 | > PRESSURE GAUGE NG63 R1/4" HI.0-6BAR | 1 |
| 20.6 | 2054268 | > DUAL NIPPLE G1/4" x G1/4" MS VP. | 1 |
| 20.7 | 2028691 | > BLOWGUN 1/4" MS 30BAR VP. | 1 |
| 20.8 | 2028291 | > BALL TAP R1/4" PN42 GIACOMINI R254DL | 1 |

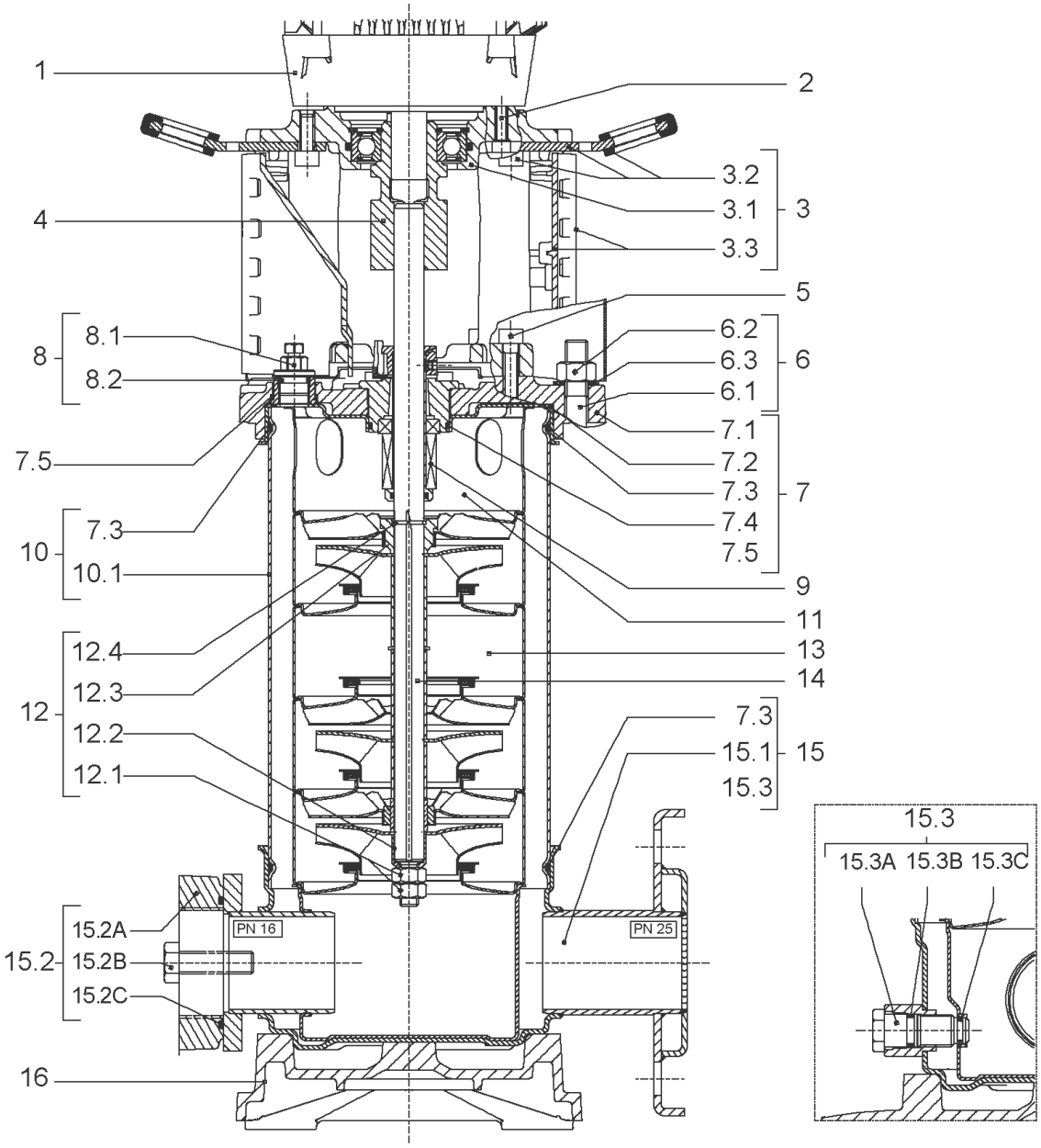
1
2
3.2
3.1
3
3.3
4
5
8.1
8
8.2
6.2
6.3
6
6.1
7.1
7.5
7.2
7.3
7
7.4
7.3
10
7.5
10.1
9
11
12.4
13
12.3
14
12
12.2
7.3
15.1
15
12.1
15.3
15.3
15.3A 15.3B 15.3C
15.2A
PN 16
PN 25
15.2
15.2B
15.2C
16

| Item | Article no. | Description | Quantity |
|---|---|---|---|
| 1 | | DRIVE HELIX-VE208-IE2-WE KIT | 1 |
| Note: MOTOR BRAND WILO ELEC | | | |
| 1 | | DRIVE HELIX-VE208-IE4-WE KIT | 1 |
| Note: MOTOR BRAND WILO ELEC | | | |
| 2 | 4159702 | SCREW M6X30 (4 PIECES) | 1 |
| 3 | 4172790 | EQUIPED LANTERN NEXIS FT 100 KIT | 1 |
| 3.1 | | > M+5_6_LANTERN_ONE-PIECE_FT100_CATA | 1 |
| 3.2 | 2127604 | > EYELET CPL.FT HELIX(2 PIECES) | 1 |
| 3.3 | 4159692 | > COUPLING PROTECTOR FT HELIX KIT | 1 |
| 4 | 4178578 | COUPLING D.12XD.19 FT100 KIT | 1 |
| 5 | 4159707 | SCREW M8X30 (4 PIECES) | 1 |
| 6 | 2018365 | STUD BOLT M12X392 KIT | 1 |
| 7 | 4210143 | STATIONARY RING HOLDER HELIX 6" EPDM | 1 |
| 7.2 | 2127607 | > STATIONARY RING HOLDER 6" HELIX 1.4301 V | 1 |
| 7.3 | 4176513 | > O-RING FOR PUMP JACKET VP. | 1 |
| 7.4 | 2127603 | > O-RING ID.37,6x2,4 EPDM VP. | 1 |
| 7.5 | 2127602 | > O-RING ID.21,35x2 EPDM VP. | 1 |
| 8 | 4159686 | FILING/PURGING PLUG HELIX EPDM KIT | 1 |
| 9 | 4178564 | SEAL-KIT-HELIX2-4 O/E KIT | 1 |
| 10 | 2127576 | HOUSING PIPE D.152x260 1.4301 KIT | 1 |
| 11 | 4179315 | CENTERING STAGE HELIX V2 1.4307 VP. | 1 |
| 12 | 4178568 | SHAFT EQUIPMENT HELIX V2/V4 KIT | 1 |
| 12.1 | | > NUT-H-M8-STAINLESS-STEEL A4-70 | 2 |
| 12.2 | | > SHAFT END WASHER Ø8/Ø12 316L | 1 |
| 12.3 | | > STOP COLLAR OF IMPELLER M+2/4 SINGLEBLOC | 1 |
| 12.4 | | > STOP-RUSH-1/2-D12xd2-M+316 | 2 |
| 13 | | HYDRAULIC HELIX V 208 1.4307 | 1 |
| 14 | 4178592 | SHAFT D.12X383 1.4301 VP. | 1 |
| 15 | 4174079 | PUMP HOUSING HELIX DN32 PN16 1.4301 KIT | 1 |
| 7.3 | 4176513 | > O-RING FOR PUMP JACKET VP. | 1 |
| 15.1 | | > BLASTING PPE HOUSING V-PN16-DN32-5"-304 | 1 |
| 15.2 | 4217889 | > COUNTER FLANGE-G1"-PN16-GJL KIT | 1 |
| 15.3 | 4171321 | > PRIMING/DRAIN PLUG EPDM HELIX KIT | 1 |
| 16 | 4177964 | BASEPLATE HELIX V2/4/6 PN16 VP. | 1 |

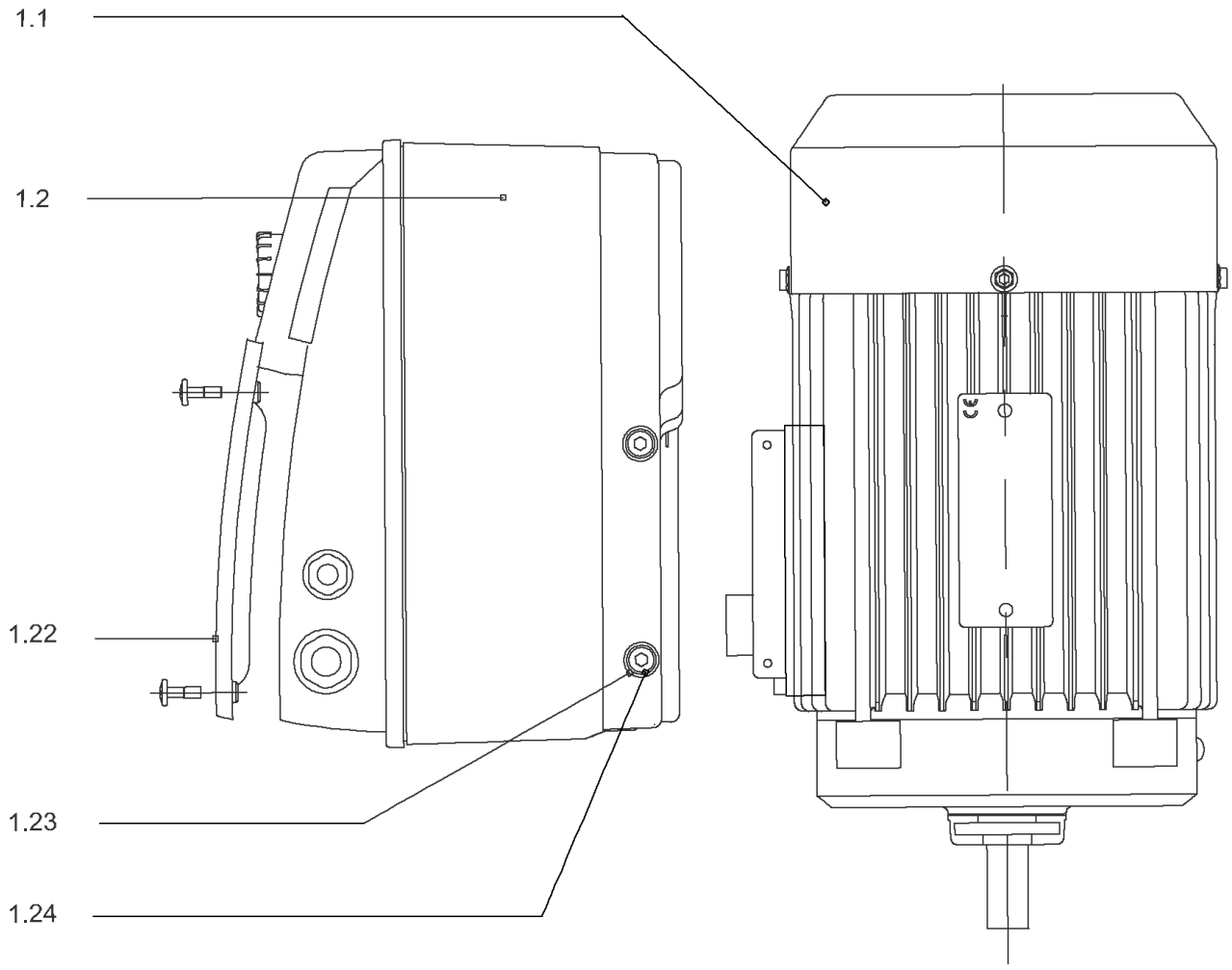
1.1
1.2
1.22
1.23
1.24

## DRIVE HELIX-VE208-IE2-WE KIT

| Item | Article no. | Description | Quantity |
|---|---|---|---|
| 1.1 | 4184817 | MOTOR 1,1/2/80 3~ 380V 60HZ IE2 WE VP. | 1 |
| | | SPARE PARTS MOTOR:ON REQUEST | 1 |
| 1.2 | 4186222 | MODULEHELIX-VE208-IE2-WE KIT | 1 |
| 1.22 | 2054372 | > MODULE COVER TL1,TL2+GASKET KIT | 1 |
| 1.23 | 4215716 | > SCREW M5X16 DIN912 8.8 A2A (4pieces) VP. | 1 |
| 1.24 | 2057978 | > RONDELLE A5,3 DIN6797 FST ZN (4 PIECES) | 1 |

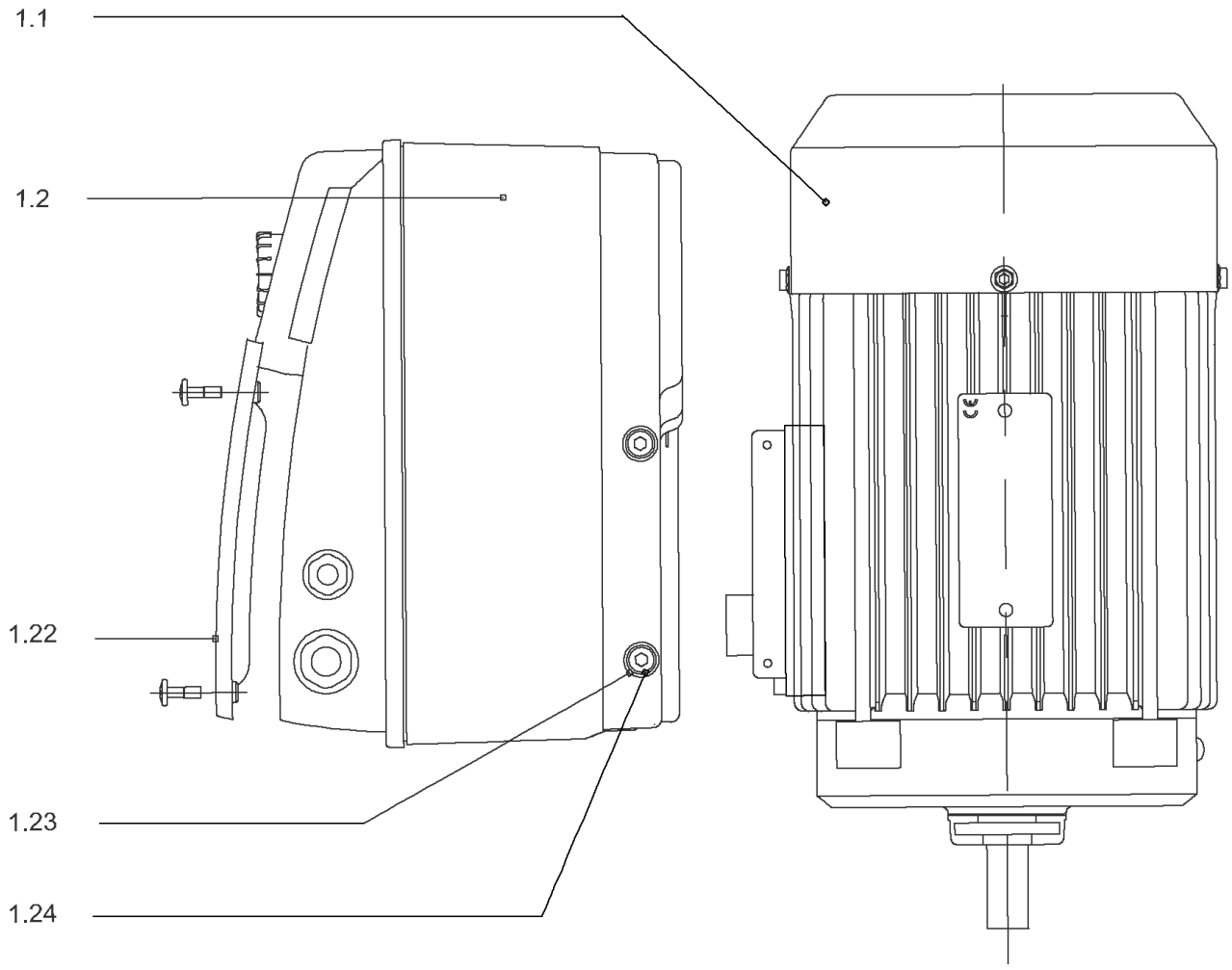
1.1
1.2
1.22
1.23
1.24

## DRIVE HELIX-VE208-IE4-WE KIT

| Item | Article no. | Description | Quantity |
|---|---|---|---|
| 1.1 | 4207916 | MOTOR 1.1/2/80 3~ 380V 60HZ IE4 WE VP. | 1 |
| | | SPARE PARTS MOTOR:ON REQUEST | 1 |
| 1.2 | 4209597 | MODULE HELIX-VE208-IE4-WE KIT | 1 |
| 1.22 | 2054372 | > MODULE COVER TL1,TL2+GASKET KIT | 1 |
| 1.23 | 4215716 | > SCREW M5X16 DIN912 8.8 A2A (4pieces) VP. | 1 |
| 1.24 | 2057978 | > RONDELLE A5,3 DIN6797 FST ZN (4 PIECES) | 1 |

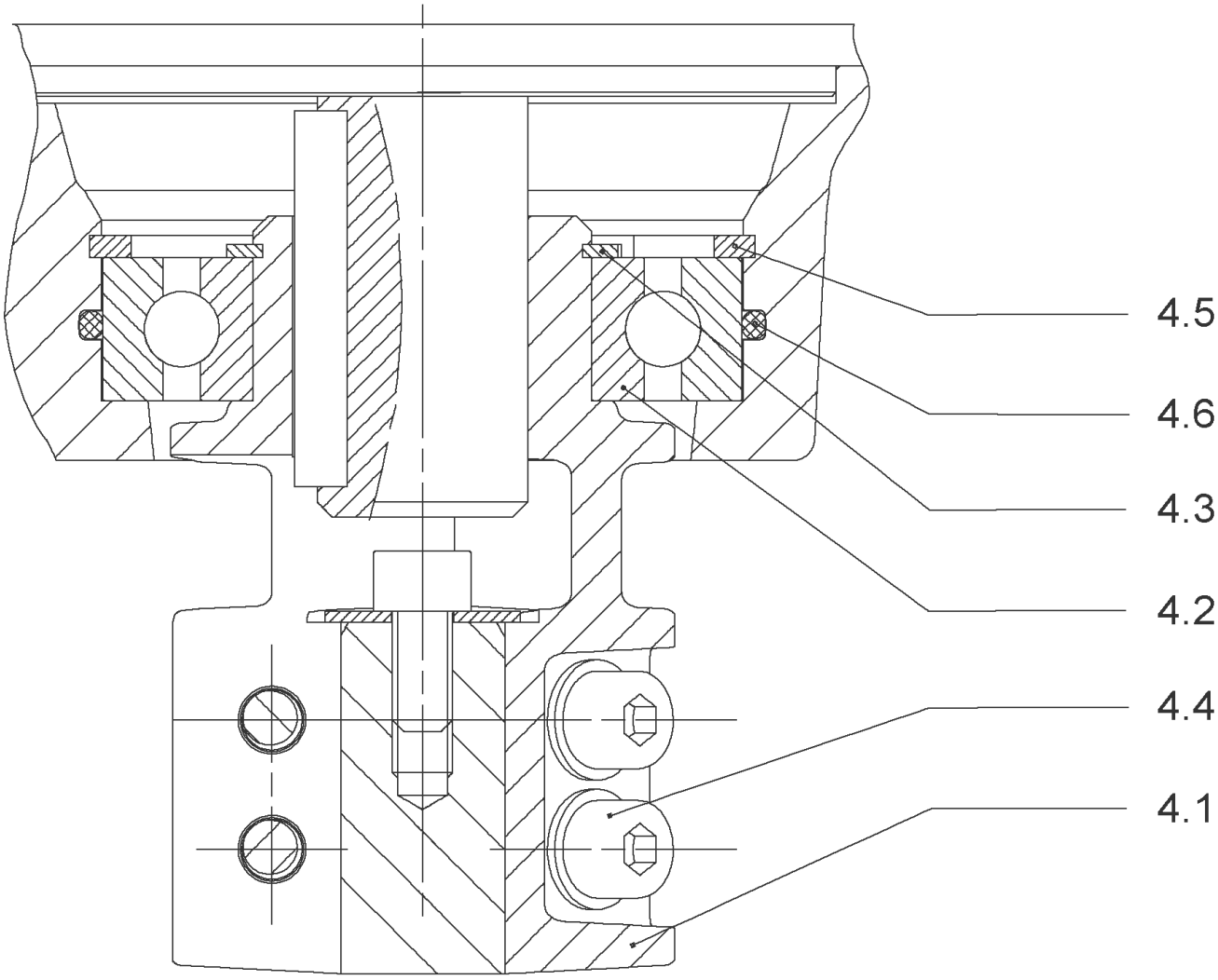
4.5
4.6
4.3
4.2
4.4
4.1

## COUPLING D.12XD.19 FT100 KIT (4178578)

| Item | Article no. | Description | Quantity |
|---|---|---|---|
| 4.1 | | COUPLING-M+ Ø12XØ19-FT100-MACHINED | 1 |
| 4.3 | 4234249 | CIRCLIP-FOR-SHAFT-D30x1.5 VP. | 1 |
| 4.2 | 2130977 | BALL BEARING 6206/ZZ-C3(HT)VP. | 1 |
| 4.4 | 4212716 | SCREW M6X20 KIT (4PIECES) | 1 |
| 4.5 | 4234250 | CIRCLIP-D62x2 VP. | 1 |
| 4.6 | 4234245 | O-RING 63X3 VP. | 1 |
| | | CONTACT-WASHER-6ETR-6,1x12,2x1,8-STEEL | 4 |

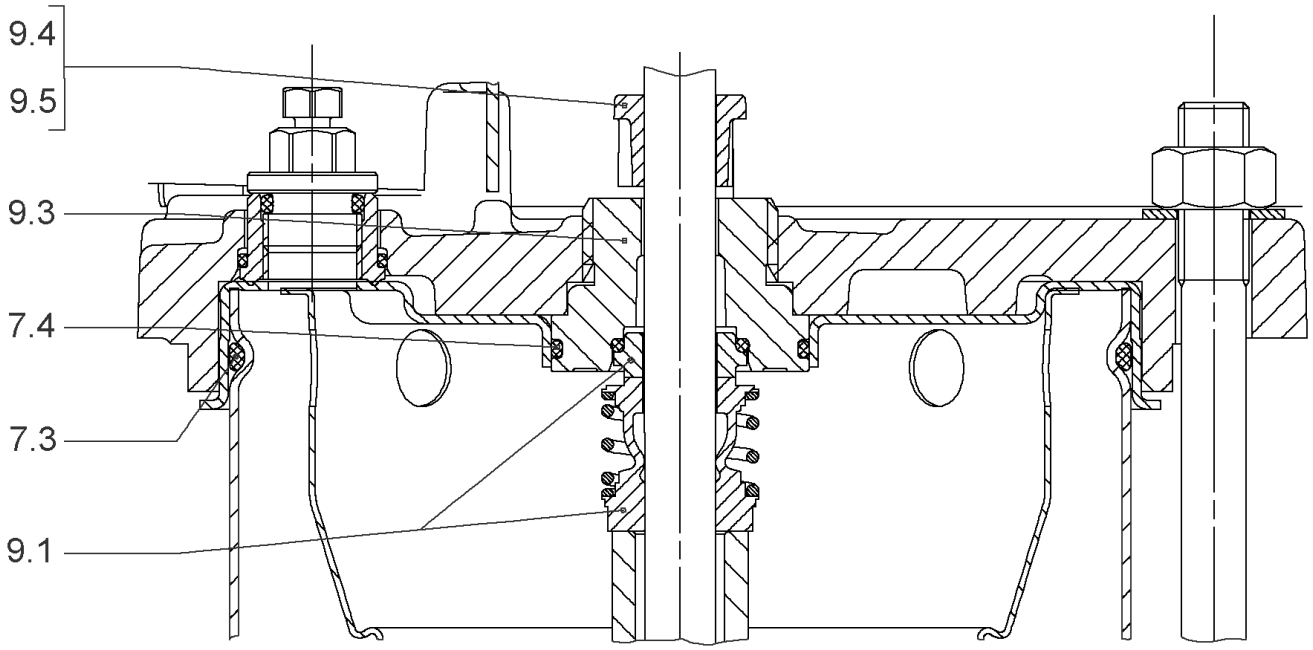
9.4
9.5
9.3
7.4
7.3
9.1

## SEAL-KIT-HELIX2-4 O/E KIT (4178564)

| Item | Article no. | Description | Quantity |
|---|---|---|---|
| 7.3 | 4176513 | O-RING FOR PUMP JACKET VP. | 1 |
| 7.4 | 2127603 | O-RING ID.37,6x2,4 EPDM VP. | 1 |
| 9.1 | 4178563 | M.SEAL.HELIX2-4 O/E VP. | 1 |
| 9.3 | 4178561 | RING HOLDER Ø22 1.4301 VP. | 1 |
| 9.5 | 4178562 | DRIVE RING D.22/12.2X10 MACH.VP. | 1 |
| 9.4 | 4176520 | SCREW CH M5x5 A4-70 ( 3PIECES ) | 1 |

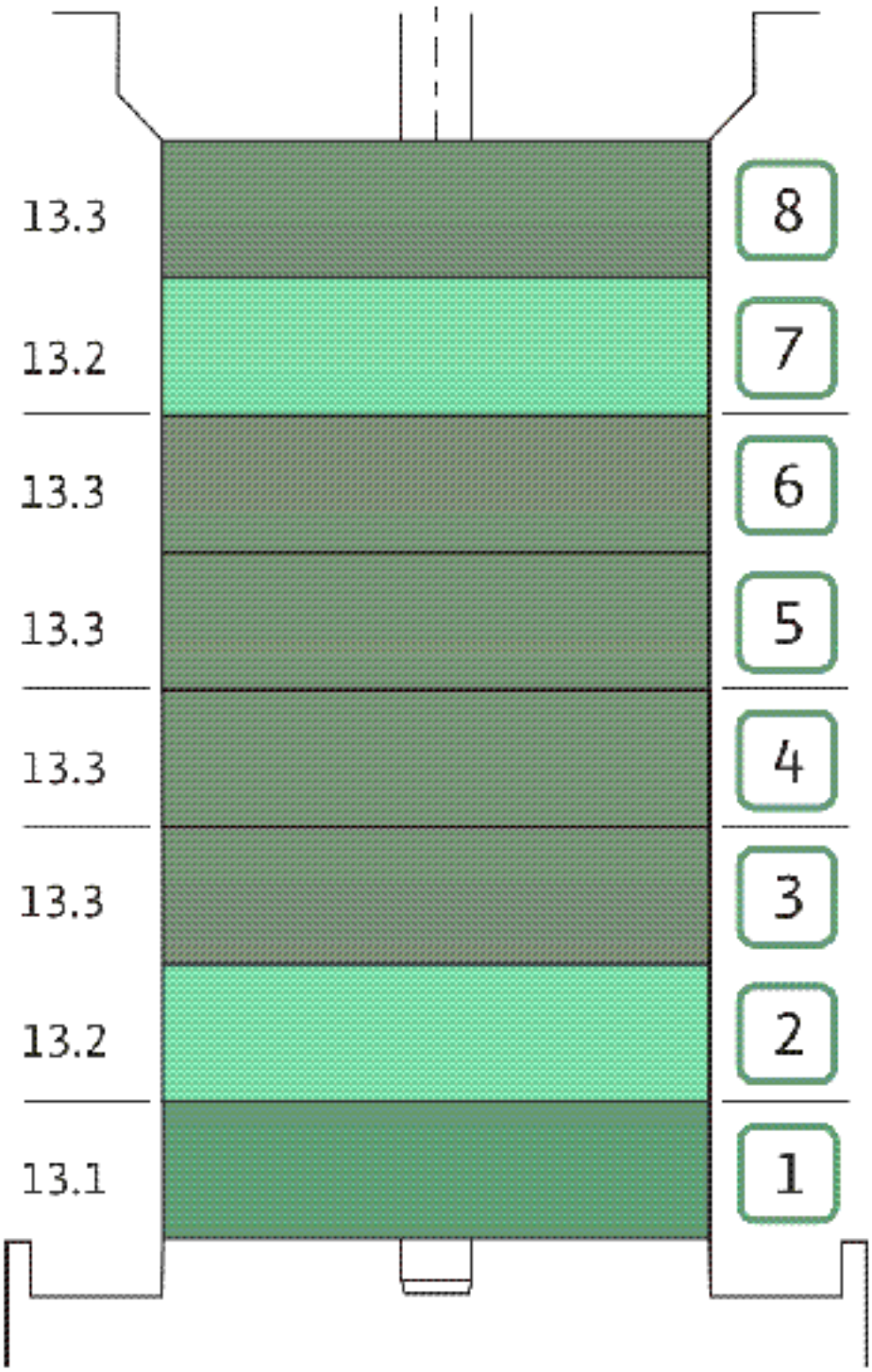
13.3
13.2
13.3
13.3
13.3
13.3
13.2
13.1
8
7
6
5
4
3
2
1

| Item | Article no. | Description | Quantity |
|---|---|---|---|
| 13.1 | 4179316 | STAGE HELIX 2 1.4301 KIT | 1 |
| | | > MACH.STG-CASING-WOGV-WNR-M+2-4-304 | 1 |
| | | > IMPELLER-M+2-304 | 1 |
| 13.2 | 4179317 | STAGE BEARING HELIX 2 1.4307 KIT | 1 |
| | | > MACH.BEARING-STG-CASING-WNR-M+2-304 | 1 |
| | | > IMPELLER-M+2-304 | 1 |
| | | > SHAFT SLEEVE SPACER Ø15,35x10,305-304 | 1 |
| | | > SHAFT-SLEEVE-D12xD16x14-CW | 1 |
| 13.3 | 4179319 | INTERMEDIATE STAGE HELIX 2 1.4301 KIT | 1 |
| | | > CORPS-ETG-STD-ACR-AJR-USIN.M+2-304 | 1 |
| | | > IMPELLER-M+2-304 | 1 |
| | | > IMPELLER SPACER Ø12,05X14,85-L24,285-304 | 1 |

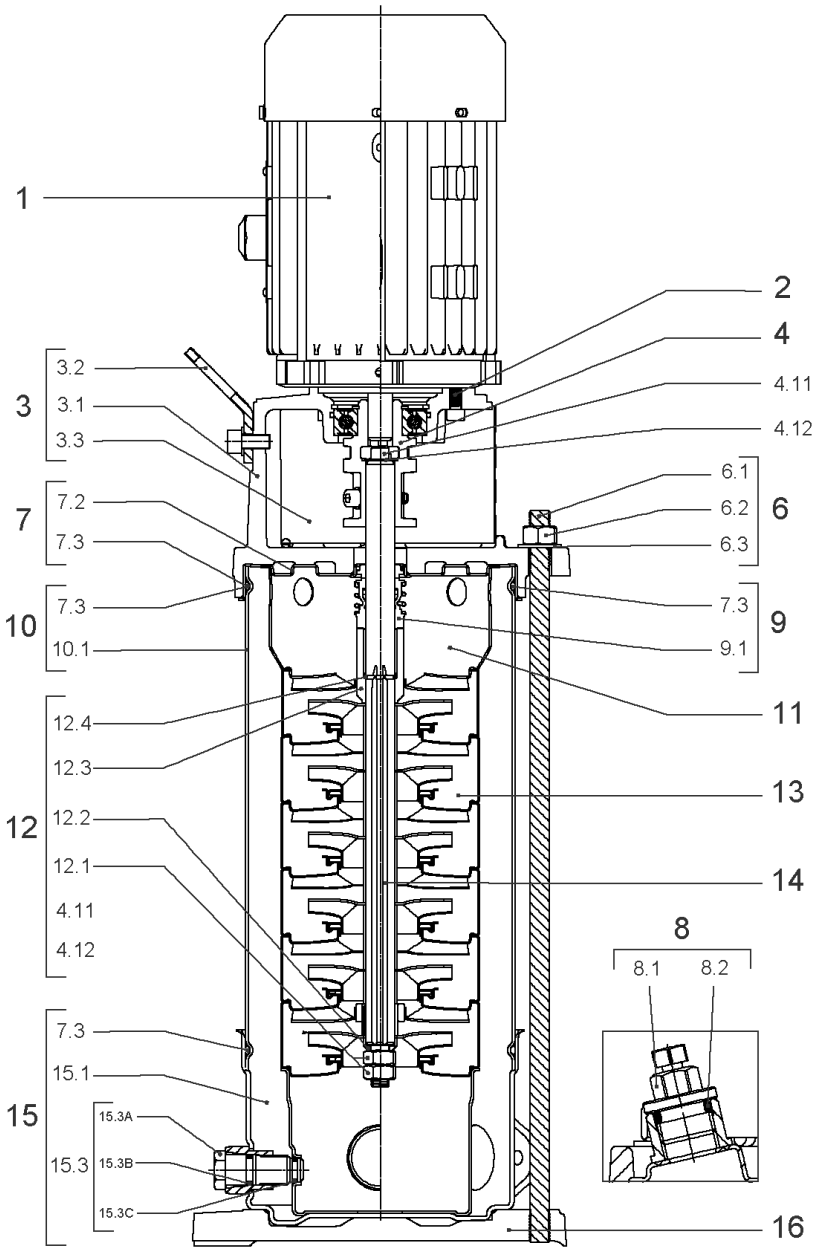
1
2
4
4.11
4.12
3
3.2
3.1
3.3
7
7.2
7.3
6
6.1
6.2
6.3
10
7.3
10.1
9
7.3
9.1
11
12
12.4
12.3
12.2
12.1
4.11
4.12
13
14
8
8.1
8.2
15
7.3
15.1
15.3
15.3A
15.3B
15.3C
16

## HELIX VE208-1/16/E/S (4201565)

| Item | Article no. | Description | Quantity |
|---|---|---|---|
| 1 | | DRIVE HELIX-VE208-IE4-WE KIT | 1 |
| Note: MOTOR BRAND WILO ELEC | | | |
| | | SPARE PARTS MOTOR:ON REQUEST | 1 |
| 2 | 4212716 | SCREW M6X20 KIT (4PIECES) | 1 |
| 3 | 4213752 | LANTERN FT100 HELIX KIT | 1 |
| 3.1 | | > LANT-MOT-VMI-ReDTC6"-FT100-MACHINED+CATA | 1 |
| 3.2 | 4184852 | > EYELET CPL.FT HELIX (2 PIECES) | 1 |
| 3.3 | 4213713 | > COUPLING PROTECTOR FT85/100 HELIX KIT | 1 |
| 4 | 4178578 | COUPLING D.12XD.19 FT100 KIT | 1 |
| 6 | 2018365 | STUD BOLT M12X392 KIT | 1 |
| 7 | 4212722 | STATIONARY RING HOLDER HELIX D23 ReDTC | 1 |
| 7.2 | 4212720 | > STATIONARY RING HOLDER HELIX D23 VP. | 1 |
| 7.3 | 4176513 | > O-RING FOR PUMP JACKET VP. | 1 |
| 8 | 4212724 | FILING/PURGING PLUG HELIX ReDTC KIT | 1 |
| 8.1 | | > FILLING PLUG MVI6"-304 | 1 |
| 8.2 | 4177800 | > O-RING EPDM PLUG HELIX VP. | 1 |
| 9 | 4212726 | MECH.SEAL HELIX V2/4 O/E ReDTC KIT | 1 |
| 9.1 | 4178563 | > M.SEAL.HELIX2-4 O/E VP. | 1 |
| 7.3 | 4176513 | > O-RING FOR PUMP JACKET VP. | 1 |
| 10 | 2127576 | HOUSING PIPE D.152x260 1.4301 KIT | 1 |
| 11 | 4179315 | CENTERING STAGE HELIX V2 1.4307 VP. | 1 |
| 12 | 4212729 | SHAFT EQUIPMENT HELIX V2/4 ReDTC KIT | 1 |
| 12.1 | | > NUT-H-M8-STAINLESS-STEEL A4-70 | 1 |
| 12.2 | | > SHAFT END WASHER Ø8/Ø12 316L | 1 |
| 12.3 | | > 1/2-SNAP-RING-2/4M3-316L | 1 |
| 12.4 | | > STOP-RUSH-1/2-D12xd2-M+316 | 1 |
| 4.11 | | > SCREW CHC-M6X14-8.8-ISO4762-GEOMET500A | 1 |
| 4.12 | | > WASHER D.24 L6U ZINK | 1 |
| 13 | | HYDRAULIC HELIX V 208 1.4307 | 1 |
| 14 | 4213754 | SHAFT D.12X331 HELIX 1.4057 VP. | 1 |
| 15 | 4174079 | PUMP HOUSING HELIX DN32 PN16 1.4301 KIT | 1 |
| 7.3 | 4176513 | > O-RING FOR PUMP JACKET VP. | 1 |
| 15.1 | | > BLASTING PPE HOUSING V-PN16-DN32-5"-304 | 1 |
| 15.2 | 4217889 | > COUNTER FLANGE-G1"-PN16-GJL KIT | 1 |

| Item | Article no. | Description | Quantity |
|---|---|---|---|
| 15.3 | 4171321 | > PRIMING/DRAIN PLUG EPDM HELIX KIT | 1 |
| 16 | 4177964 | BASEPLATE HELIX V2/4/6 PN16 VP. | 1 |

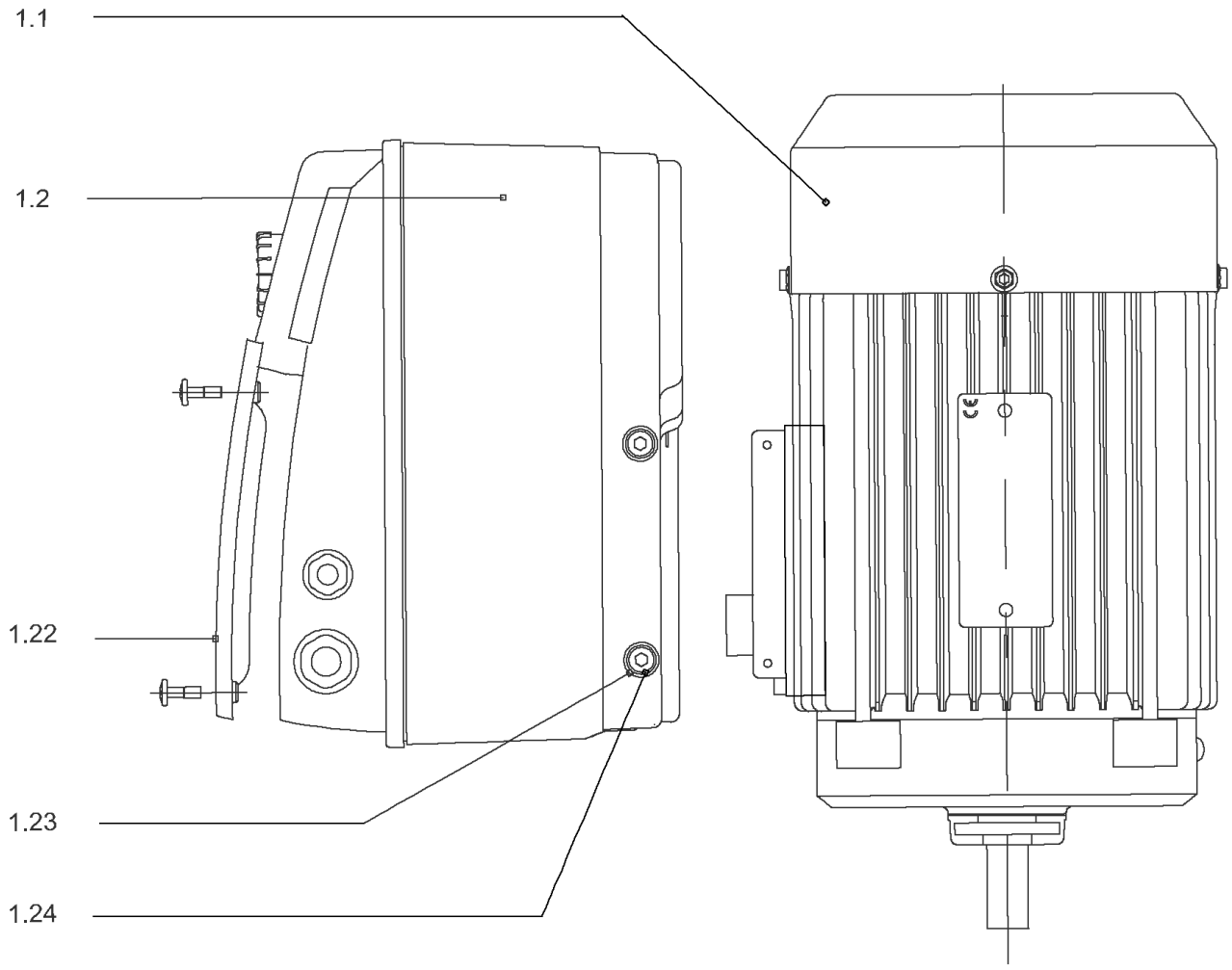
1.1
1.2
1.22
1.23
1.24

## DRIVE HELIX-VE208-IE4-WE KIT

| Item | Article no. | Description | Quantity |
|---|---|---|---|
| 1.1 | 4207916 | MOTOR 1.1/2/80 3~ 380V 60HZ IE4 WE VP. | 1 |
| | | SPARE PARTS MOTOR:ON REQUEST | 1 |
| 1.2 | 4209597 | MODULE HELIX-VE208-IE4-WE KIT | 1 |
| 1.22 | 2054372 | > MODULE COVER TL1,TL2+GASKET KIT | 1 |
| 1.23 | 4215716 | > SCREW M5X16 DIN912 8.8 A2A (4pieces) VP. | 1 |
| 1.24 | 2057978 | > RONDELLE A5,3 DIN6797 FST ZN (4 PIECES) | 1 |

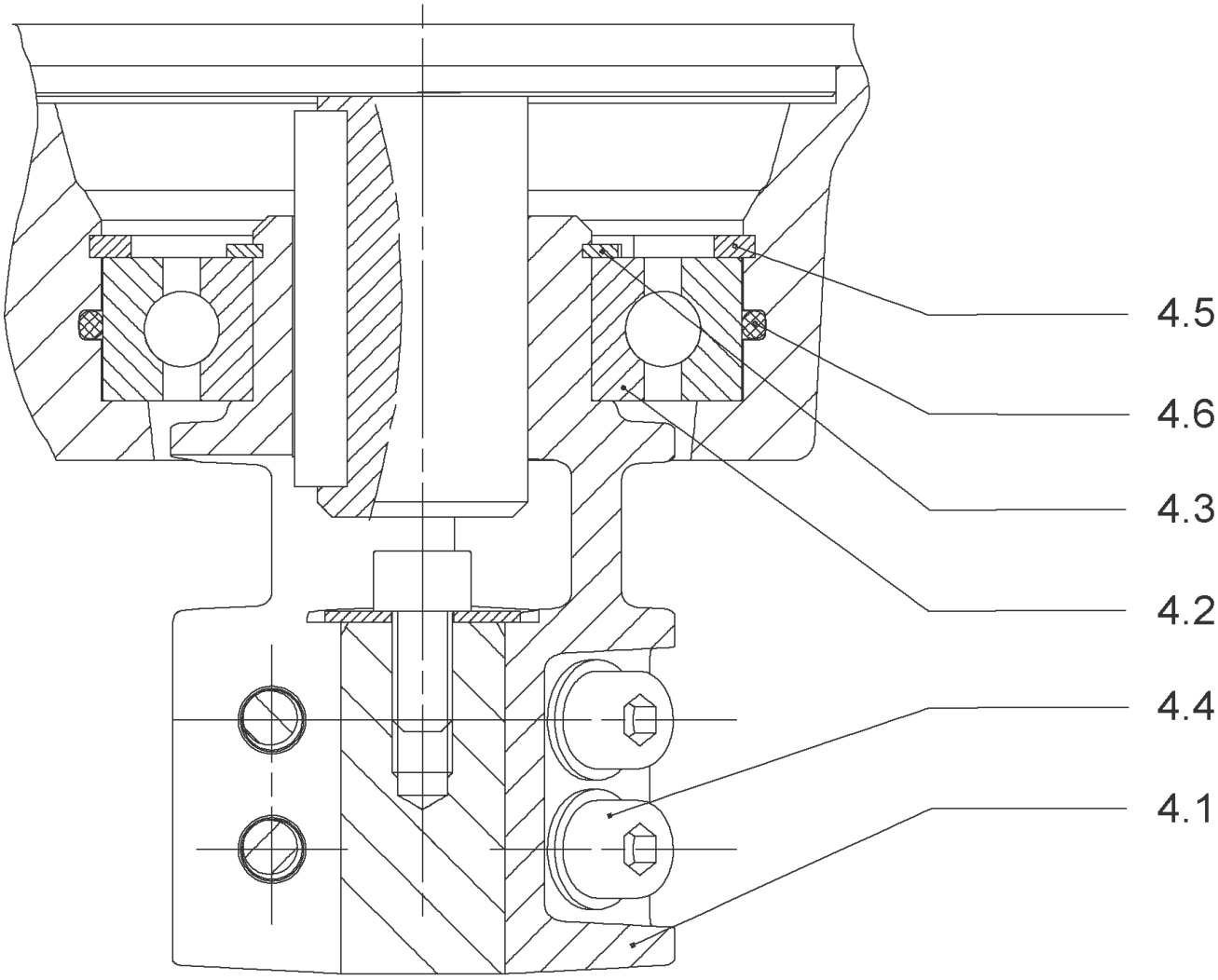
4.5
4.6
4.3
4.2
4.4
4.1

## COUPLING D.12XD.19 FT100 KIT (4178578)

| Item | Article no. | Description | Quantity |
|---|---|---|---|
| 4.1 | | COUPLING-M+ Ø12XØ19-FT100-MACHINED | 1 |
| 4.3 | 4234249 | CIRCLIP-FOR-SHAFT-D30x1.5 VP. | 1 |
| 4.2 | 2130977 | BALL BEARING 6206/ZZ-C3(HT)VP. | 1 |
| 4.4 | 4212716 | SCREW M6X20 KIT (4PIECES) | 1 |
| 4.5 | 4234250 | CIRCLIP-D62x2 VP. | 1 |
| 4.6 | 4234245 | O-RING 63X3 VP. | 1 |
| | | CONTACT-WASHER-6ETR-6,1x12,2x1,8-STEEL | 4 |

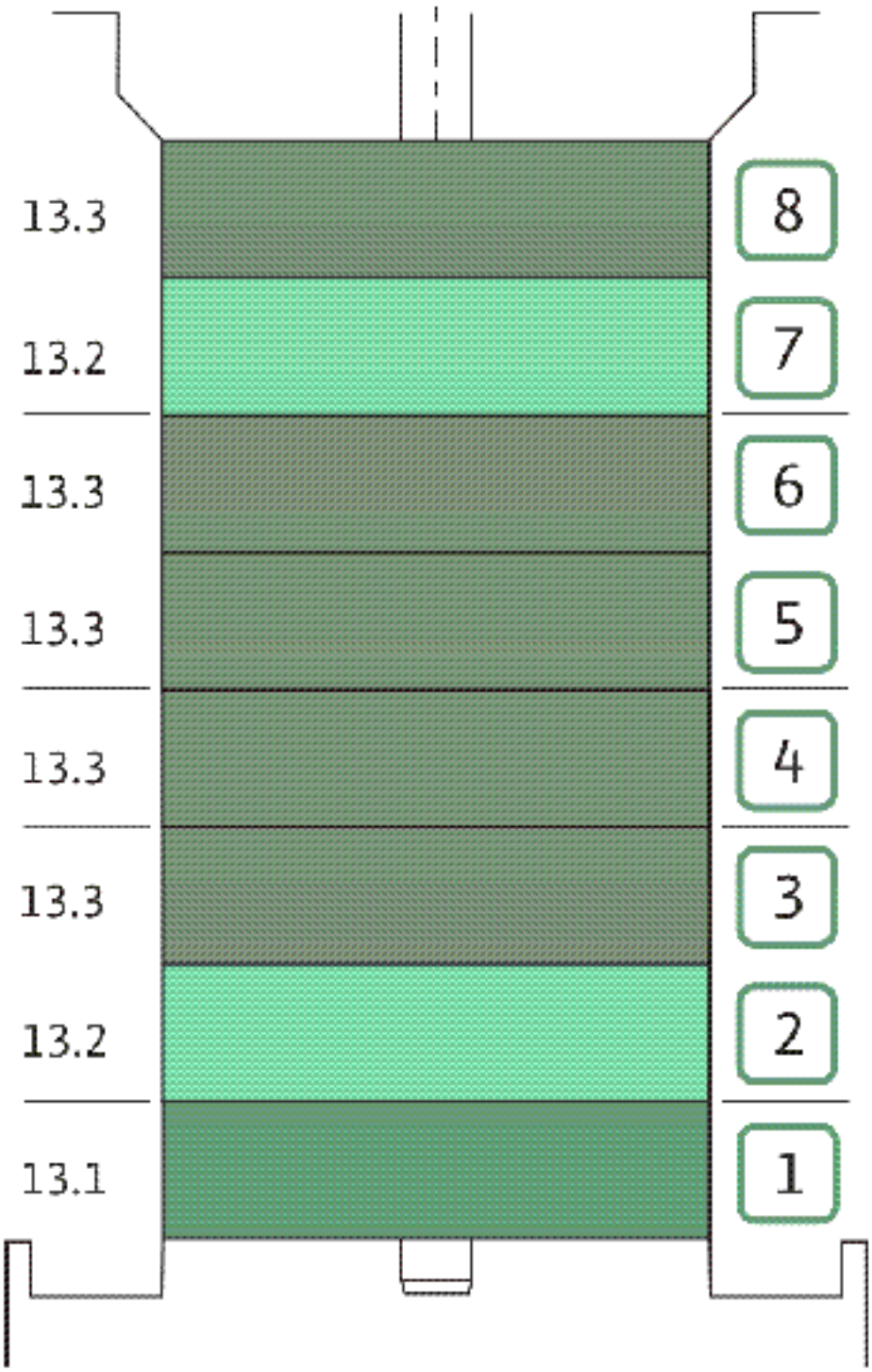
13.3
13.2
13.3
13.3
13.3
13.3
13.2
13.1
8
7
6
5
4
3
2
1

| Item | Article no. | Description | Quantity |
|---|---|---|---|
| 13.1 | 4179316 | STAGE HELIX 2 1.4301 KIT | 1 |
| | | > MACH.STG-CASING-WOGV-WNR-M+2-4-304 | 1 |
| | | > IMPELLER-M+2-304 | 1 |
| 13.2 | 4179317 | STAGE BEARING HELIX 2 1.4307 KIT | 1 |
| | | > MACH.BEARING-STG-CASING-WNR-M+2-304 | 1 |
| | | > IMPELLER-M+2-304 | 1 |
| | | > SHAFT SLEEVE SPACER Ø15,35x10,305-304 | 1 |
| | | > SHAFT-SLEEVE-D12xD16x14-CW | 1 |
| 13.3 | 4179319 | INTERMEDIATE STAGE HELIX 2 1.4301 KIT | 1 |
| | | > CORPS-ETG-STD-ACR-AJR-USIN.M+2-304 | 1 |
| | | > IMPELLER-M+2-304 | 1 |
| | | > IMPELLER SPACER Ø12,05X14,85-L24,285-304 | 1 |

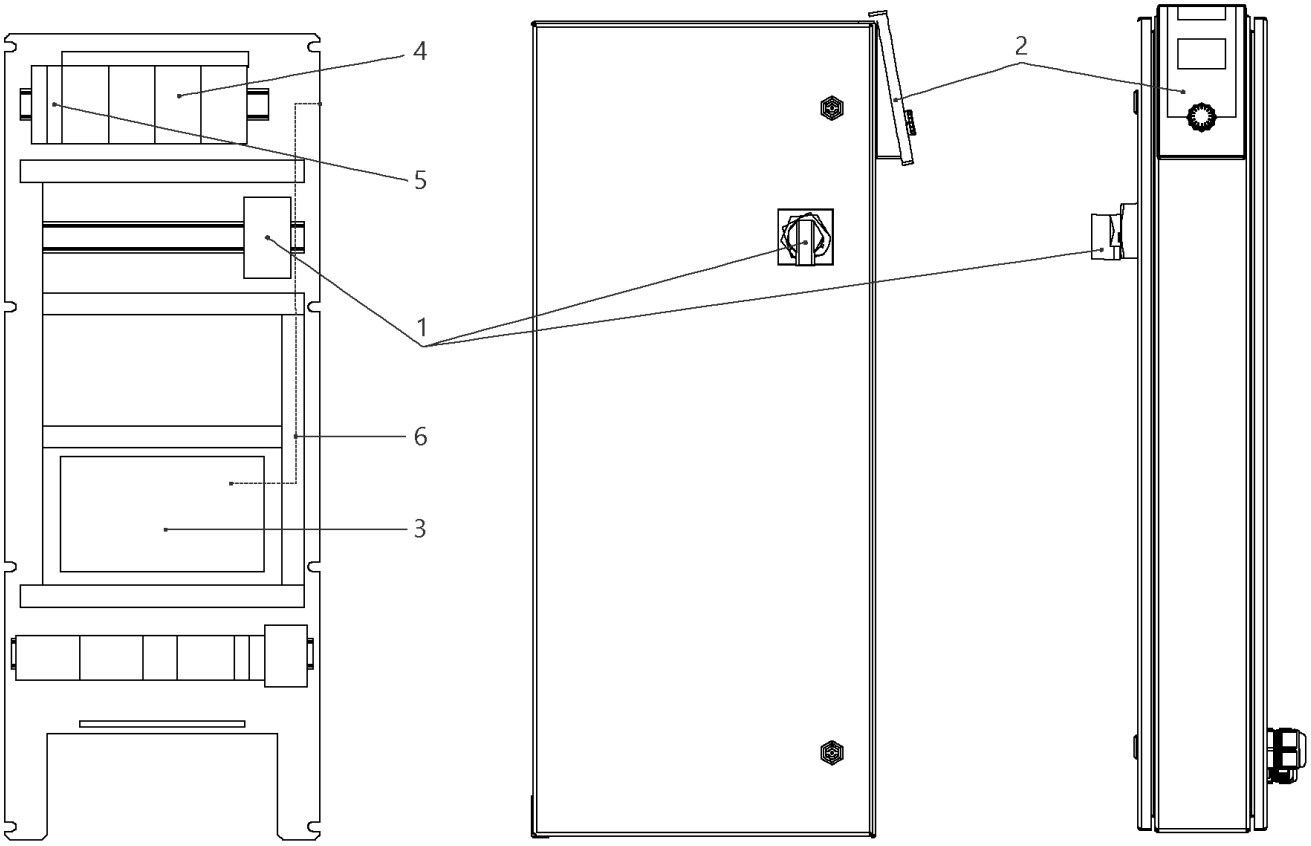
4
5
1
6
3
2

## W-CTRL-SCE-B-2x0,55-1,5KW-T4-FM-ND1

| Item | Article no. | Description | Quantity |
|---|---|---|---|
| 1 | 2104470 | MAIN SWITCH OT40F3 L250 KIT | 1 |
| 2 | 4184784 | CONTROL PANEL HMI SC KIT | 1 |
| 2 | 4185259 | ASSEMBLY DISPLAY SC PKG VP. | 1 |
| 3 | 4185257 | ASSEMBLY CPU SCe Booster VP. | 1 |
| 4 | 2051217 | AUTOM.CIRCUIT BREAKER S203 B16 TO7,5kW | 1 |
| 5 | 2046288 | CIRCUIT BREAKER S201 B16 | 1 |
| 6 | 4197081 | CABLE RJ45 CAT6 0,5M RED SC-PANEL VP. | 1 |

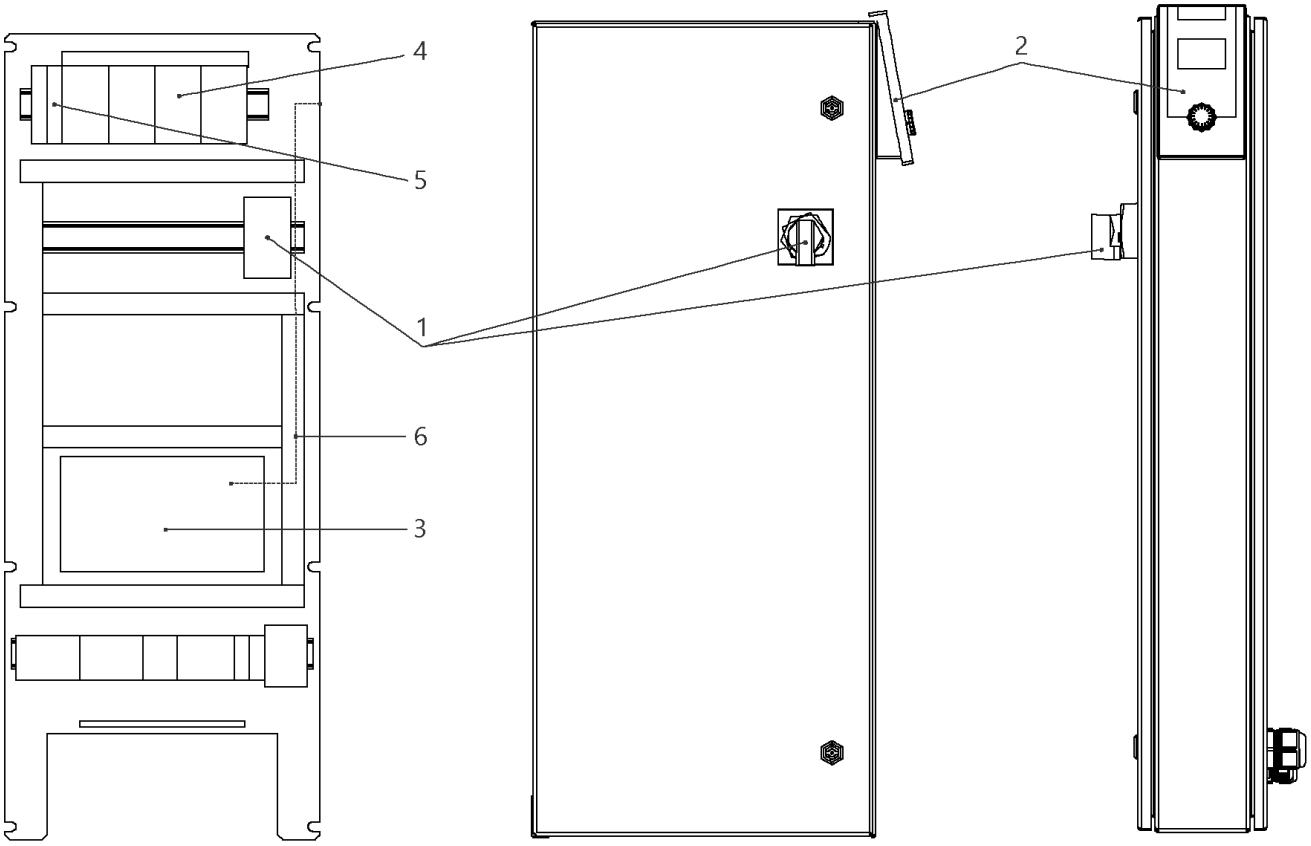
4
5
1
6
3
2

## W-CTRL-SCE-B-2x10A-T34-FM-ND1-AVC-PKG (2541913)

| Item | Article no. | Description | Quantity |
|---|---|---|---|
| 1 | 2104470 | MAIN SWITCH OT40F3 L250 KIT | 1 |
| 2 | 4184784 | CONTROL PANEL HMI SC KIT | 1 |
| 2 | 4185259 | ASSEMBLY DISPLAY SC PKG VP. | 1 |
| Note: DISPLAY ALONE / PLATINE SEULE | | | |
| 3 | 4185257 | ASSEMBLY CPU SCe Booster VP. | 1 |
| 4 | 2119861 | AUTOMATIC CIRCUIT BREAKER S203 B13 3POL. | 1 |
| 5 | 2046288 | CIRCUIT BREAKER S201 B16 | 1 |
| 6 | 4197081 | CABLE RJ45 CAT6 0,5M RED SC-PANEL VP. | 1 |

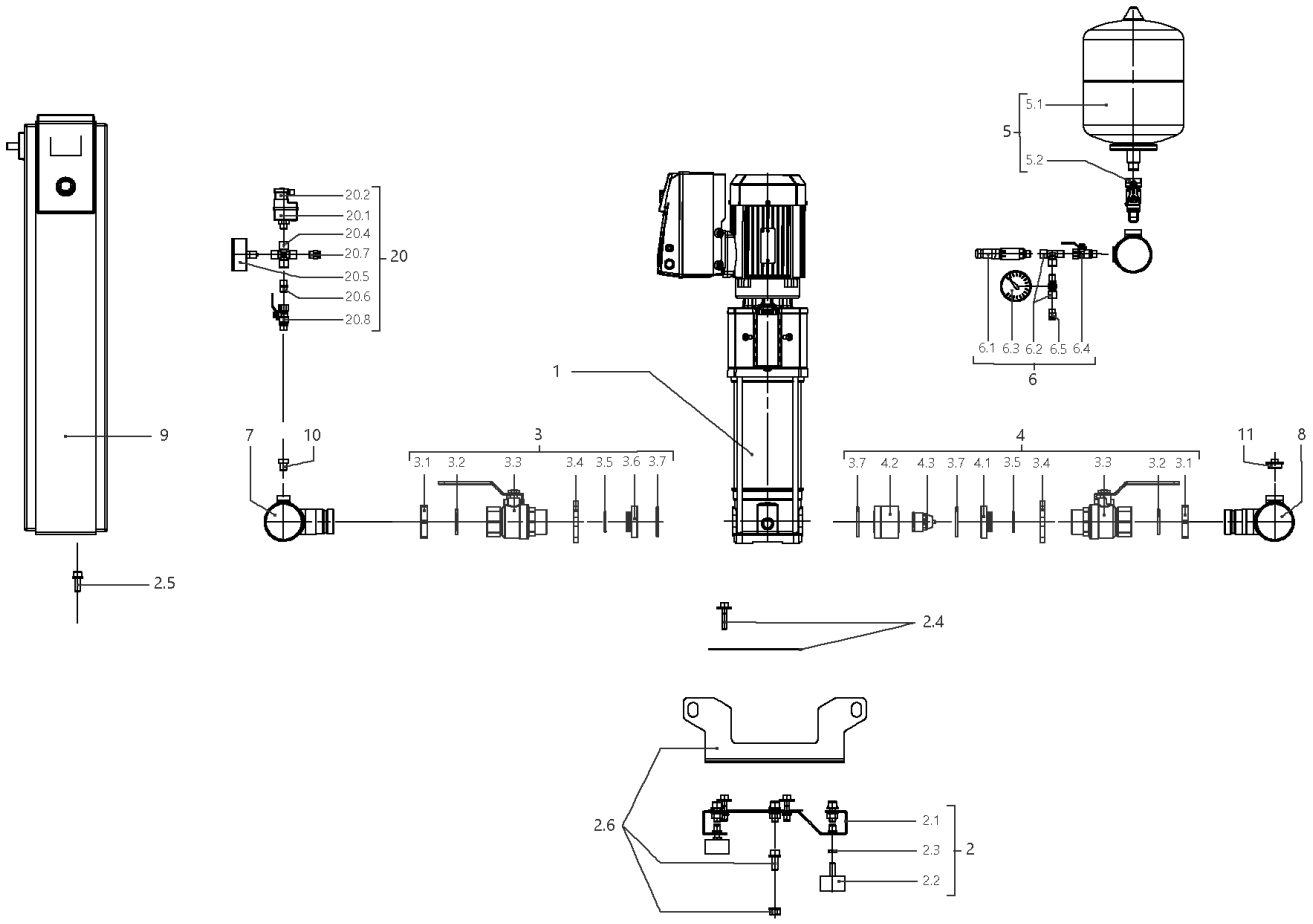
5.1
5
5.2
20.2
20.1
20.4
20.7
20
20.5
20.6
20.8
6.1 6.3 6.2 6.5 6.4
6
1
9
7
10
3
3.1 3.2 3.3 3.4 3.5 3.6 3.7
4
3.7 4.2 4.3 3.7 4.1 3.5 3.4 3.3 3.2 3.1
11
8
2.5
2.4
2.6
2.1
2.3
2
2.2

## SiBoost Smart 2HELIX VE211 (2541587)

| Item | Article no. | Description | Quantity |
|---|---|---|---|
| 1 | | HELIX VE211-1/16/E/S | 1 |
| Note: TO / BIS / JUSQU'AU 29/02/2016 | | | |
| 1 | 4201566 | HELIX VE211-1/16/E/S | 1 |
| Note: FROM / AB / À PARTIR DU 01/03/2016 | | | |
| 2 | 4199874 | BASE PLATE DE2 850x300 M10 KIT | 1 |
| 2.1 | | > BASEPLATE_2x4/6/10V_E300_850x300_BOX_150 | 1 |
| 2.2 | 2028654 | > VIBRATION DAMPER D.50X30 M10X28 | 1 |
| 2.3 | 2028281 | > NUT M10 DIN936 (ISO4035) 17H VZ | 1 |
| 2.4 | 4199875 | > HOLDER PUMP Siboost Helix V2/4 KIT | 1 |
| 2.5 | 4197084 | > HOLDER SWITCHBOX WILO Smart Control KIT | 1 |
| 2.6 | 4197085 | > LIFTING Siboost HELIX SC KIT | 1 |
| 3 | 4199876 | SUCTION SIDE Siboost Helix V2/4/6 KIT | 1 |
| 3.1 | 2032610 | > NUT G11/4 MS VP. | 1 |
| 3.2 | 2032611 | > O-RING ID.36,09X3,53N DIN3771 E7502 | 1 |
| 3.3 | 2507646 | > BALL VALVE G11/4"M-F-W.HANDLE 1/4-TURN | 1 |
| 3.4 | 2032613 | > SCREWED FLANGE G1 1/4" LK-75 ST37VZ | 1 |
| 3.5 | 2032614 | > O-RING ID.29,82X2,62N DIN3771 E7502 | 1 |
| 3.6 | 2032615 | > SPACER F.I/A KUH.DN32 CUZN | 1 |
| 3.7 | 2032616 | > O-RING ID.44X3,53N DIN3771 E7502 | 1 |
| 4 | 4199877 | DELIVERY SIDE Siboost Helix V2/4/6 KIT | 1 |
| 3.1 | 2032610 | > NUT G11/4 MS VP. | 1 |
| 3.2 | 2032611 | > O-RING ID.36,09X3,53N DIN3771 E7502 | 1 |
| 3.3 | 2507646 | > BALL VALVE G11/4"M-F-W.HANDLE 1/4-TURN | 1 |
| 3.4 | 2032613 | > SCREWED FLANGE G1 1/4" LK-75 ST37VZ | 1 |
| 3.5 | 2032614 | > O-RING ID.29,82X2,62N DIN3771 E7502 | 1 |
| 4.1 | 2058116 | > SPACER F.I/A KUH.DN32 CUZN | 1 |
| 3.7 | 2032616 | > O-RING ID.44X3,53N DIN3771 E7502 | 1 |
| 4.2 | 2058115 | > HOUSING RFV(RV-IN) DN32 SGS/DRS | 1 |
| 4.3 | 2027870 | > NON-RETURN-DEVICE INSERT DN32(MTR) | 1 |
| 5 | 2032642 | DIAPHREM TANK 8L/PN16 DIN4807/T5 KIT | 1 |
| 5.1 | 2045914 | > DIAPHREM TANK 8L TYP-DD 16BAR | 1 |
| 5.2 | 2027853 | > FLOW FITTING G3/4 FOR DIAPHRAGM VES. | 1 |
| 6 | 4197076 | PRESSURE SENSOR/ GAUGE 0-16BAR KIT | 1 |
| 6.1 | 2085909 | > PRESS.SENSOR 1/4" 0-16BAR 4-20MA VP. | 1 |

| Item | Article no. | Description | Quantity |
|---|---|---|---|
| 6.2 | 4197077 | > T-PIECE 1/4" VP. | 1 |
| 6.3 | 2028692 | > PRESSURE GAUGE NG63-PN16-G1/4 | 1 |
| 6.4 | 2028291 | > BALL TAP R1/4" PN42 GIACOMINI R254DL | 1 |
| 6.5 | 2028691 | > BLOWGUN 1/4" MS 30BAR VP. | 1 |
| 7 | 4199878 | PIPE DE2 11/2''-2x11/4"+1x1/4x600 VP. | 1 |
| 8 | 4199879 | PIPE DE2 11/2''-2x11/4"+1x1/4+1x3/4x600 | 1 |
| 9 | | W-CTRL-SCE-B-2x0,55-1,5KW-T4-FM-ND1 | 1 |
| Note: TO / BIS / JUSQU'AU 18/05/2014 | | | |
| 9 | 2541913 | W-CTRL-SCE-B-2x10A-T34-FM-ND1-AVC-PKG | 1 |
| Note: FROM / AB / À PARTIR DU 19/05/2014 | | | |
| 10 | 4197079 | PLUG G1/4"x10 AISI304 KIT | 1 |
| 11 | 2032654 | PLUG R3/4" MS VIEGA 1751 | 1 |
| 20 | | ASSEMBLY WMS. DE-EB. +VP | 1 |
| 20.1 | 2028652 | > PRESSURE SWITCH PS3-ASR 1/(1,3) VP. | 1 |
| 20.2 | 2130983 | > PLUG PS3-415 WITH KABEL 1,5M 2NO VP. | 1 |
| 20.4 | 2028290 | > CROSSPIECE R1/4" MS-NICKEL | 1 |
| 20.5 | 2028687 | > PRESSURE GAUGE NG63 R1/4" HI.0-6BAR | 1 |
| 20.6 | 2054268 | > DUAL NIPPLE G1/4" x G1/4" MS VP. | 1 |
| 20.7 | 2028691 | > BLOWGUN 1/4" MS 30BAR VP. | 1 |
| 20.8 | 2028291 | > BALL TAP R1/4" PN42 GIACOMINI R254DL | 1 |

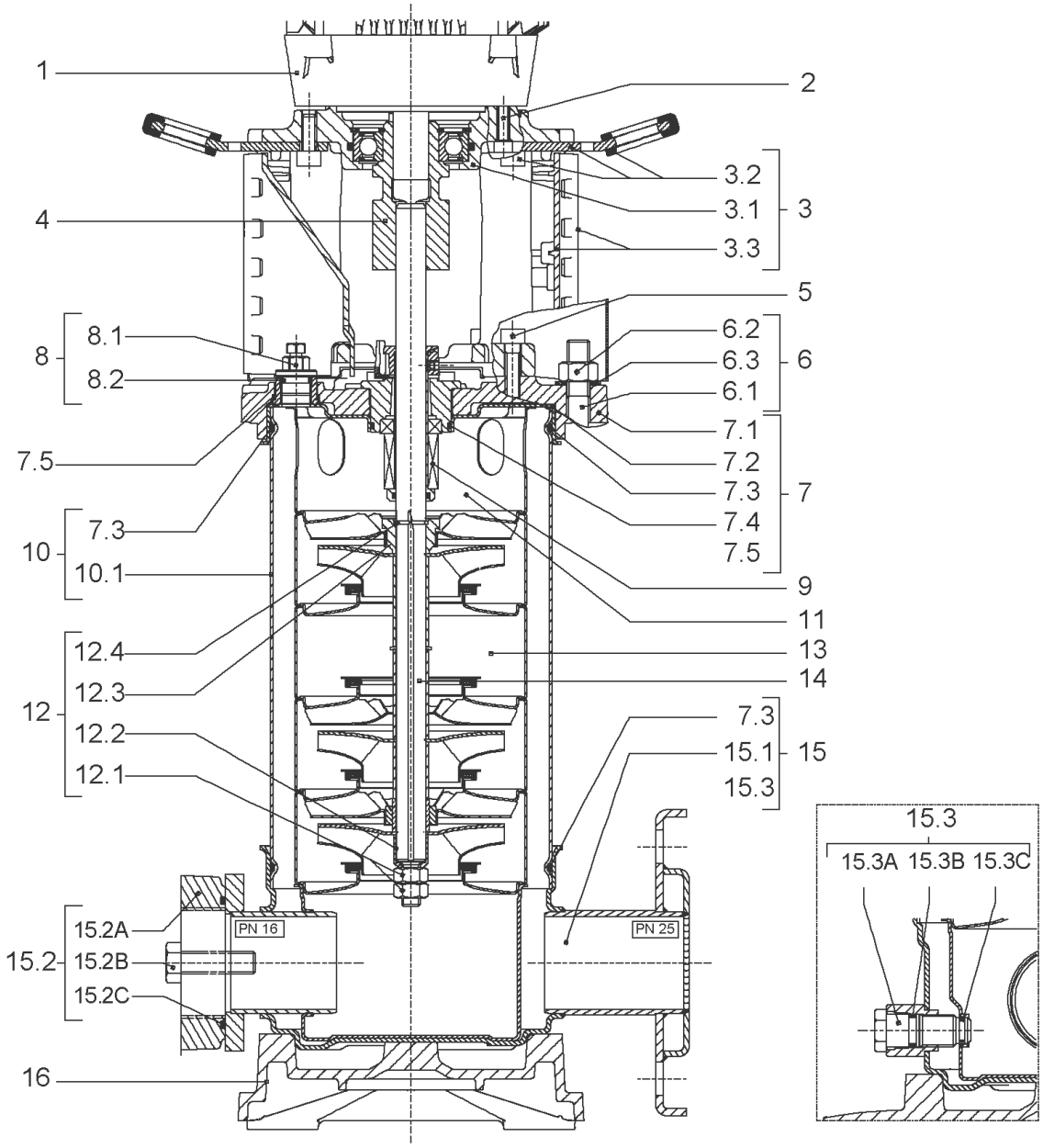
1
2
3.2
3.1
3
3.3
4
5
8.1
8
8.2
6.2
6.3
6
6.1
7.1
7.5
7.2
7.3
7
7.4
7.3
10
7.5
10.1
9
11
12.4
13
12.3
14
12
12.2
7.3
15.1
15
12.1
15.3
15.3
15.3A 15.3B 15.3C
15.2A
PN 16
PN 25
15.2
15.2B
15.2C
16

| Item | Article no. | Description | Quantity |
|---|---|---|---|
| 1 | | DRIVE HELIX-VE211-IE2-WE KIT | 1 |
| Note: MOTOR BRAND WILO ELEC | | | |
| 1 | | DRIVE HELIX-VE211-IE4-WE KIT | 1 |
| Note: MOTOR BRAND WILO ELEC | | | |
| 2 | 4159703 | SCREW M8X40 (4 PIECES) | 1 |
| 3 | 4172795 | LANTERNE FT115 HELIX KIT | 1 |
| 3.1 | | > M+5_6_LANTERN_ONE-PIECE_FT115_CATA | 1 |
| 3.2 | 2127604 | > EYELET CPL.FT HELIX(2 PIECES) | 1 |
| 3.3 | 4159692 | > COUPLING PROTECTOR FT HELIX KIT | 1 |
| 4 | 4178600 | COUPLING D.12XD.24 FT115 KIT | 1 |
| 5 | 4159707 | SCREW M8X30 (4 PIECES) | 1 |
| 6 | 4178605 | STUD BOLT M12X469 KIT | 1 |
| 6.1 | | > TIE BOLT M12-469x18x30-1.4057 | 1 |
| 6.2 | 2094647 | > NUT M12 M12 ISO4032 VP. | 1 |
| 6.3 | 2123557 | > WASHER CS-12.4-24-1.6-NFE25 (4 PIECES) | 1 |
| 7 | 4210143 | STATIONARY RING HOLDER HELIX 6" EPDM | 1 |
| 7.2 | 2127607 | > STATIONARY RING HOLDER 6" HELIX 1.4301 V | 1 |
| 7.3 | 4176513 | > O-RING FOR PUMP JACKET VP. | 1 |
| 7.4 | 2127603 | > O-RING ID.37,6x2,4 EPDM VP. | 1 |
| 7.5 | 2127602 | > O-RING ID.21,35x2 EPDM VP. | 1 |
| 8 | 4159686 | FILING/PURGING PLUG HELIX EPDM KIT | 1 |
| 9 | 4178564 | SEAL-KIT-HELIX2-4 O/E KIT | 1 |
| 10 | 4178606 | HOUSING-PIPE D.152X335 1.4304 KIT | 1 |
| 7.3 | 4176513 | > O-RING FOR PUMP JACKET VP. | 1 |
| 10.1 | | > HOUSING-PIPE Ø152-M+211/411-304 | 1 |
| 11 | 4179315 | CENTERING STAGE HELIX V2 1.4307 VP. | 1 |
| 12 | 4178568 | SHAFT EQUIPMENT HELIX V2/V4 KIT | 1 |
| 12.1 | | > NUT-H-M8-STAINLESS-STEEL A4-70 | 2 |
| 12.2 | | > SHAFT END WASHER Ø8/Ø12 316L | 1 |
| 12.3 | | > STOP COLLAR OF IMPELLER M+2/4 SINGLEBLOC | 1 |
| 12.4 | | > STOP-RUSH-1/2-D12xd2-M+316 | 2 |
| 13 | | HYDRAULIC HELIX V 211 1.4307 | 1 |
| 14 | 4178608 | SHAFT D.12X458 1.4301 VP. | 1 |
| 15 | 4174079 | PUMP HOUSING HELIX DN32 PN16 1.4301 KIT | 1 |

| Item | Article no. | Description | Quantity |
|---|---|---|---|
| 7.3 | 4176513 | > O-RING FOR PUMP JACKET VP. | 1 |
| 15.1 | | > BLASTING PPE HOUSING V-PN16-DN32-5"-304 | 1 |
| 15.2 | 4217889 | > COUNTER FLANGE-G1"-PN16-GJL KIT | 1 |
| 15.3 | 4171321 | > PRIMING/DRAIN PLUG EPDM HELIX KIT | 1 |
| 16 | 4177964 | BASEPLATE HELIX V2/4/6 PN16 VP. | 1 |

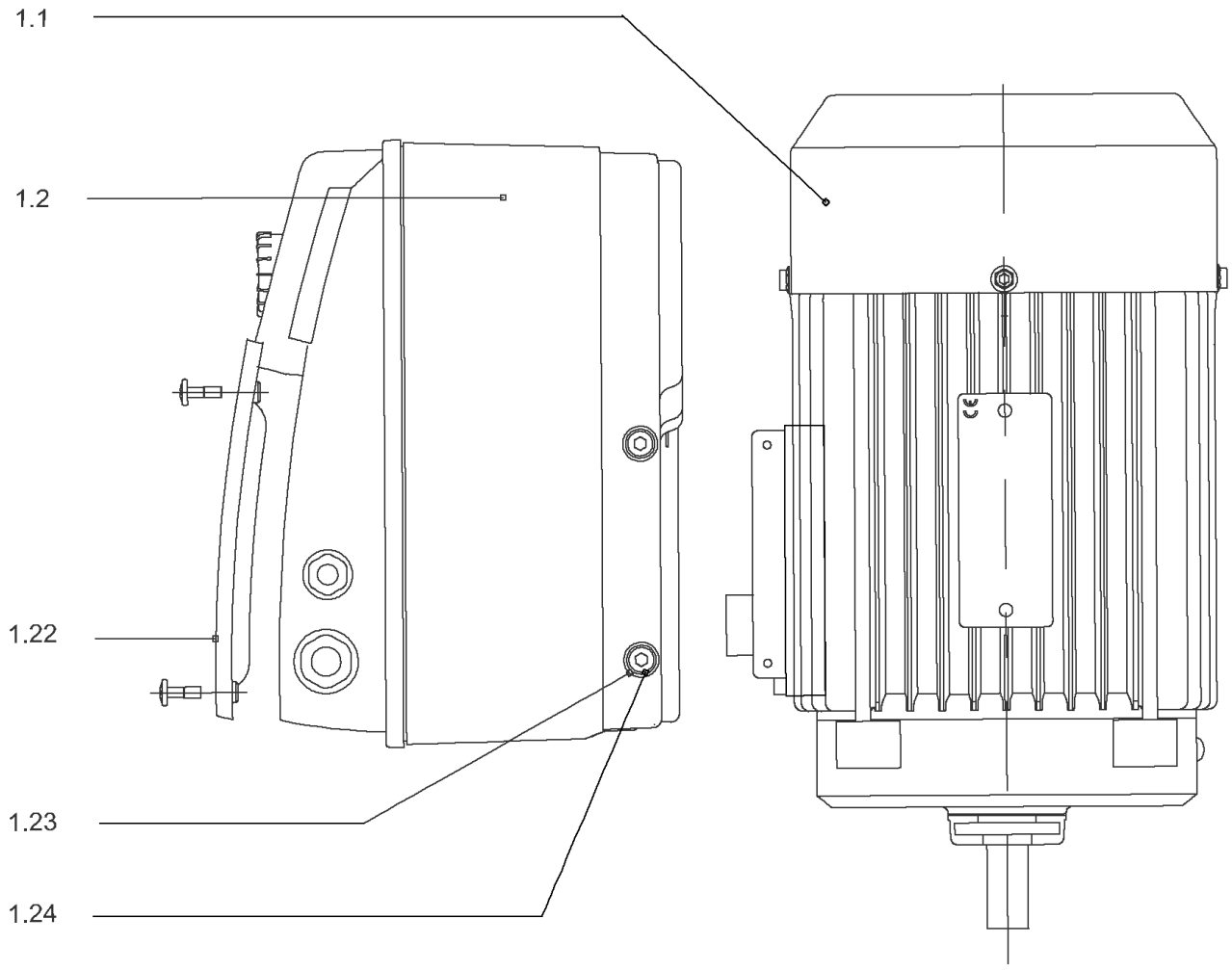
1.1
1.2
1.22
1.23
1.24

## DRIVE HELIX-VE211-IE2-WE KIT

| Item | Article no. | Description | Quantity |
|---|---|---|---|
| 1.1 | | MOTOR 1,5/2/90 3~ 380V 60HZ IE2 WE VP. | 1 |
| Note: no longer available/nicht mehrlieferbar/n'est plus disponible | | | |
| | | SPARE PARTS MOTOR:ON REQUEST | 1 |
| 1.2 | 4184865 | MODULE HELIX-VE211-IE2-WE KIT | 1 |
| 1.22 | 2054227 | > MODULE COVER/GASKET TL3/4 KIT | 1 |
| 1.23 | 4215716 | > SCREW M5X16 DIN912 8.8 A2A (4pieces) VP. | 1 |
| 1.24 | 2057978 | > RONDELLE A5,3 DIN6797 FST ZN (4 PIECES) | 1 |

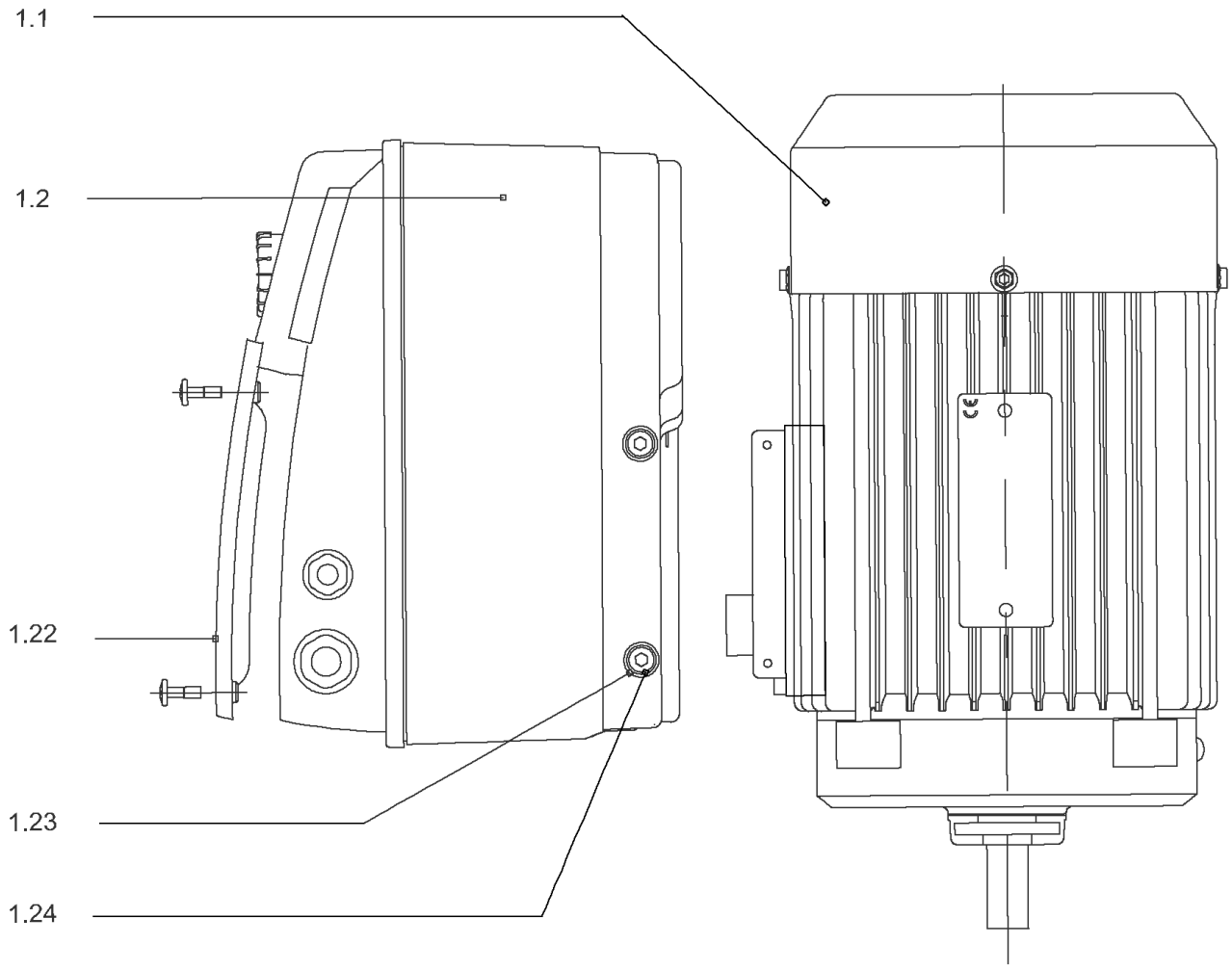
1.1
1.2
1.22
1.23
1.24

## DRIVE HELIX-VE211-IE4-WE KIT

| Item | Article no. | Description | Quantity |
|---|---|---|---|
| 1.1 | 4207918 | MOTOR 1.5/2/90 3~ 380V 60HZ IE4 WE VP. | 1 |
| | | SPARE PARTS MOTOR:ON REQUEST | 1 |
| 1.2 | 4213729 | MODULE HELIX-VE211-IE4-WE KIT | 1 |
| 1.22 | 2054227 | > MODULE COVER/GASKET TL3/4 KIT | 1 |
| 1.23 | 4215716 | > SCREW M5X16 DIN912 8.8 A2A (4pieces) VP. | 1 |
| 1.24 | 2057978 | > RONDELLE A5,3 DIN6797 FST ZN (4 PIECES) | 1 |

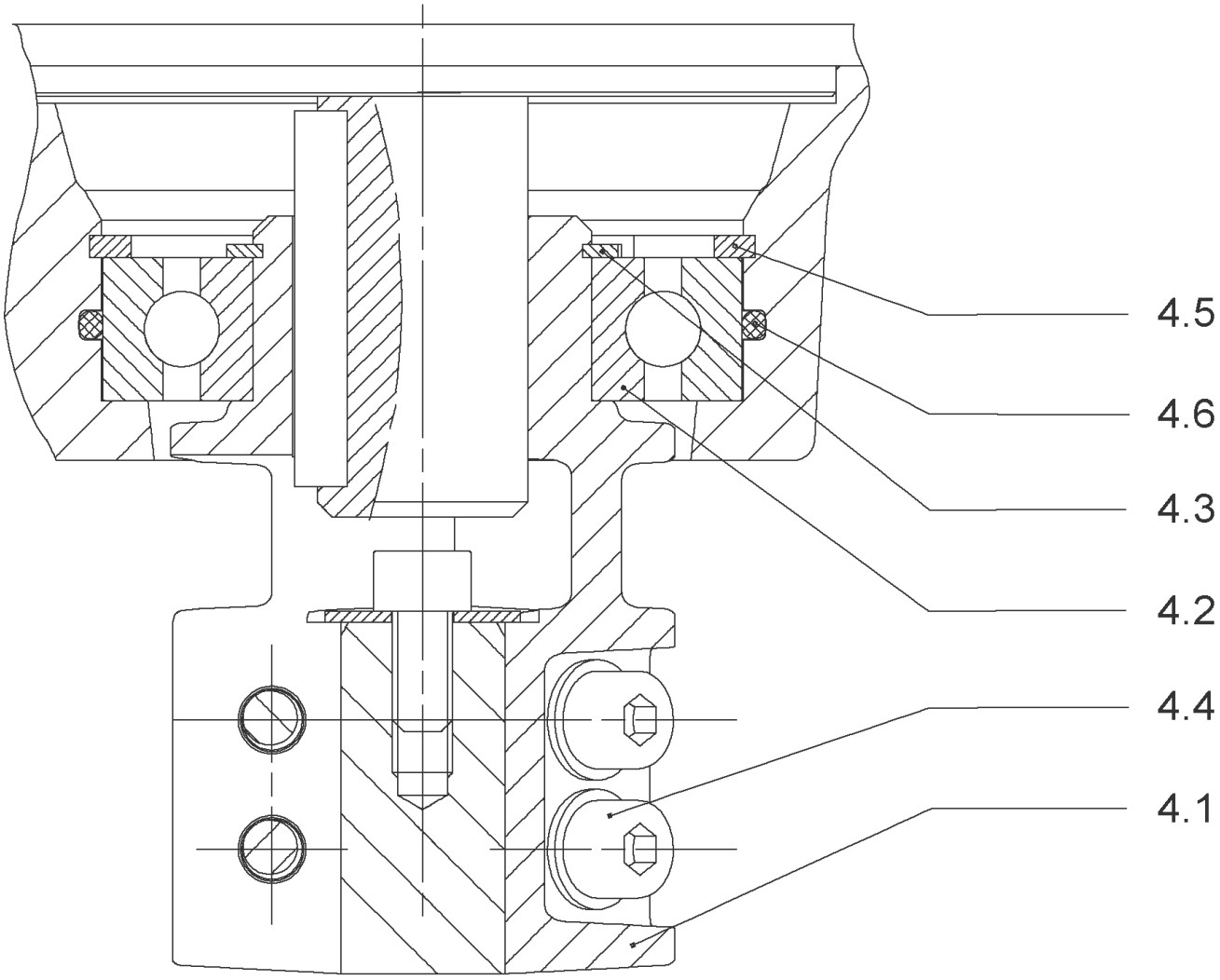
4.5
4.6
4.3
4.2
4.4
4.1

## COUPLING D.12XD.24 FT115 KIT (4178600)

| Item | Article no. | Description | Quantity |
|---|---|---|---|
| 4.1 | | COUPLING-M+ Ø12XØ24-FT115-MACHINED | 1 |
| 4.2 | 2131023 | BALL BEARING 6207/ZZ-C3(HT)VP. | 1 |
| 4.3 | 4234254 | CIRCLIP-FOR-SHAFT-D35x1.5 VP. | 1 |
| 4.4 | 4157726 | SCREW KIT M8X30 (4 PIECES) | 1 |
| 4.5 | 4234251 | CIRCLIP-D72x2.5 VP. | 1 |
| 4.6 | 4234246 | O-RING 72X3 VP. | 1 |
| | | NOMEL CONTACT WASHER 8x16x1,4 STEEL ZC | 1 |

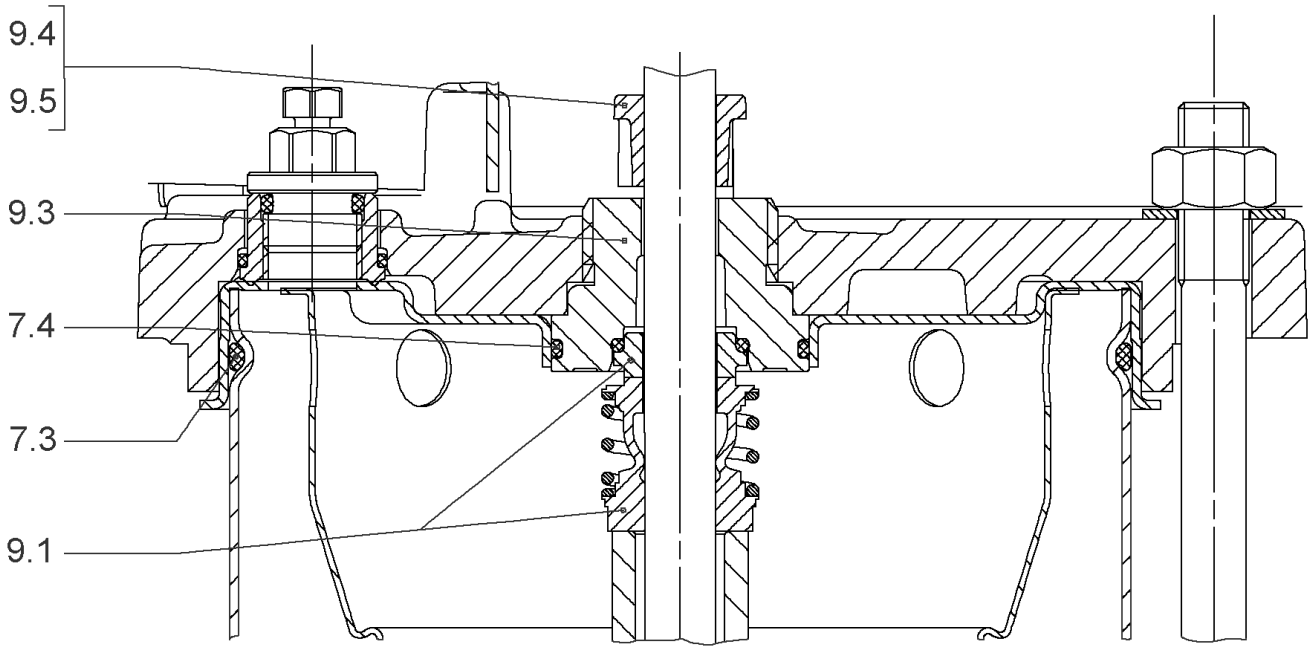
9.4
9.5
9.3
7.4
7.3
9.1

## SEAL-KIT-HELIX2-4 O/E KIT (4178564)

| Item | Article no. | Description | Quantity |
|---|---|---|---|
| 7.3 | 4176513 | O-RING FOR PUMP JACKET VP. | 1 |
| 7.4 | 2127603 | O-RING ID.37,6x2,4 EPDM VP. | 1 |
| 9.1 | 4178563 | M.SEAL.HELIX2-4 O/E VP. | 1 |
| 9.3 | 4178561 | RING HOLDER Ø22 1.4301 VP. | 1 |
| 9.5 | 4178562 | DRIVE RING D.22/12.2X10 MACH.VP. | 1 |
| 9.4 | 4176520 | SCREW CH M5x5 A4-70 ( 3PIECES ) | 1 |

13.3
13.3
13.2
13.3
13.3
13.3
13.3
13.3
13.3
13.2
13.1
11
10
9
8
7
6
5
4
3
2
1

| Item | Article no. | Description | Quantity |
|---|---|---|---|
| 13.1 | 4179316 | STAGE HELIX 2 1.4301 KIT | 1 |
| | | > MACH.STG-CASING-WOGV-WNR-M+2-4-304 | 1 |
| | | > IMPELLER-M+2-304 | 1 |
| 13.2 | 4179317 | STAGE BEARING HELIX 2 1.4307 KIT | 1 |
| | | > MACH.BEARING-STG-CASING-WNR-M+2-304 | 1 |
| | | > IMPELLER-M+2-304 | 1 |
| | | > SHAFT SLEEVE SPACER Ø15,35x10,305-304 | 1 |
| | | > SHAFT-SLEEVE-D12xD16x14-CW | 1 |
| 13.3 | 4179319 | INTERMEDIATE STAGE HELIX 2 1.4301 KIT | 1 |
| | | > CORPS-ETG-STD-ACR-AJR-USIN.M+2-304 | 1 |
| | | > IMPELLER-M+2-304 | 1 |
| | | > IMPELLER SPACER Ø12,05X14,85-L24,285-304 | 1 |

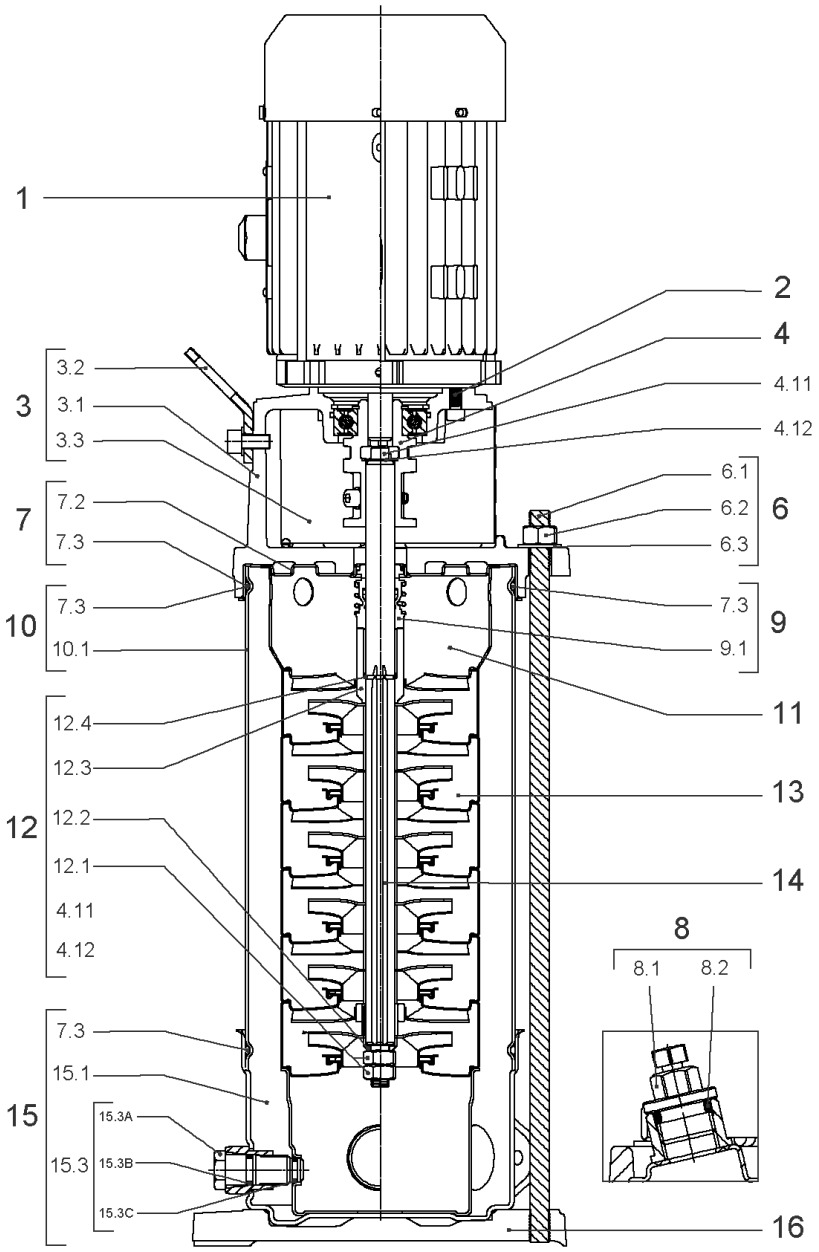
1
2
4
4.11
4.12
3
3.2
3.1
3.3
7
7.2
7.3
6
6.1
6.2
6.3
10
7.3
10.1
9
7.3
9.1
11
12
12.4
12.3
12.2
12.1
4.11
4.12
13
14
8
8.1
8.2
15
7.3
15.1
15.3
15.3A
15.3B
15.3C
16

## HELIX VE211-1/16/E/S (4201566)

| Item | Article no. | Description | Quantity |
|---|---|---|---|
| 1 | | DRIVE HELIX-VE211-IE4-WE KIT | 1 |
| Note: MOTOR BRAND WILO ELEC | | | |
| | | SPARE PARTS MOTOR:ON REQUEST | 1 |
| 2 | 4159707 | SCREW M8X30 (4 PIECES) | 1 |
| 3 | 4213784 | LANTERN FT115 HELIX KIT | 1 |
| 3.1 | | > LANT-MOT-VMI-ReDTC6"-FT115-MACHINED+CATA | 1 |
| 3.2 | 4184852 | > EYELET CPL.FT HELIX (2 PIECES) | 1 |
| 3.3 | 4213782 | > COUPLING PROTECTOR FT115/130 HELIX KIT | 1 |
| 4 | 4178600 | COUPLING D.12XD.24 FT115 KIT | 1 |
| 6 | 4178605 | STUD BOLT M12X469 KIT | 1 |
| 6.1 | | > TIE BOLT M12-469x18x30-1.4057 | 1 |
| 6.2 | 2094647 | > NUT M12 M12 ISO4032 VP. | 1 |
| 6.3 | 2123557 | > WASHER CS-12.4-24-1.6-NFE25 (4 PIECES) | 1 |
| 7 | 4212722 | STATIONARY RING HOLDER HELIX D23 ReDTC | 1 |
| 7.2 | 4212720 | > STATIONARY RING HOLDER HELIX D23 VP. | 1 |
| 7.3 | 4176513 | > O-RING FOR PUMP JACKET VP. | 1 |
| 8 | 4212724 | FILING/PURGING PLUG HELIX ReDTC KIT | 1 |
| 8.1 | | > FILLING PLUG MVI6"-304 | 1 |
| 8.2 | 4177800 | > O-RING EPDM PLUG HELIX VP. | 1 |
| 9 | 4212726 | MECH.SEAL HELIX V2/4 O/E ReDTC KIT | 1 |
| 9.1 | 4178563 | > M.SEAL.HELIX2-4 O/E VP. | 1 |
| 7.3 | 4176513 | > O-RING FOR PUMP JACKET VP. | 1 |
| 10 | 4178606 | HOUSING-PIPE D.152X335 1.4304 KIT | 1 |
| 7.3 | 4176513 | > O-RING FOR PUMP JACKET VP. | 1 |
| 10.1 | | > HOUSING-PIPE Ø152-M+211/411-304 | 1 |
| 11 | 4179315 | CENTERING STAGE HELIX V2 1.4307 VP. | 1 |
| 12 | 4212729 | SHAFT EQUIPMENT HELIX V2/4 ReDTC KIT | 1 |
| 12.1 | | > NUT-H-M8-STAINLESS-STEEL A4-70 | 1 |
| 12.2 | | > SHAFT END WASHER Ø8/Ø12 316L | 1 |
| 12.3 | | > 1/2-SNAP-RING-2/4M3-316L | 1 |
| 12.4 | | > STOP-RUSH-1/2-D12xd2-M+316 | 1 |
| 4.11 | | > SCREW CHC-M6X14-8.8-ISO4762-GEOMET500A | 1 |
| 4.12 | | > WASHER D.24 L6U ZINK | 1 |
| 13 | | HYDRAULIC HELIX V 211 1.4307 | 1 |

| Item | Article no. | Description | Quantity |
|---|---|---|---|
| 14 | 4213776 | SHAFT D.12X406 HELIX 1.4057 VP. | 1 |
| 15 | 4174079 | PUMP HOUSING HELIX DN32 PN16 1.4301 KIT | 1 |
| 7.3 | 4176513 | > O-RING FOR PUMP JACKET VP. | 1 |
| 15.1 | | > BLASTING PPE HOUSING V-PN16-DN32-5"-304 | 1 |
| 15.2 | 4217889 | > COUNTER FLANGE-G1"-PN16-GJL KIT | 1 |
| 15.3 | 4171321 | > PRIMING/DRAIN PLUG EPDM HELIX KIT | 1 |
| 16 | 4177964 | BASEPLATE HELIX V2/4/6 PN16 VP. | 1 |

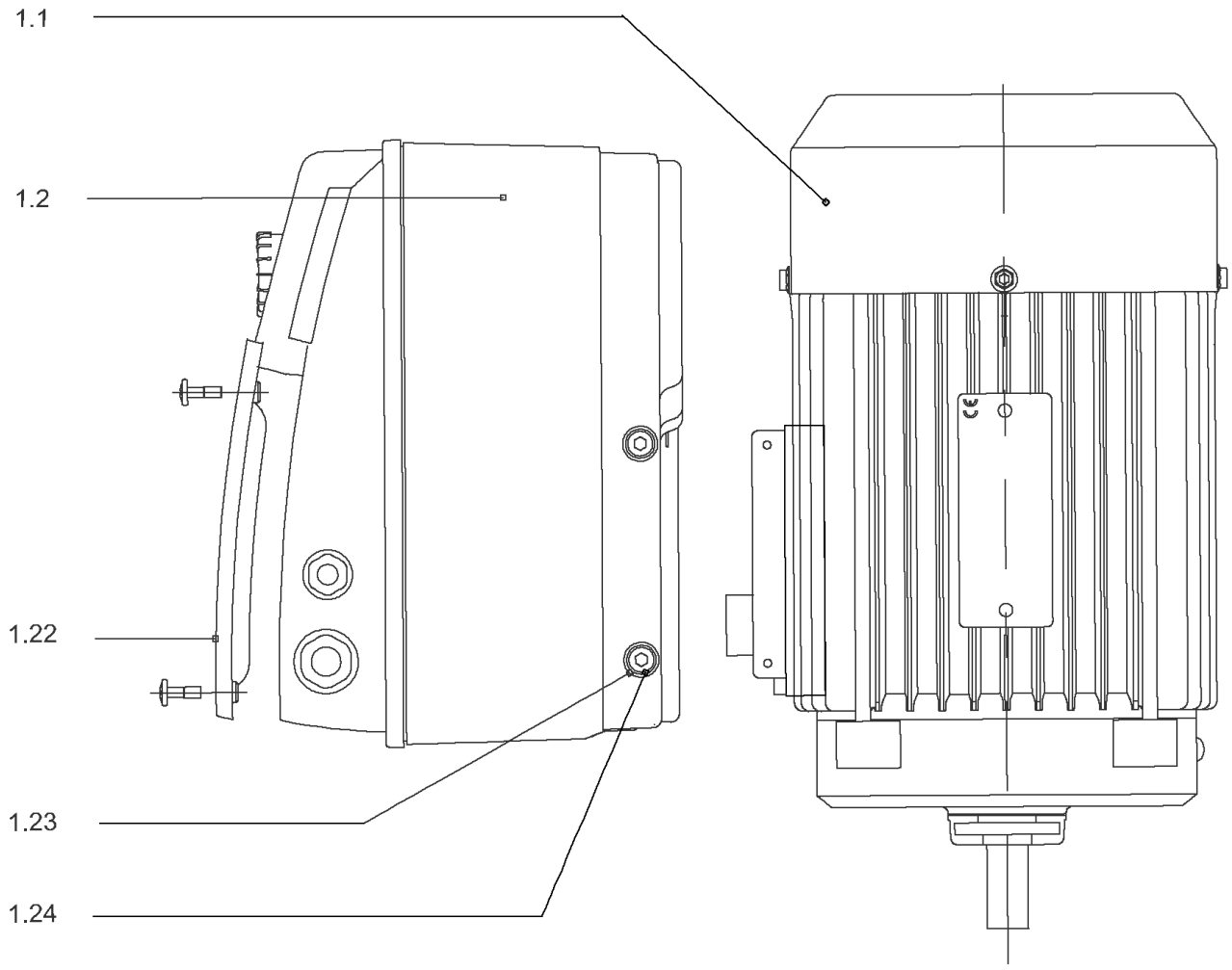
1.1
1.2
1.22
1.23
1.24

## DRIVE HELIX-VE211-IE4-WE KIT

| Item | Article no. | Description | Quantity |
|---|---|---|---|
| 1.1 | 4207918 | MOTOR 1.5/2/90 3~ 380V 60HZ IE4 WE VP. | 1 |
| | | SPARE PARTS MOTOR:ON REQUEST | 1 |
| 1.2 | 4213729 | MODULE HELIX-VE211-IE4-WE KIT | 1 |
| 1.22 | 2054227 | > MODULE COVER/GASKET TL3/4 KIT | 1 |
| 1.23 | 4215716 | > SCREW M5X16 DIN912 8.8 A2A (4pieces) VP. | 1 |
| 1.24 | 2057978 | > RONDELLE A5,3 DIN6797 FST ZN (4 PIECES) | 1 |

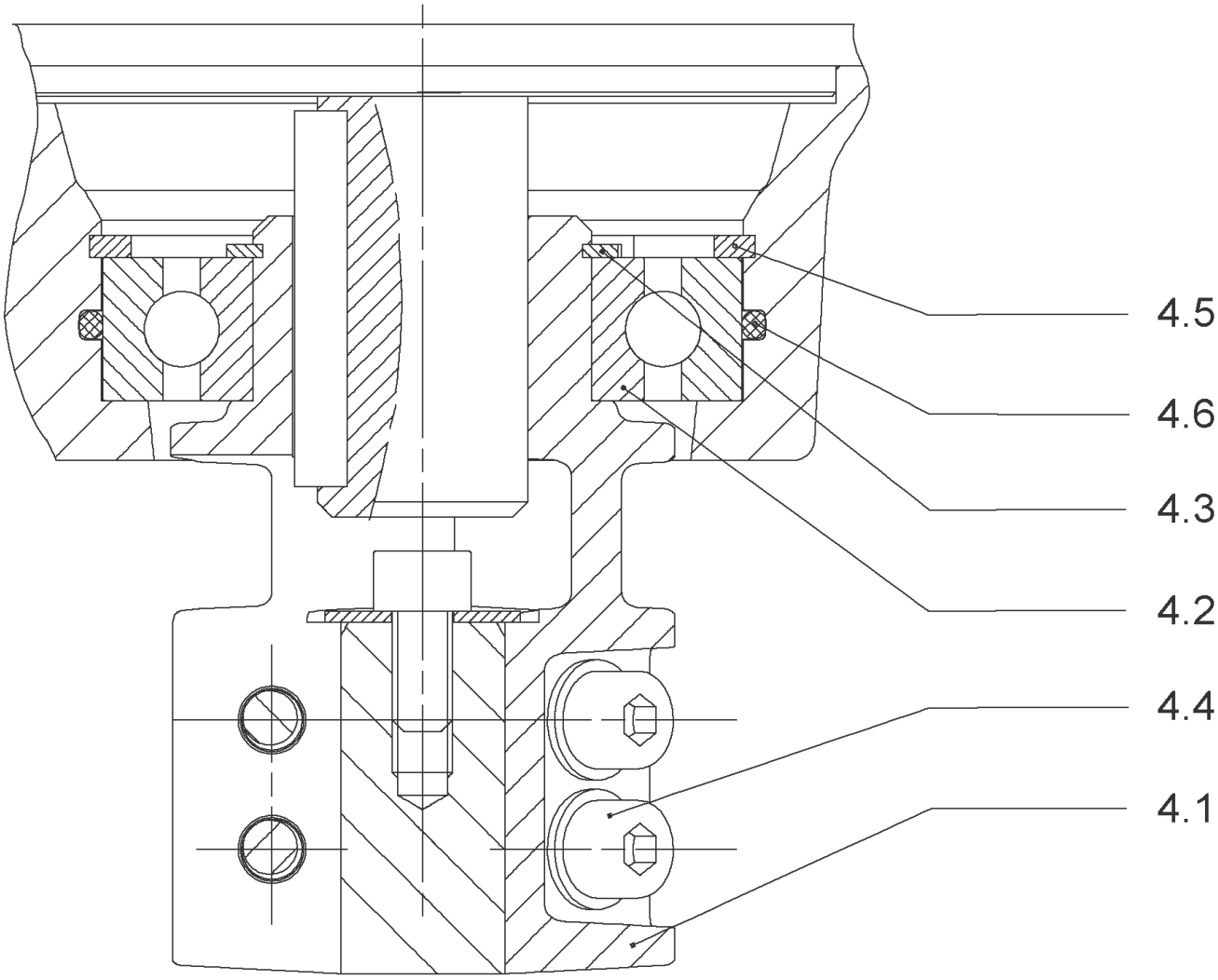
4.5
4.6
4.3
4.2
4.4
4.1

## COUPLING D.12XD.24 FT115 KIT (4178600)

| Item | Article no. | Description | Quantity |
|---|---|---|---|
| 4.1 | | COUPLING-M+ Ø12XØ24-FT115-MACHINED | 1 |
| 4.2 | 2131023 | BALL BEARING 6207/ZZ-C3(HT)VP. | 1 |
| 4.3 | 4234254 | CIRCLIP-FOR-SHAFT-D35x1.5 VP. | 1 |
| 4.4 | 4157726 | SCREW KIT M8X30 (4 PIECES) | 1 |
| 4.5 | 4234251 | CIRCLIP-D72x2.5 VP. | 1 |
| 4.6 | 4234246 | O-RING 72X3 VP. | 1 |
| | | NOMEL CONTACT WASHER 8x16x1,4 STEEL ZC | 1 |

13.3
13.3
13.2
13.3
13.3
13.3
13.3
13.3
13.3
13.2
13.1
11
10
9
8
7
6
5
4
3
2
1

| Item | Article no. | Description | Quantity |
|---|---|---|---|
| 13.1 | 4179316 | STAGE HELIX 2 1.4301 KIT | 1 |
| | | > MACH.STG-CASING-WOGV-WNR-M+2-4-304 | 1 |
| | | > IMPELLER-M+2-304 | 1 |
| 13.2 | 4179317 | STAGE BEARING HELIX 2 1.4307 KIT | 1 |
| | | > MACH.BEARING-STG-CASING-WNR-M+2-304 | 1 |
| | | > IMPELLER-M+2-304 | 1 |
| | | > SHAFT SLEEVE SPACER Ø15,35x10,305-304 | 1 |
| | | > SHAFT-SLEEVE-D12xD16x14-CW | 1 |
| 13.3 | 4179319 | INTERMEDIATE STAGE HELIX 2 1.4301 KIT | 1 |
| | | > CORPS-ETG-STD-ACR-AJR-USIN.M+2-304 | 1 |
| | | > IMPELLER-M+2-304 | 1 |
| | | > IMPELLER SPACER Ø12,05X14,85-L24,285-304 | 1 |

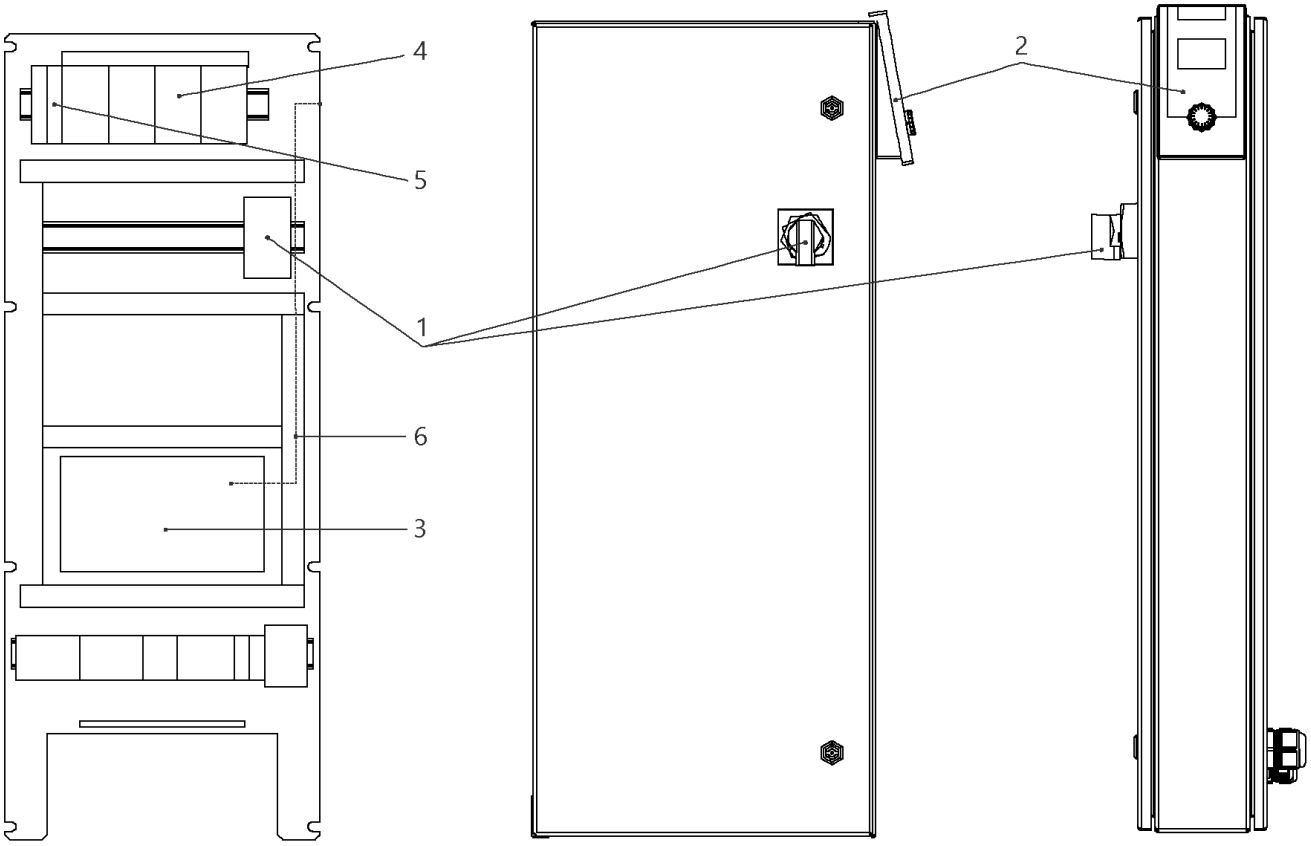
4
5
1
6
3
2

## W-CTRL-SCE-B-2x0,55-1,5KW-T4-FM-ND1

| Item | Article no. | Description | Quantity |
|---|---|---|---|
| 1 | 2104470 | MAIN SWITCH OT40F3 L250 KIT | 1 |
| 2 | 4184784 | CONTROL PANEL HMI SC KIT | 1 |
| 2 | 4185259 | ASSEMBLY DISPLAY SC PKG VP. | 1 |
| 3 | 4185257 | ASSEMBLY CPU SCe Booster VP. | 1 |
| 4 | 2051217 | AUTOM.CIRCUIT BREAKER S203 B16 TO7,5kW | 1 |
| 5 | 2046288 | CIRCUIT BREAKER S201 B16 | 1 |
| 6 | 4197081 | CABLE RJ45 CAT6 0,5M RED SC-PANEL VP. | 1 |

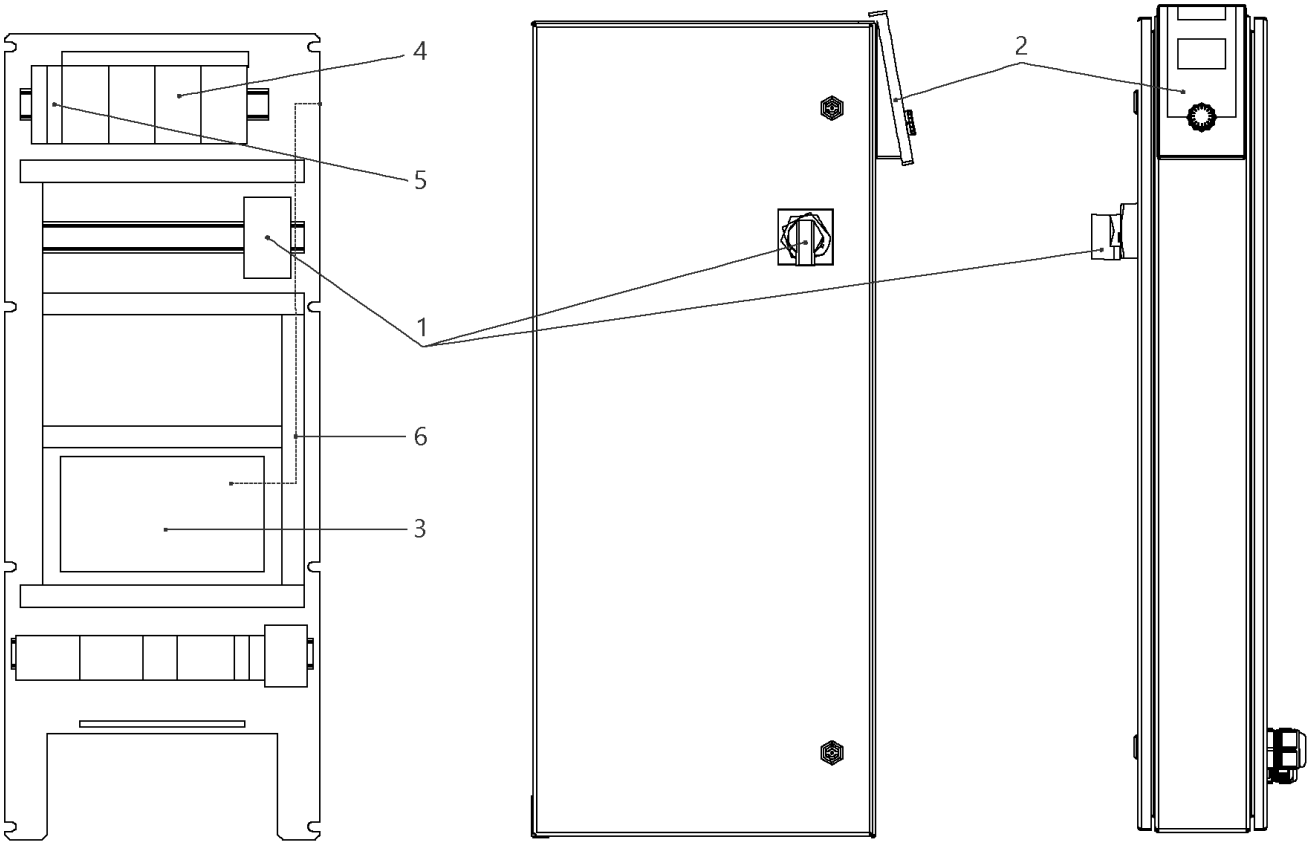
4
5
1
6
3
2

## W-CTRL-SCE-B-2x10A-T34-FM-ND1-AVC-PKG (2541913)

| Item | Article no. | Description | Quantity |
|---|---|---|---|
| 1 | 2104470 | MAIN SWITCH OT40F3 L250 KIT | 1 |
| 2 | 4184784 | CONTROL PANEL HMI SC KIT | 1 |
| 2 | 4185259 | ASSEMBLY DISPLAY SC PKG VP. | 1 |
| Note: DISPLAY ALONE / PLATINE SEULE | | | |
| 3 | 4185257 | ASSEMBLY CPU SCe Booster VP. | 1 |
| 4 | 2119861 | AUTOMATIC CIRCUIT BREAKER S203 B13 3POL. | 1 |
| 5 | 2046288 | CIRCUIT BREAKER S201 B16 | 1 |
| 6 | 4197081 | CABLE RJ45 CAT6 0,5M RED SC-PANEL VP. | 1 |

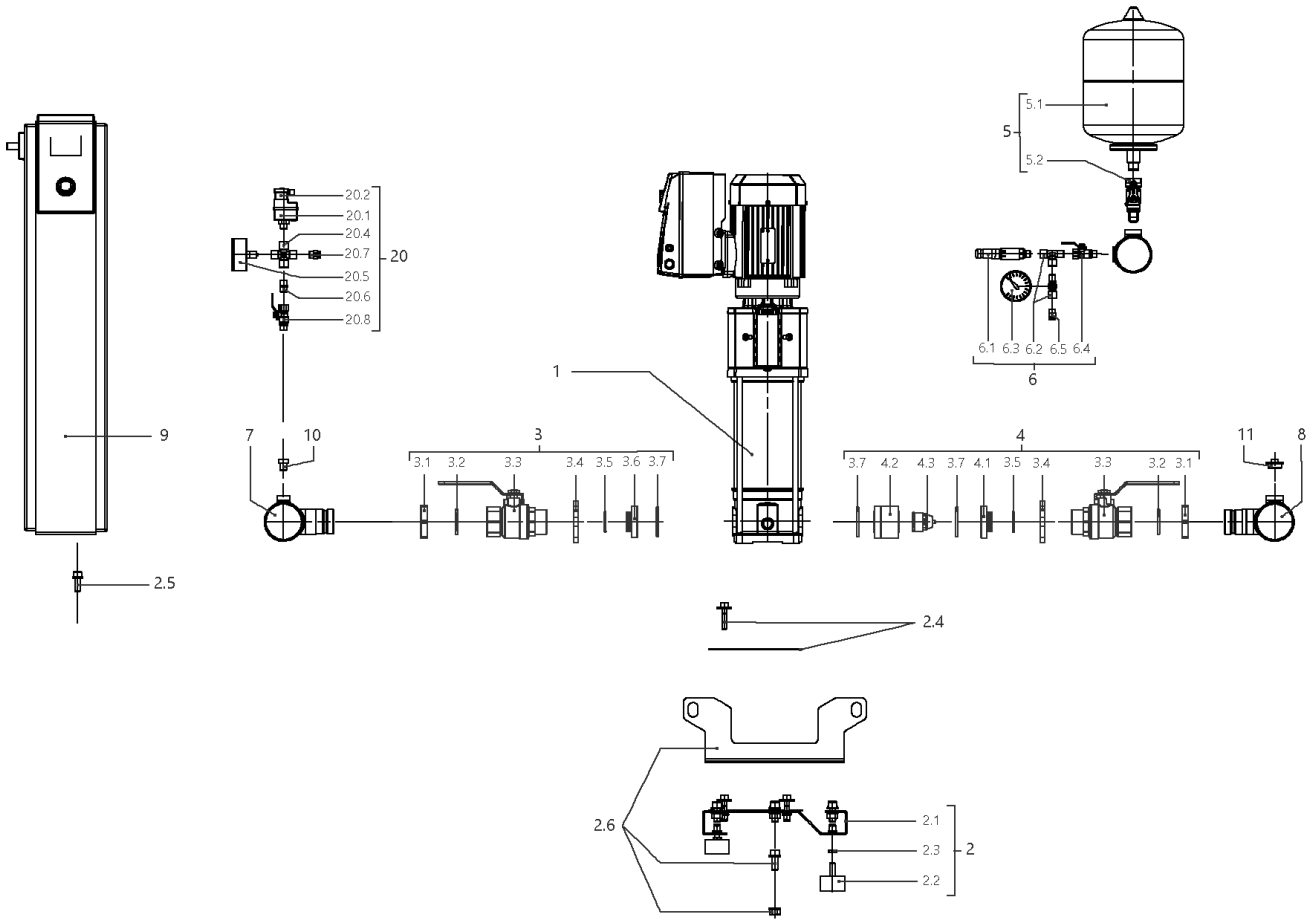
5.1
5
5.2
20.2
20.1
20.4
20.7
20
20.5
20.6
20.8
6.1 6.3 6.2 6.5 6.4
6
1
9
7
10
3
3.1 3.2 3.3 3.4 3.5 3.6 3.7
4
3.7 4.2 4.3 3.7 4.1 3.5 3.4 3.3 3.2 3.1
11
8
2.5
2.4
2.6
2.1
2.3
2
2.2

## SiBoost Smart 2HELIX VE403 (2537330)

| Item | Article no. | Description | Quantity |
|---|---|---|---|
| 1 | | HELIX VE403-1/16/E/S | 1 |
| Note: TO / BIS / JUSQU'AU 31/03/2016 | | | |
| 1 | 4201567 | HELIX VE403-1/16/E/S | 1 |
| Note: FROM / AB / À PARTIR DU 01/04/2016 | | | |
| 2 | 4199874 | BASE PLATE DE2 850x300 M10 KIT | 1 |
| 2.1 | | > BASEPLATE_2x4/6/10V_E300_850x300_BOX_150 | 1 |
| 2.2 | 2028654 | > VIBRATION DAMPER D.50X30 M10X28 | 1 |
| 2.3 | 2028281 | > NUT M10 DIN936 (ISO4035) 17H VZ | 1 |
| 2.4 | 4199875 | > HOLDER PUMP Siboost Helix V2/4 KIT | 1 |
| 2.5 | 4197084 | > HOLDER SWITCHBOX WILO Smart Control KIT | 1 |
| 2.6 | 4197085 | > LIFTING Siboost HELIX SC KIT | 1 |
| 3 | 4199876 | SUCTION SIDE Siboost Helix V2/4/6 KIT | 1 |
| 3.1 | 2032610 | > NUT G11/4 MS VP. | 1 |
| 3.2 | 2032611 | > O-RING ID.36,09X3,53N DIN3771 E7502 | 1 |
| 3.3 | 2507646 | > BALL VALVE G11/4"M-F-W.HANDLE 1/4-TURN | 1 |
| 3.4 | 2032613 | > SCREWED FLANGE G1 1/4" LK-75 ST37VZ | 1 |
| 3.5 | 2032614 | > O-RING ID.29,82X2,62N DIN3771 E7502 | 1 |
| 3.6 | 2032615 | > SPACER F.I/A KUH.DN32 CUZN | 1 |
| 3.7 | 2032616 | > O-RING ID.44X3,53N DIN3771 E7502 | 1 |
| 4 | 4199877 | DELIVERY SIDE Siboost Helix V2/4/6 KIT | 1 |
| 3.1 | 2032610 | > NUT G11/4 MS VP. | 1 |
| 3.2 | 2032611 | > O-RING ID.36,09X3,53N DIN3771 E7502 | 1 |
| 3.3 | 2507646 | > BALL VALVE G11/4"M-F-W.HANDLE 1/4-TURN | 1 |
| 3.4 | 2032613 | > SCREWED FLANGE G1 1/4" LK-75 ST37VZ | 1 |
| 3.5 | 2032614 | > O-RING ID.29,82X2,62N DIN3771 E7502 | 1 |
| 4.1 | 2058116 | > SPACER F.I/A KUH.DN32 CUZN | 1 |
| 3.7 | 2032616 | > O-RING ID.44X3,53N DIN3771 E7502 | 1 |
| 4.2 | 2058115 | > HOUSING RFV(RV-IN) DN32 SGS/DRS | 1 |
| 4.3 | 2027870 | > NON-RETURN-DEVICE INSERT DN32(MTR) | 1 |
| 5 | 2032642 | DIAPHREM TANK 8L/PN16 DIN4807/T5 KIT | 1 |
| 5.1 | 2045914 | > DIAPHREM TANK 8L TYP-DD 16BAR | 1 |
| 5.2 | 2027853 | > FLOW FITTING G3/4 FOR DIAPHRAGM VES. | 1 |
| 6 | 4197076 | PRESSURE SENSOR/ GAUGE 0-16BAR KIT | 1 |
| 6.1 | 2085909 | > PRESS.SENSOR 1/4" 0-16BAR 4-20MA VP. | 1 |

| Item | Article no. | Description | Quantity |
|---|---|---|---|
| 6.2 | 4197077 | > T-PIECE 1/4" VP. | 1 |
| 6.3 | 2028692 | > PRESSURE GAUGE NG63-PN16-G1/4 | 1 |
| 6.4 | 2028291 | > BALL TAP R1/4" PN42 GIACOMINI R254DL | 1 |
| 6.5 | 2028691 | > BLOWGUN 1/4" MS 30BAR VP. | 1 |
| 7 | 4199878 | PIPE DE2 11/2''-2x11/4"+1x1/4x600 VP. | 1 |
| 8 | 4199879 | PIPE DE2 11/2''-2x11/4"+1x1/4+1x3/4x600 | 1 |
| 9 | | W-CTRL-SCE-B-2x0,55-1,5KW-T4-FM-ND1 | 1 |
| Note: TO / BIS / JUSQU'AU 18/05/2014 | | | |
| 9 | 2541913 | W-CTRL-SCE-B-2x10A-T34-FM-ND1-AVC-PKG | 1 |
| Note: FROM / AB / À PARTIR DU 19/05/2014 | | | |
| 10 | 4197079 | PLUG G1/4"x10 AISI304 KIT | 1 |
| 11 | 2032654 | PLUG R3/4" MS VIEGA 1751 | 1 |
| 20 | 2521150 | ASSEMBLY WMS. DE-EB. +VP | 1 |
| 20.1 | 2028652 | > PRESSURE SWITCH PS3-ASR 1/(1,3) VP. | 1 |
| 20.2 | 2130983 | > PLUG PS3-415 WITH KABEL 1,5M 2NO VP. | 1 |
| 20.4 | 2028290 | > CROSSPIECE R1/4" MS-NICKEL | 1 |
| 20.5 | 2028687 | > PRESSURE GAUGE NG63 R1/4" HI.0-6BAR | 1 |
| 20.6 | 2054268 | > DUAL NIPPLE G1/4" x G1/4" MS VP. | 1 |
| 20.7 | 2028691 | > BLOWGUN 1/4" MS 30BAR VP. | 1 |
| 20.8 | 2028291 | > BALL TAP R1/4" PN42 GIACOMINI R254DL | 1 |

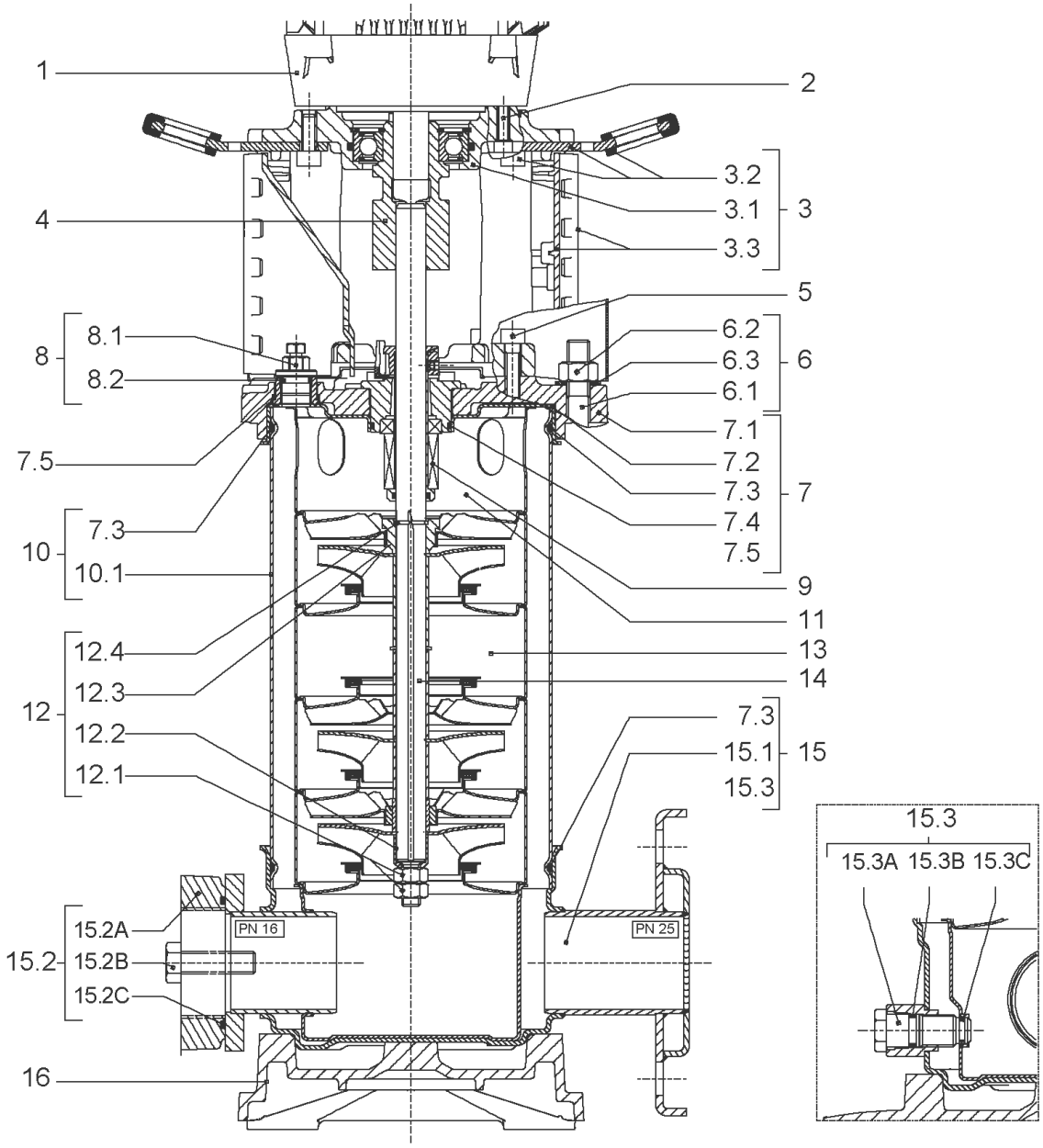
1
2
3.2
3.1
3
3.3
4
5
8.1
8
8.2
6.2
6.3
6
6.1
7.1
7.5
7.2
7.3
7
7.4
7.3
10
7.5
10.1
9
11
12.4
13
12.3
14
12
12.2
7.3
15.1
15
12.1
15.3
15.3
15.3A 15.3B 15.3C
15.2A
PN 16
PN 25
15.2
15.2B
15.2C
16

| Item | Article no. | Description | Quantity |
|---|---|---|---|
| 1 | | DRIVE HELIX-VE403-IE2-WE KIT | 1 |
| Note: MOTOR BRAND WILO ELEC | | | |
| 1 | | DRIVE HELIX-VE403-IE4-WE KIT | 1 |
| Note: MOTOR BRAND WILO ELEC | | | |
| 2 | 4159702 | SCREW M6X30 (4 PIECES) | 1 |
| 3 | 4171325 | LANTERN MONOBLOC FT85 HELIX KIT | 1 |
| 3.1 | | > M+5_6_LANTERN_ONE-PIECE_FT85_CATA | 1 |
| 3.2 | 2127604 | > EYELET CPL.FT HELIX(2 PIECES) | 1 |
| 3.3 | 4159692 | > COUPLING PROTECTOR FT HELIX KIT | 1 |
| 4 | 4178554 | COUPLING FT 85 Ø12XØ14 KIT | 1 |
| 5 | 4159707 | SCREW M8X30 (4 PIECES) | 1 |
| 6 | 4177803 | STUD BOLT M12X263 KIT | 1 |
| 6.1 | | > TIE BOLT M12-263x18x30-1.4057 | 1 |
| 6.2 | 2094647 | > NUT M12 M12 ISO4032 VP. | 1 |
| 6.3 | 2123557 | > WASHER CS-12.4-24-1.6-NFE25 (4 PIECES) | 1 |
| 7 | 4210143 | STATIONARY RING HOLDER HELIX 6" EPDM | 1 |
| 7.2 | 2127607 | > STATIONARY RING HOLDER 6" HELIX 1.4301 V | 1 |
| 7.3 | 4176513 | > O-RING FOR PUMP JACKET VP. | 1 |
| 7.4 | 2127603 | > O-RING ID.37,6x2,4 EPDM VP. | 1 |
| 7.5 | 2127602 | > O-RING ID.21,35x2 EPDM VP. | 1 |
| 8 | 4159686 | FILING/PURGING PLUG HELIX EPDM KIT | 1 |
| 9 | 4178564 | SEAL-KIT-HELIX2-4 O/E KIT | 1 |
| 10 | 4177804 | HOUSING PIPES D.152X134 1.4301 KIT | 1 |
| 7.3 | 4176513 | > O-RING FOR PUMP JACKET VP. | 1 |
| 10.1 | | > HOUSING-PIPE Ø152-M+1001/02-304 | 1 |
| 11 | 4178566 | CENTERING STAGE-RETURN HELIX4 1.4307 VP | 1 |
| 12 | 4178568 | SHAFT EQUIPMENT HELIX V2/V4 KIT | 1 |
| 12.1 | | > NUT-H-M8-STAINLESS-STEEL A4-70 | 2 |
| 12.2 | | > SHAFT END WASHER Ø8/Ø12 316L | 1 |
| 12.3 | | > STOP COLLAR OF IMPELLER M+2/4 SINGLEBLOC | 1 |
| 12.4 | | > STOP-RUSH-1/2-D12xd2-M+316 | 2 |
| 13 | | HYDRAULIC HELIX V 403 1.4307 | 1 |
| 14 | 4178575 | SHAFT D.12X258 1.4301 VP. | 1 |
| 15 | 4174079 | PUMP HOUSING HELIX DN32 PN16 1.4301 KIT | 1 |

| Item | Article no. | Description | Quantity |
|---|---|---|---|
| 7.3 | 4176513 | > O-RING FOR PUMP JACKET VP. | 1 |
| 15.1 | | > BLASTING PPE HOUSING V-PN16-DN32-5"-304 | 1 |
| 15.2 | 4217889 | > COUNTER FLANGE-G1"-PN16-GJL KIT | 1 |
| 15.3 | 4171321 | > PRIMING/DRAIN PLUG EPDM HELIX KIT | 1 |
| 16 | 4177964 | BASEPLATE HELIX V2/4/6 PN16 VP. | 1 |

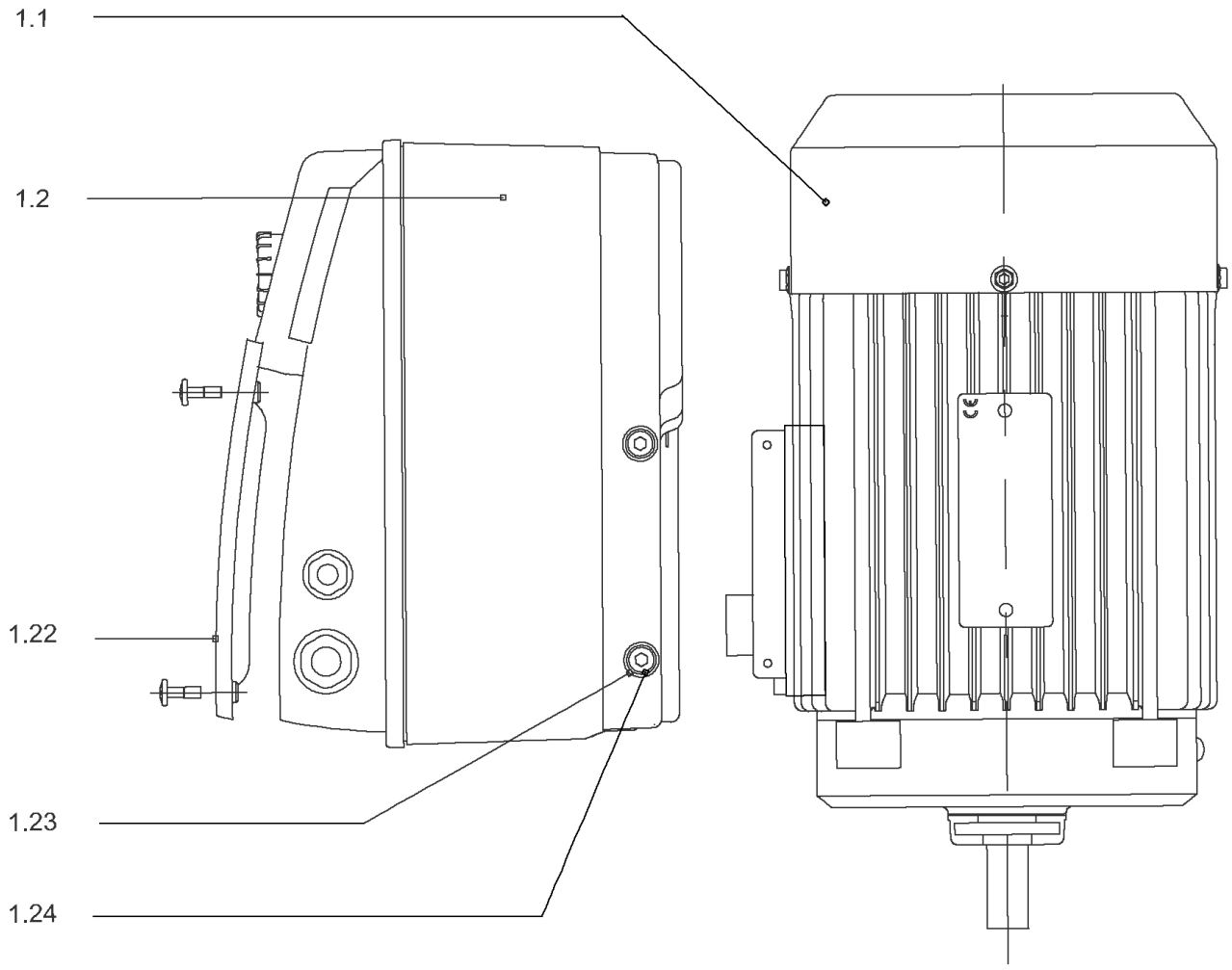
1.1
1.2
1.22
1.23
1.24

## DRIVE HELIX-VE403-IE2-WE KIT

| Item | Article no. | Description | Quantity |
|---|---|---|---|
| 1.1 | | MOTOR 0,55/2/80 3~ 380V 60HZ IE2 WE VP. | 1 |
| Note: no longer available/nicht mehrlieferbar/n'est plus disponible | | | |
| | | SPARE PARTS MOTOR:ON REQUEST | 1 |
| 1.2 | 4184869 | MODULE HELIX-VE403-IE2-WE KIT | 1 |
| 1.22 | 2054372 | > MODULE COVER TL1,TL2+GASKET KIT | 1 |
| 1.23 | 4215716 | > SCREW M5X16 DIN912 8.8 A2A (4pieces) VP. | 1 |
| 1.24 | 2057978 | > RONDELLE A5,3 DIN6797 FST ZN (4 PIECES) | 1 |

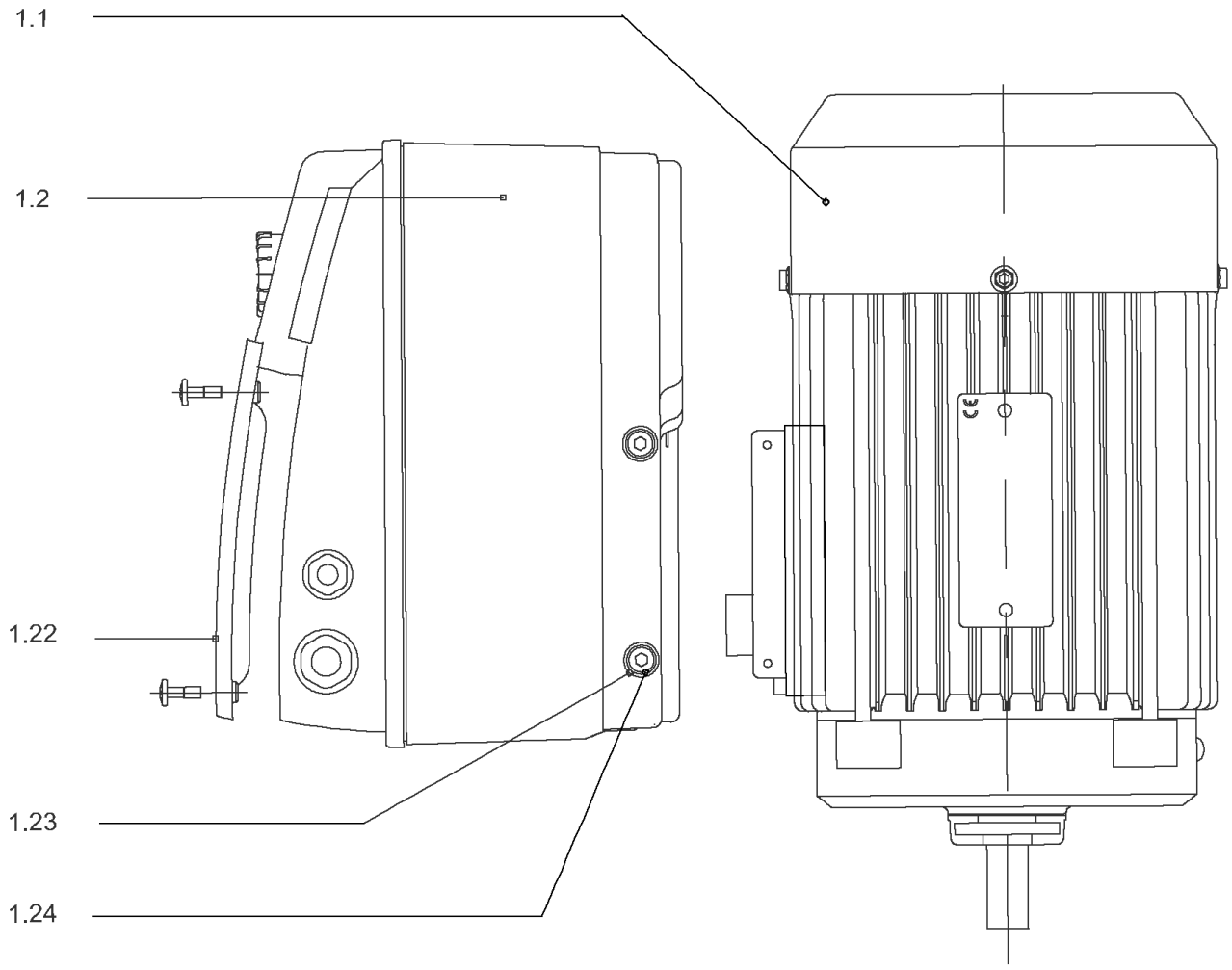
1.1
1.2
1.22
1.23
1.24

## DRIVE HELIX-VE403-IE4-WE KIT

| Item | Article no. | Description | Quantity |
|---|---|---|---|
| 1.1 | 4207912 | MOTOR 0.55/2/71 3~ 380V 60HZ IE4 WE VP. | 1 |
| | | SPARE PARTS MOTOR:ON REQUEST | 1 |
| 1.2 | 4209319 | MODULE HELIX-VE403-IE4-WE KIT | 1 |
| 1.22 | 2054372 | > MODULE COVER TL1,TL2+GASKET KIT | 1 |
| 1.23 | 4215716 | > SCREW M5X16 DIN912 8.8 A2A (4pieces) VP. | 1 |
| 1.24 | 2057978 | > RONDELLE A5,3 DIN6797 FST ZN (4 PIECES) | 1 |

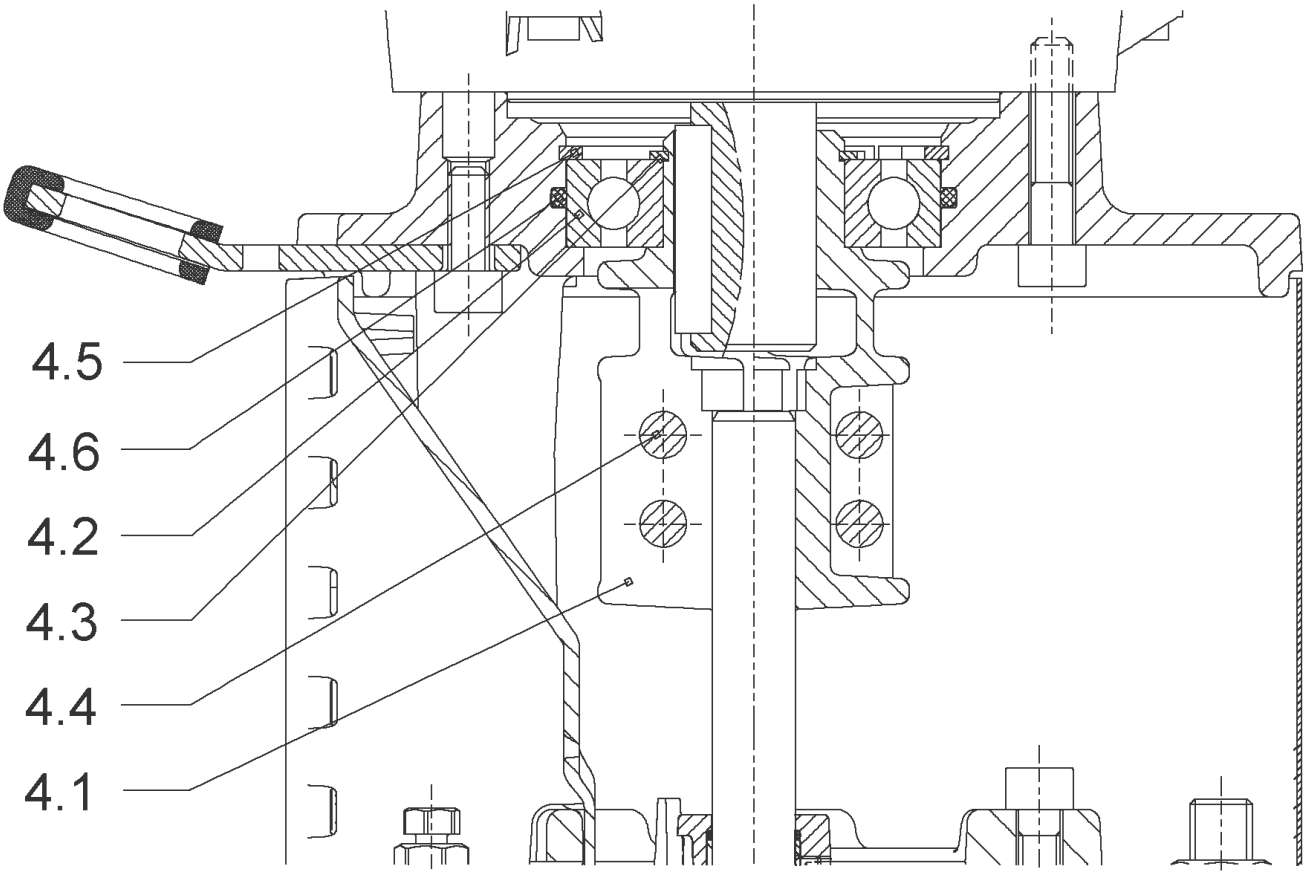
4.5
4.6
4.2
4.3
4.4
4.1

## COUPLING FT 85 Ø12XØ14 KIT (4178554)

| Item | Article no. | Description | Quantity |
|---|---|---|---|
| 4.1 | | COUPLING-M+ Ø12XØ14-FT85-MACHINED | 1 |
| 4.3 | 4208923 | CIRCLIP D25X1.2 VP. | 1 |
| 4.2 | 4177802 | BALL BEARING 6205C3-ZZ HTVP. | 1 |
| 4.4 | 4212716 | SCREW M6X20 KIT (4PIECES) | 1 |
| 4.5 | 4233124 | CIRCLIP-FOR-BORES-D52x2 VP. | 1 |
| 4.6 | 4234244 | O-RING 52X2 VP. | 1 |
| | | CONTACT-WASHER-6ETR-6,1x12,2x1,8-STEEL | 4 |

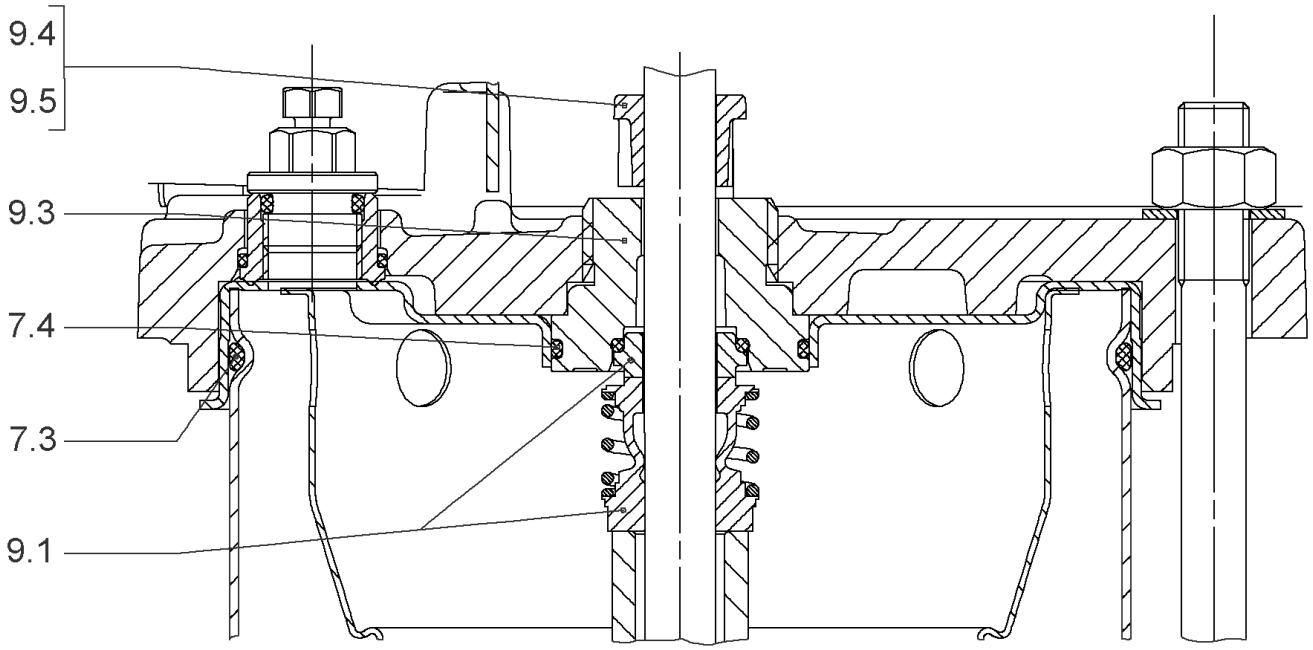
9.4
9.5
9.3
7.4
7.3
9.1

## SEAL-KIT-HELIX2-4 O/E KIT (4178564)

| Item | Article no. | Description | Quantity |
|---|---|---|---|
| 7.3 | 4176513 | O-RING FOR PUMP JACKET VP. | 1 |
| 7.4 | 2127603 | O-RING ID.37,6x2,4 EPDM VP. | 1 |
| 9.1 | 4178563 | M.SEAL.HELIX2-4 O/E VP. | 1 |
| 9.3 | 4178561 | RING HOLDER Ø22 1.4301 VP. | 1 |
| 9.5 | 4178562 | DRIVE RING D.22/12.2X10 MACH.VP. | 1 |
| 9.4 | 4176520 | SCREW CH M5x5 A4-70 ( 3PIECES ) | 1 |

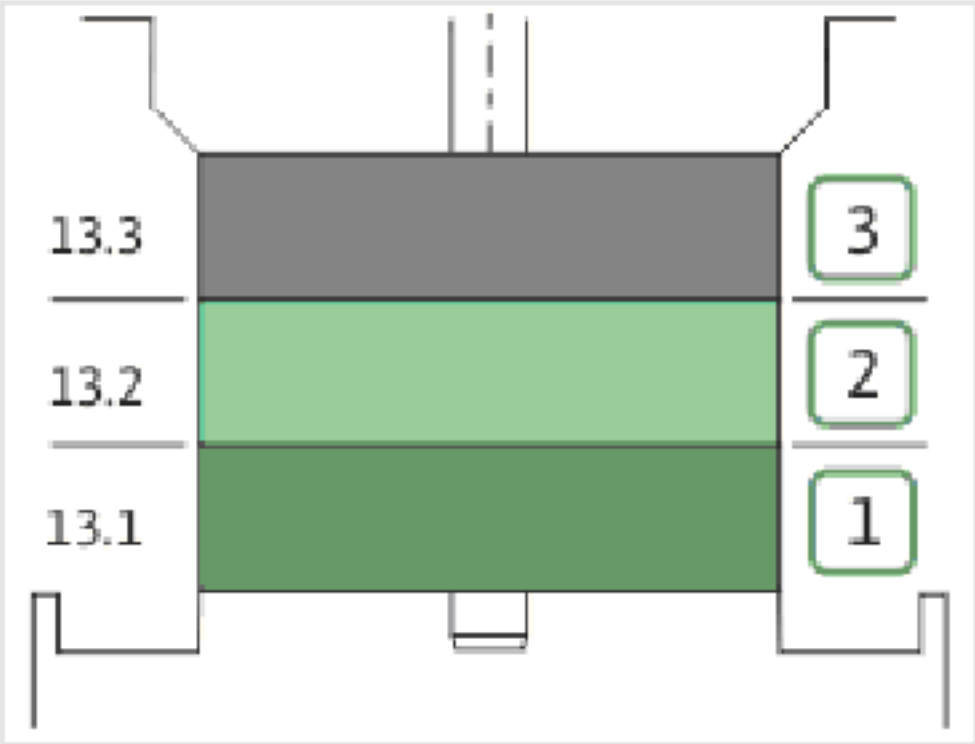
13.3
13.2
13.1
3
2
1

| Item | Article no. | Description | Quantity |
|---|---|---|---|
| 13.1 | 4178570 | STAGE HELIX 4 1.4301 KIT | 1 |
| | | > MACH.STG-CASING-WOGV-WNR-M+2-4-304 | 1 |
| | | > IMPELLER-M+4-304 | 1 |
| 13.2 | 4178569 | STAGE BEARING HELIX 4 1.4301 KIT | 1 |
| | | > MACH.BEARING-STG-CASING-WNR-M+4-304 | 1 |
| | | > IMPELLER-M+4-304 | 1 |
| | | > SHAFT SLEEVE SPACER Ø15,35x10,305-304 | 1 |
| | | > SHAFT-SLEEVE-D12xD16x14-CW | 1 |
| 13.3 | 4178574 | INTER STAGE HELIX4 1.4301< 15 stages KIT | 1 |
| | | > MACH.STD-STG-CASING-WGV+NR-M+4-304 | 1 |
| | | > IMPELLER-M+4-304 | 1 |
| | | > IMPELLER SPACER Ø12,05X14,85-L24,285-304 | 1 |

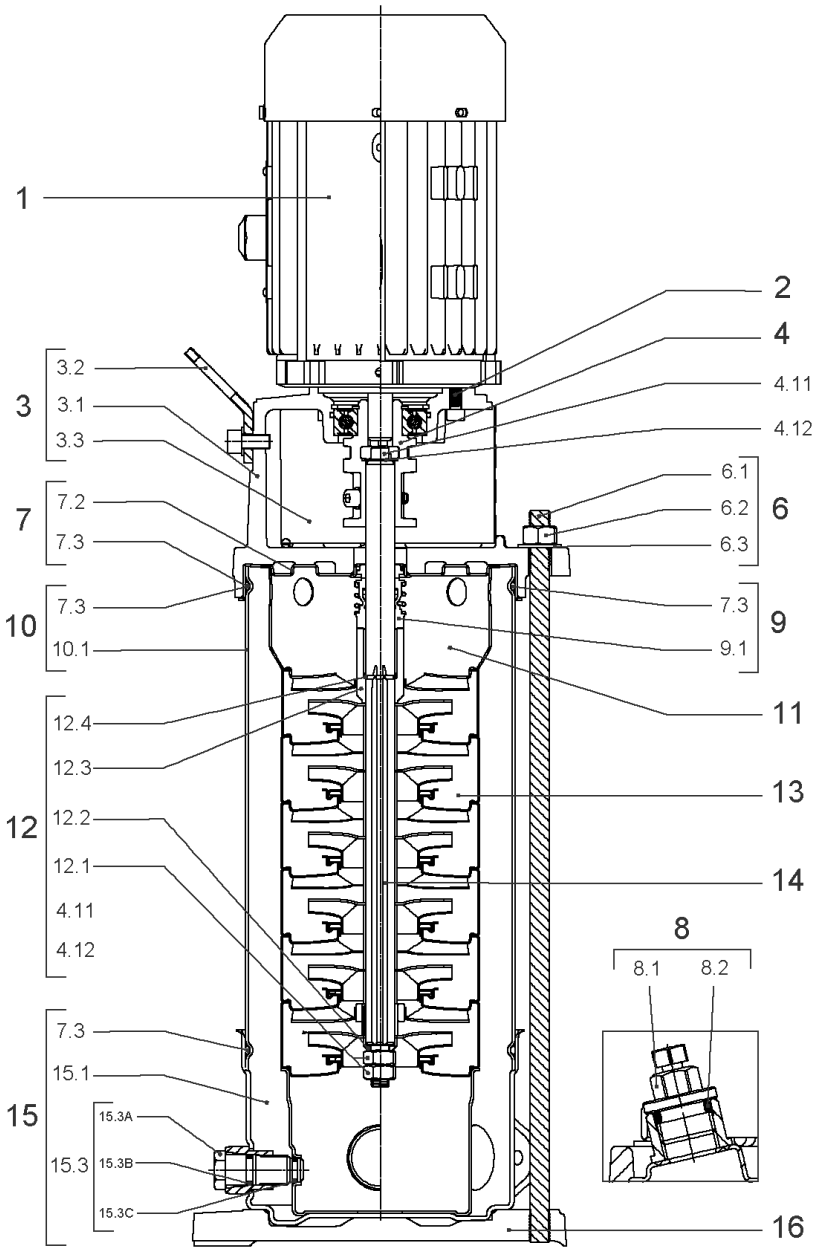
1
2
4
4.11
4.12
3
3.2
3.1
3.3
7
7.2
7.3
6
6.1
6.2
6.3
10
7.3
10.1
9
7.3
9.1
11
12
12.4
12.3
12.2
12.1
4.11
4.12
13
14
8
8.1
8.2
15
7.3
15.1
15.3
15.3A
15.3B
15.3C
16

## HELIX VE403-1/16/E/S (4201567)

| Item | Article no. | Description | Quantity |
|---|---|---|---|
| 1 | | DRIVE HELIX-VE403-IE4-WE KIT | 1 |
| Note: MOTOR BRAND WILO ELEC | | | |
| | | SPARE PARTS MOTOR:ON REQUEST | 1 |
| 2 | 4212716 | SCREW M6X20 KIT (4PIECES) | 1 |
| 3 | 4213715 | LANTERN FT85 HELIX KIT | 1 |
| 3.1 | | > LANT-MOT-VMI-ReDTC6"-FT85-MACHINED+CATA | 1 |
| 3.2 | 4184852 | > EYELET CPL.FT HELIX (2 PIECES) | 1 |
| 3.3 | 4213713 | > COUPLING PROTECTOR FT85/100 HELIX KIT | 1 |
| 4 | 4212718 | COUPLING HELIX D12 FT85 KIT | 1 |
| 6 | 4177803 | STUD BOLT M12X263 KIT | 1 |
| 6.1 | | > TIE BOLT M12-263x18x30-1.4057 | 1 |
| 6.2 | 2094647 | > NUT M12 M12 ISO4032 VP. | 1 |
| 6.3 | 2123557 | > WASHER CS-12.4-24-1.6-NFE25 (4 PIECES) | 1 |
| 7 | 4212722 | STATIONARY RING HOLDER HELIX D23 ReDTC | 1 |
| 7.2 | 4212720 | > STATIONARY RING HOLDER HELIX D23 VP. | 1 |
| 7.3 | 4176513 | > O-RING FOR PUMP JACKET VP. | 1 |
| 8 | 4212724 | FILING/PURGING PLUG HELIX ReDTC KIT | 1 |
| 8.1 | | > FILLING PLUG MVI6"-304 | 1 |
| 8.2 | 4177800 | > O-RING EPDM PLUG HELIX VP. | 1 |
| 9 | 4212726 | MECH.SEAL HELIX V2/4 O/E ReDTC KIT | 1 |
| 9.1 | 4178563 | > M.SEAL.HELIX2-4 O/E VP. | 1 |
| 7.3 | 4176513 | > O-RING FOR PUMP JACKET VP. | 1 |
| 10 | 4177804 | HOUSING PIPES D.152X134 1.4301 KIT | 1 |
| 7.3 | 4176513 | > O-RING FOR PUMP JACKET VP. | 1 |
| 10.1 | | > HOUSING-PIPE Ø152-M+1001/02-304 | 1 |
| 11 | 4178566 | CENTERING STAGE-RETURN HELIX4 1.4307 VP | 1 |
| 12 | 4212729 | SHAFT EQUIPMENT HELIX V2/4 ReDTC KIT | 1 |
| 12.1 | | > NUT-H-M8-STAINLESS-STEEL A4-70 | 1 |
| 12.2 | | > SHAFT END WASHER Ø8/Ø12 316L | 1 |
| 12.3 | | > 1/2-SNAP-RING-2/4M3-316L | 1 |
| 12.4 | | > STOP-RUSH-1/2-D12xd2-M+316 | 1 |
| 4.11 | | > SCREW CHC-M6X14-8.8-ISO4762-GEOMET500A | 1 |
| 4.12 | | > WASHER D.24 L6U ZINK | 1 |
| 13 | | HYDRAULIC HELIX V 403 1.4307 | 1 |

## HELIX VE403-1/16/E/S (4201567)

| Item | Article no. | Description | Quantity |
|---|---|---|---|
| 15 | 4174079 | PUMP HOUSING HELIX DN32 PN16 1.4301 KIT | 1 |
| 7.3 | 4176513 | > O-RING FOR PUMP JACKET VP. | 1 |
| 15.1 | | > BLASTING PPE HOUSING V-PN16-DN32-5"-304 | 1 |
| 15.2 | 4217889 | > COUNTER FLANGE-G1"-PN16-GJL KIT | 1 |
| 15.3 | 4171321 | > PRIMING/DRAIN PLUG EPDM HELIX KIT | 1 |
| 16 | 4177964 | BASEPLATE HELIX V2/4/6 PN16 VP. | 1 |

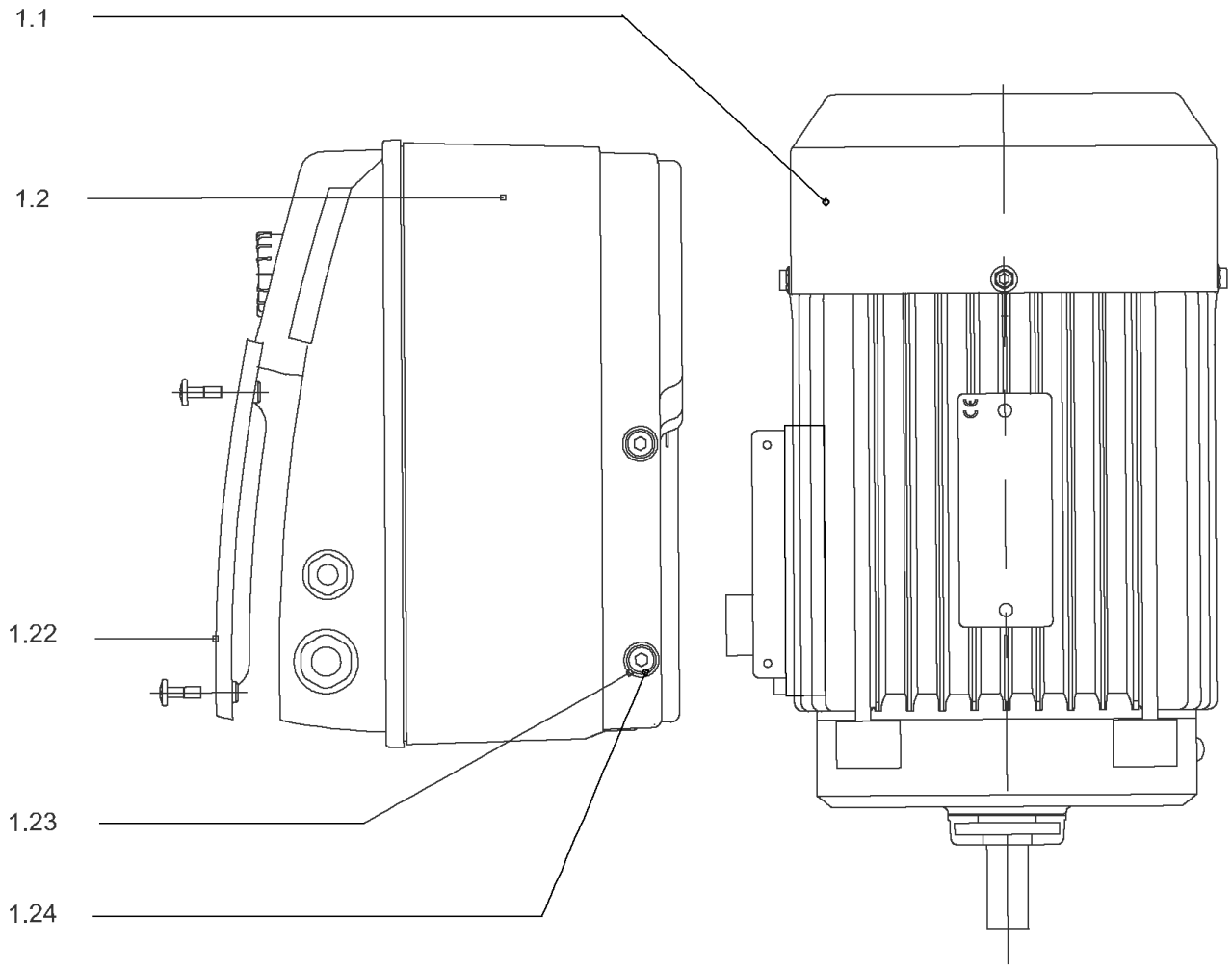
1.1
1.2
1.22
1.23
1.24

## DRIVE HELIX-VE403-IE4-WE KIT

| Item | Article no. | Description | Quantity |
|---|---|---|---|
| 1.1 | 4207912 | MOTOR 0.55/2/71 3~ 380V 60HZ IE4 WE VP. | 1 |
| | | SPARE PARTS MOTOR:ON REQUEST | 1 |
| 1.2 | 4209319 | MODULE HELIX-VE403-IE4-WE KIT | 1 |
| 1.22 | 2054372 | > MODULE COVER TL1,TL2+GASKET KIT | 1 |
| 1.23 | 4215716 | > SCREW M5X16 DIN912 8.8 A2A (4pieces) VP. | 1 |
| 1.24 | 2057978 | > RONDELLE A5,3 DIN6797 FST ZN (4 PIECES) | 1 |

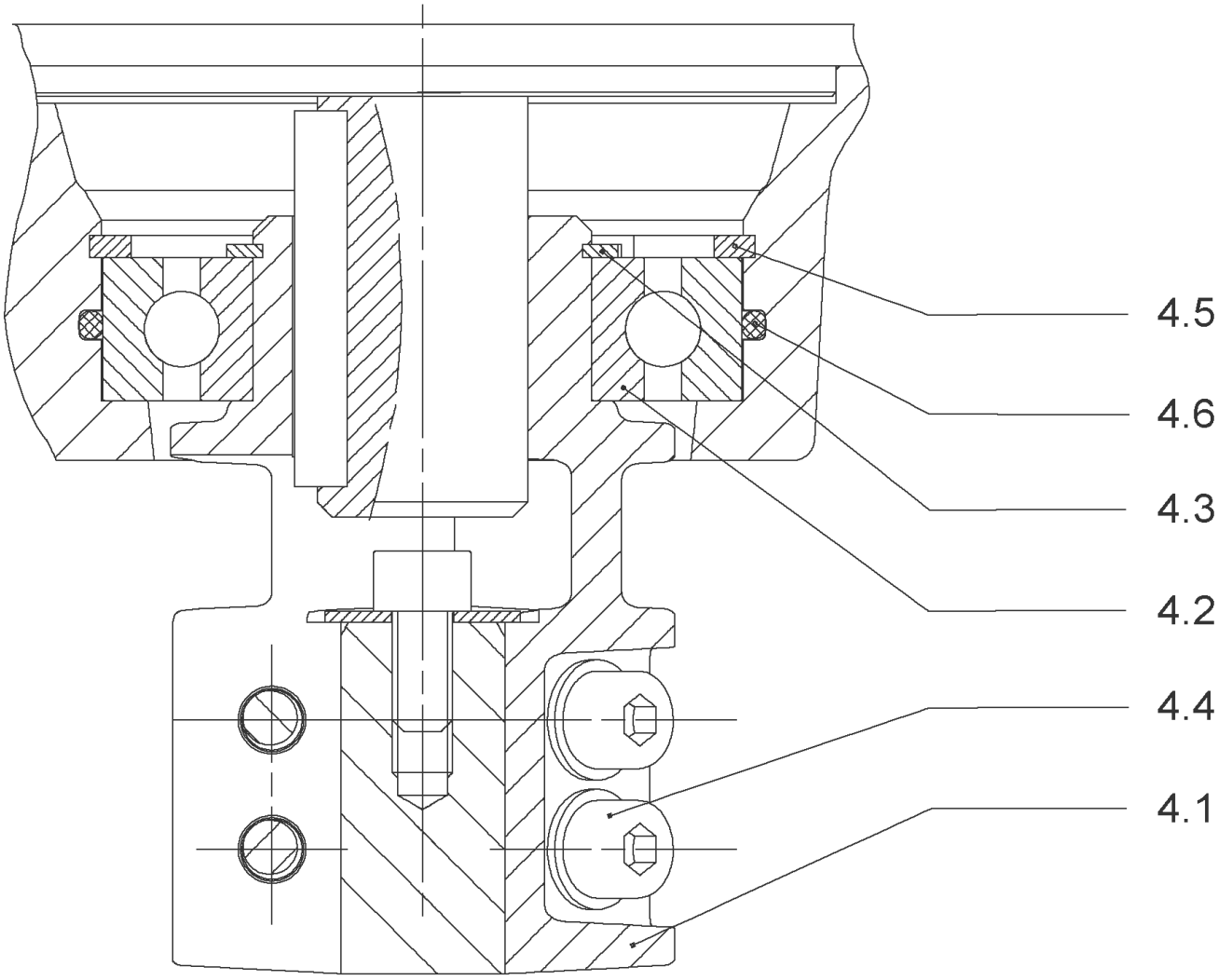
4.5
4.6
4.3
4.2
4.4
4.1

## COUPLING HELIX D12 FT85 KIT (4212718)

| Item | Article no. | Description | Quantity |
|---|---|---|---|
| 4.1 | | COUPLING-VMI-Ø12xØ14-FT85-USINE | 1 |
| 4.2 | 4177802 | BALL BEARING 6205C3-ZZ HTVP. | 1 |
| 4.3 | 4208923 | CIRCLIP D25X1.2 VP. | 1 |
| 4.4 | 4212716 | SCREW M6X20 KIT (4PIECES) | 1 |
| 4.5 | 4233124 | CIRCLIP-FOR-BORES-D52x2 VP. | 1 |
| 4.6 | 4234244 | O-RING 52X2 VP. | 1 |
| | | CONTACT-WASHER-6ETR-6,1x12,2x1,8-STEEL | 1 |

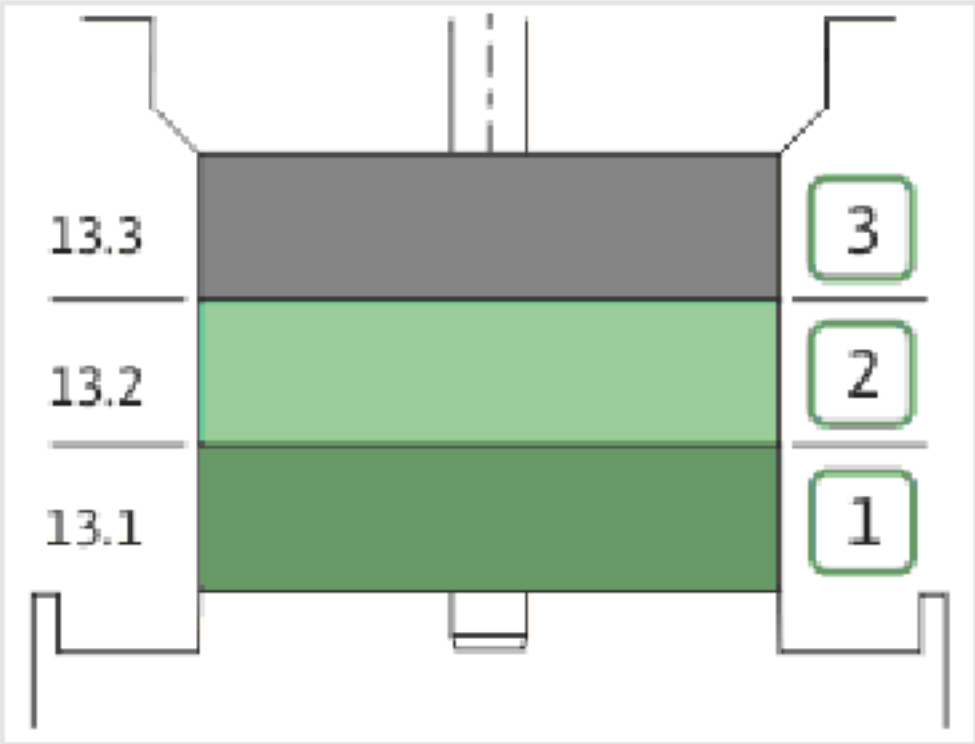
13.3
13.2
13.1
3
2
1

| Item | Article no. | Description | Quantity |
|---|---|---|---|
| 13.1 | 4178570 | STAGE HELIX 4 1.4301 KIT | 1 |
| | | > MACH.STG-CASING-WOGV-WNR-M+2-4-304 | 1 |
| | | > IMPELLER-M+4-304 | 1 |
| 13.2 | 4178569 | STAGE BEARING HELIX 4 1.4301 KIT | 1 |
| | | > MACH.BEARING-STG-CASING-WNR-M+4-304 | 1 |
| | | > IMPELLER-M+4-304 | 1 |
| | | > SHAFT SLEEVE SPACER Ø15,35x10,305-304 | 1 |
| | | > SHAFT-SLEEVE-D12xD16x14-CW | 1 |
| 13.3 | 4178574 | INTER STAGE HELIX4 1.4301< 15 stages KIT | 1 |
| | | > MACH.STD-STG-CASING-WGV+NR-M+4-304 | 1 |
| | | > IMPELLER-M+4-304 | 1 |
| | | > IMPELLER SPACER Ø12,05X14,85-L24,285-304 | 1 |

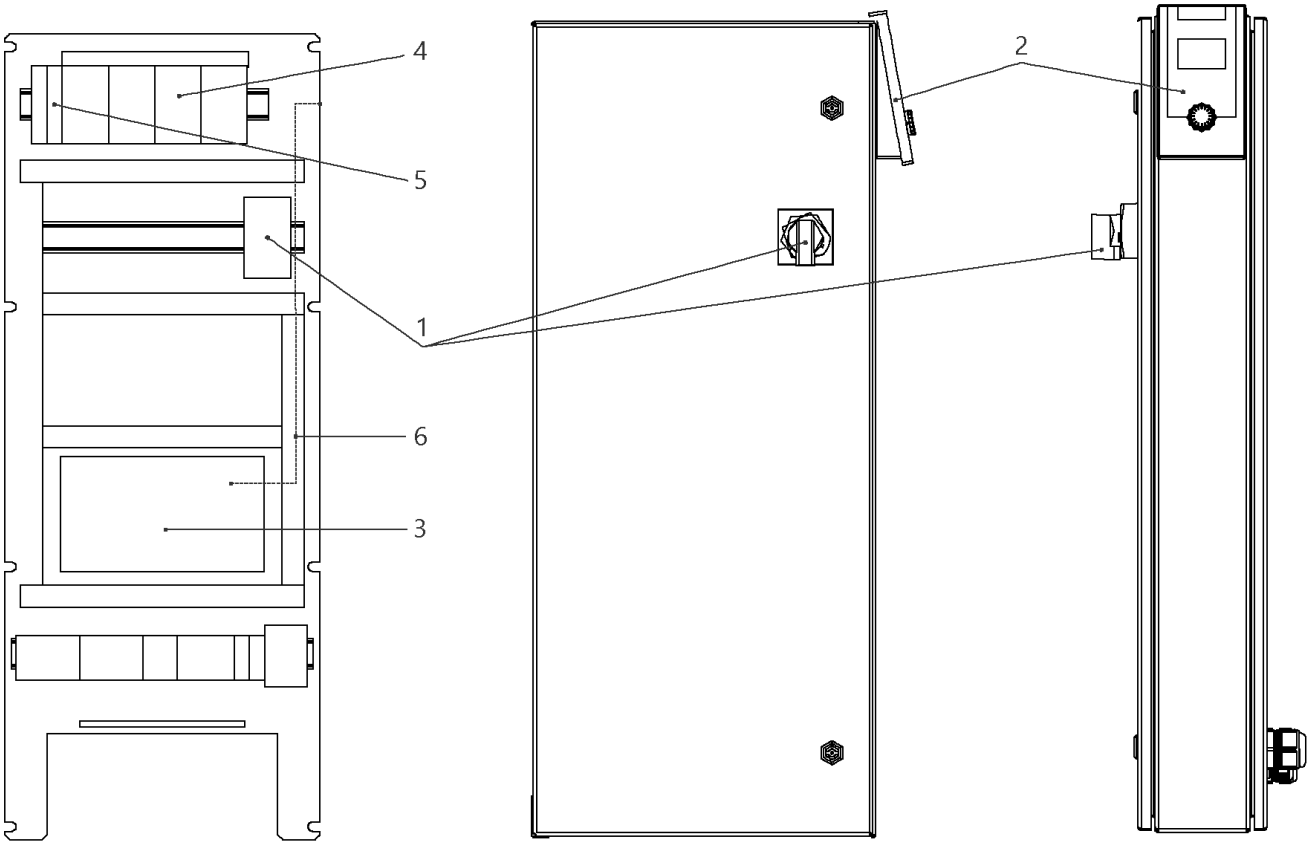
4
5
1
6
3
2

## W-CTRL-SCE-B-2x0,55-1,5KW-T4-FM-ND1

| Item | Article no. | Description | Quantity |
|---|---|---|---|
| 1 | 2104470 | MAIN SWITCH OT40F3 L250 KIT | 1 |
| 2 | 4184784 | CONTROL PANEL HMI SC KIT | 1 |
| 2 | 4185259 | ASSEMBLY DISPLAY SC PKG VP. | 1 |
| 3 | 4185257 | ASSEMBLY CPU SCe Booster VP. | 1 |
| 4 | 2051217 | AUTOM.CIRCUIT BREAKER S203 B16 TO7,5kW | 1 |
| 5 | 2046288 | CIRCUIT BREAKER S201 B16 | 1 |
| 6 | 4197081 | CABLE RJ45 CAT6 0,5M RED SC-PANEL VP. | 1 |

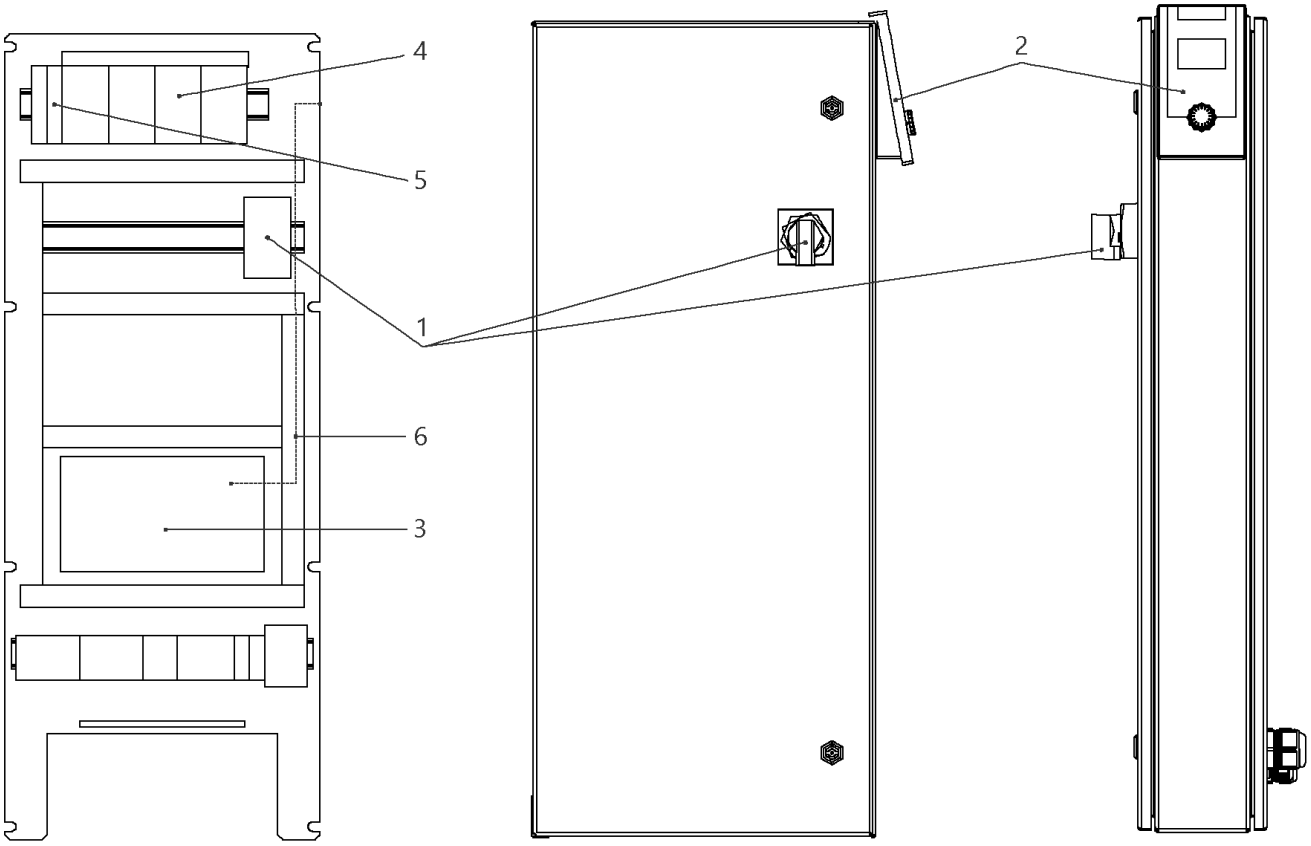
4
5
1
6
3
2

## W-CTRL-SCE-B-2x10A-T34-FM-ND1-AVC-PKG (2541913)

| Item | Article no. | Description | Quantity |
|---|---|---|---|
| 1 | 2104470 | MAIN SWITCH OT40F3 L250 KIT | 1 |
| 2 | 4184784 | CONTROL PANEL HMI SC KIT | 1 |
| 2 | 4185259 | ASSEMBLY DISPLAY SC PKG VP. | 1 |
| Note: DISPLAY ALONE / PLATINE SEULE | | | |
| 3 | 4185257 | ASSEMBLY CPU SCe Booster VP. | 1 |
| 4 | 2119861 | AUTOMATIC CIRCUIT BREAKER S203 B13 3POL. | 1 |
| 5 | 2046288 | CIRCUIT BREAKER S201 B16 | 1 |
| 6 | 4197081 | CABLE RJ45 CAT6 0,5M RED SC-PANEL VP. | 1 |

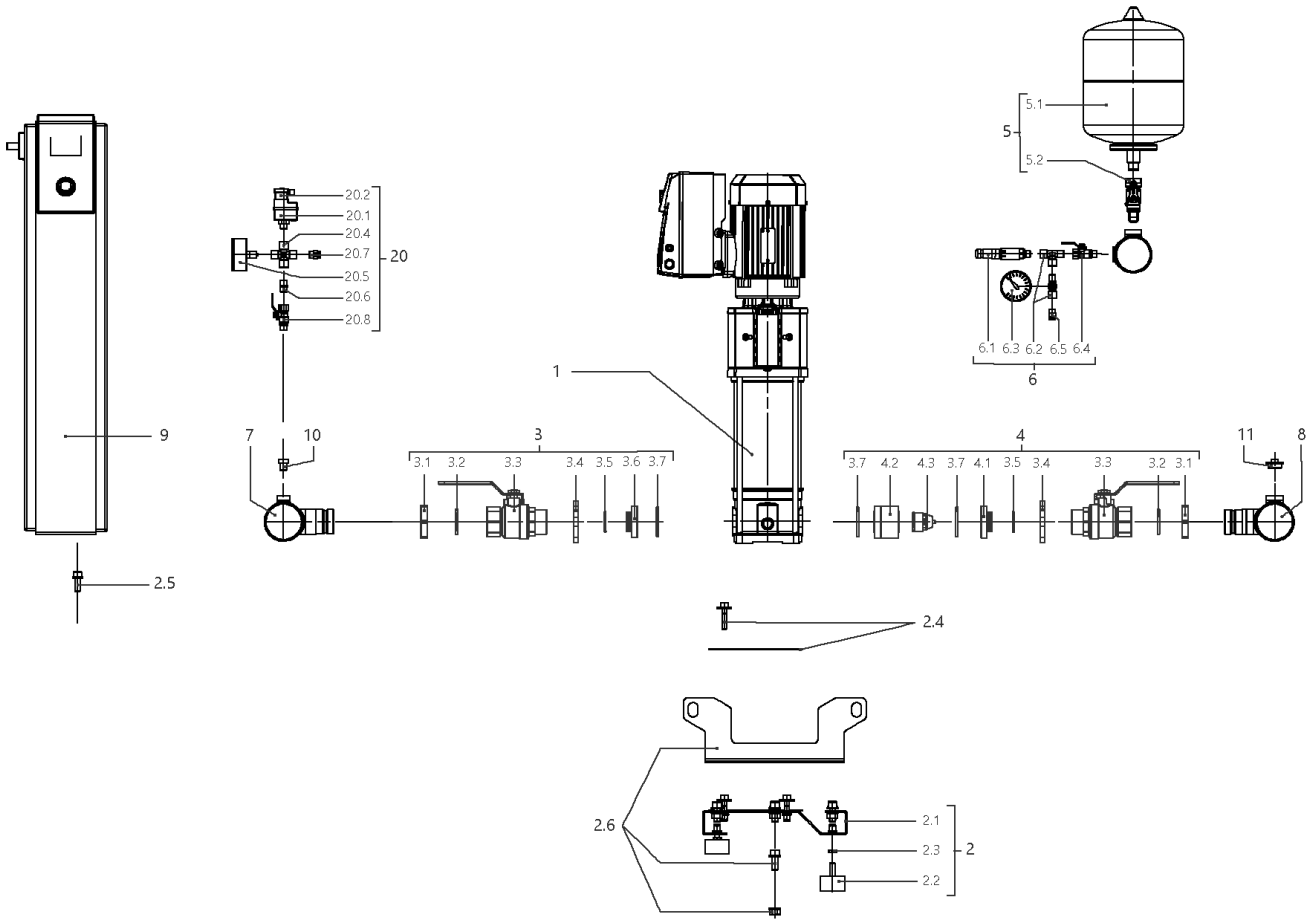
5.1
5
5.2
20.2
20.1
20.4
20.7
20
20.5
20.6
20.8
6.1 6.3 6.2 6.5 6.4
6
1
9
7
10
3
3.1 3.2 3.3 3.4 3.5 3.6 3.7
4
3.7 4.2 4.3 3.7 4.1 3.5 3.4 3.3 3.2 3.1
11
8
2.5
2.4
2.6
2.1
2.3
2
2.2

## SiBoost Smart 2HELIX VE404 (2537358)

| Item | Article no. | Description | Quantity |
|---|---|---|---|
| 1 | | HELIX VE404-1/16/E/S | 1 |
| Note: TO / BIS / JUSQU'AU 31/03/2016 | | | |
| 1 | 4201569 | HELIX VE404-1/16/E/S | 1 |
| Note: FROM / AB / À PARTIR DU 01/04/2016 | | | |
| 2 | 4199874 | BASE PLATE DE2 850x300 M10 KIT | 1 |
| 2.1 | | > BASEPLATE_2x4/6/10V_E300_850x300_BOX_150 | 1 |
| 2.2 | 2028654 | > VIBRATION DAMPER D.50X30 M10X28 | 1 |
| 2.3 | 2028281 | > NUT M10 DIN936 (ISO4035) 17H VZ | 1 |
| 2.4 | 4199875 | > HOLDER PUMP Siboost Helix V2/4 KIT | 1 |
| 2.5 | 4197084 | > HOLDER SWITCHBOX WILO Smart Control KIT | 1 |
| 2.6 | 4197085 | > LIFTING Siboost HELIX SC KIT | 1 |
| 3 | 4199876 | SUCTION SIDE Siboost Helix V2/4/6 KIT | 1 |
| 3.1 | 2032610 | > NUT G11/4 MS VP. | 1 |
| 3.2 | 2032611 | > O-RING ID.36,09X3,53N DIN3771 E7502 | 1 |
| 3.3 | 2507646 | > BALL VALVE G11/4"M-F-W.HANDLE 1/4-TURN | 1 |
| 3.4 | 2032613 | > SCREWED FLANGE G1 1/4" LK-75 ST37VZ | 1 |
| 3.5 | 2032614 | > O-RING ID.29,82X2,62N DIN3771 E7502 | 1 |
| 3.6 | 2032615 | > SPACER F.I/A KUH.DN32 CUZN | 1 |
| 3.7 | 2032616 | > O-RING ID.44X3,53N DIN3771 E7502 | 1 |
| 4 | 4199877 | DELIVERY SIDE Siboost Helix V2/4/6 KIT | 1 |
| 3.1 | 2032610 | > NUT G11/4 MS VP. | 1 |
| 3.2 | 2032611 | > O-RING ID.36,09X3,53N DIN3771 E7502 | 1 |
| 3.3 | 2507646 | > BALL VALVE G11/4"M-F-W.HANDLE 1/4-TURN | 1 |
| 3.4 | 2032613 | > SCREWED FLANGE G1 1/4" LK-75 ST37VZ | 1 |
| 3.5 | 2032614 | > O-RING ID.29,82X2,62N DIN3771 E7502 | 1 |
| 4.1 | 2058116 | > SPACER F.I/A KUH.DN32 CUZN | 1 |
| 3.7 | 2032616 | > O-RING ID.44X3,53N DIN3771 E7502 | 1 |
| 4.2 | 2058115 | > HOUSING RFV(RV-IN) DN32 SGS/DRS | 1 |
| 4.3 | 2027870 | > NON-RETURN-DEVICE INSERT DN32(MTR) | 1 |
| 5 | 2032642 | DIAPHREM TANK 8L/PN16 DIN4807/T5 KIT | 1 |
| 5.1 | 2045914 | > DIAPHREM TANK 8L TYP-DD 16BAR | 1 |
| 5.2 | 2027853 | > FLOW FITTING G3/4 FOR DIAPHRAGM VES. | 1 |
| 6 | 4197076 | PRESSURE SENSOR/ GAUGE 0-16BAR KIT | 1 |
| 6.1 | 2085909 | > PRESS.SENSOR 1/4" 0-16BAR 4-20MA VP. | 1 |

| Item | Article no. | Description | Quantity |
|---|---|---|---|
| 6.2 | 4197077 | > T-PIECE 1/4" VP. | 1 |
| 6.3 | 2028692 | > PRESSURE GAUGE NG63-PN16-G1/4 | 1 |
| 6.4 | 2028291 | > BALL TAP R1/4" PN42 GIACOMINI R254DL | 1 |
| 6.5 | 2028691 | > BLOWGUN 1/4" MS 30BAR VP. | 1 |
| 7 | 4199878 | PIPE DE2 11/2''-2x11/4"+1x1/4x600 VP. | 1 |
| 8 | 4199879 | PIPE DE2 11/2''-2x11/4"+1x1/4+1x3/4x600 | 1 |
| 9 | | W-CTRL-SCE-B-2x0,55-1,5KW-T4-FM-ND1 | 1 |
| Note: TO / BIS / JUSQU'AU 18/05/2014 | | | |
| 9 | 2541913 | W-CTRL-SCE-B-2x10A-T34-FM-ND1-AVC-PKG | 1 |
| Note: FROM / AB / À PARTIR DU 19/05/2014 | | | |
| 10 | 4197079 | PLUG G1/4"x10 AISI304 KIT | 1 |
| 11 | 2032654 | PLUG R3/4" MS VIEGA 1751 | 1 |
| 20 | 2521150 | ASSEMBLY WMS. DE-EB. +VP | 1 |
| 20.1 | 2028652 | > PRESSURE SWITCH PS3-ASR 1/(1,3) VP. | 1 |
| 20.2 | 2130983 | > PLUG PS3-415 WITH KABEL 1,5M 2NO VP. | 1 |
| 20.4 | 2028290 | > CROSSPIECE R1/4" MS-NICKEL | 1 |
| 20.5 | 2028687 | > PRESSURE GAUGE NG63 R1/4" HI.0-6BAR | 1 |
| 20.6 | 2054268 | > DUAL NIPPLE G1/4" x G1/4" MS VP. | 1 |
| 20.7 | 2028691 | > BLOWGUN 1/4" MS 30BAR VP. | 1 |
| 20.8 | 2028291 | > BALL TAP R1/4" PN42 GIACOMINI R254DL | 1 |

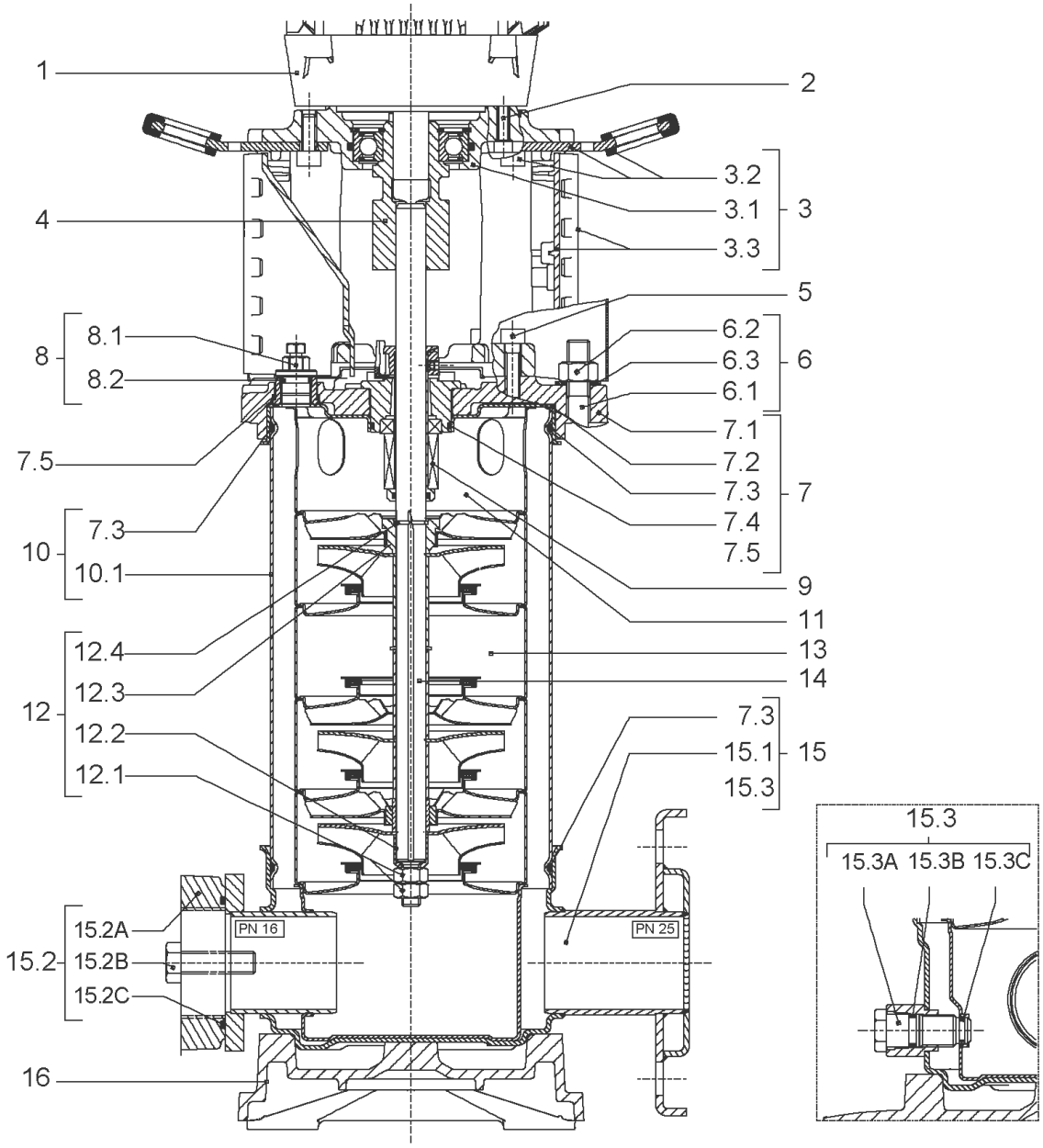
1
2
3.2
3.1
3
3.3
4
5
8.1
8
8.2
6.2
6.3
6
6.1
7.1
7.5
7.2
7.3
7
7.4
7.3
10
7.5
10.1
9
11
12.4
13
12.3
14
12
12.2
7.3
15.1
15
12.1
15.3
15.3
15.3A 15.3B 15.3C
15.2A
PN 16
PN 25
15.2
15.2B
15.2C
16

| Item | Article no. | Description | Quantity |
|---|---|---|---|
| 1 | | DRIVE HELIX-VE404-IE2-WE KIT | 1 |
| Note: MOTOR BRAND WILO ELEC | | | |
| 1 | | DRIVE HELIX-VE404-IE4-WE KIT | 1 |
| Note: MOTOR BRAND WILO ELEC | | | |
| 2 | 4159702 | SCREW M6X30 (4 PIECES) | 1 |
| 3 | 4172790 | EQUIPED LANTERN NEXIS FT 100 KIT | 1 |
| 3.1 | | > M+5_6_LANTERN_ONE-PIECE_FT100_CATA | 1 |
| 3.2 | 2127604 | > EYELET CPL.FT HELIX(2 PIECES) | 1 |
| 3.3 | 4159692 | > COUPLING PROTECTOR FT HELIX KIT | 1 |
| 4 | 4178578 | COUPLING D.12XD.19 FT100 KIT | 1 |
| 5 | 4159707 | SCREW M8X30 (4 PIECES) | 1 |
| 6 | 2018368 | STUD BOLT M12X289 KIT | 1 |
| 6.1 | | > TIE BOLT M12-289x18x30-1.4057 | 1 |
| 6.2 | 2094647 | > NUT M12 M12 ISO4032 VP. | 1 |
| 6.3 | 2123557 | > WASHER CS-12.4-24-1.6-NFE25 (4 PIECES) | 1 |
| 7 | 4210143 | STATIONARY RING HOLDER HELIX 6" EPDM | 1 |
| 7.2 | 2127607 | > STATIONARY RING HOLDER 6" HELIX 1.4301 V | 1 |
| 7.3 | 4176513 | > O-RING FOR PUMP JACKET VP. | 1 |
| 7.4 | 2127603 | > O-RING ID.37,6x2,4 EPDM VP. | 1 |
| 7.5 | 2127602 | > O-RING ID.21,35x2 EPDM VP. | 1 |
| 8 | 4159686 | FILING/PURGING PLUG HELIX EPDM KIT | 1 |
| 9 | 4178564 | SEAL-KIT-HELIX2-4 O/E KIT | 1 |
| 10 | 2127574 | HOUSING PIPE D.152x160 1.4301 KIT | 1 |
| 7.3 | 4176513 | > O-RING FOR PUMP JACKET VP. | 1 |
| 10.1 | | > HOUSING-PIPE Ø152-M+1601/02-304 | 1 |
| 11 | 4178566 | CENTERING STAGE-RETURN HELIX4 1.4307 VP | 1 |
| 12 | 4178568 | SHAFT EQUIPMENT HELIX V2/V4 KIT | 1 |
| 12.1 | | > NUT-H-M8-STAINLESS-STEEL A4-70 | 2 |
| 12.2 | | > SHAFT END WASHER Ø8/Ø12 316L | 1 |
| 12.3 | | > STOP COLLAR OF IMPELLER M+2/4 SINGLEBLOC | 1 |
| 12.4 | | > STOP-RUSH-1/2-D12xd2-M+316 | 2 |
| 13 | | HYDRAULIC HELIX V 404 1.4307 | 1 |
| 14 | 4178576 | SHAFT D.12X283 1.4301 VP. | 1 |
| 15 | 4174079 | PUMP HOUSING HELIX DN32 PN16 1.4301 KIT | 1 |

| Item | Article no. | Description | Quantity |
|---|---|---|---|
| 7.3 | 4176513 | > O-RING FOR PUMP JACKET VP. | 1 |
| 15.1 | | > BLASTING PPE HOUSING V-PN16-DN32-5"-304 | 1 |
| 15.2 | 4217889 | > COUNTER FLANGE-G1"-PN16-GJL KIT | 1 |
| 15.3 | 4171321 | > PRIMING/DRAIN PLUG EPDM HELIX KIT | 1 |
| 16 | 4177964 | BASEPLATE HELIX V2/4/6 PN16 VP. | 1 |

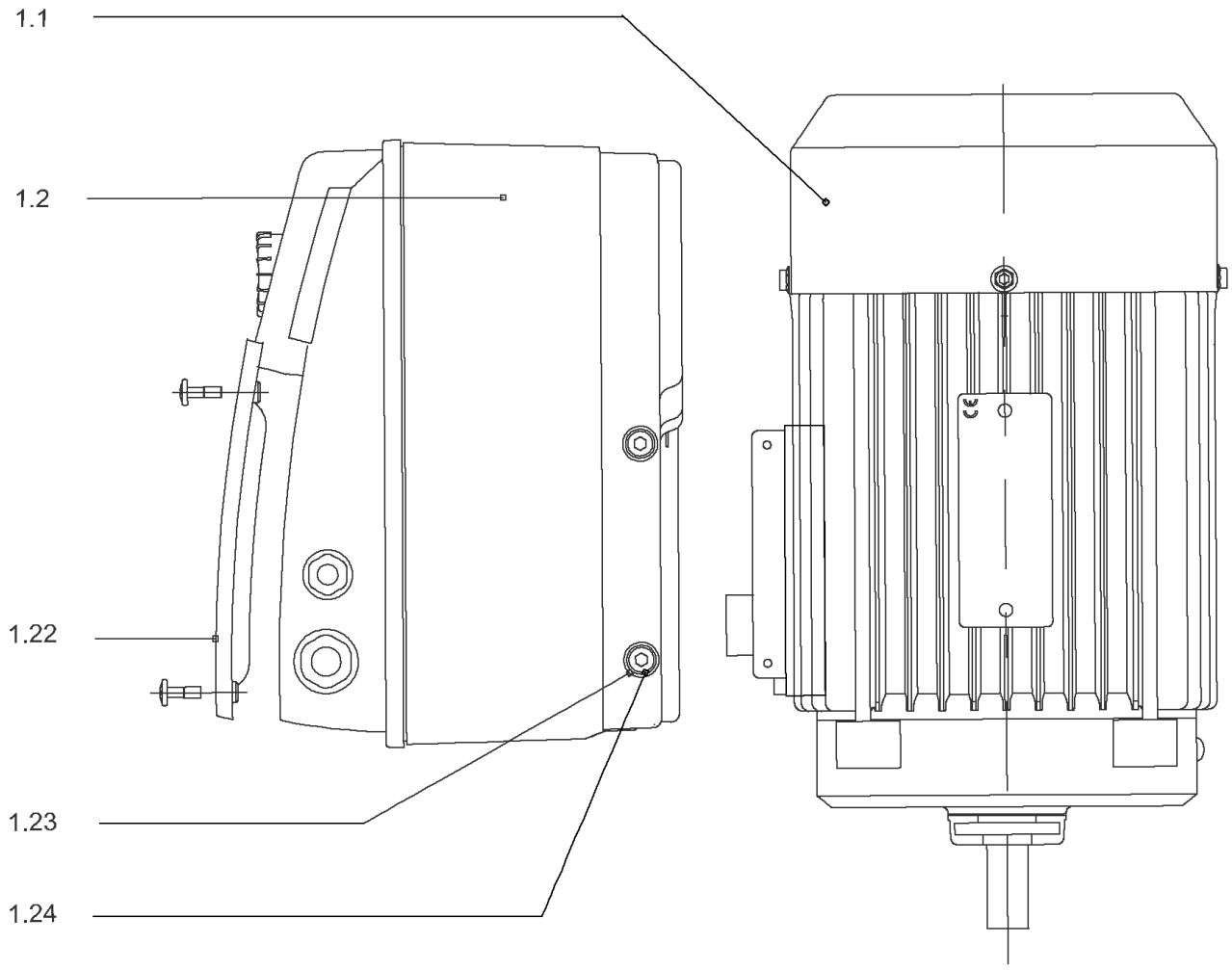
1.1
1.2
1.22
1.23
1.24

## DRIVE HELIX-VE404-IE2-WE KIT

| Item | Article no. | Description | Quantity |
|---|---|---|---|
| 1.1 | | MOTOR 0,75/2/80 3~ 380V 60HZ IE2 WE VP. | 1 |
| Note: no longer available/nicht mehrlieferbar/n'est plus disponible | | | |
| | | SPARE PARTS MOTOR:ON REQUEST | 1 |
| 1.2 | 4190192 | MODULE HELIX-VE404-IE2-WE KIT | 1 |
| 1.22 | 2054372 | > MODULE COVER TL1,TL2+GASKET KIT | 1 |
| 1.23 | 4215716 | > SCREW M5X16 DIN912 8.8 A2A (4pieces) VP. | 1 |
| 1.24 | 2057978 | > RONDELLE A5,3 DIN6797 FST ZN (4 PIECES) | 1 |

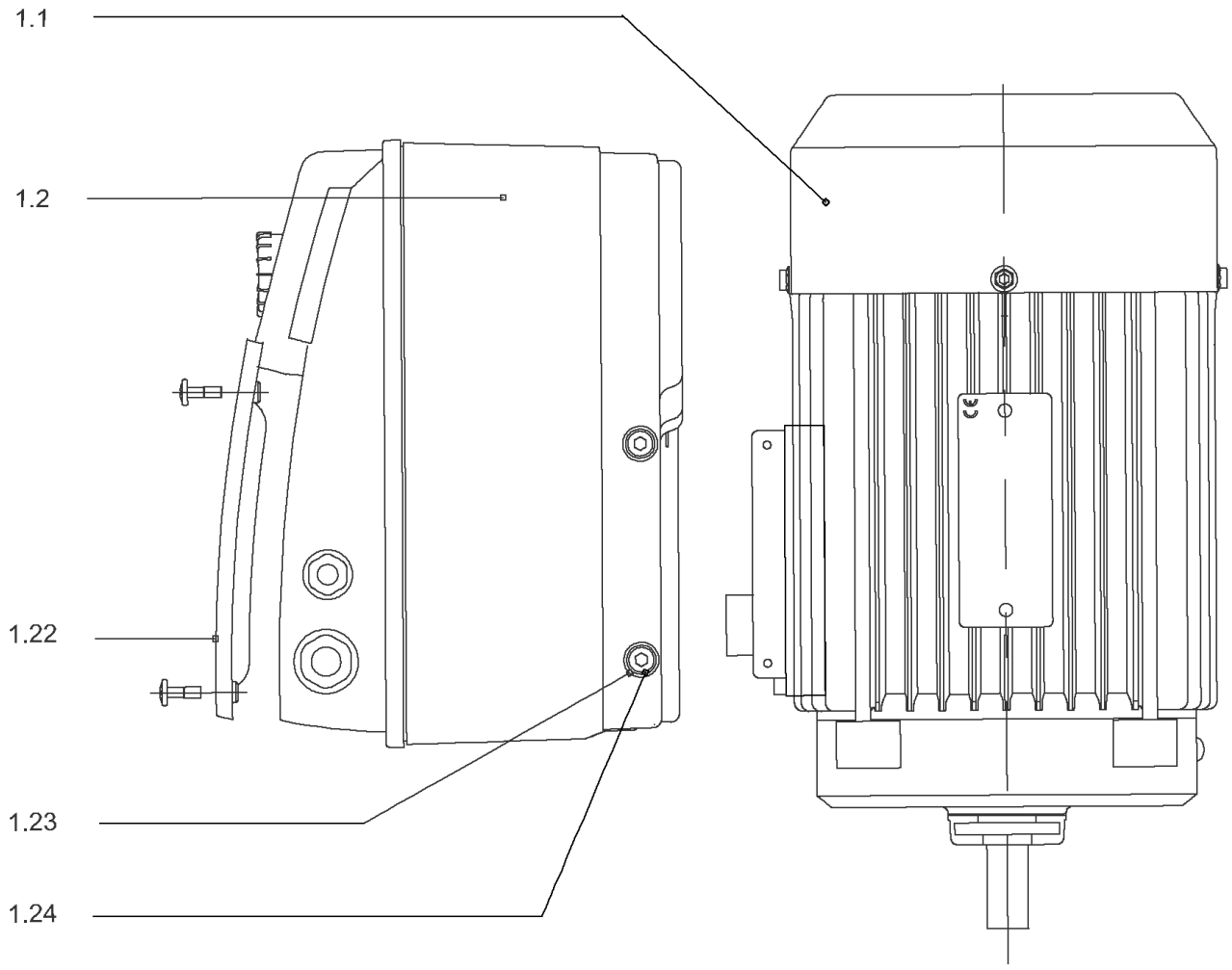
1.1
1.2
1.22
1.23
1.24

## DRIVE HELIX-VE404-IE4-WE KIT

| Item | Article no. | Description | Quantity |
|---|---|---|---|
| 1.1 | 4207914 | MOTOR 0.75/2/80 3~ 380V 60HZ IE4 WE VP. | 1 |
| | | SPARE PARTS MOTOR:ON REQUEST | 1 |
| 1.2 | 4209322 | MODULE HELIX-VE404-IE4-WE KIT | 1 |
| 1.22 | 2054372 | > MODULE COVER TL1,TL2+GASKET KIT | 1 |
| 1.23 | 4215716 | > SCREW M5X16 DIN912 8.8 A2A (4pieces) VP. | 1 |
| 1.24 | 2057978 | > RONDELLE A5,3 DIN6797 FST ZN (4 PIECES) | 1 |

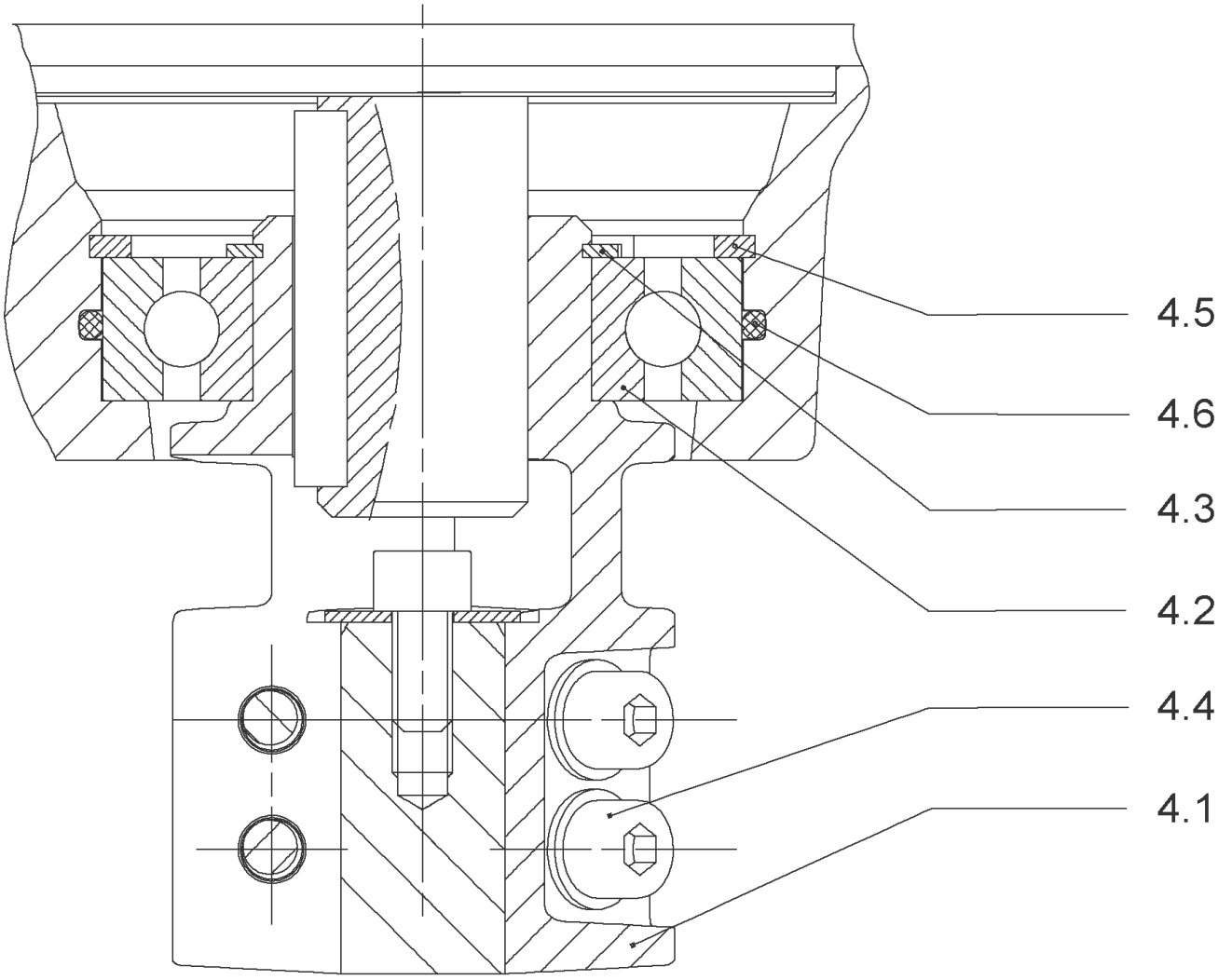
4.5
4.6
4.3
4.2
4.4
4.1

## COUPLING D.12XD.19 FT100 KIT (4178578)

| Item | Article no. | Description | Quantity |
|---|---|---|---|
| 4.1 | | COUPLING-M+ Ø12XØ19-FT100-MACHINED | 1 |
| 4.3 | 4234249 | CIRCLIP-FOR-SHAFT-D30x1.5 VP. | 1 |
| 4.2 | 2130977 | BALL BEARING 6206/ZZ-C3(HT)VP. | 1 |
| 4.4 | 4212716 | SCREW M6X20 KIT (4PIECES) | 1 |
| 4.5 | 4234250 | CIRCLIP-D62x2 VP. | 1 |
| 4.6 | 4234245 | O-RING 63X3 VP. | 1 |
| | | CONTACT-WASHER-6ETR-6,1x12,2x1,8-STEEL | 4 |

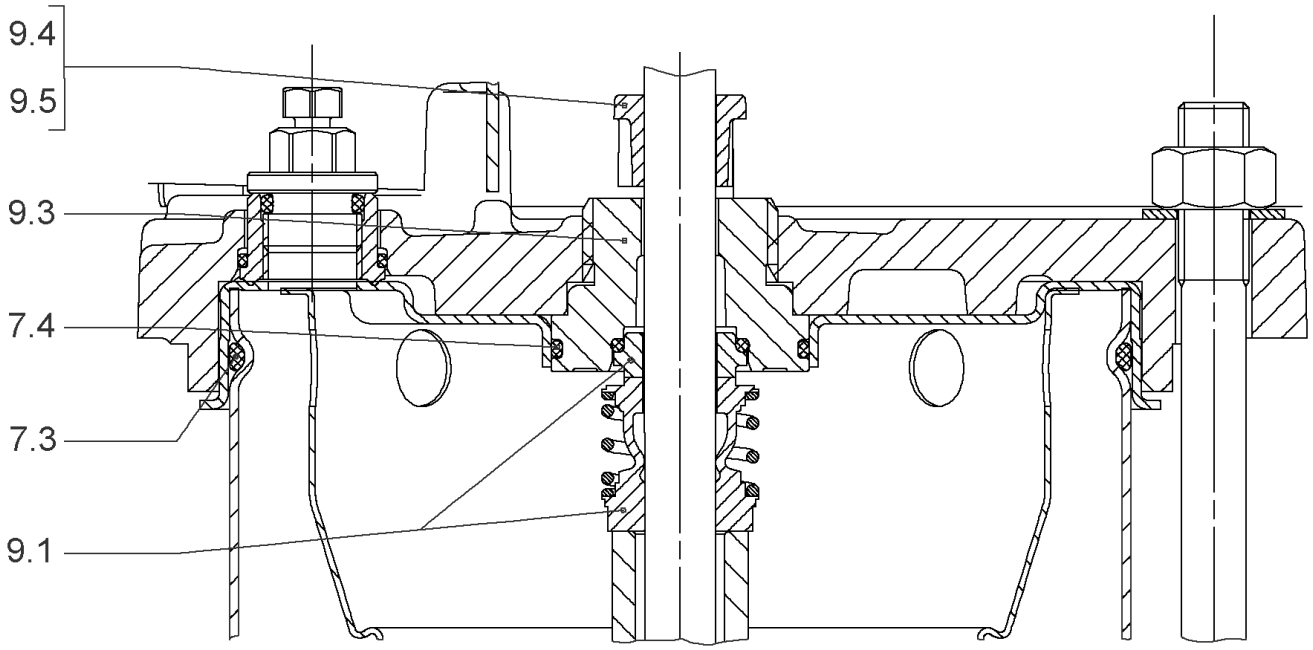
9.4
9.5
9.3
7.4
7.3
9.1

## SEAL-KIT-HELIX2-4 O/E KIT (4178564)

| Item | Article no. | Description | Quantity |
|---|---|---|---|
| 7.3 | 4176513 | O-RING FOR PUMP JACKET VP. | 1 |
| 7.4 | 2127603 | O-RING ID.37,6x2,4 EPDM VP. | 1 |
| 9.1 | 4178563 | M.SEAL.HELIX2-4 O/E VP. | 1 |
| 9.3 | 4178561 | RING HOLDER Ø22 1.4301 VP. | 1 |
| 9.5 | 4178562 | DRIVE RING D.22/12.2X10 MACH.VP. | 1 |
| 9.4 | 4176520 | SCREW CH M5x5 A4-70 ( 3PIECES ) | 1 |

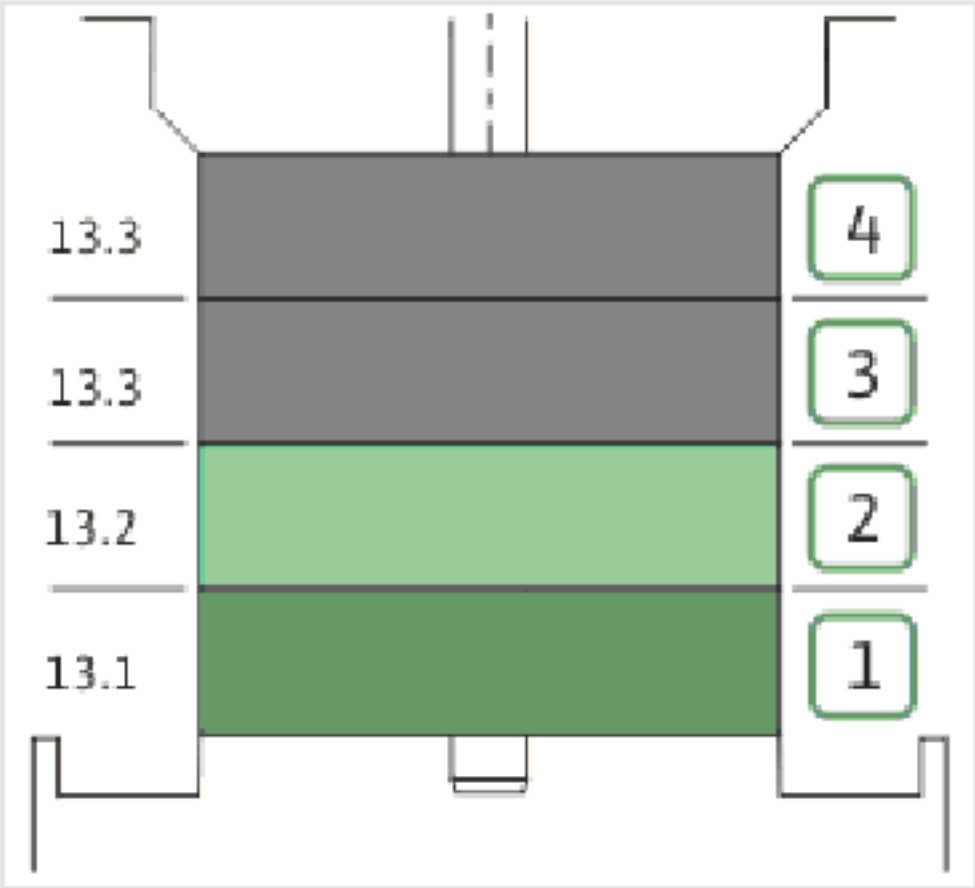
13.3
13.3
13.2
13.1
4
3
2
1

| Item | Article no. | Description | Quantity |
|---|---|---|---|
| 13.1 | 4178570 | STAGE HELIX 4 1.4301 KIT | 1 |
| | | > MACH.STG-CASING-WOGV-WNR-M+2-4-304 | 1 |
| | | > IMPELLER-M+4-304 | 1 |
| 13.2 | 4178569 | STAGE BEARING HELIX 4 1.4301 KIT | 1 |
| | | > MACH.BEARING-STG-CASING-WNR-M+4-304 | 1 |
| | | > IMPELLER-M+4-304 | 1 |
| | | > SHAFT SLEEVE SPACER Ø15,35x10,305-304 | 1 |
| | | > SHAFT-SLEEVE-D12xD16x14-CW | 1 |
| 13.3 | 4178574 | INTER STAGE HELIX4 1.4301< 15 stages KIT | 1 |
| | | > MACH.STD-STG-CASING-WGV+NR-M+4-304 | 1 |
| | | > IMPELLER-M+4-304 | 1 |
| | | > IMPELLER SPACER Ø12,05X14,85-L24,285-304 | 1 |

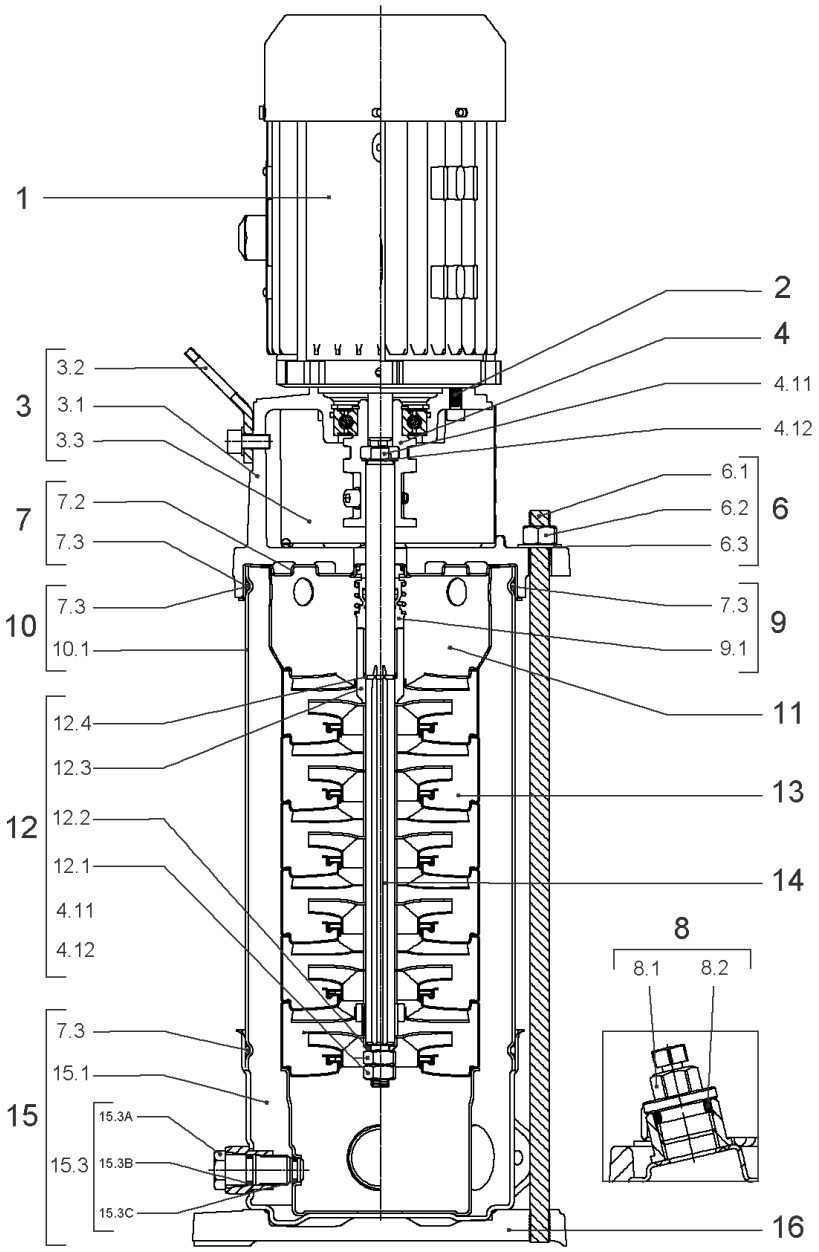
1
2
4
4.11
4.12
3
3.2
3.1
3.3
7
7.2
7.3
6
6.1
6.2
6.3
10
7.3
10.1
9
7.3
9.1
11
12
12.4
12.3
12.2
12.1
4.11
4.12
13
14
8
8.1
8.2
15
7.3
15.1
15.3
15.3A
15.3B
15.3C
16

## HELIX VE404-1/16/E/S (4201569)

| Item | Article no. | Description | Quantity |
|---|---|---|---|
| 1 | | DRIVE HELIX-VE404-IE4-WE KIT | 1 |
| Note: MOTOR BRAND WILO ELEC | | | |
| | | SPARE PARTS MOTOR:ON REQUEST | 1 |
| 2 | 4212716 | SCREW M6X20 KIT (4PIECES) | 1 |
| 3 | 4213752 | LANTERN FT100 HELIX KIT | 1 |
| 3.1 | | > LANT-MOT-VMI-ReDTC6"-FT100-MACHINED+CATA | 1 |
| 3.2 | 4184852 | > EYELET CPL.FT HELIX (2 PIECES) | 1 |
| 3.3 | 4213713 | > COUPLING PROTECTOR FT85/100 HELIX KIT | 1 |
| 4 | 4178578 | COUPLING D.12XD.19 FT100 KIT | 1 |
| 6 | 2018368 | STUD BOLT M12X289 KIT | 1 |
| 6.1 | | > TIE BOLT M12-289x18x30-1.4057 | 1 |
| 6.2 | 2094647 | > NUT M12 M12 ISO4032 VP. | 1 |
| 6.3 | 2123557 | > WASHER CS-12.4-24-1.6-NFE25 (4 PIECES) | 1 |
| 7 | 4212722 | STATIONARY RING HOLDER HELIX D23 ReDTC | 1 |
| 7.2 | 4212720 | > STATIONARY RING HOLDER HELIX D23 VP. | 1 |
| 7.3 | 4176513 | > O-RING FOR PUMP JACKET VP. | 1 |
| 8 | 4212724 | FILING/PURGING PLUG HELIX ReDTC KIT | 1 |
| 8.1 | | > FILLING PLUG MVI6"-304 | 1 |
| 8.2 | 4177800 | > O-RING EPDM PLUG HELIX VP. | 1 |
| 9 | 4212726 | MECH.SEAL HELIX V2/4 O/E ReDTC KIT | 1 |
| 9.1 | 4178563 | > M.SEAL.HELIX2-4 O/E VP. | 1 |
| 7.3 | 4176513 | > O-RING FOR PUMP JACKET VP. | 1 |
| 10 | 2127574 | HOUSING PIPE D.152x160 1.4301 KIT | 1 |
| 7.3 | 4176513 | > O-RING FOR PUMP JACKET VP. | 1 |
| 10.1 | | > HOUSING-PIPE Ø152-M+1601/02-304 | 1 |
| 11 | 4178566 | CENTERING STAGE-RETURN HELIX4 1.4307 VP | 1 |
| 12 | 4212729 | SHAFT EQUIPMENT HELIX V2/4 ReDTC KIT | 1 |
| 12.1 | | > NUT-H-M8-STAINLESS-STEEL A4-70 | 1 |
| 12.2 | | > SHAFT END WASHER Ø8/Ø12 316L | 1 |
| 12.3 | | > 1/2-SNAP-RING-2/4M3-316L | 1 |
| 12.4 | | > STOP-RUSH-1/2-D12xd2-M+316 | 1 |
| 4.11 | | > SCREW CHC-M6X14-8.8-ISO4762-GEOMET500A | 1 |
| 4.12 | | > WASHER D.24 L6U ZINK | 1 |
| 13 | | HYDRAULIC HELIX V 404 1.4307 | 1 |

| Item | Article no. | Description | Quantity |
|---|---|---|---|
| 14 | 4213744 | SHAFT D.12X231 HELIX 1.4057 VP. | 1 |
| 15 | 4174079 | PUMP HOUSING HELIX DN32 PN16 1.4301 KIT | 1 |
| 7.3 | 4176513 | > O-RING FOR PUMP JACKET VP. | 1 |
| 15.1 | | > BLASTING PPE HOUSING V-PN16-DN32-5"-304 | 1 |
| 15.2 | 4217889 | > COUNTER FLANGE-G1"-PN16-GJL KIT | 1 |
| 15.3 | 4171321 | > PRIMING/DRAIN PLUG EPDM HELIX KIT | 1 |
| 16 | 4177964 | BASEPLATE HELIX V2/4/6 PN16 VP. | 1 |

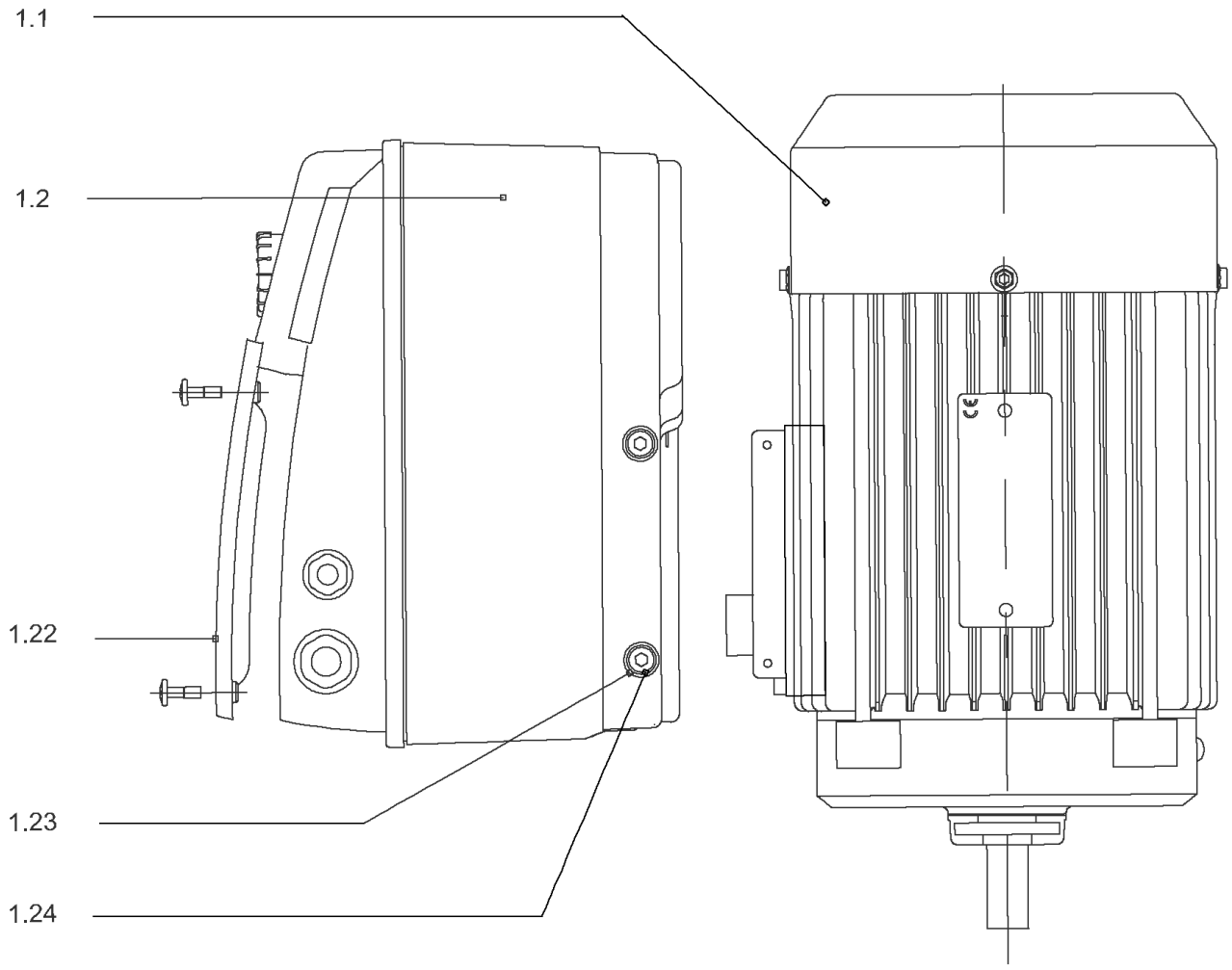
1.1
1.2
1.22
1.23
1.24

## DRIVE HELIX-VE404-IE4-WE KIT

| Item | Article no. | Description | Quantity |
|---|---|---|---|
| 1.1 | 4207914 | MOTOR 0.75/2/80 3~ 380V 60HZ IE4 WE VP. | 1 |
| | | SPARE PARTS MOTOR:ON REQUEST | 1 |
| 1.2 | 4209322 | MODULE HELIX-VE404-IE4-WE KIT | 1 |
| 1.22 | 2054372 | > MODULE COVER TL1,TL2+GASKET KIT | 1 |
| 1.23 | 4215716 | > SCREW M5X16 DIN912 8.8 A2A (4pieces) VP. | 1 |
| 1.24 | 2057978 | > RONDELLE A5,3 DIN6797 FST ZN (4 PIECES) | 1 |

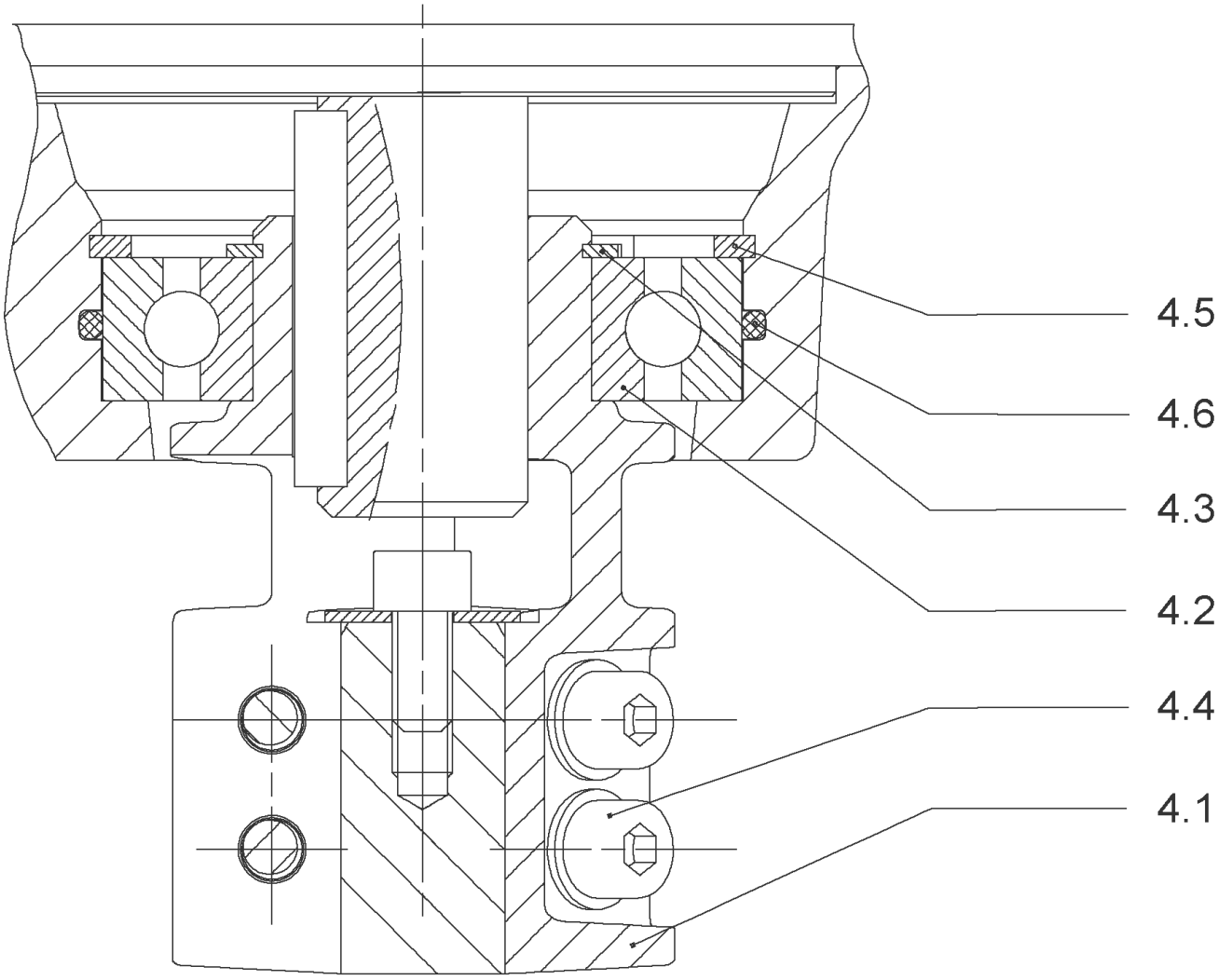
4.5
4.6
4.3
4.2
4.4
4.1

## COUPLING D.12XD.19 FT100 KIT (4178578)

| Item | Article no. | Description | Quantity |
|---|---|---|---|
| 4.1 | | COUPLING-M+ Ø12XØ19-FT100-MACHINED | 1 |
| 4.3 | 4234249 | CIRCLIP-FOR-SHAFT-D30x1.5 VP. | 1 |
| 4.2 | 2130977 | BALL BEARING 6206/ZZ-C3(HT)VP. | 1 |
| 4.4 | 4212716 | SCREW M6X20 KIT (4PIECES) | 1 |
| 4.5 | 4234250 | CIRCLIP-D62x2 VP. | 1 |
| 4.6 | 4234245 | O-RING 63X3 VP. | 1 |
| | | CONTACT-WASHER-6ETR-6,1x12,2x1,8-STEEL | 4 |

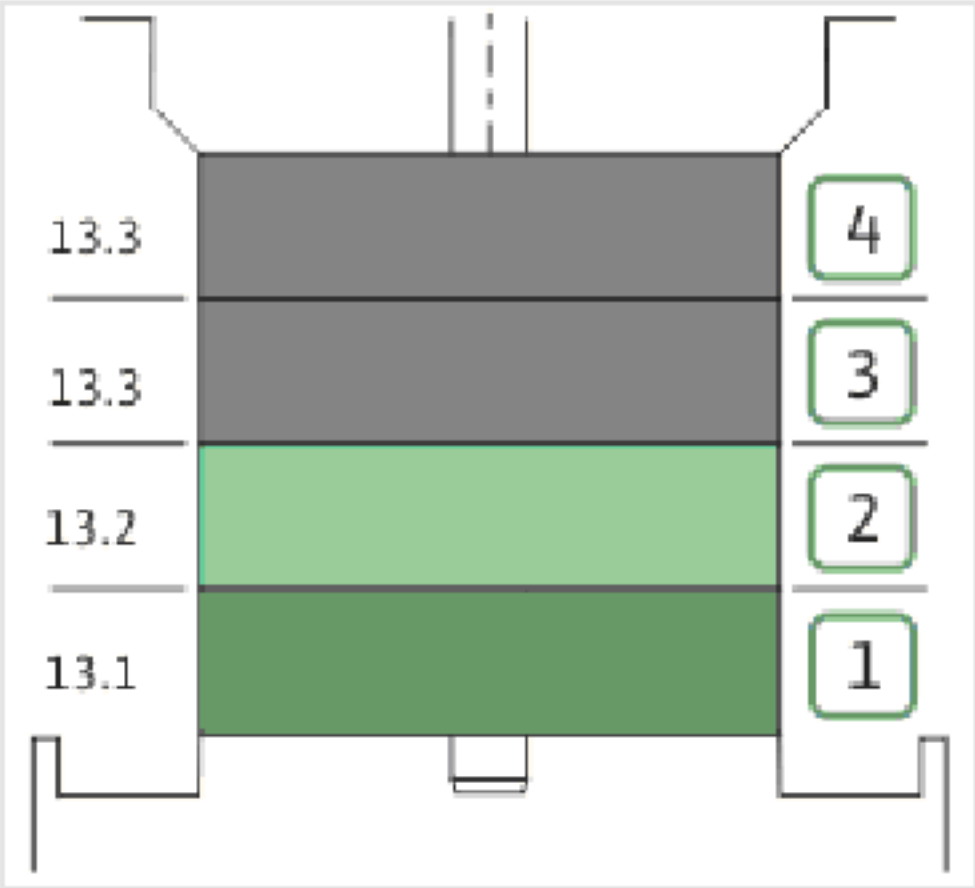
13.3
13.3
13.2
13.1
4
3
2
1

| Item | Article no. | Description | Quantity |
|---|---|---|---|
| 13.1 | 4178570 | STAGE HELIX 4 1.4301 KIT | 1 |
| | | > MACH.STG-CASING-WOGV-WNR-M+2-4-304 | 1 |
| | | > IMPELLER-M+4-304 | 1 |
| 13.2 | 4178569 | STAGE BEARING HELIX 4 1.4301 KIT | 1 |
| | | > MACH.BEARING-STG-CASING-WNR-M+4-304 | 1 |
| | | > IMPELLER-M+4-304 | 1 |
| | | > SHAFT SLEEVE SPACER Ø15,35x10,305-304 | 1 |
| | | > SHAFT-SLEEVE-D12xD16x14-CW | 1 |
| 13.3 | 4178574 | INTER STAGE HELIX4 1.4301< 15 stages KIT | 1 |
| | | > MACH.STD-STG-CASING-WGV+NR-M+4-304 | 1 |
| | | > IMPELLER-M+4-304 | 1 |
| | | > IMPELLER SPACER Ø12,05X14,85-L24,285-304 | 1 |

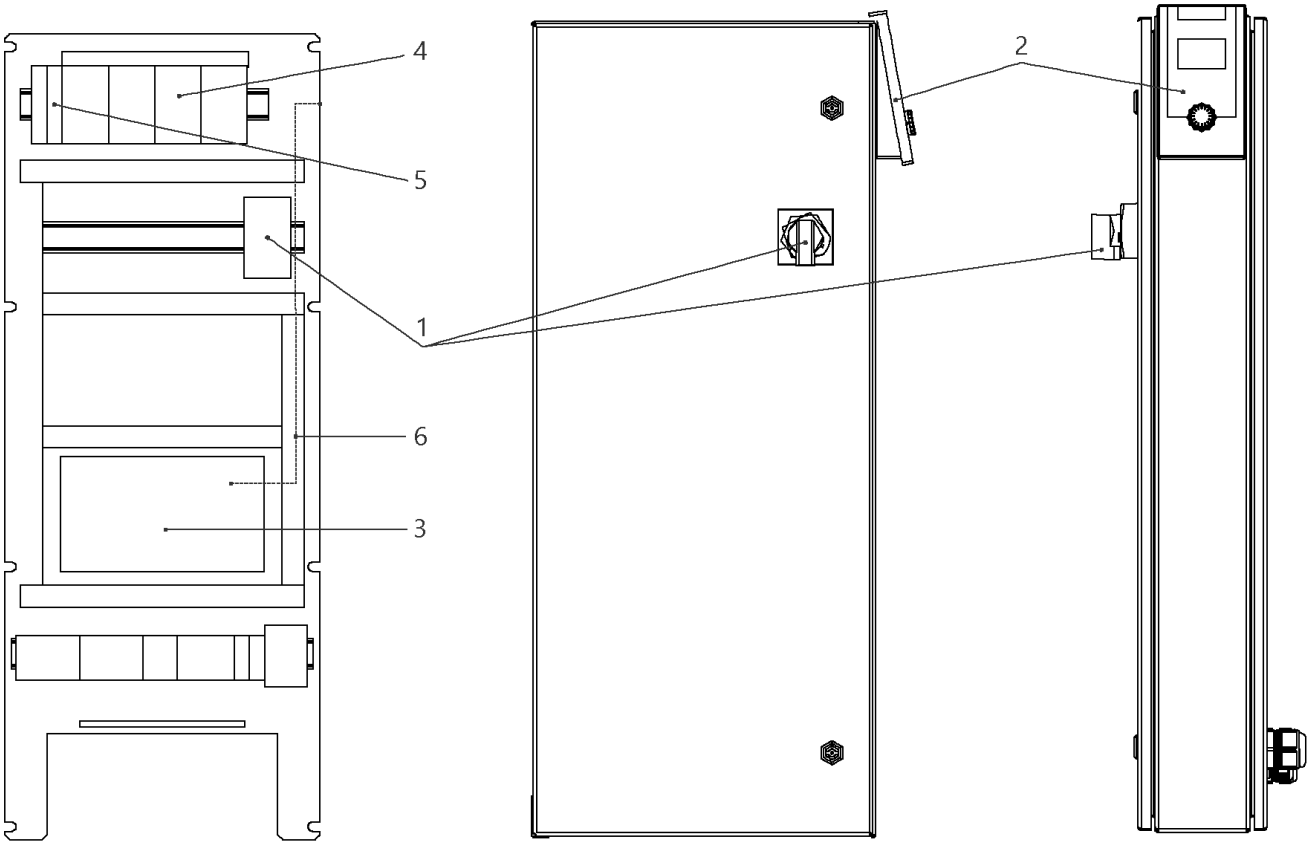
4
5
1
6
3
2

## W-CTRL-SCE-B-2x0,55-1,5KW-T4-FM-ND1

| Item | Article no. | Description | Quantity |
|---|---|---|---|
| 1 | 2104470 | MAIN SWITCH OT40F3 L250 KIT | 1 |
| 2 | 4184784 | CONTROL PANEL HMI SC KIT | 1 |
| 2 | 4185259 | ASSEMBLY DISPLAY SC PKG VP. | 1 |
| 3 | 4185257 | ASSEMBLY CPU SCe Booster VP. | 1 |
| 4 | 2051217 | AUTOM.CIRCUIT BREAKER S203 B16 TO7,5kW | 1 |
| 5 | 2046288 | CIRCUIT BREAKER S201 B16 | 1 |
| 6 | 4197081 | CABLE RJ45 CAT6 0,5M RED SC-PANEL VP. | 1 |

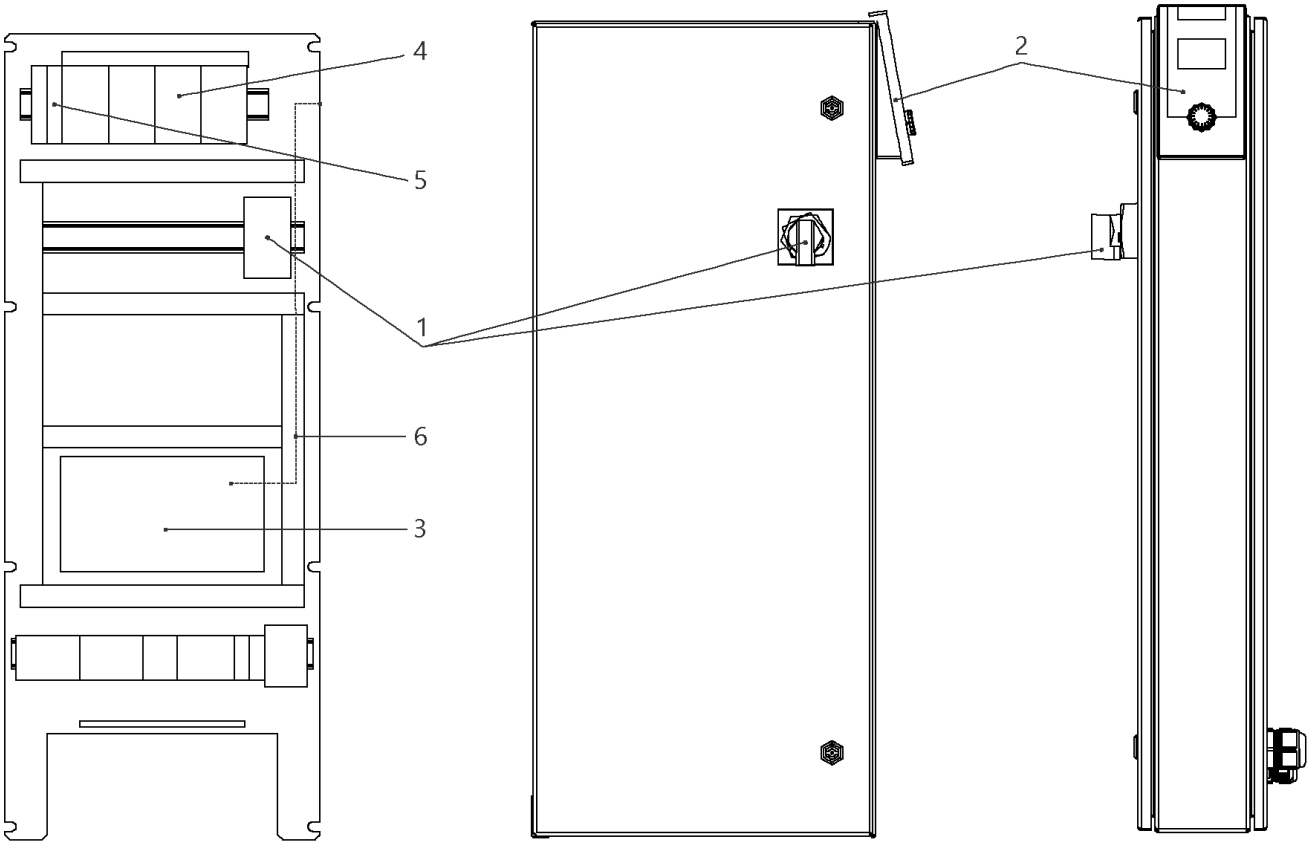
4
5
1
6
3
2

## W-CTRL-SCE-B-2x10A-T34-FM-ND1-AVC-PKG (2541913)

| Item | Article no. | Description | Quantity |
|---|---|---|---|
| 1 | 2104470 | MAIN SWITCH OT40F3 L250 KIT | 1 |
| 2 | 4184784 | CONTROL PANEL HMI SC KIT | 1 |
| 2 | 4185259 | ASSEMBLY DISPLAY SC PKG VP. | 1 |
| Note: DISPLAY ALONE / PLATINE SEULE | | | |
| 3 | 4185257 | ASSEMBLY CPU SCe Booster VP. | 1 |
| 4 | 2119861 | AUTOMATIC CIRCUIT BREAKER S203 B13 3POL. | 1 |
| 5 | 2046288 | CIRCUIT BREAKER S201 B16 | 1 |
| 6 | 4197081 | CABLE RJ45 CAT6 0,5M RED SC-PANEL VP. | 1 |

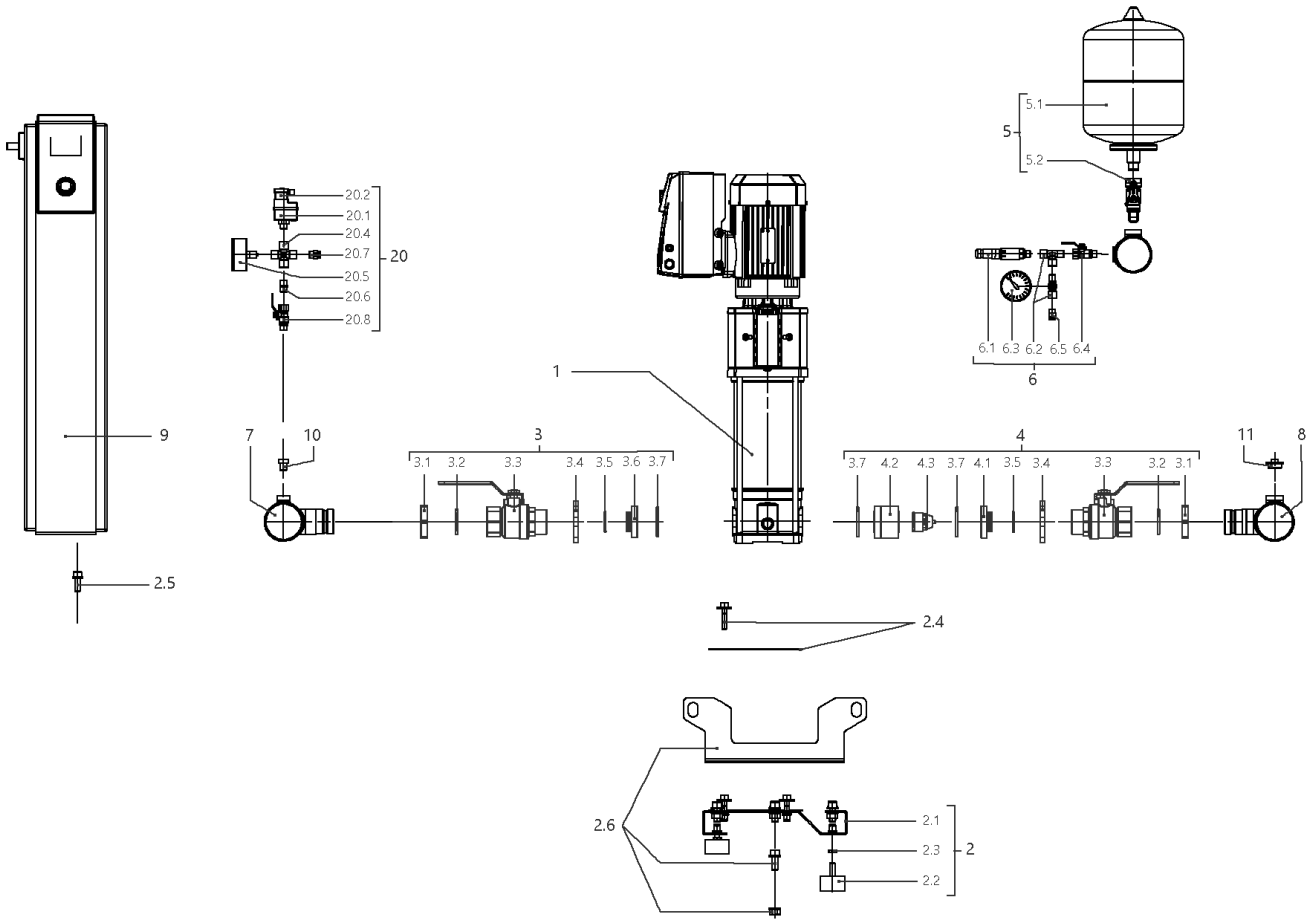
5.1
5
5.2
20.2
20.1
20.4
20.7
20
20.5
20.6
20.8
6.1 6.3 6.2 6.5 6.4
6
1
9
7
10
3
3.1 3.2 3.3 3.4 3.5 3.6 3.7
4
3.7 4.2 4.3 3.7 4.1 3.5 3.4 3.3 3.2 3.1
11
8
2.5
2.4
2.6
2.1
2.3
2
2.2

| Item | Article no. | Description | Quantity |
|---|---|---|---|
| 1 | | HELIX VE405-1/16/E/S | 1 |
| Note: TO / BIS / JUSQU'AU 31/03/2016 | | | |
| 1 | 4201571 | HELIX VE405-1/16/E/S | 1 |
| Note: FROM / AB / À PARTIR DU 01/04/2016 | | | |
| 2 | 4200135 | BASE PLATE DE2 850x420 KIT | 1 |
| Note: TO / BIS / JUSQU'AU 28/02/2013 | | | |
| 2.1 | | > BASEPLATE_2x4/6/10/16V_E300_BOX_150 | 1 |
| 2.2 | 2028654 | > VIBRATION DAMPER D.50X30 M10X28 | 1 |
| 2.3 | 2028281 | > NUT M10 DIN936 (ISO4035) 17H VZ | 1 |
| 2.4 | 4199875 | > HOLDER PUMP Siboost Helix V2/4 KIT | 1 |
| 2.5 | 4197084 | > HOLDER SWITCHBOX WILO Smart Control KIT | 1 |
| 2.6 | 4197117 | > LIFTING Siboost HELIX SC KIT | 1 |
| 2 | 4199874 | BASE PLATE DE2 850x300 M10 KIT | 1 |
| Note: FROM / AB / À PARTIR DU 01/03/2013 | | | |
| 2.1 | | > BASEPLATE_2x4/6/10V_E300_850x300_BOX_150 | 1 |
| 2.2 | 2028654 | > VIBRATION DAMPER D.50X30 M10X28 | 1 |
| 2.3 | 2028281 | > NUT M10 DIN936 (ISO4035) 17H VZ | 1 |
| 2.4 | 4199875 | > HOLDER PUMP Siboost Helix V2/4 KIT | 1 |
| 2.5 | 4197084 | > HOLDER SWITCHBOX WILO Smart Control KIT | 1 |
| 2.6 | 4197085 | > LIFTING Siboost HELIX SC KIT | 1 |
| 3 | 4199876 | SUCTION SIDE Siboost Helix V2/4/6 KIT | 1 |
| 3.1 | 2032610 | > NUT G11/4 MS VP. | 1 |
| 3.2 | 2032611 | > O-RING ID.36,09X3,53N DIN3771 E7502 | 1 |
| 3.3 | 2507646 | > BALL VALVE G11/4"M-F-W.HANDLE 1/4-TURN | 1 |
| 3.4 | 2032613 | > SCREWED FLANGE G1 1/4" LK-75 ST37VZ | 1 |
| 3.5 | 2032614 | > O-RING ID.29,82X2,62N DIN3771 E7502 | 1 |
| 3.6 | 2032615 | > SPACER F.I/A KUH.DN32 CUZN | 1 |
| 3.7 | 2032616 | > O-RING ID.44X3,53N DIN3771 E7502 | 1 |
| 4 | 4199877 | DELIVERY SIDE Siboost Helix V2/4/6 KIT | 1 |
| 3.1 | 2032610 | > NUT G11/4 MS VP. | 1 |
| 3.2 | 2032611 | > O-RING ID.36,09X3,53N DIN3771 E7502 | 1 |
| 3.3 | 2507646 | > BALL VALVE G11/4"M-F-W.HANDLE 1/4-TURN | 1 |
| 3.4 | 2032613 | > SCREWED FLANGE G1 1/4" LK-75 ST37VZ | 1 |
| 3.5 | 2032614 | > O-RING ID.29,82X2,62N DIN3771 E7502 | 1 |

| Item | Article no. | Description | Quantity |
|---|---|---|---|
| 4.1 | 2058116 | > SPACER F.I/A KUH.DN32 CUZN | 1 |
| 3.7 | 2032616 | > O-RING ID.44X3,53N DIN3771 E7502 | 1 |
| 4.2 | 2058115 | > HOUSING RFV(RV-IN) DN32 SGS/DRS | 1 |
| 4.3 | 2027870 | > NON-RETURN-DEVICE INSERT DN32(MTR) | 1 |
| 5 | 2032642 | DIAPHREM TANK 8L/PN16 DIN4807/T5 KIT | 1 |
| 5.1 | 2045914 | > DIAPHREM TANK 8L TYP-DD 16BAR | 1 |
| 5.2 | 2027853 | > FLOW FITTING G3/4 FOR DIAPHRAGM VES. | 1 |
| 6 | 4197076 | PRESSURE SENSOR/ GAUGE 0-16BAR KIT | 1 |
| 6.1 | 2085909 | > PRESS.SENSOR 1/4" 0-16BAR 4-20MA VP. | 1 |
| 6.2 | 4197077 | > T-PIECE 1/4" VP. | 1 |
| 6.3 | 2028692 | > PRESSURE GAUGE NG63-PN16-G1/4 | 1 |
| 6.4 | 2028291 | > BALL TAP R1/4" PN42 GIACOMINI R254DL | 1 |
| 6.5 | 2028691 | > BLOWGUN 1/4" MS 30BAR VP. | 1 |
| 7 | 4199878 | PIPE DE2 11/2''-2x11/4"+1x1/4x600 VP. | 1 |
| 8 | 4199879 | PIPE DE2 11/2''-2x11/4"+1x1/4+1x3/4x600 | 1 |
| 9 | | W-CTRL-SCE-B-2x1,1KW-T4-FM-ND2 | 1 |
| Note: TO / BIS / JUSQU'AU 28/02/2013 | | | |
| 9 | | W-CTRL-SCE-B-2x0,55-1,5KW-T4-FM-ND1 | 1 |
| Note: FROM / AB / À PARTIR DU 01/03/2013 - TO / BIS / JUSQU'AU 18/05/2014 | | | |
| 9 | 2541913 | W-CTRL-SCE-B-2x10A-T34-FM-ND1-AVC-PKG | 1 |
| Note: FROM / AB / À PARTIR DU 19/05/2014 | | | |
| 10 | 4197079 | PLUG G1/4"x10 AISI304 KIT | 1 |
| 11 | 2032654 | PLUG R3/4" MS VIEGA 1751 | 1 |
| 20 | 2521150 | ASSEMBLY WMS. DE-EB. +VP | 1 |
| 20.1 | 2028652 | > PRESSURE SWITCH PS3-ASR 1/(1,3) VP. | 1 |
| 20.2 | 2130983 | > PLUG PS3-415 WITH KABEL 1,5M 2NO VP. | 1 |
| 20.4 | 2028290 | > CROSSPIECE R1/4" MS-NICKEL | 1 |
| 20.5 | 2028687 | > PRESSURE GAUGE NG63 R1/4" HI.0-6BAR | 1 |
| 20.6 | 2054268 | > DUAL NIPPLE G1/4" x G1/4" MS VP. | 1 |
| 20.7 | 2028691 | > BLOWGUN 1/4" MS 30BAR VP. | 1 |
| 20.8 | 2028291 | > BALL TAP R1/4" PN42 GIACOMINI R254DL | 1 |

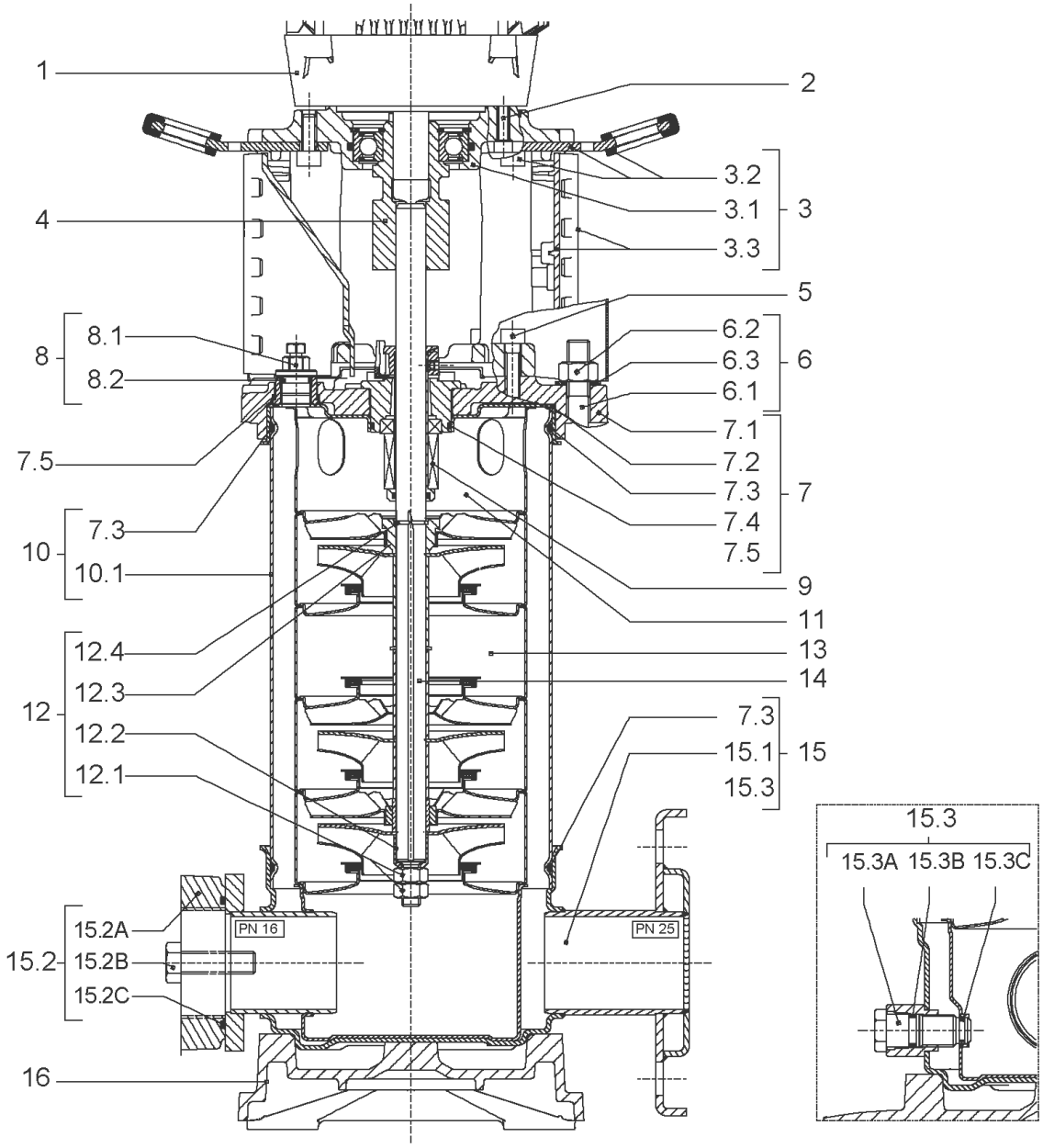
1
2
3.2
3.1
3
3.3
4
5
8.1
8
8.2
6.2
6.3
6
6.1
7.1
7.5
7.2
7.3
7
7.4
7.3
10
7.5
10.1
9
11
12.4
13
12.3
14
12
12.2
7.3
15.1
15
12.1
15.3
15.3
15.3A 15.3B 15.3C
15.2A
PN 16
PN 25
15.2
15.2B
15.2C
16

| Item | Article no. | Description | Quantity |
|---|---|---|---|
| 1 | | DRIVE HELIX-VE405-IE2-WE KIT | 1 |
| Note: MOTOR BRAND WILO ELEC | | | |
| 1 | | DRIVE HELIX-VE405-IE4-WE KIT | 1 |
| Note: MOTOR BRAND WILO ELEC | | | |
| 2 | 4159702 | SCREW M6X30 (4 PIECES) | 1 |
| 3 | 4172790 | EQUIPED LANTERN NEXIS FT 100 KIT | 1 |
| 3.1 | | > M+5_6_LANTERN_ONE-PIECE_FT100_CATA | 1 |
| 3.2 | 2127604 | > EYELET CPL.FT HELIX(2 PIECES) | 1 |
| 3.3 | 4159692 | > COUPLING PROTECTOR FT HELIX KIT | 1 |
| 4 | 4178578 | COUPLING D.12XD.19 FT100 KIT | 1 |
| 5 | 4159707 | SCREW M8X30 (4 PIECES) | 1 |
| 6 | 4178579 | STUD BOLT M12X317 KIT | 1 |
| 6.1 | | > TIE BOLT M12-317x18x30-1.4057 | 1 |
| 6.2 | 2094647 | > NUT M12 M12 ISO4032 VP. | 1 |
| 6.3 | 2123557 | > WASHER CS-12.4-24-1.6-NFE25 (4 PIECES) | 1 |
| 7 | 4210143 | STATIONARY RING HOLDER HELIX 6" EPDM | 1 |
| 7.2 | 2127607 | > STATIONARY RING HOLDER 6" HELIX 1.4301 V | 1 |
| 7.3 | 4176513 | > O-RING FOR PUMP JACKET VP. | 1 |
| 7.4 | 2127603 | > O-RING ID.37,6x2,4 EPDM VP. | 1 |
| 7.5 | 2127602 | > O-RING ID.21,35x2 EPDM VP. | 1 |
| 8 | 4159686 | FILING/PURGING PLUG HELIX EPDM KIT | 1 |
| 9 | 4178564 | SEAL-KIT-HELIX2-4 O/E KIT | 1 |
| 10 | 4178580 | HOUSING PIPE D.152X184 1.4301 KIT | 1 |
| 7.3 | 4176513 | > O-RING FOR PUMP JACKET VP. | 1 |
| 10.1 | | > HOUSING-PIPE Ø152-M+205/405-304 | 1 |
| 11 | 4178566 | CENTERING STAGE-RETURN HELIX4 1.4307 VP | 1 |
| 12 | 4178568 | SHAFT EQUIPMENT HELIX V2/V4 KIT | 1 |
| 12.1 | | > NUT-H-M8-STAINLESS-STEEL A4-70 | 2 |
| 12.2 | | > SHAFT END WASHER Ø8/Ø12 316L | 1 |
| 12.3 | | > STOP COLLAR OF IMPELLER M+2/4 SINGLEBLOC | 1 |
| 12.4 | | > STOP-RUSH-1/2-D12xd2-M+316 | 2 |
| 13 | | HYDRAULIC HELIX V 405 1.4307 | 1 |
| 14 | 4178582 | SHAFT D.12X308 1.4301 VP. | 1 |
| 15 | 4174079 | PUMP HOUSING HELIX DN32 PN16 1.4301 KIT | 1 |

| Item | Article no. | Description | Quantity |
|---|---|---|---|
| 7.3 | 4176513 | > O-RING FOR PUMP JACKET VP. | 1 |
| 15.1 | | > BLASTING PPE HOUSING V-PN16-DN32-5"-304 | 1 |
| 15.2 | 4217889 | > COUNTER FLANGE-G1"-PN16-GJL KIT | 1 |
| 15.3 | 4171321 | > PRIMING/DRAIN PLUG EPDM HELIX KIT | 1 |
| 16 | 4177964 | BASEPLATE HELIX V2/4/6 PN16 VP. | 1 |

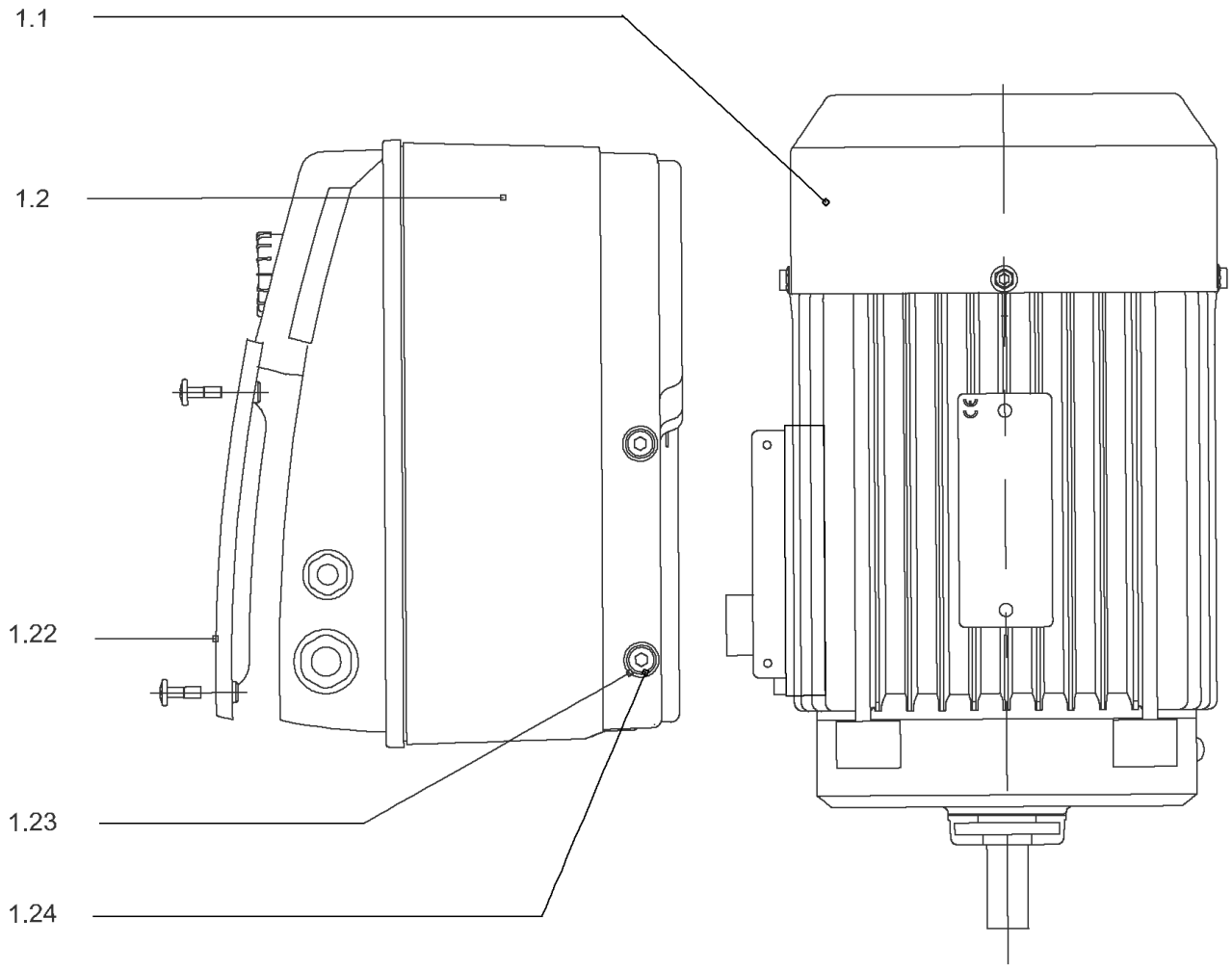
1.1
1.2
1.22
1.23
1.24

## DRIVE HELIX-VE405-IE2-WE KIT

| Item | Article no. | Description | Quantity |
|---|---|---|---|
| 1.1 | 4184817 | MOTOR 1,1/2/80 3~ 380V 60HZ IE2 WE VP. | 1 |
| | | SPARE PARTS MOTOR:ON REQUEST | 1 |
| 1.2 | 4186765 | MODULE HELIX-VE405-IE2-WE KIT | 1 |
| 1.22 | 2054372 | > MODULE COVER TL1,TL2+GASKET KIT | 1 |
| 1.23 | 4215716 | > SCREW M5X16 DIN912 8.8 A2A (4pieces) VP. | 1 |
| 1.24 | 2057978 | > RONDELLE A5,3 DIN6797 FST ZN (4 PIECES) | 1 |

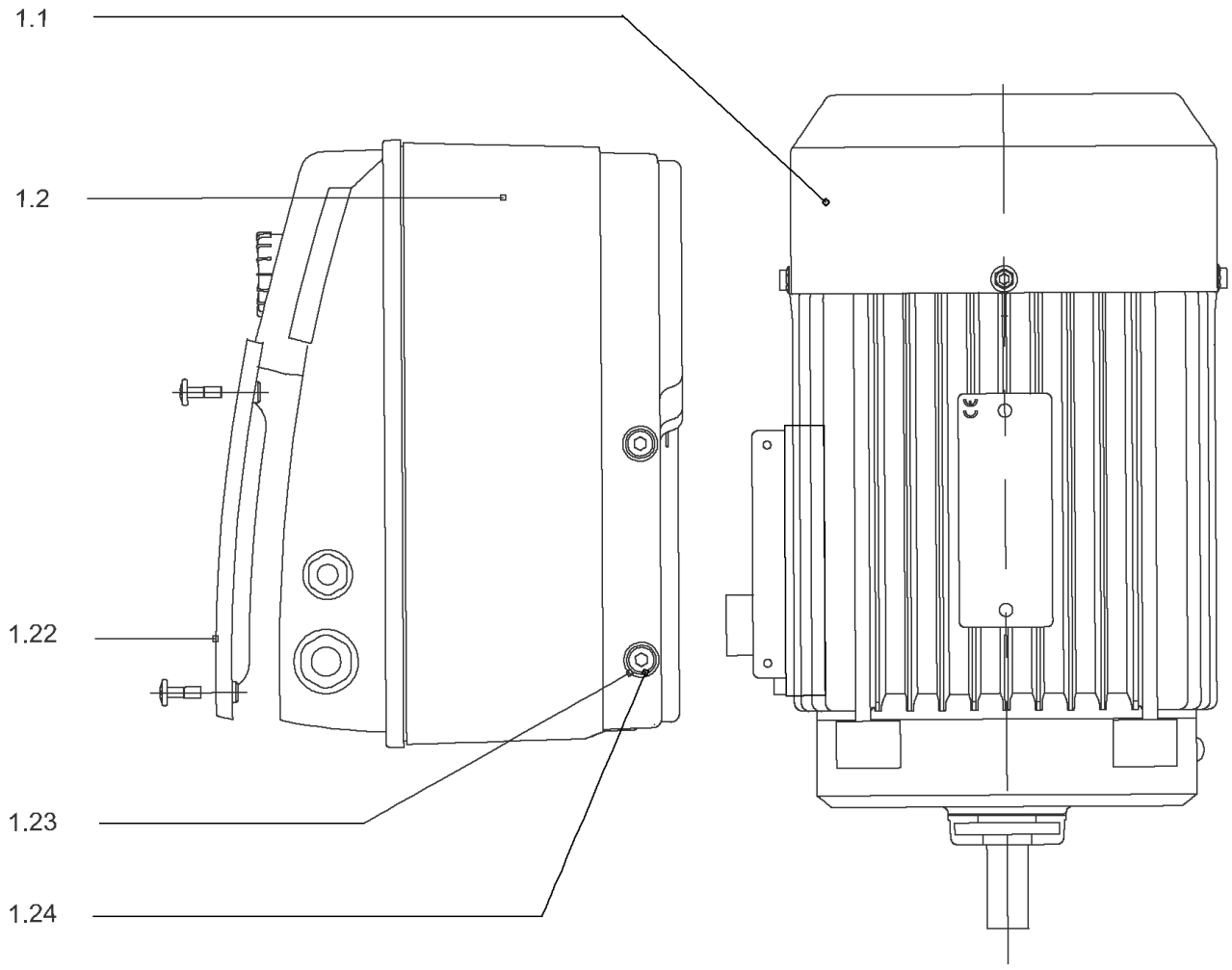
1.1
1.2
1.22
1.23
1.24

## DRIVE HELIX-VE405-IE4-WE KIT

| Item | Article no. | Description | Quantity |
|---|---|---|---|
| 1.1 | 4207916 | MOTOR 1.1/2/80 3~ 380V 60HZ IE4 WE VP. | 1 |
| | | SPARE PARTS MOTOR:ON REQUEST | 1 |
| 1.2 | 4209598 | MODULE HELIX-VE405-IE4-WE KIT | 1 |
| 1.22 | 2054372 | > MODULE COVER TL1,TL2+GASKET KIT | 1 |
| 1.23 | 4215716 | > SCREW M5X16 DIN912 8.8 A2A (4pieces) VP. | 1 |
| 1.24 | 2057978 | > RONDELLE A5,3 DIN6797 FST ZN (4 PIECES) | 1 |

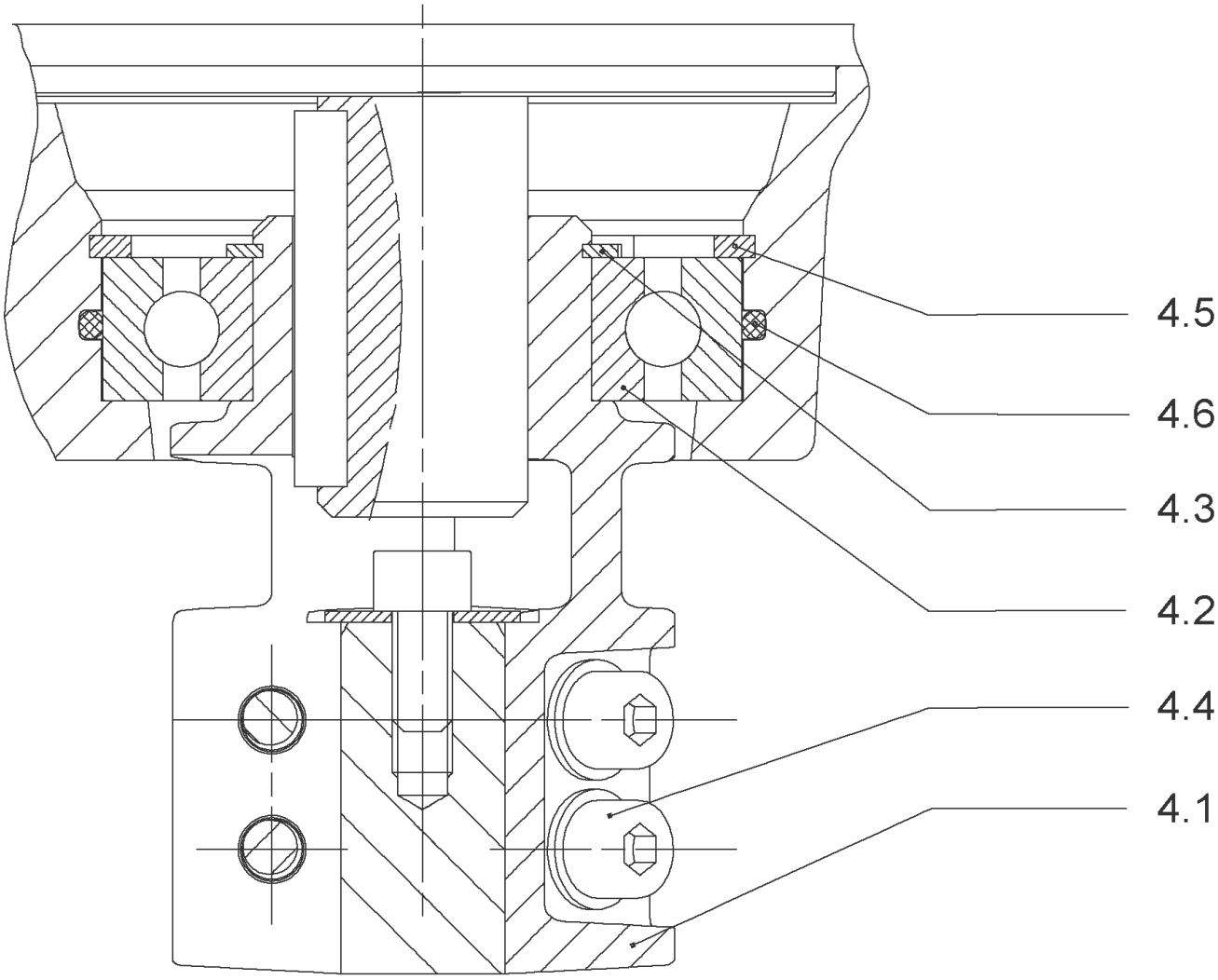
4.5
4.6
4.3
4.2
4.4
4.1

## COUPLING D.12XD.19 FT100 KIT (4178578)

| Item | Article no. | Description | Quantity |
|---|---|---|---|
| 4.1 | | COUPLING-M+ Ø12XØ19-FT100-MACHINED | 1 |
| 4.3 | 4234249 | CIRCLIP-FOR-SHAFT-D30x1.5 VP. | 1 |
| 4.2 | 2130977 | BALL BEARING 6206/ZZ-C3(HT)VP. | 1 |
| 4.4 | 4212716 | SCREW M6X20 KIT (4PIECES) | 1 |
| 4.5 | 4234250 | CIRCLIP-D62x2 VP. | 1 |
| 4.6 | 4234245 | O-RING 63X3 VP. | 1 |
| | | CONTACT-WASHER-6ETR-6,1x12,2x1,8-STEEL | 4 |

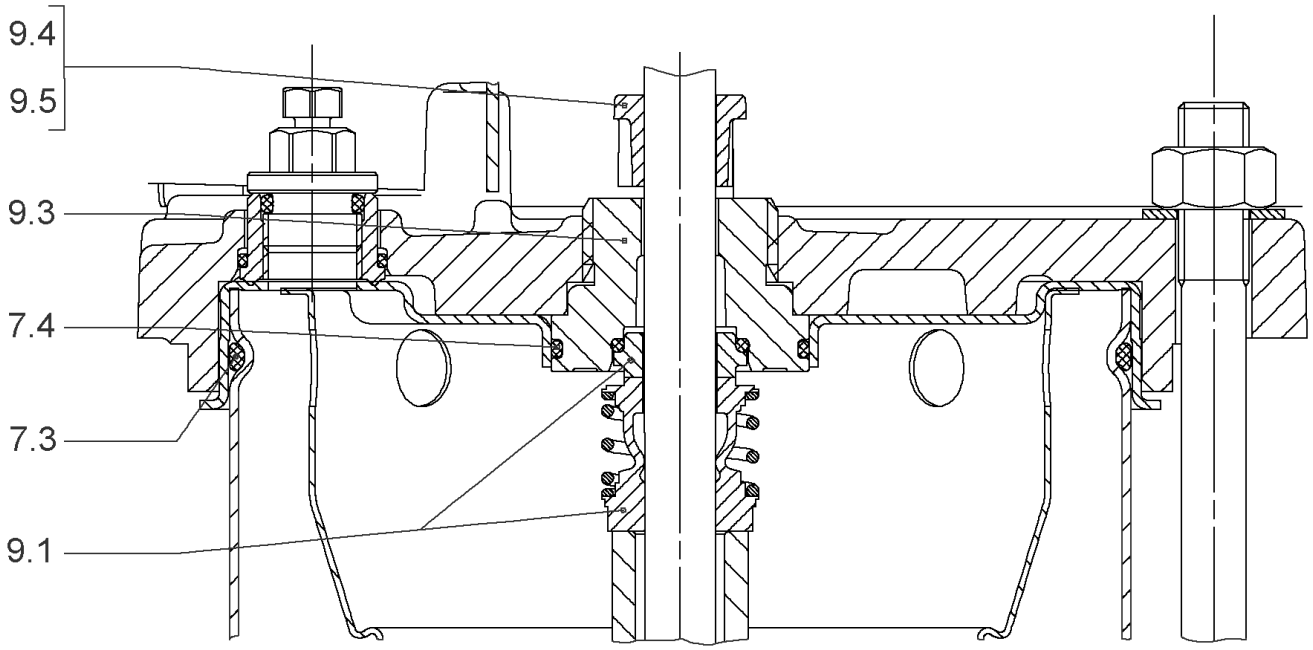
9.4
9.5
9.3
7.4
7.3
9.1

## SEAL-KIT-HELIX2-4 O/E KIT (4178564)

| Item | Article no. | Description | Quantity |
|---|---|---|---|
| 7.3 | 4176513 | O-RING FOR PUMP JACKET VP. | 1 |
| 7.4 | 2127603 | O-RING ID.37,6x2,4 EPDM VP. | 1 |
| 9.1 | 4178563 | M.SEAL.HELIX2-4 O/E VP. | 1 |
| 9.3 | 4178561 | RING HOLDER Ø22 1.4301 VP. | 1 |
| 9.5 | 4178562 | DRIVE RING D.22/12.2X10 MACH.VP. | 1 |
| 9.4 | 4176520 | SCREW CH M5x5 A4-70 ( 3PIECES ) | 1 |

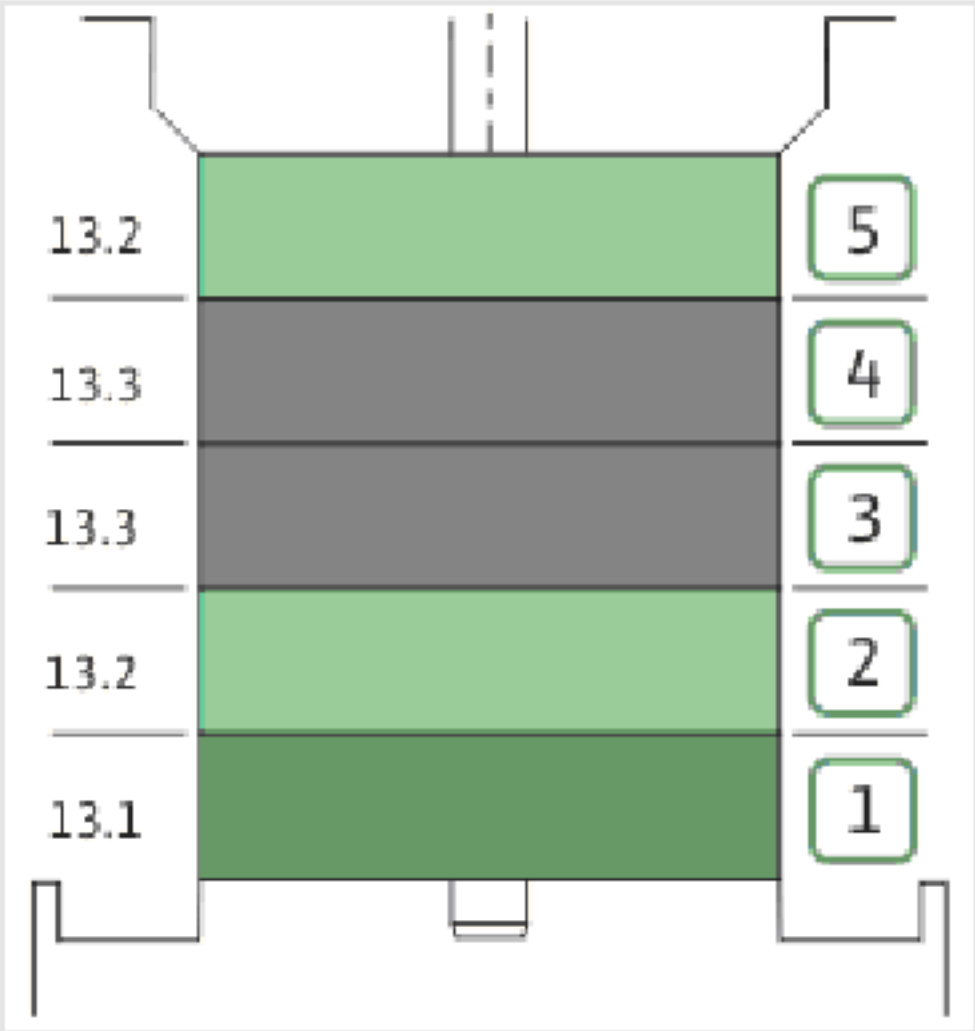
13.2
13.3
13.3
13.2
13.1
5
4
3
2
1

| Item | Article no. | Description | Quantity |
|---|---|---|---|
| 13.1 | 4178570 | STAGE HELIX 4 1.4301 KIT | 1 |
| | | > MACH.STG-CASING-WOGV-WNR-M+2-4-304 | 1 |
| | | > IMPELLER-M+4-304 | 1 |
| 13.2 | 4178569 | STAGE BEARING HELIX 4 1.4301 KIT | 1 |
| | | > MACH.BEARING-STG-CASING-WNR-M+4-304 | 1 |
| | | > IMPELLER-M+4-304 | 1 |
| | | > SHAFT SLEEVE SPACER Ø15,35x10,305-304 | 1 |
| | | > SHAFT-SLEEVE-D12xD16x14-CW | 1 |
| 13.3 | 4178574 | INTER STAGE HELIX4 1.4301< 15 stages KIT | 1 |
| | | > MACH.STD-STG-CASING-WGV+NR-M+4-304 | 1 |
| | | > IMPELLER-M+4-304 | 1 |
| | | > IMPELLER SPACER Ø12,05X14,85-L24,285-304 | 1 |

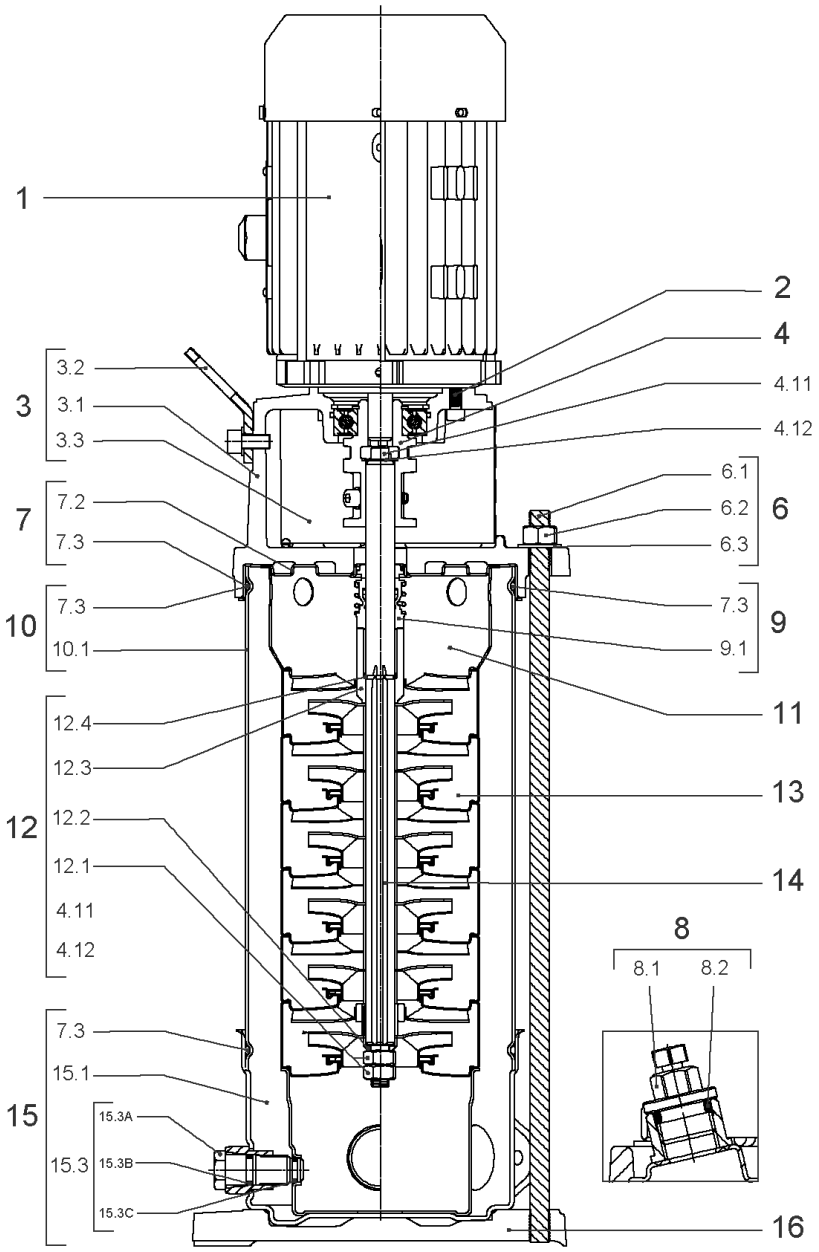
1
2
4
4.11
4.12
3
3.2
3.1
3.3
7
7.2
7.3
6
6.1
6.2
6.3
10
7.3
10.1
9
7.3
9.1
11
12
12.4
12.3
12.2
12.1
4.11
4.12
13
14
8
8.1
8.2
15
7.3
15.1
15.3
15.3A
15.3B
15.3C
16

## HELIX VE405-1/16/E/S (4201571)

| Item | Article no. | Description | Quantity |
|---|---|---|---|
| 1 | | DRIVE HELIX-VE405-IE4-WE KIT | 1 |
| Note: MOTOR BRAND WILO ELEC | | | |
| | | SPARE PARTS MOTOR:ON REQUEST | 1 |
| 2 | 4212716 | SCREW M6X20 KIT (4PIECES) | 1 |
| 3 | 4213752 | LANTERN FT100 HELIX KIT | 1 |
| 3.1 | | > LANT-MOT-VMI-ReDTC6"-FT100-MACHINED+CATA | 1 |
| 3.2 | 4184852 | > EYELET CPL.FT HELIX (2 PIECES) | 1 |
| 3.3 | 4213713 | > COUPLING PROTECTOR FT85/100 HELIX KIT | 1 |
| 4 | 4178578 | COUPLING D.12XD.19 FT100 KIT | 1 |
| 6 | 4178579 | STUD BOLT M12X317 KIT | 1 |
| 6.1 | | > TIE BOLT M12-317x18x30-1.4057 | 1 |
| 6.2 | 2094647 | > NUT M12 M12 ISO4032 VP. | 1 |
| 6.3 | 2123557 | > WASHER CS-12.4-24-1.6-NFE25 (4 PIECES) | 1 |
| 7 | 4212722 | STATIONARY RING HOLDER HELIX D23 ReDTC | 1 |
| 7.2 | 4212720 | > STATIONARY RING HOLDER HELIX D23 VP. | 1 |
| 7.3 | 4176513 | > O-RING FOR PUMP JACKET VP. | 1 |
| 8 | 4212724 | FILING/PURGING PLUG HELIX ReDTC KIT | 1 |
| 8.1 | | > FILLING PLUG MVI6"-304 | 1 |
| 8.2 | 4177800 | > O-RING EPDM PLUG HELIX VP. | 1 |
| 9 | 4212726 | MECH.SEAL HELIX V2/4 O/E ReDTC KIT | 1 |
| 9.1 | 4178563 | > M.SEAL.HELIX2-4 O/E VP. | 1 |
| 7.3 | 4176513 | > O-RING FOR PUMP JACKET VP. | 1 |
| 10 | 4178580 | HOUSING PIPE D.152X184 1.4301 KIT | 1 |
| 7.3 | 4176513 | > O-RING FOR PUMP JACKET VP. | 1 |
| 10.1 | | > HOUSING-PIPE Ø152-M+205/405-304 | 1 |
| 11 | 4178566 | CENTERING STAGE-RETURN HELIX4 1.4307 VP | 1 |
| 12 | 4212729 | SHAFT EQUIPMENT HELIX V2/4 ReDTC KIT | 1 |
| 12.1 | | > NUT-H-M8-STAINLESS-STEEL A4-70 | 1 |
| 12.2 | | > SHAFT END WASHER Ø8/Ø12 316L | 1 |
| 12.3 | | > 1/2-SNAP-RING-2/4M3-316L | 1 |
| 12.4 | | > STOP-RUSH-1/2-D12xd2-M+316 | 1 |
| 4.11 | | > SCREW CHC-M6X14-8.8-ISO4762-GEOMET500A | 1 |
| 4.12 | | > WASHER D.24 L6U ZINK | 1 |
| 13 | | HYDRAULIC HELIX V 405 1.4307 | 1 |

| Item | Article no. | Description | Quantity |
|---|---|---|---|
| 14 | 4213746 | SHAFT D.12X256 HELIX 1.4057 VP. | 1 |
| 15 | 4174079 | PUMP HOUSING HELIX DN32 PN16 1.4301 KIT | 1 |
| 7.3 | 4176513 | > O-RING FOR PUMP JACKET VP. | 1 |
| 15.1 | | > BLASTING PPE HOUSING V-PN16-DN32-5"-304 | 1 |
| 15.2 | 4217889 | > COUNTER FLANGE-G1"-PN16-GJL KIT | 1 |
| 15.3 | 4171321 | > PRIMING/DRAIN PLUG EPDM HELIX KIT | 1 |
| 16 | 4177964 | BASEPLATE HELIX V2/4/6 PN16 VP. | 1 |

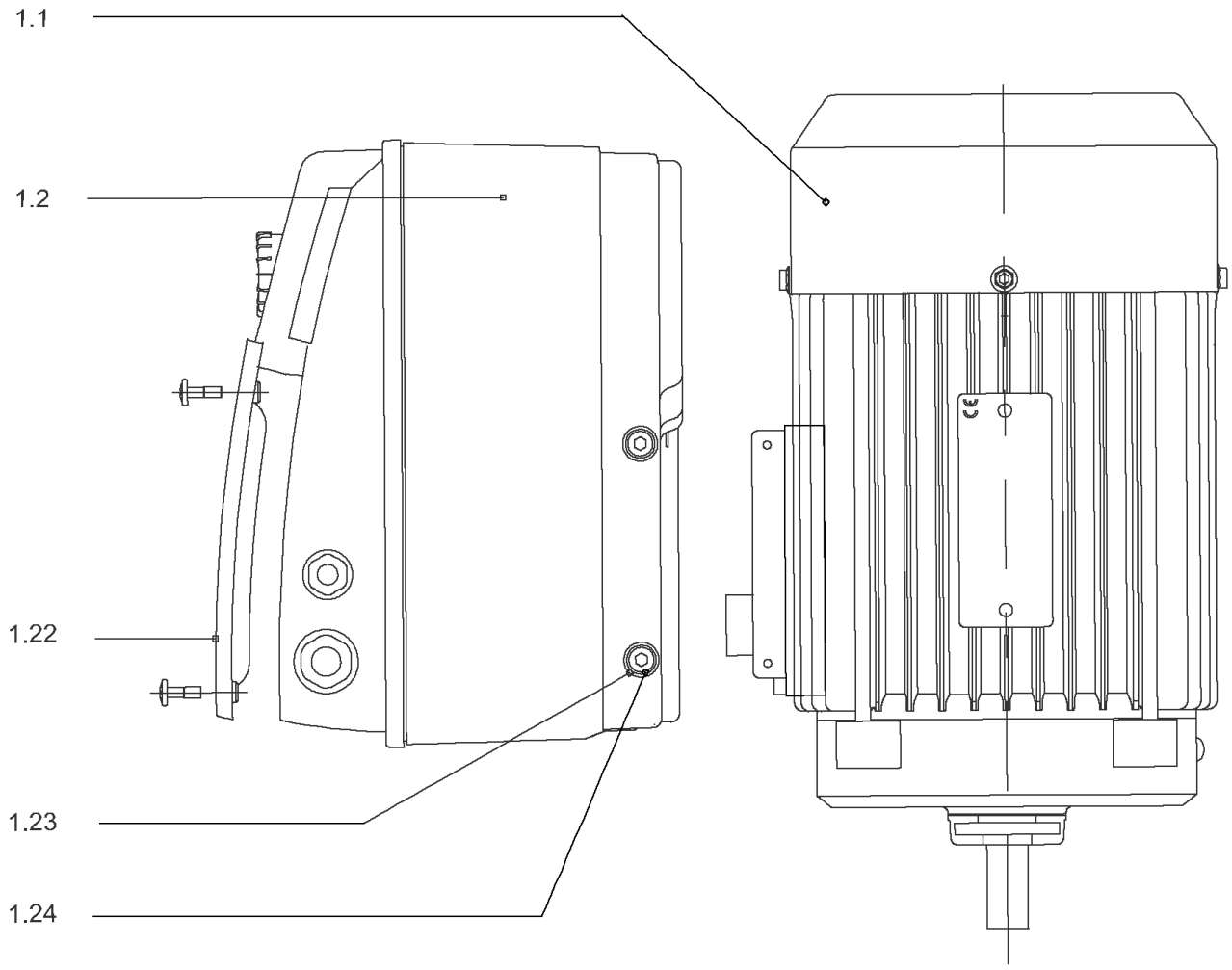
1.1
1.2
1.22
1.23
1.24

## DRIVE HELIX-VE405-IE4-WE KIT

| Item | Article no. | Description | Quantity |
|---|---|---|---|
| 1.1 | 4207916 | MOTOR 1.1/2/80 3~ 380V 60HZ IE4 WE VP. | 1 |
| | | SPARE PARTS MOTOR:ON REQUEST | 1 |
| 1.2 | 4209598 | MODULE HELIX-VE405-IE4-WE KIT | 1 |
| 1.22 | 2054372 | > MODULE COVER TL1,TL2+GASKET KIT | 1 |
| 1.23 | 4215716 | > SCREW M5X16 DIN912 8.8 A2A (4pieces) VP. | 1 |
| 1.24 | 2057978 | > RONDELLE A5,3 DIN6797 FST ZN (4 PIECES) | 1 |

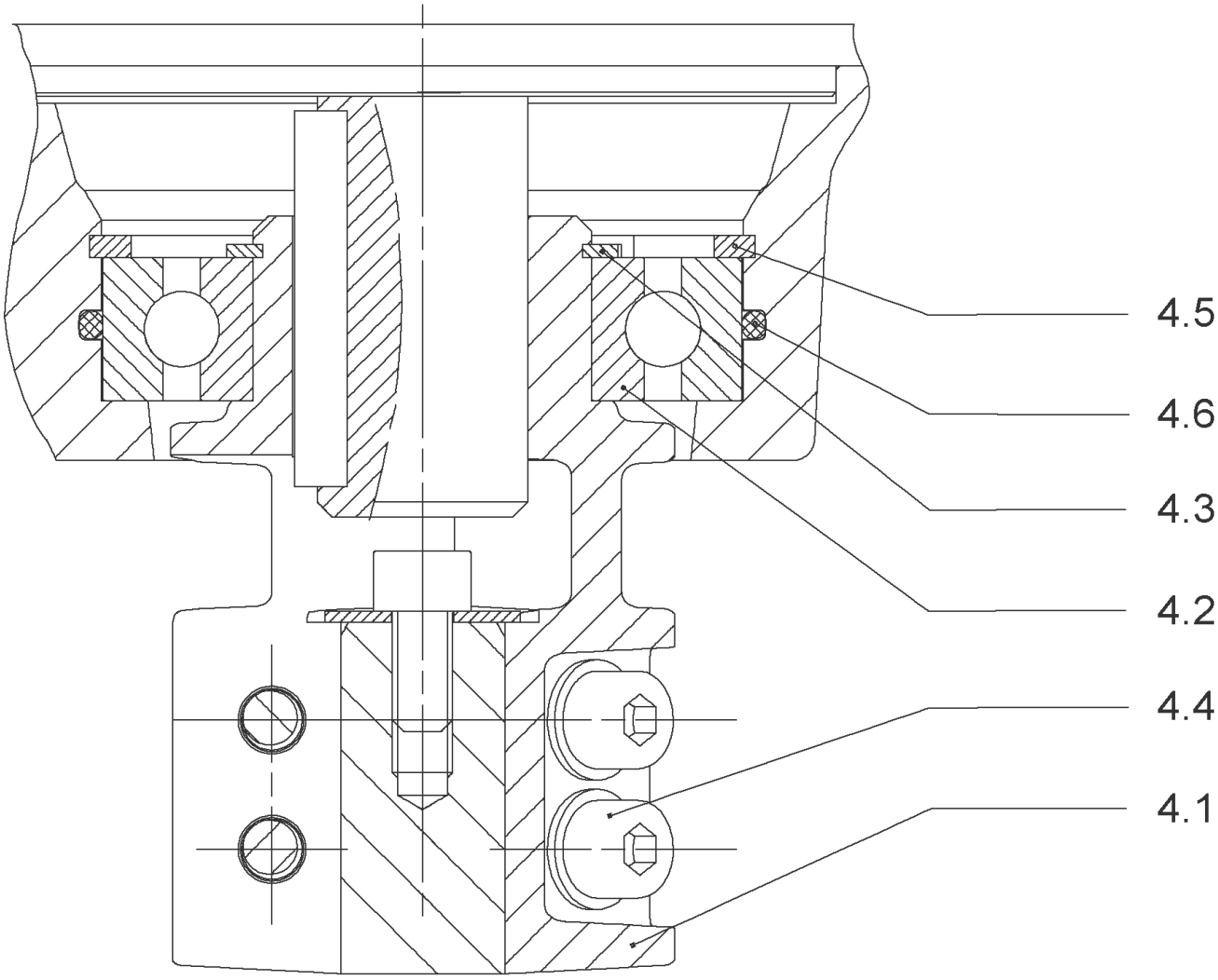
4.5
4.6
4.3
4.2
4.4
4.1

## COUPLING D.12XD.19 FT100 KIT (4178578)

| Item | Article no. | Description | Quantity |
|---|---|---|---|
| 4.1 | | COUPLING-M+ Ø12XØ19-FT100-MACHINED | 1 |
| 4.3 | 4234249 | CIRCLIP-FOR-SHAFT-D30x1.5 VP. | 1 |
| 4.2 | 2130977 | BALL BEARING 6206/ZZ-C3(HT)VP. | 1 |
| 4.4 | 4212716 | SCREW M6X20 KIT (4PIECES) | 1 |
| 4.5 | 4234250 | CIRCLIP-D62x2 VP. | 1 |
| 4.6 | 4234245 | O-RING 63X3 VP. | 1 |
| | | CONTACT-WASHER-6ETR-6,1x12,2x1,8-STEEL | 4 |

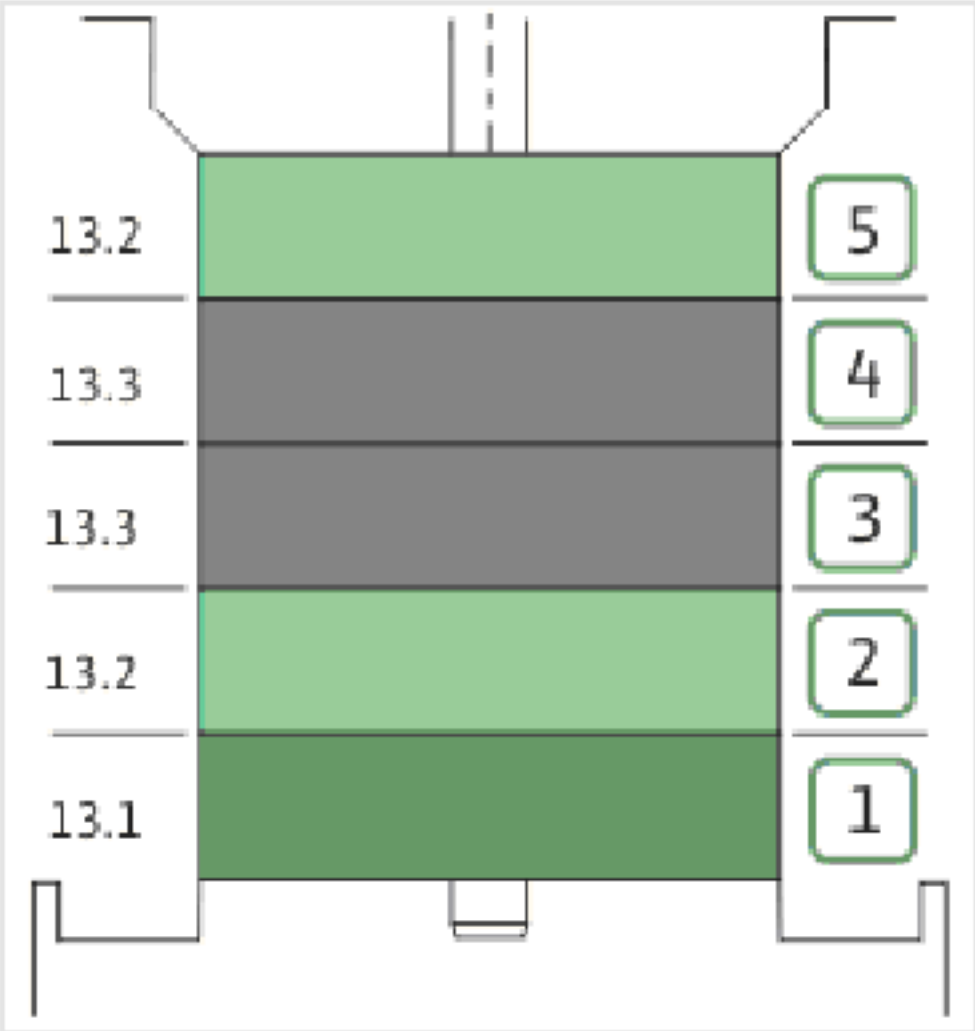
13.2
13.3
13.3
13.2
13.1
5
4
3
2
1

| Item | Article no. | Description | Quantity |
|---|---|---|---|
| 13.1 | 4178570 | STAGE HELIX 4 1.4301 KIT | 1 |
| | | > MACH.STG-CASING-WOGV-WNR-M+2-4-304 | 1 |
| | | > IMPELLER-M+4-304 | 1 |
| 13.2 | 4178569 | STAGE BEARING HELIX 4 1.4301 KIT | 1 |
| | | > MACH.BEARING-STG-CASING-WNR-M+4-304 | 1 |
| | | > IMPELLER-M+4-304 | 1 |
| | | > SHAFT SLEEVE SPACER Ø15,35x10,305-304 | 1 |
| | | > SHAFT-SLEEVE-D12xD16x14-CW | 1 |
| 13.3 | 4178574 | INTER STAGE HELIX4 1.4301< 15 stages KIT | 1 |
| | | > MACH.STD-STG-CASING-WGV+NR-M+4-304 | 1 |
| | | > IMPELLER-M+4-304 | 1 |
| | | > IMPELLER SPACER Ø12,05X14,85-L24,285-304 | 1 |

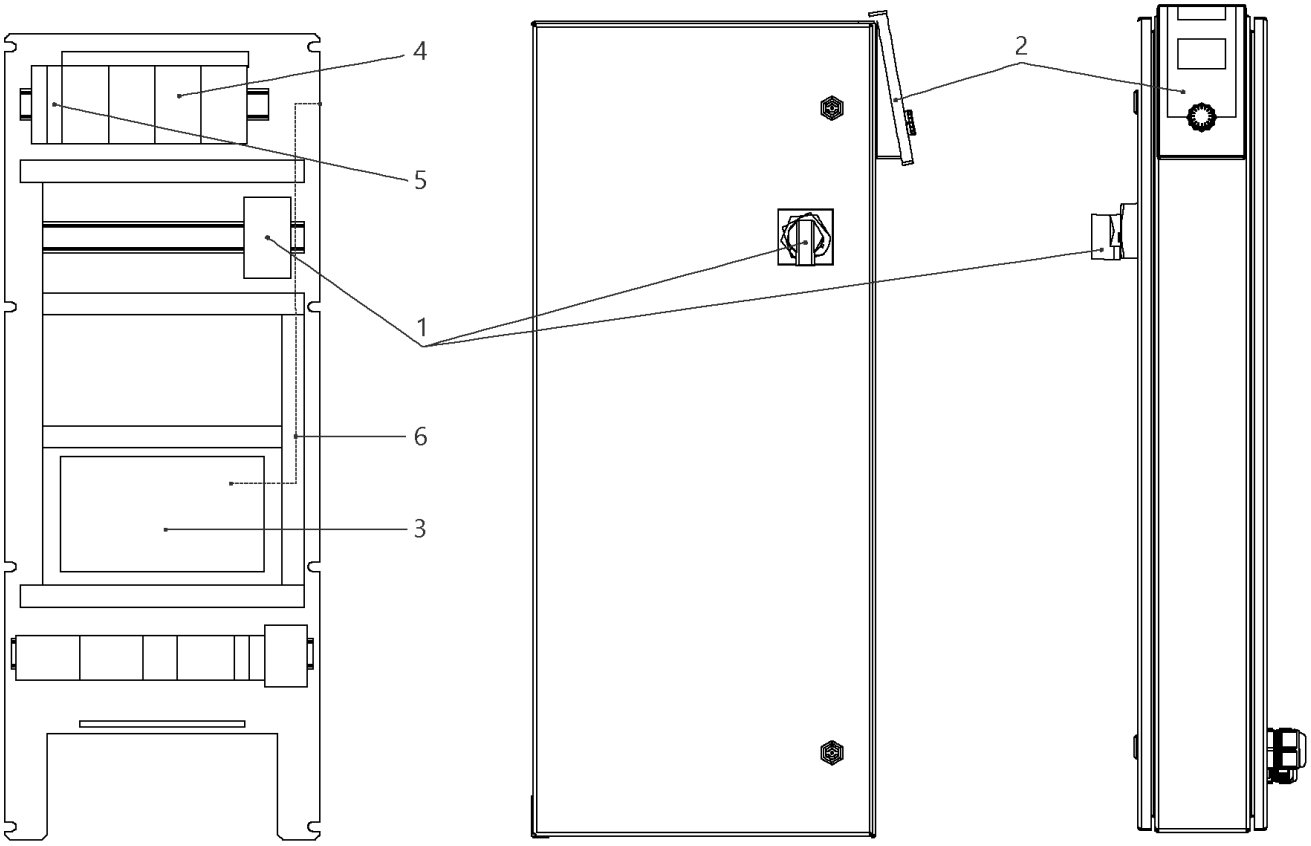
4
5
1
6
3
2

## W-CTRL-SCE-B-2x1,1KW-T4-FM-ND2

| Item | Article no. | Description | Quantity |
|---|---|---|---|
| 1 | 2104470 | MAIN SWITCH OT40F3 L250 KIT | 1 |
| 2 | 4184784 | CONTROL PANEL HMI SC KIT | 1 |
| 2 | 4185259 | ASSEMBLY DISPLAY SC PKG VP. | 1 |
| 3 | 4185257 | ASSEMBLY CPU SCe Booster VP. | 1 |
| 4 | 2051217 | AUTOM.CIRCUIT BREAKER S203 B16 TO7,5kW | 1 |
| 5 | 2046288 | CIRCUIT BREAKER S201 B16 | 1 |
| 6 | 4194956 | PATCH CABLE RJ45 CAT6 1,0M BLUE SC-PANEL | 1 |

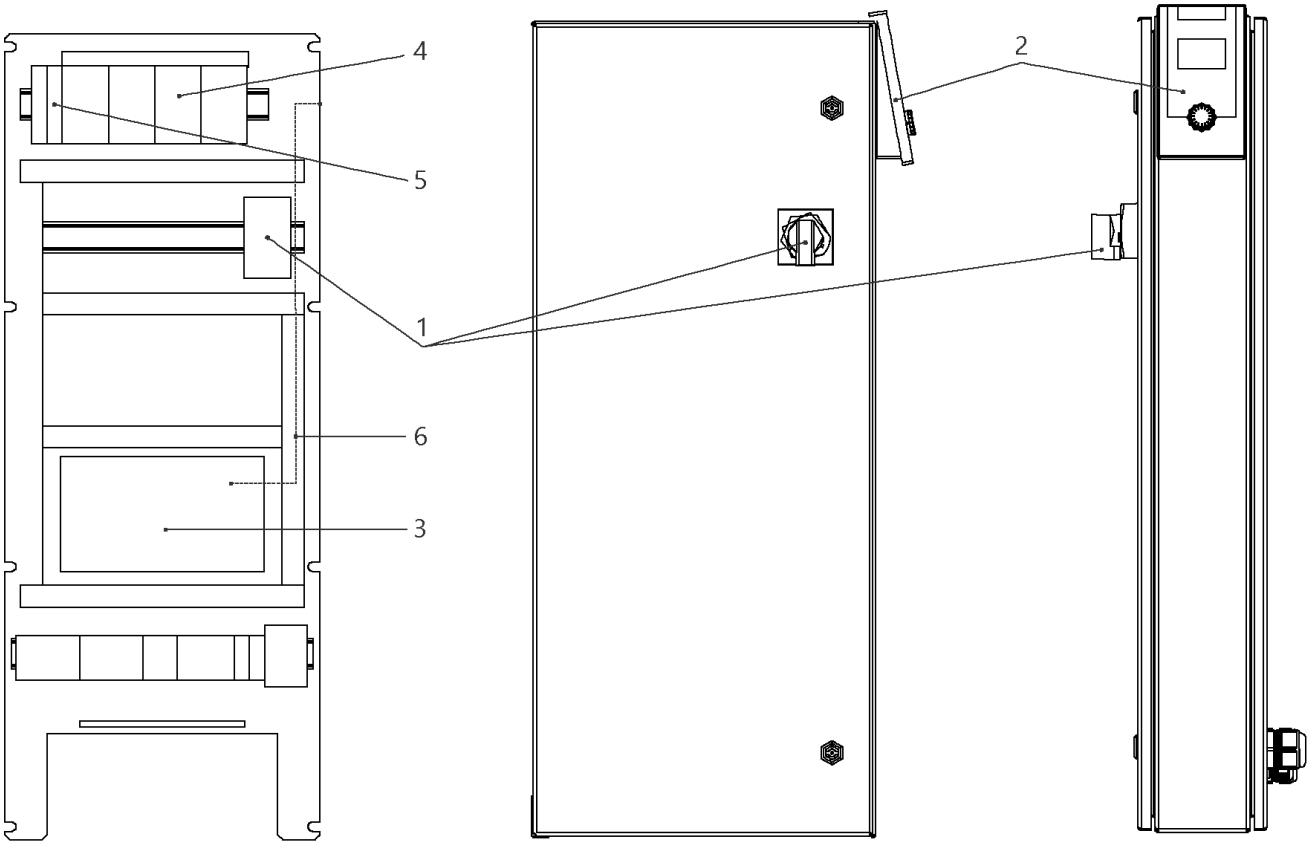
4
5
1
6
3
2

## W-CTRL-SCE-B-2x0,55-1,5KW-T4-FM-ND1

| Item | Article no. | Description | Quantity |
|---|---|---|---|
| 1 | 2104470 | MAIN SWITCH OT40F3 L250 KIT | 1 |
| 2 | 4184784 | CONTROL PANEL HMI SC KIT | 1 |
| 2 | 4185259 | ASSEMBLY DISPLAY SC PKG VP. | 1 |
| 3 | 4185257 | ASSEMBLY CPU SCe Booster VP. | 1 |
| 4 | 2051217 | AUTOM.CIRCUIT BREAKER S203 B16 TO7,5kW | 1 |
| 5 | 2046288 | CIRCUIT BREAKER S201 B16 | 1 |
| 6 | 4197081 | CABLE RJ45 CAT6 0,5M RED SC-PANEL VP. | 1 |

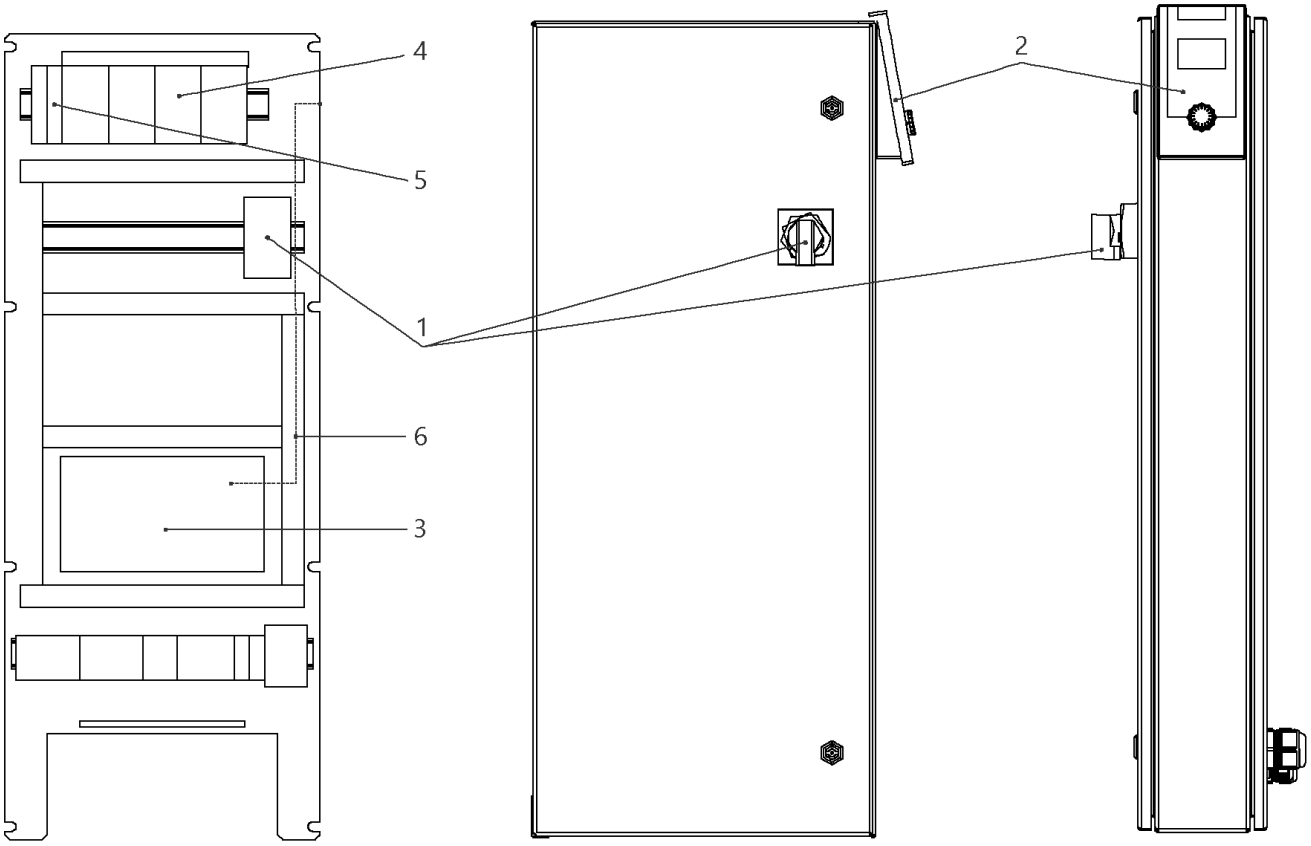
4
5
1
6
3
2

## W-CTRL-SCE-B-2x10A-T34-FM-ND1-AVC-PKG (2541913)

| Item | Article no. | Description | Quantity |
|---|---|---|---|
| 1 | 2104470 | MAIN SWITCH OT40F3 L250 KIT | 1 |
| 2 | 4184784 | CONTROL PANEL HMI SC KIT | 1 |
| 2 | 4185259 | ASSEMBLY DISPLAY SC PKG VP. | 1 |
| Note: DISPLAY ALONE / PLATINE SEULE | | | |
| 3 | 4185257 | ASSEMBLY CPU SCe Booster VP. | 1 |
| 4 | 2119861 | AUTOMATIC CIRCUIT BREAKER S203 B13 3POL. | 1 |
| 5 | 2046288 | CIRCUIT BREAKER S201 B16 | 1 |
| 6 | 4197081 | CABLE RJ45 CAT6 0,5M RED SC-PANEL VP. | 1 |

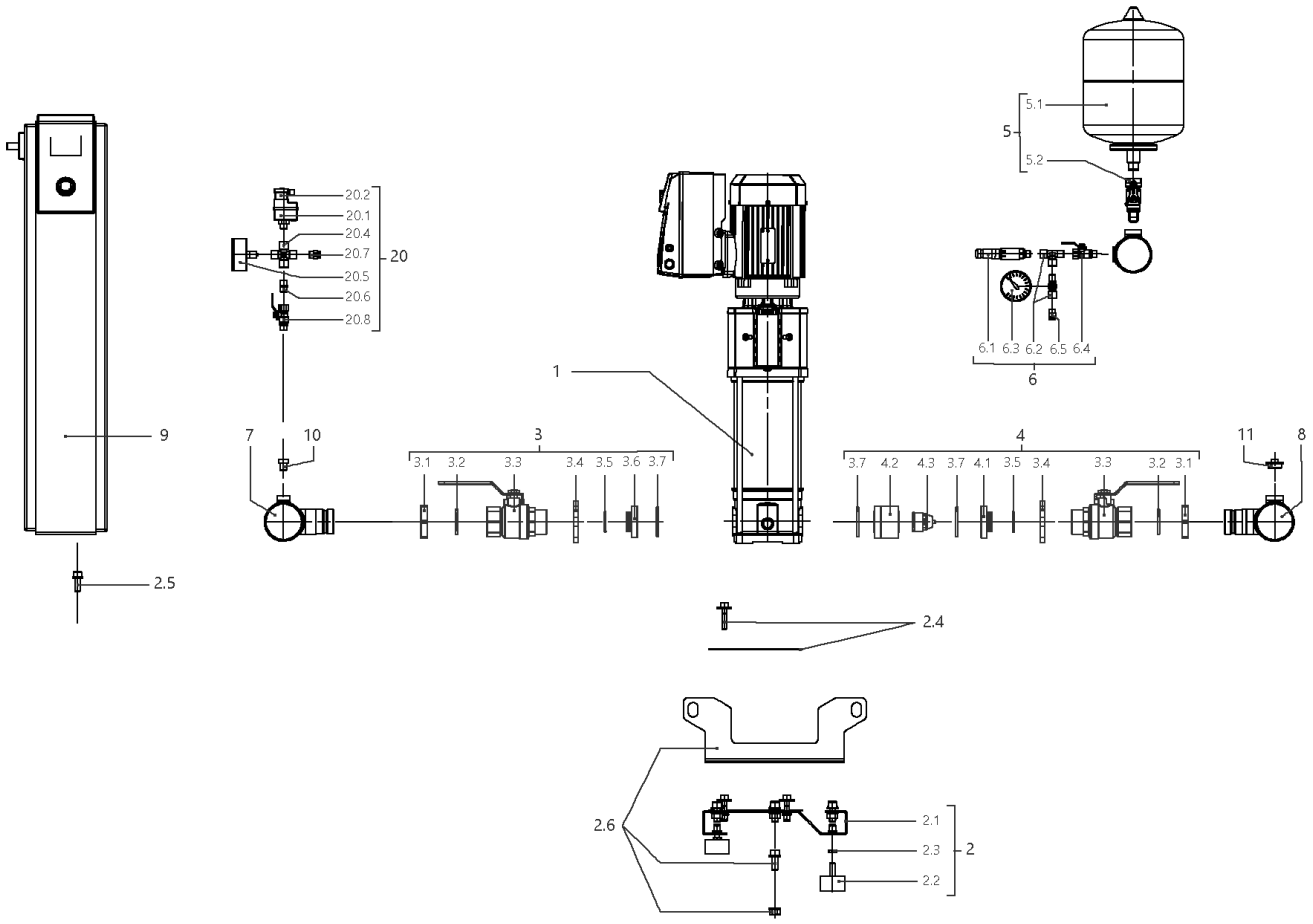
5.1
5
5.2
20.2
20.1
20.4
20.7
20
20.5
20.6
20.8
6.1 6.3 6.2 6.5 6.4
6
1
9
7
10
3
3.1 3.2 3.3 3.4 3.5 3.6 3.7
4
3.7 4.2 4.3 3.7 4.1 3.5 3.4 3.3 3.2 3.1
11
8
2.5
2.4
2.6
2.1
2.3
2
2.2

## SiBoost Smart 2HELIX VE407 (2537331)

| Item | Article no. | Description | Quantity |
|---|---|---|---|
| 1 | | HELIX VE407-1/16/E/S | 1 |
| Note: TO / BIS / JUSQU'AU 31/03/2016 | | | |
| 1 | 4201573 | HELIX VE407-1/16/E/S | 1 |
| Note: FROM / AB / À PARTIR DU 01/04/2016 | | | |
| 2 | 4199874 | BASE PLATE DE2 850x300 M10 KIT | 1 |
| 2.1 | | > BASEPLATE_2x4/6/10V_E300_850x300_BOX_150 | 1 |
| 2.2 | 2028654 | > VIBRATION DAMPER D.50X30 M10X28 | 1 |
| 2.3 | 2028281 | > NUT M10 DIN936 (ISO4035) 17H VZ | 1 |
| 2.4 | 4199875 | > HOLDER PUMP Siboost Helix V2/4 KIT | 1 |
| 2.5 | 4197084 | > HOLDER SWITCHBOX WILO Smart Control KIT | 1 |
| 2.6 | 4197085 | > LIFTING Siboost HELIX SC KIT | 1 |
| 3 | 4199876 | SUCTION SIDE Siboost Helix V2/4/6 KIT | 1 |
| 3.1 | 2032610 | > NUT G11/4 MS VP. | 1 |
| 3.2 | 2032611 | > O-RING ID.36,09X3,53N DIN3771 E7502 | 1 |
| 3.3 | 2507646 | > BALL VALVE G11/4"M-F-W.HANDLE 1/4-TURN | 1 |
| 3.4 | 2032613 | > SCREWED FLANGE G1 1/4" LK-75 ST37VZ | 1 |
| 3.5 | 2032614 | > O-RING ID.29,82X2,62N DIN3771 E7502 | 1 |
| 3.6 | 2032615 | > SPACER F.I/A KUH.DN32 CUZN | 1 |
| 3.7 | 2032616 | > O-RING ID.44X3,53N DIN3771 E7502 | 1 |
| 4 | 4199877 | DELIVERY SIDE Siboost Helix V2/4/6 KIT | 1 |
| 3.1 | 2032610 | > NUT G11/4 MS VP. | 1 |
| 3.2 | 2032611 | > O-RING ID.36,09X3,53N DIN3771 E7502 | 1 |
| 3.3 | 2507646 | > BALL VALVE G11/4"M-F-W.HANDLE 1/4-TURN | 1 |
| 3.4 | 2032613 | > SCREWED FLANGE G1 1/4" LK-75 ST37VZ | 1 |
| 3.5 | 2032614 | > O-RING ID.29,82X2,62N DIN3771 E7502 | 1 |
| 4.1 | 2058116 | > SPACER F.I/A KUH.DN32 CUZN | 1 |
| 3.7 | 2032616 | > O-RING ID.44X3,53N DIN3771 E7502 | 1 |
| 4.2 | 2058115 | > HOUSING RFV(RV-IN) DN32 SGS/DRS | 1 |
| 4.3 | 2027870 | > NON-RETURN-DEVICE INSERT DN32(MTR) | 1 |
| 5 | 2032642 | DIAPHREM TANK 8L/PN16 DIN4807/T5 KIT | 1 |
| 5.1 | 2045914 | > DIAPHREM TANK 8L TYP-DD 16BAR | 1 |
| 5.2 | 2027853 | > FLOW FITTING G3/4 FOR DIAPHRAGM VES. | 1 |
| 6 | 4197076 | PRESSURE SENSOR/ GAUGE 0-16BAR KIT | 1 |
| 6.1 | 2085909 | > PRESS.SENSOR 1/4" 0-16BAR 4-20MA VP. | 1 |

| Item | Article no. | Description | Quantity |
|---|---|---|---|
| 6.2 | 4197077 | > T-PIECE 1/4" VP. | 1 |
| 6.3 | 2028692 | > PRESSURE GAUGE NG63-PN16-G1/4 | 1 |
| 6.4 | 2028291 | > BALL TAP R1/4" PN42 GIACOMINI R254DL | 1 |
| 6.5 | 2028691 | > BLOWGUN 1/4" MS 30BAR VP. | 1 |
| 7 | 4199878 | PIPE DE2 11/2''-2x11/4"+1x1/4x600 VP. | 1 |
| 8 | 4199879 | PIPE DE2 11/2''-2x11/4"+1x1/4+1x3/4x600 | 1 |
| 9 | | W-CTRL-SCE-B-2x0,55-1,5KW-T4-FM-ND1 | 1 |
| Note: TO / BIS / JUSQU'AU 18/05/2014 | | | |
| 9 | 2541913 | W-CTRL-SCE-B-2x10A-T34-FM-ND1-AVC-PKG | 1 |
| Note: FROM / AB / À PARTIR DU 19/05/2014 | | | |
| 10 | 4197079 | PLUG G1/4"x10 AISI304 KIT | 1 |
| 11 | 2032654 | PLUG R3/4" MS VIEGA 1751 | 1 |
| 20 | 2521150 | ASSEMBLY WMS. DE-EB. +VP | 1 |
| 20.1 | 2028652 | > PRESSURE SWITCH PS3-ASR 1/(1,3) VP. | 1 |
| 20.2 | 2130983 | > PLUG PS3-415 WITH KABEL 1,5M 2NO VP. | 1 |
| 20.4 | 2028290 | > CROSSPIECE R1/4" MS-NICKEL | 1 |
| 20.5 | 2028687 | > PRESSURE GAUGE NG63 R1/4" HI.0-6BAR | 1 |
| 20.6 | 2054268 | > DUAL NIPPLE G1/4" x G1/4" MS VP. | 1 |
| 20.7 | 2028691 | > BLOWGUN 1/4" MS 30BAR VP. | 1 |
| 20.8 | 2028291 | > BALL TAP R1/4" PN42 GIACOMINI R254DL | 1 |

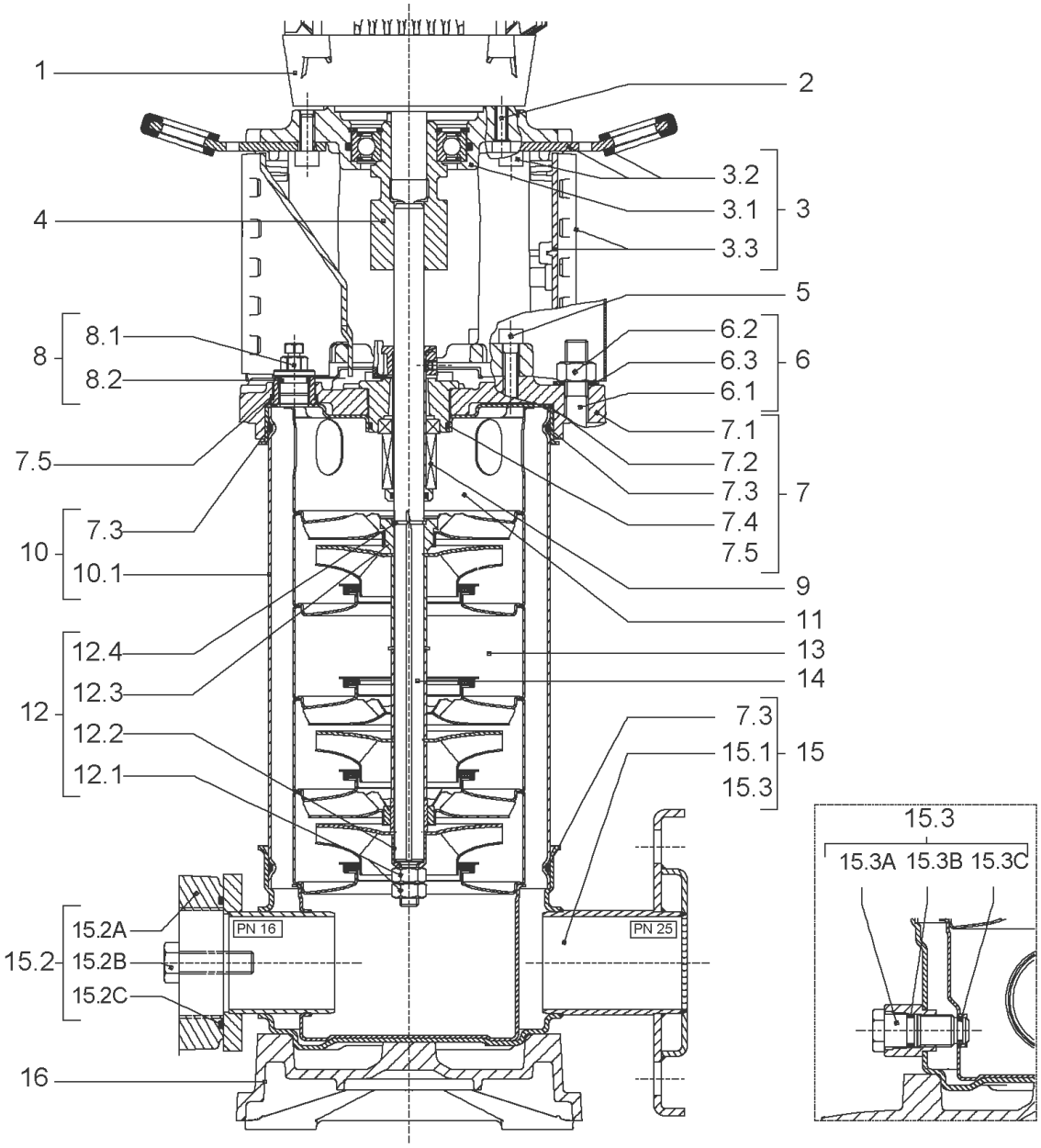
1
2
3.2
3.1
3
3.3
4
5
8.1
8
8.2
6.2
6.3
6
6.1
7.1
7.5
7.2
7.3
7
7.4
7.3
10
7.5
10.1
9
11
12.4
13
12.3
14
12
12.2
7.3
15.1
15
12.1
15.3
15.3
15.3A 15.3B 15.3C
15.2A
PN 16
PN 25
15.2
15.2B
15.2C
16

| Item | Article no. | Description | Quantity |
|---|---|---|---|
| 1 | | DRIVE HELIX-VE407-IE2-WE KIT | 1 |
| Note: MOTOR BRAND WILO ELEC | | | |
| 1 | | DRIVE HELIX-VE407-IE4-WE KIT | 1 |
| Note: MOTOR BRAND WILO ELEC | | | |
| 2 | 4159703 | SCREW M8X40 (4 PIECES) | 1 |
| 3 | 4172795 | LANTERNE FT115 HELIX KIT | 1 |
| 3.1 | | > M+5_6_LANTERN_ONE-PIECE_FT115_CATA | 1 |
| 3.2 | 2127604 | > EYELET CPL.FT HELIX(2 PIECES) | 1 |
| 3.3 | 4159692 | > COUPLING PROTECTOR FT HELIX KIT | 1 |
| 4 | 4178600 | COUPLING D.12XD.24 FT115 KIT | 1 |
| 5 | 4159707 | SCREW M8X30 (4 PIECES) | 1 |
| 6 | 4178585 | STUD BOLT M12X365 KIT | 1 |
| 6.1 | | > TIE BOLT M12-365x18x30-1.4057 | 1 |
| 6.2 | 2094647 | > NUT M12 M12 ISO4032 VP. | 1 |
| 6.3 | 2123557 | > WASHER CS-12.4-24-1.6-NFE25 (4 PIECES) | 1 |
| 7 | 4210143 | STATIONARY RING HOLDER HELIX 6" EPDM | 1 |
| 7.2 | 2127607 | > STATIONARY RING HOLDER 6" HELIX 1.4301 V | 1 |
| 7.3 | 4176513 | > O-RING FOR PUMP JACKET VP. | 1 |
| 7.4 | 2127603 | > O-RING ID.37,6x2,4 EPDM VP. | 1 |
| 7.5 | 2127602 | > O-RING ID.21,35x2 EPDM VP. | 1 |
| 8 | 4159686 | FILING/PURGING PLUG HELIX EPDM KIT | 1 |
| 9 | 4178564 | SEAL-KIT-HELIX2-4 O/E KIT | 1 |
| 10 | 4178586 | HOUSING-PIPE D.152X235 1.4301 KIT | 1 |
| 7.3 | 4176513 | > O-RING FOR PUMP JACKET VP. | 1 |
| 10.1 | | > HOUSING-PIPE Ø152-M+207/407-304 | 1 |
| 11 | 4178566 | CENTERING STAGE-RETURN HELIX4 1.4307 VP | 1 |
| 12 | 4178568 | SHAFT EQUIPMENT HELIX V2/V4 KIT | 1 |
| 12.1 | | > NUT-H-M8-STAINLESS-STEEL A4-70 | 2 |
| 12.2 | | > SHAFT END WASHER Ø8/Ø12 316L | 1 |
| 12.3 | | > STOP COLLAR OF IMPELLER M+2/4 SINGLEBLOC | 1 |
| 12.4 | | > STOP-RUSH-1/2-D12xd2-M+316 | 2 |
| 13 | | HYDRAULIC HELIX V 407 1.4307 | 1 |
| 14 | 4178587 | SHAFT D.12X358 1.4301 VP. | 1 |
| 15 | 4174079 | PUMP HOUSING HELIX DN32 PN16 1.4301 KIT | 1 |

| Item | Article no. | Description | Quantity |
|---|---|---|---|
| 7.3 | 4176513 | > O-RING FOR PUMP JACKET VP. | 1 |
| 15.1 | | > BLASTING PPE HOUSING V-PN16-DN32-5"-304 | 1 |
| 15.2 | 4217889 | > COUNTER FLANGE-G1"-PN16-GJL KIT | 1 |
| 15.3 | 4171321 | > PRIMING/DRAIN PLUG EPDM HELIX KIT | 1 |
| 16 | 4177964 | BASEPLATE HELIX V2/4/6 PN16 VP. | 1 |

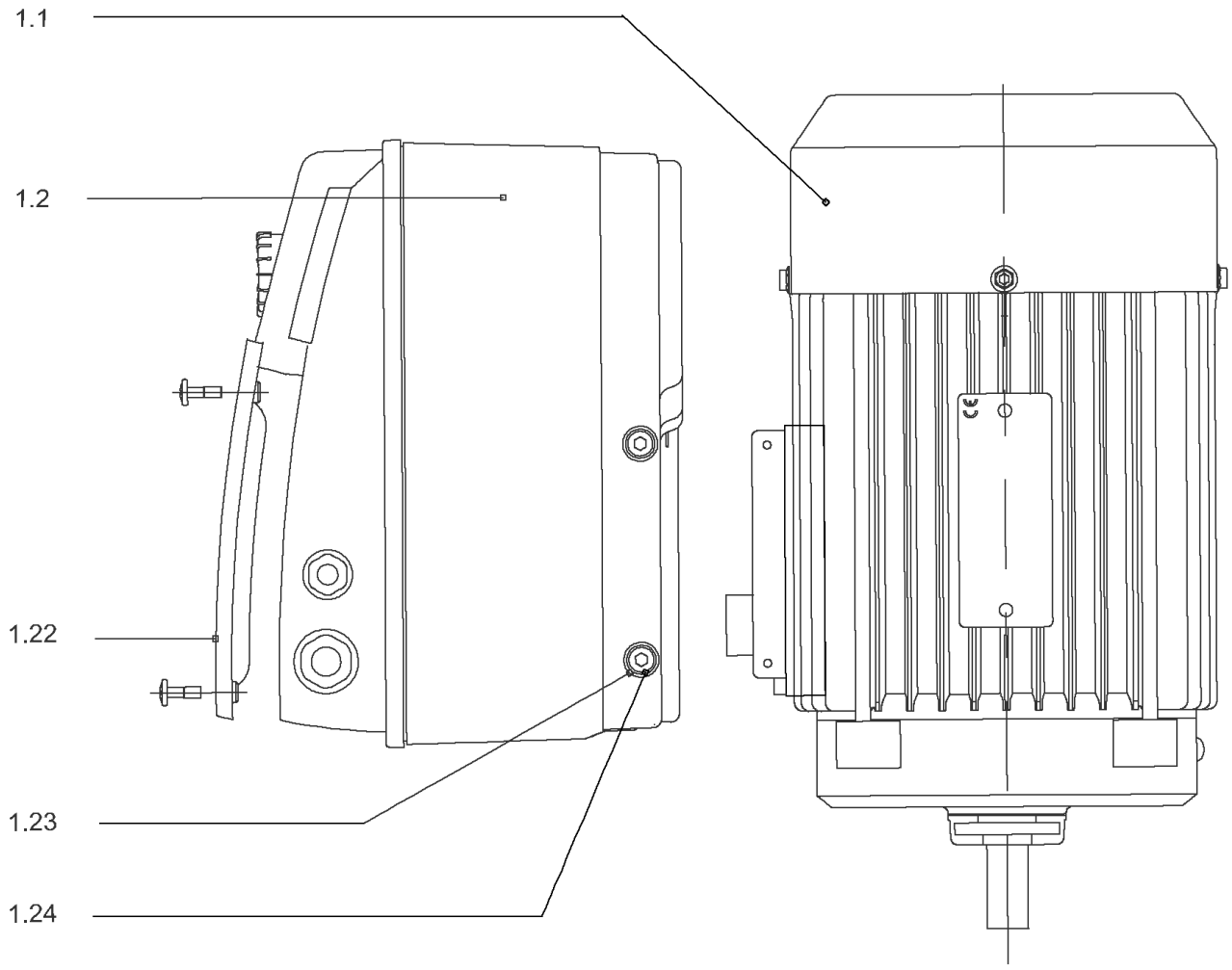
1.1
1.2
1.22
1.23
1.24

## DRIVE HELIX-VE407-IE2-WE KIT

| Item | Article no. | Description | Quantity |
|---|---|---|---|
| 1.1 | | MOTOR 1,5/2/90 3~ 380V 60HZ IE2 WE VP. | 1 |
| Note: no longer available/nicht mehrlieferbar/n'est plus disponible | | | |
| | | SPARE PARTS MOTOR:ON REQUEST | 1 |
| 1.2 | 4184872 | MODULE HELIX-VE407-IE2-WE KIT | 1 |
| 1.22 | 2054227 | > MODULE COVER/GASKET TL3/4 KIT | 1 |
| 1.23 | 4215716 | > SCREW M5X16 DIN912 8.8 A2A (4pieces) VP. | 1 |
| 1.24 | 2057978 | > RONDELLE A5,3 DIN6797 FST ZN (4 PIECES) | 1 |

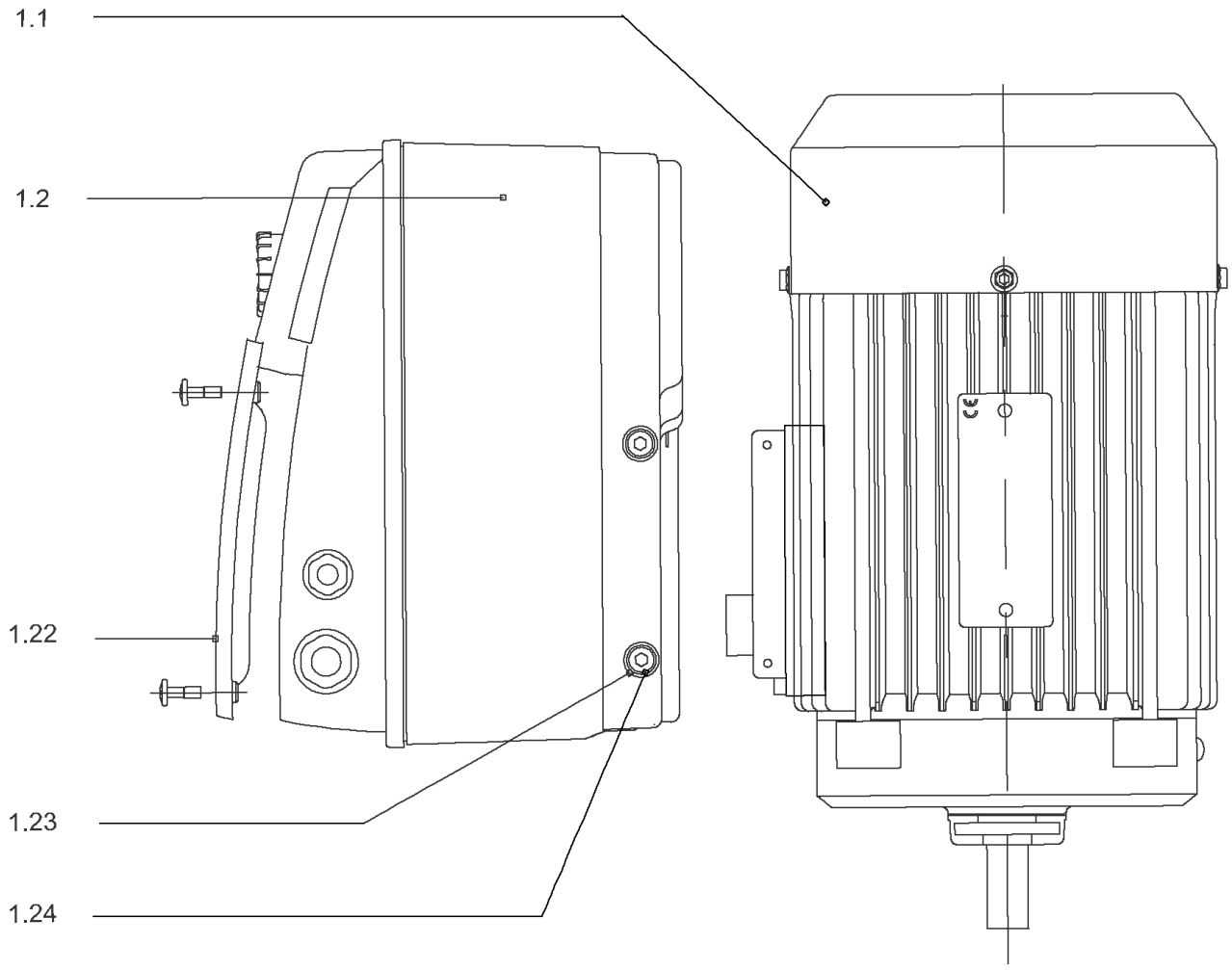
1.1
1.2
1.22
1.23
1.24

## DRIVE HELIX-VE407-IE4-WE KIT

| Item | Article no. | Description | Quantity |
|---|---|---|---|
| 1.1 | 4207918 | MOTOR 1.5/2/90 3~ 380V 60HZ IE4 WE VP. | 1 |
| | | SPARE PARTS MOTOR:ON REQUEST | 1 |
| 1.2 | 4209326 | MODULE HELIX-VE407-IE4-WE KIT | 1 |
| 1.22 | 2054227 | > MODULE COVER/GASKET TL3/4 KIT | 1 |
| 1.23 | 4215716 | > SCREW M5X16 DIN912 8.8 A2A (4pieces) VP. | 1 |
| 1.24 | 2057978 | > RONDELLE A5,3 DIN6797 FST ZN (4 PIECES) | 1 |

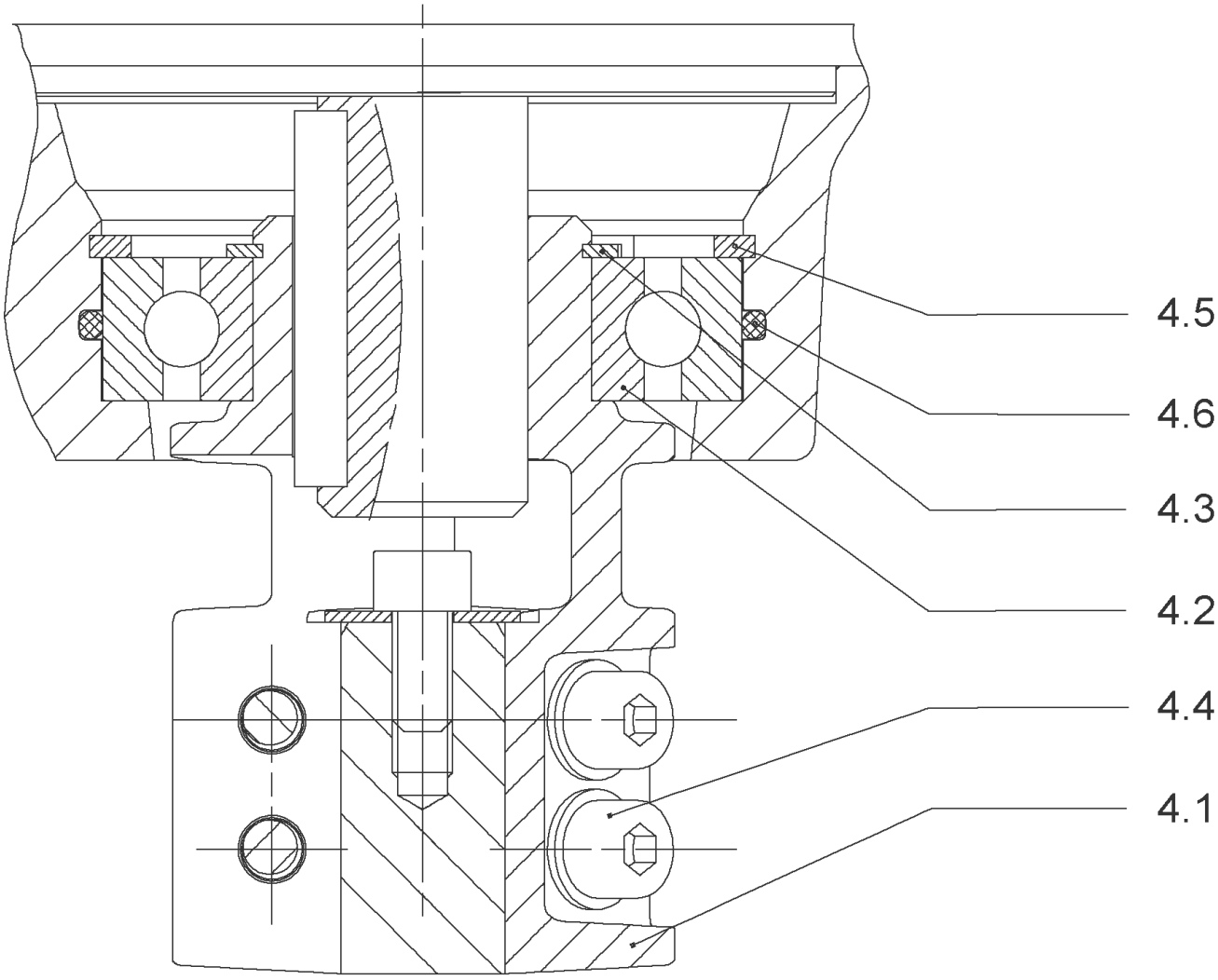
4.5
4.6
4.3
4.2
4.4
4.1

## COUPLING D.12XD.24 FT115 KIT (4178600)

| Item | Article no. | Description | Quantity |
|---|---|---|---|
| 4.1 | | COUPLING-M+ Ø12XØ24-FT115-MACHINED | 1 |
| 4.2 | 2131023 | BALL BEARING 6207/ZZ-C3(HT)VP. | 1 |
| 4.3 | 4234254 | CIRCLIP-FOR-SHAFT-D35x1.5 VP. | 1 |
| 4.4 | 4157726 | SCREW KIT M8X30 (4 PIECES) | 1 |
| 4.5 | 4234251 | CIRCLIP-D72x2.5 VP. | 1 |
| 4.6 | 4234246 | O-RING 72X3 VP. | 1 |
| | | NOMEL CONTACT WASHER 8x16x1,4 STEEL ZC | 1 |

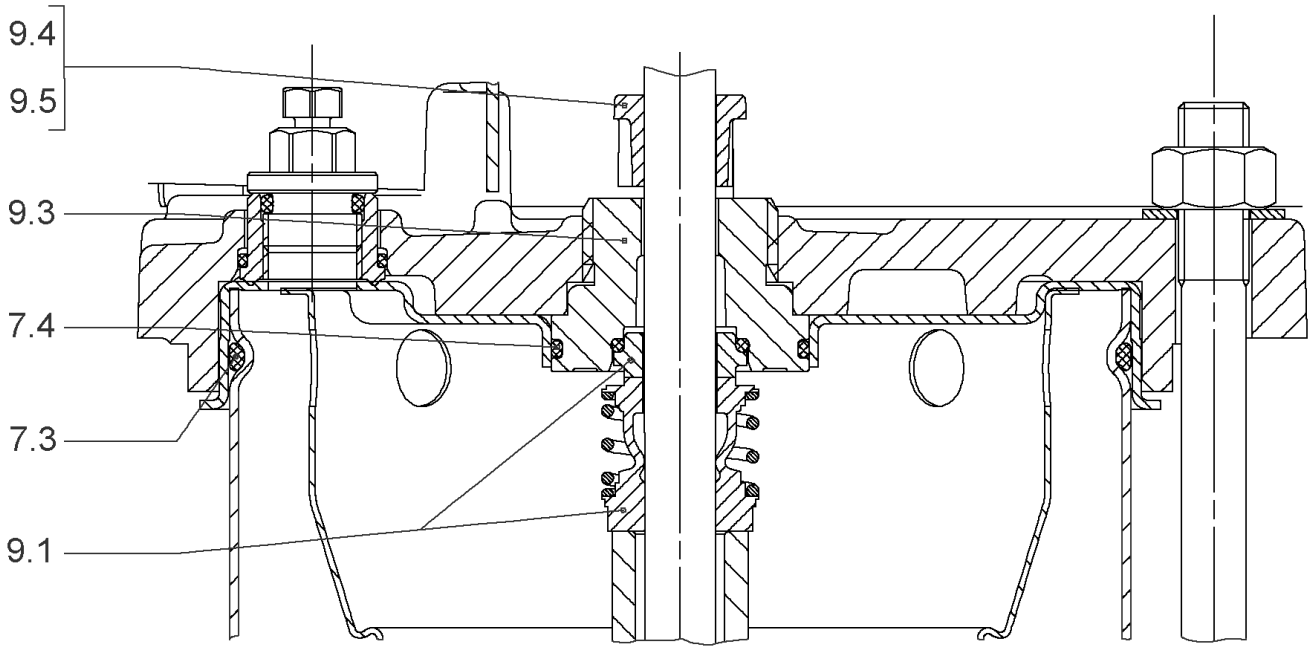
9.4
9.5
9.3
7.4
7.3
9.1

## SEAL-KIT-HELIX2-4 O/E KIT (4178564)

| Item | Article no. | Description | Quantity |
|---|---|---|---|
| 7.3 | 4176513 | O-RING FOR PUMP JACKET VP. | 1 |
| 7.4 | 2127603 | O-RING ID.37,6x2,4 EPDM VP. | 1 |
| 9.1 | 4178563 | M.SEAL.HELIX2-4 O/E VP. | 1 |
| 9.3 | 4178561 | RING HOLDER Ø22 1.4301 VP. | 1 |
| 9.5 | 4178562 | DRIVE RING D.22/12.2X10 MACH.VP. | 1 |
| 9.4 | 4176520 | SCREW CH M5x5 A4-70 ( 3PIECES ) | 1 |

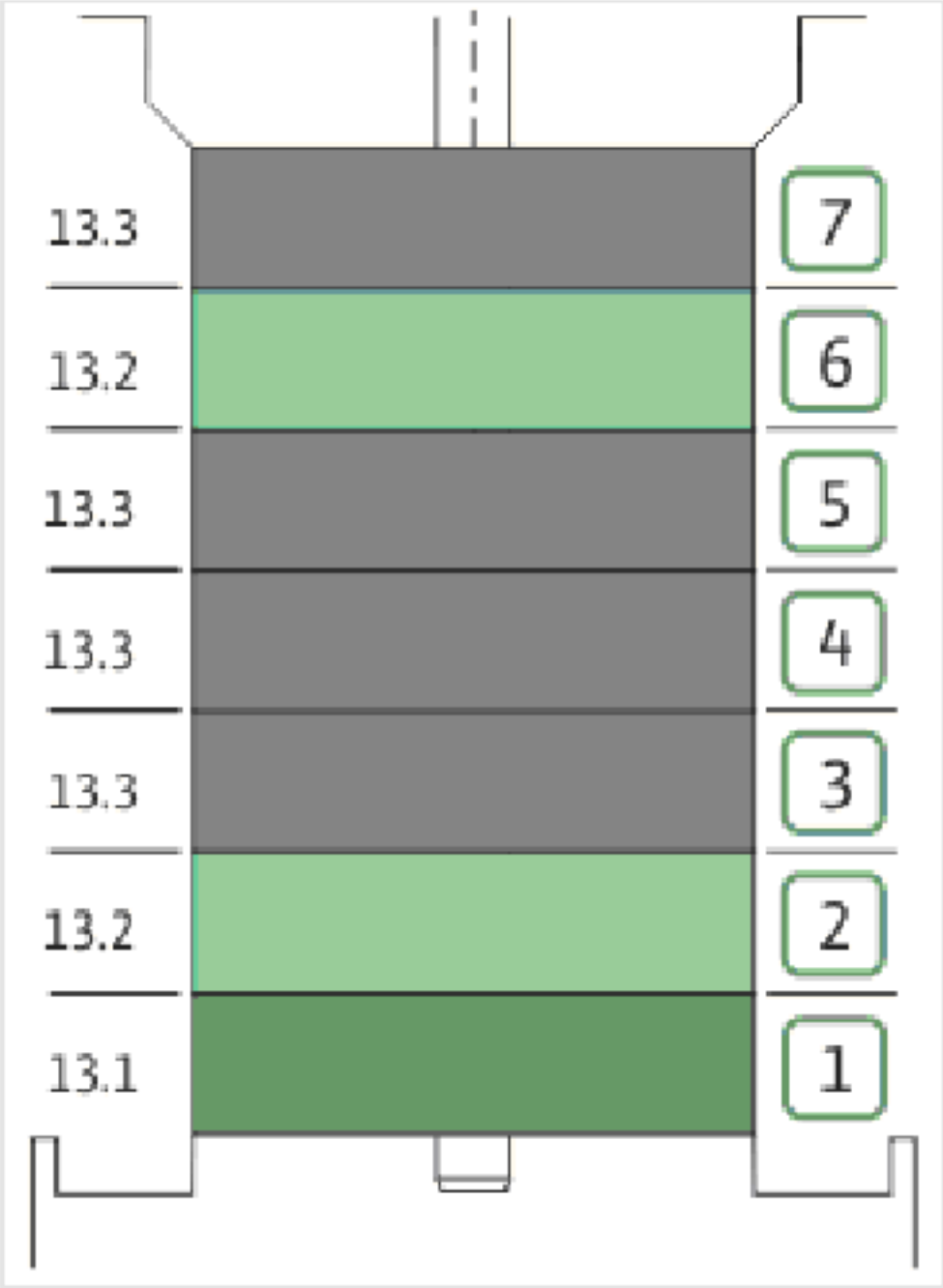
13.3
13.2
13.3
13.3
13.3
13.2
13.1
7
6
5
4
3
2
1

| Item | Article no. | Description | Quantity |
|---|---|---|---|
| 13.1 | 4178570 | STAGE HELIX 4 1.4301 KIT | 1 |
| | | > MACH.STG-CASING-WOGV-WNR-M+2-4-304 | 1 |
| | | > IMPELLER-M+4-304 | 1 |
| 13.2 | 4178569 | STAGE BEARING HELIX 4 1.4301 KIT | 1 |
| | | > MACH.BEARING-STG-CASING-WNR-M+4-304 | 1 |
| | | > IMPELLER-M+4-304 | 1 |
| | | > SHAFT SLEEVE SPACER Ø15,35x10,305-304 | 1 |
| | | > SHAFT-SLEEVE-D12xD16x14-CW | 1 |
| 13.3 | 4178574 | INTER STAGE HELIX4 1.4301< 15 stages KIT | 1 |
| | | > MACH.STD-STG-CASING-WGV+NR-M+4-304 | 1 |
| | | > IMPELLER-M+4-304 | 1 |
| | | > IMPELLER SPACER Ø12,05X14,85-L24,285-304 | 1 |

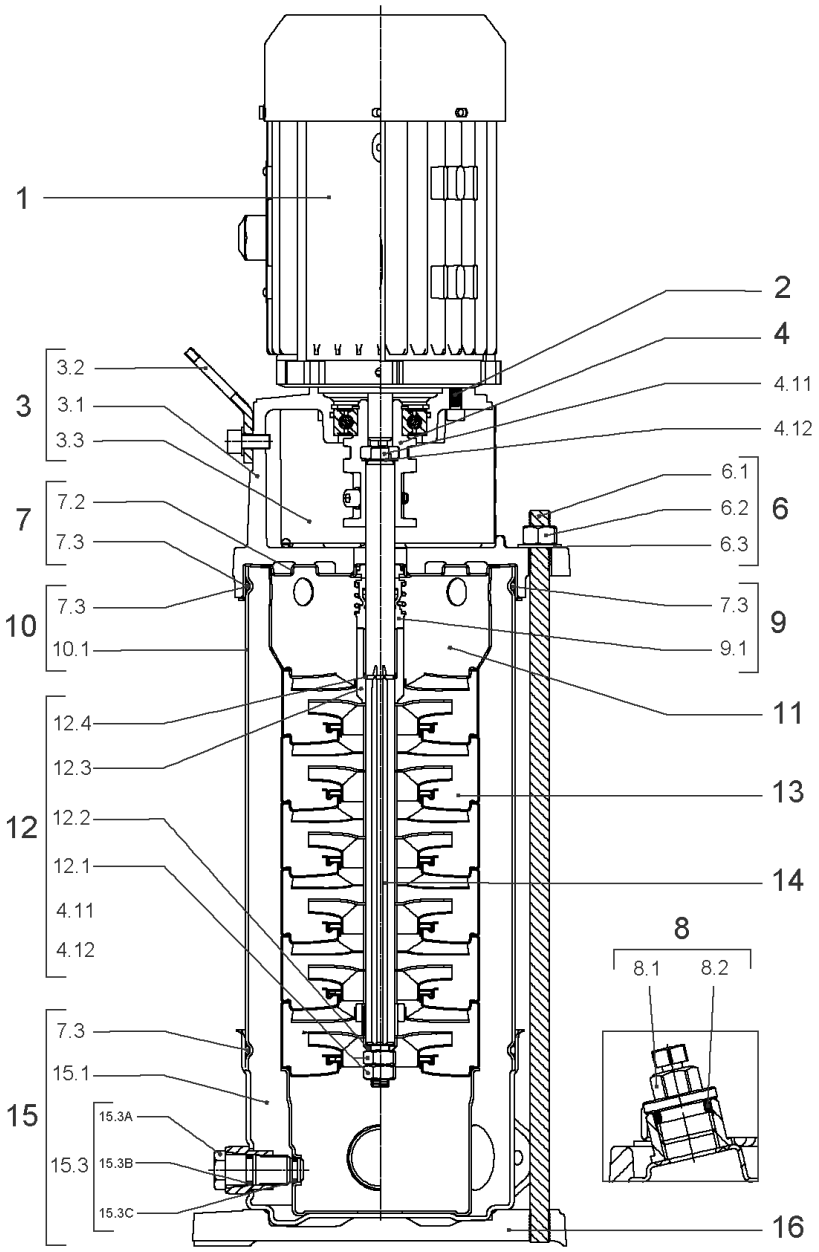
1
2
4
4.11
4.12
3
3.2
3.1
3.3
7
7.2
7.3
6
6.1
6.2
6.3
10
7.3
10.1
9
7.3
9.1
11
12
12.4
12.3
12.2
12.1
4.11
4.12
13
14
8
8.1
8.2
15
7.3
15.1
15.3
15.3A
15.3B
15.3C
16

## HELIX VE407-1/16/E/S (4201573)

| Item | Article no. | Description | Quantity |
|---|---|---|---|
| 1 | | DRIVE HELIX-VE407-IE4-WE KIT | 1 |
| Note: MOTOR BRAND WILO ELEC | | | |
| | | SPARE PARTS MOTOR:ON REQUEST | 1 |
| 2 | 4159707 | SCREW M8X30 (4 PIECES) | 1 |
| 3 | 4213784 | LANTERN FT115 HELIX KIT | 1 |
| 3.1 | | > LANT-MOT-VMI-ReDTC6"-FT115-MACHINED+CATA | 1 |
| 3.2 | 4184852 | > EYELET CPL.FT HELIX (2 PIECES) | 1 |
| 3.3 | 4213782 | > COUPLING PROTECTOR FT115/130 HELIX KIT | 1 |
| 4 | 4178600 | COUPLING D.12XD.24 FT115 KIT | 1 |
| 6 | 4178585 | STUD BOLT M12X365 KIT | 1 |
| 6.1 | | > TIE BOLT M12-365x18x30-1.4057 | 1 |
| 6.2 | 2094647 | > NUT M12 M12 ISO4032 VP. | 1 |
| 6.3 | 2123557 | > WASHER CS-12.4-24-1.6-NFE25 (4 PIECES) | 1 |
| 7 | 4212722 | STATIONARY RING HOLDER HELIX D23 ReDTC | 1 |
| 7.2 | 4212720 | > STATIONARY RING HOLDER HELIX D23 VP. | 1 |
| 7.3 | 4176513 | > O-RING FOR PUMP JACKET VP. | 1 |
| 8 | 4212724 | FILING/PURGING PLUG HELIX ReDTC KIT | 1 |
| 8.1 | | > FILLING PLUG MVI6"-304 | 1 |
| 8.2 | 4177800 | > O-RING EPDM PLUG HELIX VP. | 1 |
| 9 | 4212726 | MECH.SEAL HELIX V2/4 O/E ReDTC KIT | 1 |
| 9.1 | 4178563 | > M.SEAL.HELIX2-4 O/E VP. | 1 |
| 7.3 | 4176513 | > O-RING FOR PUMP JACKET VP. | 1 |
| 10 | 4178586 | HOUSING-PIPE D.152X235 1.4301 KIT | 1 |
| 7.3 | 4176513 | > O-RING FOR PUMP JACKET VP. | 1 |
| 10.1 | | > HOUSING-PIPE Ø152-M+207/407-304 | 1 |
| 11 | 4178566 | CENTERING STAGE-RETURN HELIX4 1.4307 VP | 1 |
| 12 | 4212729 | SHAFT EQUIPMENT HELIX V2/4 ReDTC KIT | 1 |
| 12.1 | | > NUT-H-M8-STAINLESS-STEEL A4-70 | 1 |
| 12.2 | | > SHAFT END WASHER Ø8/Ø12 316L | 1 |
| 12.3 | | > 1/2-SNAP-RING-2/4M3-316L | 1 |
| 12.4 | | > STOP-RUSH-1/2-D12xd2-M+316 | 1 |
| 4.11 | | > SCREW CHC-M6X14-8.8-ISO4762-GEOMET500A | 1 |
| 4.12 | | > WASHER D.24 L6U ZINK | 1 |
| 13 | | HYDRAULIC HELIX V 407 1.4307 | 1 |

| Item | Article no. | Description | Quantity |
|---|---|---|---|
| 14 | 4213750 | SHAFT D.12X306 HELIX 1.4057 VP. | 1 |
| 15 | 4174079 | PUMP HOUSING HELIX DN32 PN16 1.4301 KIT | 1 |
| 7.3 | 4176513 | > O-RING FOR PUMP JACKET VP. | 1 |
| 15.1 | | > BLASTING PPE HOUSING V-PN16-DN32-5"-304 | 1 |
| 15.2 | 4217889 | > COUNTER FLANGE-G1"-PN16-GJL KIT | 1 |
| 15.3 | 4171321 | > PRIMING/DRAIN PLUG EPDM HELIX KIT | 1 |
| 16 | 4177964 | BASEPLATE HELIX V2/4/6 PN16 VP. | 1 |

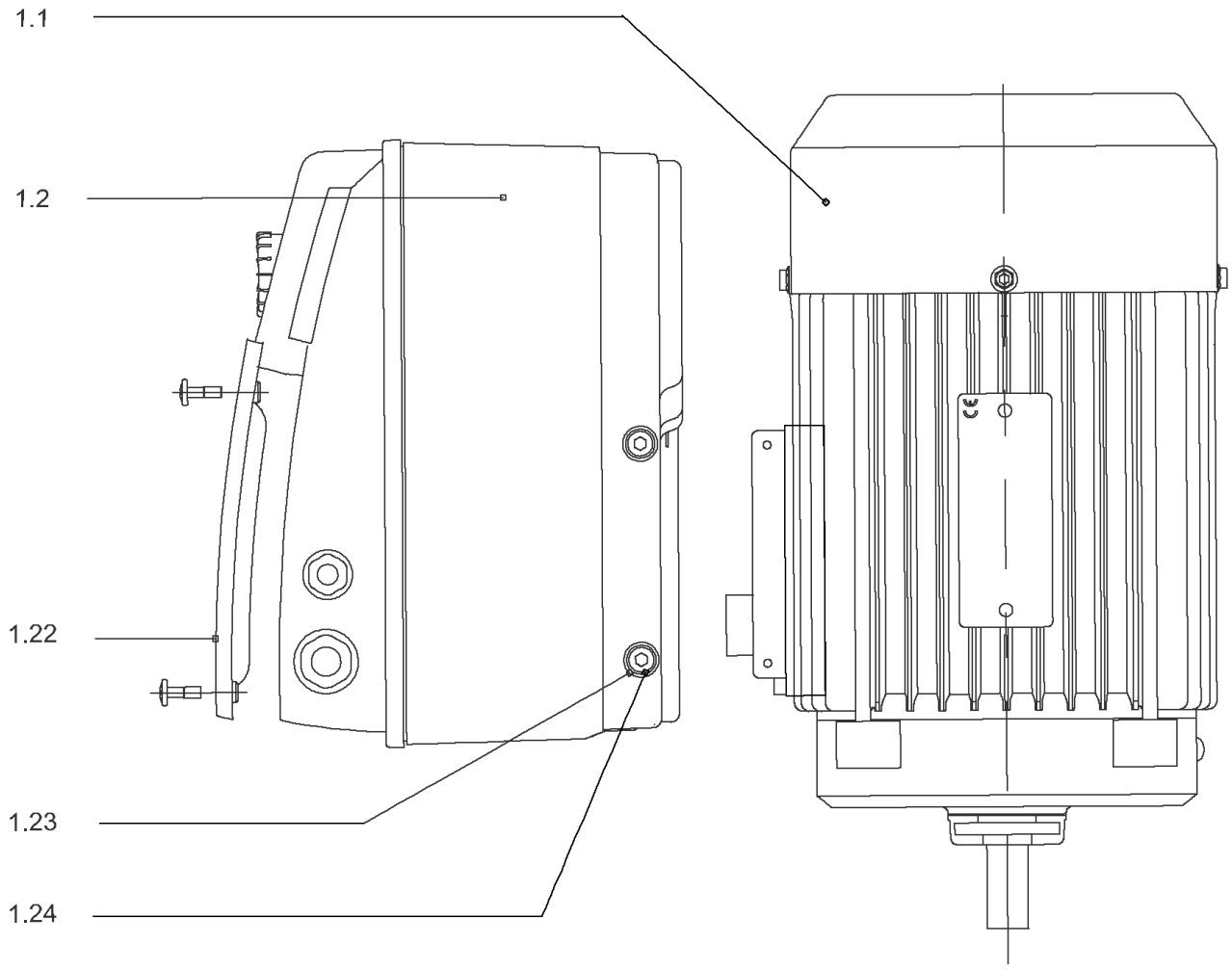
1.1
1.2
1.22
1.23
1.24

## DRIVE HELIX-VE407-IE4-WE KIT

| Item | Article no. | Description | Quantity |
|---|---|---|---|
| 1.1 | 4207918 | MOTOR 1.5/2/90 3~ 380V 60HZ IE4 WE VP. | 1 |
| | | SPARE PARTS MOTOR:ON REQUEST | 1 |
| 1.2 | 4209326 | MODULE HELIX-VE407-IE4-WE KIT | 1 |
| 1.22 | 2054227 | > MODULE COVER/GASKET TL3/4 KIT | 1 |
| 1.23 | 4215716 | > SCREW M5X16 DIN912 8.8 A2A (4pieces) VP. | 1 |
| 1.24 | 2057978 | > RONDELLE A5,3 DIN6797 FST ZN (4 PIECES) | 1 |

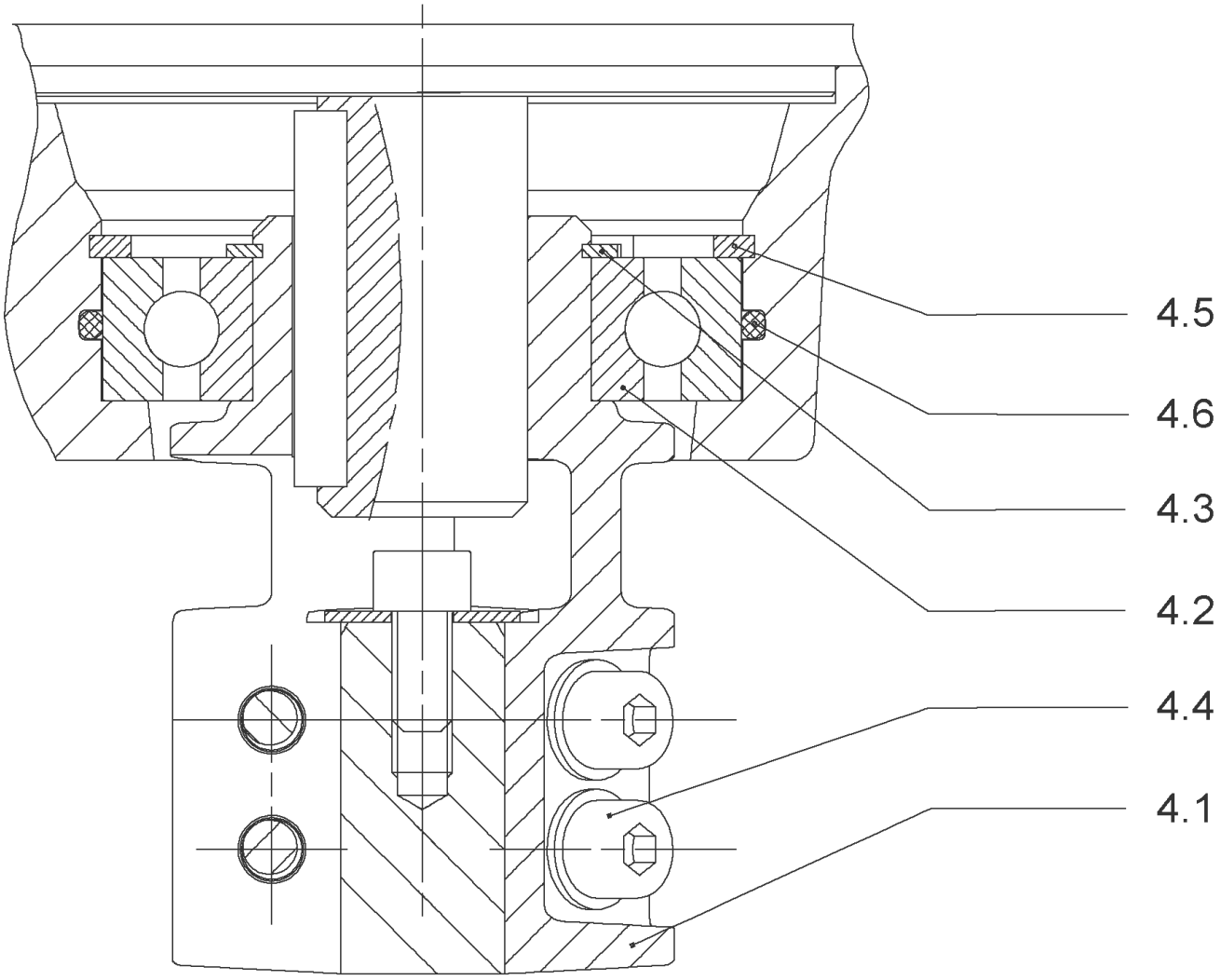
4.5
4.6
4.3
4.2
4.4
4.1

## COUPLING D.12XD.24 FT115 KIT (4178600)

| Item | Article no. | Description | Quantity |
|---|---|---|---|
| 4.1 | | COUPLING-M+ Ø12XØ24-FT115-MACHINED | 1 |
| 4.2 | 2131023 | BALL BEARING 6207/ZZ-C3(HT)VP. | 1 |
| 4.3 | 4234254 | CIRCLIP-FOR-SHAFT-D35x1.5 VP. | 1 |
| 4.4 | 4157726 | SCREW KIT M8X30 (4 PIECES) | 1 |
| 4.5 | 4234251 | CIRCLIP-D72x2.5 VP. | 1 |
| 4.6 | 4234246 | O-RING 72X3 VP. | 1 |
| | | NOMEL CONTACT WASHER 8x16x1,4 STEEL ZC | 1 |

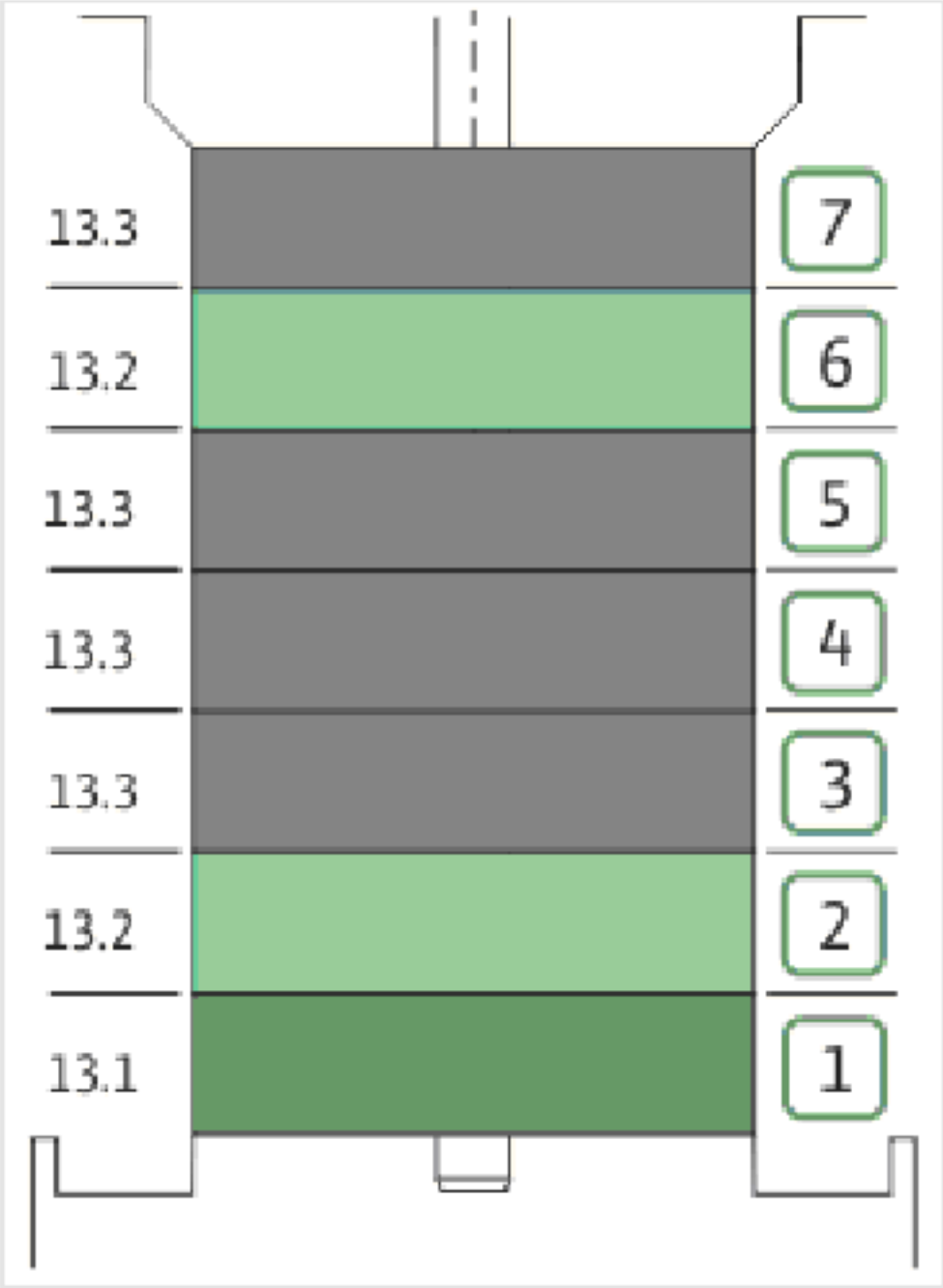
13.3
13.2
13.3
13.3
13.3
13.2
13.1
7
6
5
4
3
2
1

| Item | Article no. | Description | Quantity |
|---|---|---|---|
| 13.1 | 4178570 | STAGE HELIX 4 1.4301 KIT | 1 |
| | | > MACH.STG-CASING-WOGV-WNR-M+2-4-304 | 1 |
| | | > IMPELLER-M+4-304 | 1 |
| 13.2 | 4178569 | STAGE BEARING HELIX 4 1.4301 KIT | 1 |
| | | > MACH.BEARING-STG-CASING-WNR-M+4-304 | 1 |
| | | > IMPELLER-M+4-304 | 1 |
| | | > SHAFT SLEEVE SPACER Ø15,35x10,305-304 | 1 |
| | | > SHAFT-SLEEVE-D12xD16x14-CW | 1 |
| 13.3 | 4178574 | INTER STAGE HELIX4 1.4301< 15 stages KIT | 1 |
| | | > MACH.STD-STG-CASING-WGV+NR-M+4-304 | 1 |
| | | > IMPELLER-M+4-304 | 1 |
| | | > IMPELLER SPACER Ø12,05X14,85-L24,285-304 | 1 |

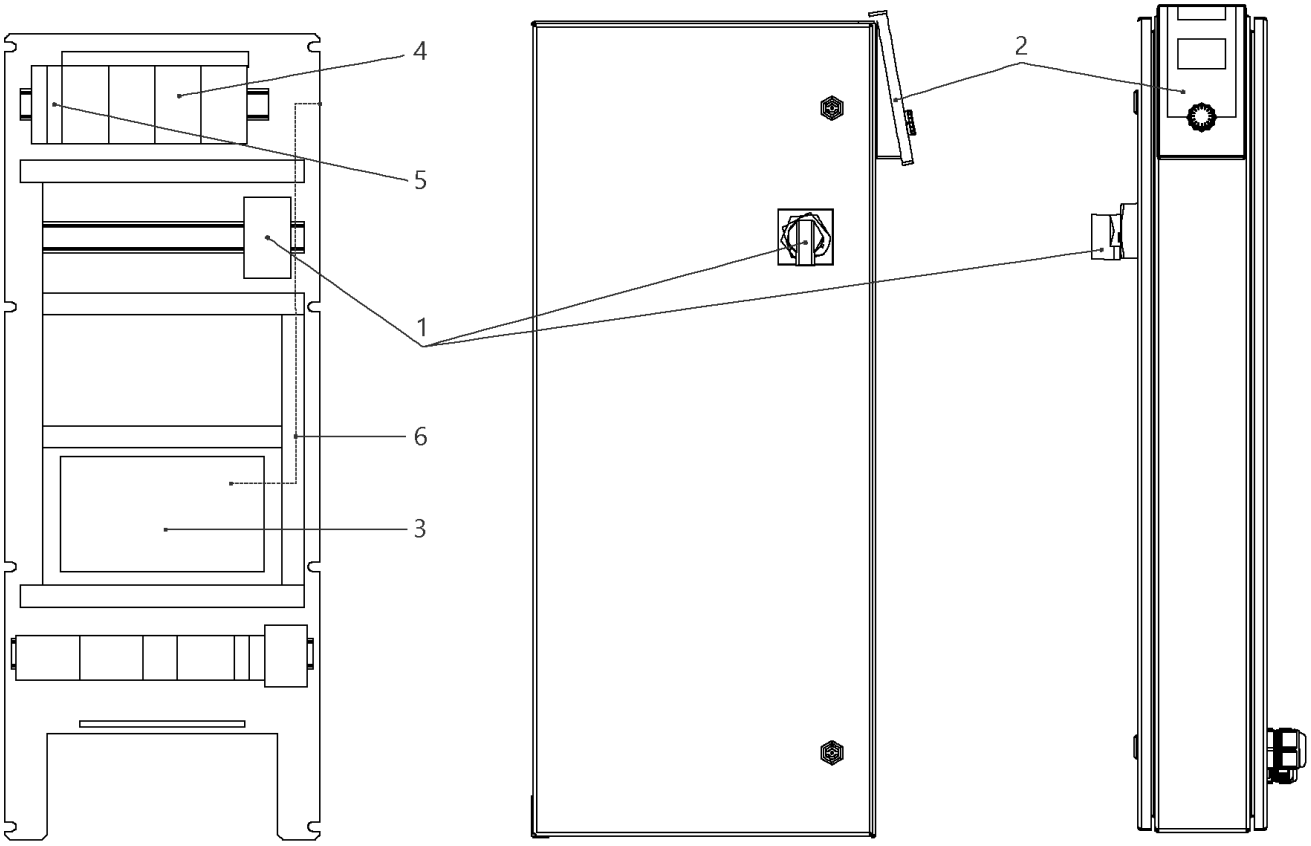
4
5
1
6
3
2

## W-CTRL-SCE-B-2x0,55-1,5KW-T4-FM-ND1

| Item | Article no. | Description | Quantity |
|---|---|---|---|
| 1 | 2104470 | MAIN SWITCH OT40F3 L250 KIT | 1 |
| 2 | 4184784 | CONTROL PANEL HMI SC KIT | 1 |
| 2 | 4185259 | ASSEMBLY DISPLAY SC PKG VP. | 1 |
| 3 | 4185257 | ASSEMBLY CPU SCe Booster VP. | 1 |
| 4 | 2051217 | AUTOM.CIRCUIT BREAKER S203 B16 TO7,5kW | 1 |
| 5 | 2046288 | CIRCUIT BREAKER S201 B16 | 1 |
| 6 | 4197081 | CABLE RJ45 CAT6 0,5M RED SC-PANEL VP. | 1 |

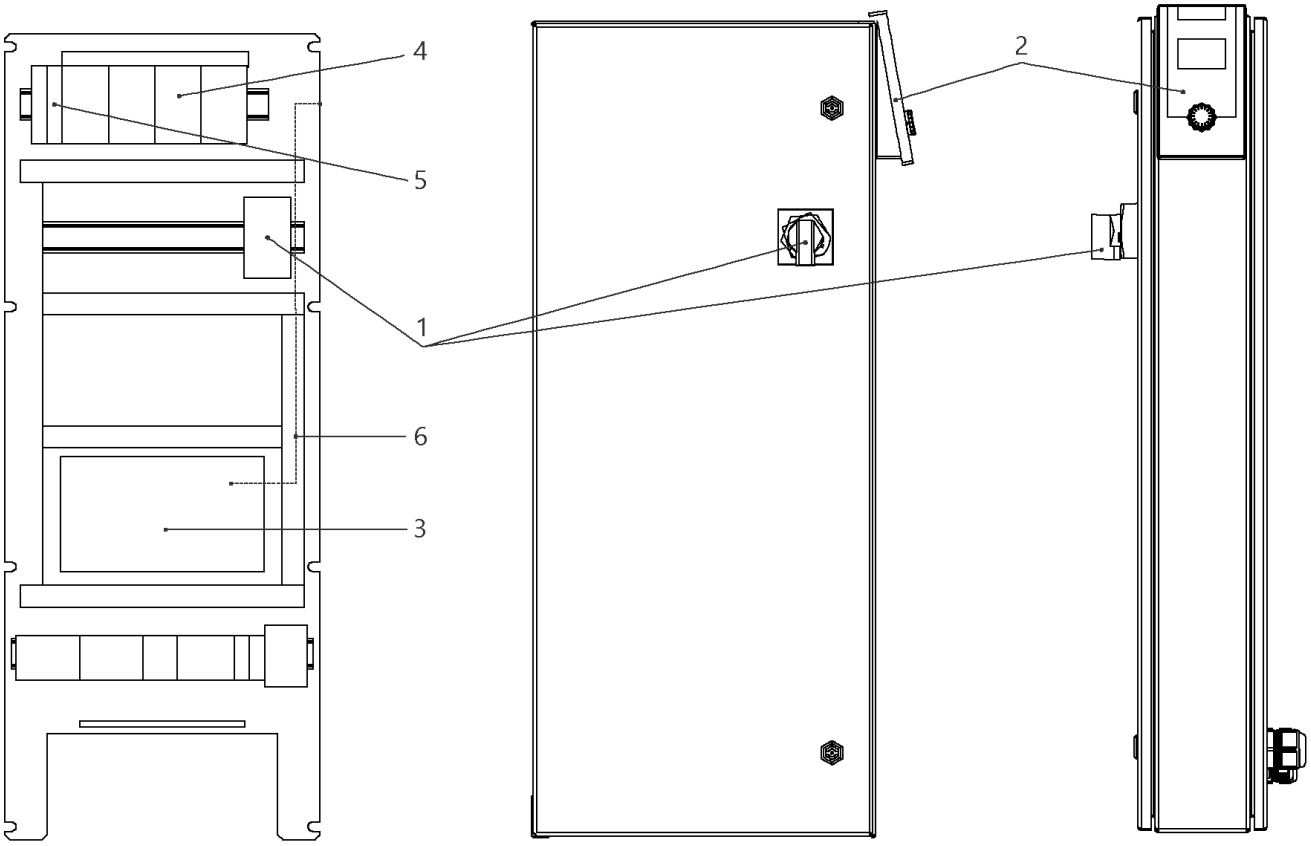
4
5
1
6
3
2

## W-CTRL-SCE-B-2x10A-T34-FM-ND1-AVC-PKG (2541913)

| Item | Article no. | Description | Quantity |
|---|---|---|---|
| 1 | 2104470 | MAIN SWITCH OT40F3 L250 KIT | 1 |
| 2 | 4184784 | CONTROL PANEL HMI SC KIT | 1 |
| 2 | 4185259 | ASSEMBLY DISPLAY SC PKG VP. | 1 |
| Note: DISPLAY ALONE / PLATINE SEULE | | | |
| 3 | 4185257 | ASSEMBLY CPU SCe Booster VP. | 1 |
| 4 | 2119861 | AUTOMATIC CIRCUIT BREAKER S203 B13 3POL. | 1 |
| 5 | 2046288 | CIRCUIT BREAKER S201 B16 | 1 |
| 6 | 4197081 | CABLE RJ45 CAT6 0,5M RED SC-PANEL VP. | 1 |

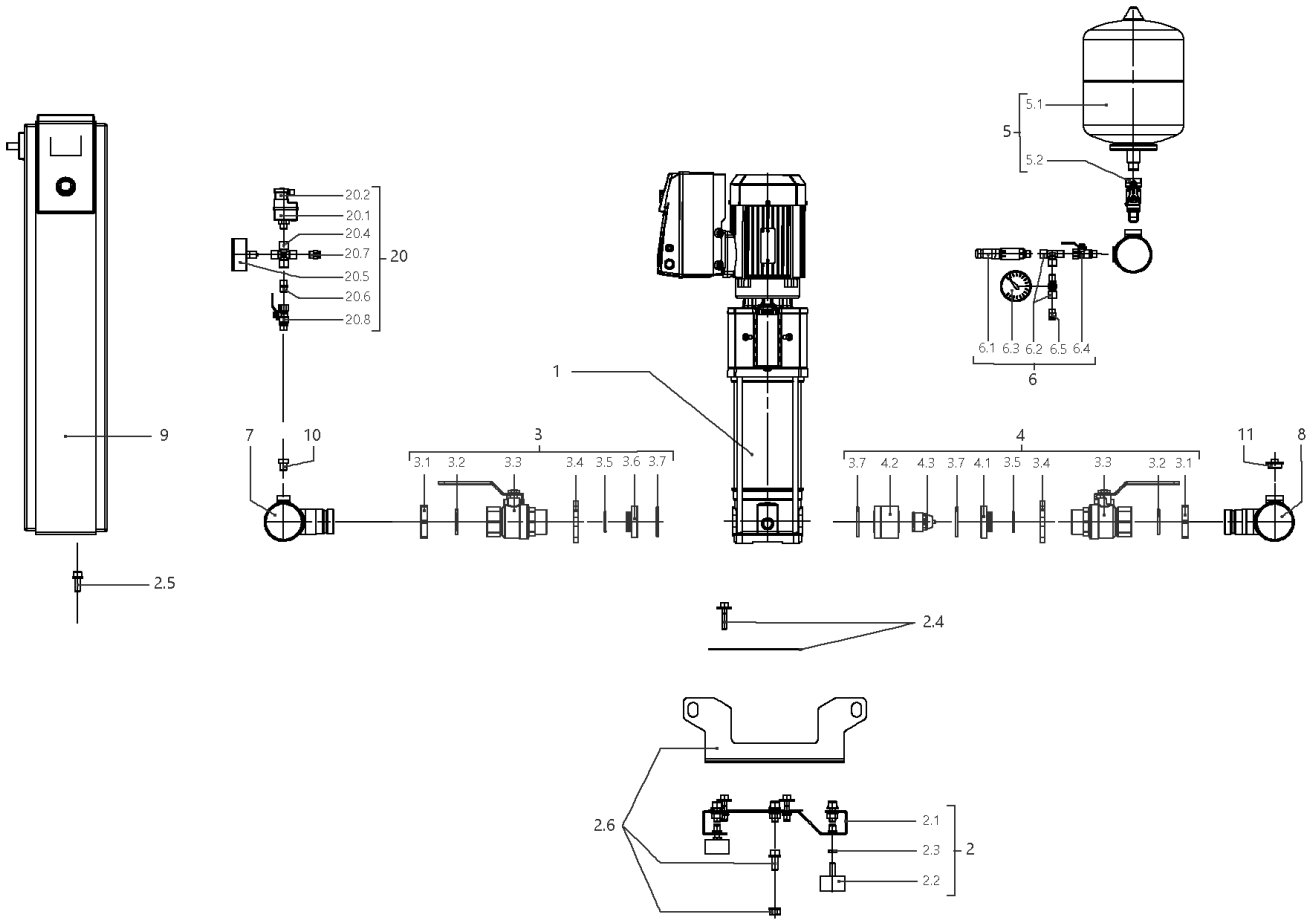
5.1
5
5.2
20.2
20.1
20.4
20.7
20
20.5
20.6
20.8
6.1 6.3 6.2 6.5 6.4
6
1
9
7
10
3
3.1 3.2 3.3 3.4 3.5 3.6 3.7
4
3.7 4.2 4.3 3.7 4.1 3.5 3.4 3.3 3.2 3.1
11
8
2.5
2.4
2.6
2.1
2.3
2
2.2

| Item | Article no. | Description | Quantity |
|---|---|---|---|
| 1 | | HELIX VE410-1/16/E/S | 1 |
| Note: TO / BIS / JUSQU'AU 31/03/2016 | | | |
| 1 | 4201575 | HELIX VE410-1/16/E/S | 1 |
| Note: FROM / AB / À PARTIR DU 01/04/2016 | | | |
| 2 | 4200135 | BASE PLATE DE2 850x420 KIT | 1 |
| Note: TO / BIS / JUSQU'AU 28/02/2013 | | | |
| 2.1 | | > BASEPLATE_2x4/6/10/16V_E300_BOX_150 | 1 |
| 2.2 | 2028654 | > VIBRATION DAMPER D.50X30 M10X28 | 1 |
| 2.3 | 2028281 | > NUT M10 DIN936 (ISO4035) 17H VZ | 1 |
| 2.4 | 4199875 | > HOLDER PUMP Siboost Helix V2/4 KIT | 1 |
| 2.5 | 4197084 | > HOLDER SWITCHBOX WILO Smart Control KIT | 1 |
| 2.6 | 4197117 | > LIFTING Siboost HELIX SC KIT | 1 |
| 2 | 4199874 | BASE PLATE DE2 850x300 M10 KIT | 1 |
| Note: FROM / AB / À PARTIR DU 01/03/2013 | | | |
| 2.1 | | > BASEPLATE_2x4/6/10V_E300_850x300_BOX_150 | 1 |
| 2.2 | 2028654 | > VIBRATION DAMPER D.50X30 M10X28 | 1 |
| 2.3 | 2028281 | > NUT M10 DIN936 (ISO4035) 17H VZ | 1 |
| 2.4 | 4199875 | > HOLDER PUMP Siboost Helix V2/4 KIT | 1 |
| 2.5 | 4197084 | > HOLDER SWITCHBOX WILO Smart Control KIT | 1 |
| 2.6 | 4197085 | > LIFTING Siboost HELIX SC KIT | 1 |
| 3 | 4199876 | SUCTION SIDE Siboost Helix V2/4/6 KIT | 1 |
| 3.1 | 2032610 | > NUT G11/4 MS VP. | 1 |
| 3.2 | 2032611 | > O-RING ID.36,09X3,53N DIN3771 E7502 | 1 |
| 3.3 | 2507646 | > BALL VALVE G11/4"M-F-W.HANDLE 1/4-TURN | 1 |
| 3.4 | 2032613 | > SCREWED FLANGE G1 1/4" LK-75 ST37VZ | 1 |
| 3.5 | 2032614 | > O-RING ID.29,82X2,62N DIN3771 E7502 | 1 |
| 3.6 | 2032615 | > SPACER F.I/A KUH.DN32 CUZN | 1 |
| 3.7 | 2032616 | > O-RING ID.44X3,53N DIN3771 E7502 | 1 |
| 4 | 4199877 | DELIVERY SIDE Siboost Helix V2/4/6 KIT | 1 |
| 3.1 | 2032610 | > NUT G11/4 MS VP. | 1 |
| 3.2 | 2032611 | > O-RING ID.36,09X3,53N DIN3771 E7502 | 1 |
| 3.3 | 2507646 | > BALL VALVE G11/4"M-F-W.HANDLE 1/4-TURN | 1 |
| 3.4 | 2032613 | > SCREWED FLANGE G1 1/4" LK-75 ST37VZ | 1 |
| 3.5 | 2032614 | > O-RING ID.29,82X2,62N DIN3771 E7502 | 1 |

| Item | Article no. | Description | Quantity |
|---|---|---|---|
| 4.1 | 2058116 | > SPACER F.I/A KUH.DN32 CUZN | 1 |
| 3.7 | 2032616 | > O-RING ID.44X3,53N DIN3771 E7502 | 1 |
| 4.2 | 2058115 | > HOUSING RFV(RV-IN) DN32 SGS/DRS | 1 |
| 4.3 | 2027870 | > NON-RETURN-DEVICE INSERT DN32(MTR) | 1 |
| 5 | 2032642 | DIAPHREM TANK 8L/PN16 DIN4807/T5 KIT | 1 |
| 5.1 | 2045914 | > DIAPHREM TANK 8L TYP-DD 16BAR | 1 |
| 5.2 | 2027853 | > FLOW FITTING G3/4 FOR DIAPHRAGM VES. | 1 |
| 6 | 4197076 | PRESSURE SENSOR/ GAUGE 0-16BAR KIT | 1 |
| 6.1 | 2085909 | > PRESS.SENSOR 1/4" 0-16BAR 4-20MA VP. | 1 |
| 6.2 | 4197077 | > T-PIECE 1/4" VP. | 1 |
| 6.3 | 2028692 | > PRESSURE GAUGE NG63-PN16-G1/4 | 1 |
| 6.4 | 2028291 | > BALL TAP R1/4" PN42 GIACOMINI R254DL | 1 |
| 6.5 | 2028691 | > BLOWGUN 1/4" MS 30BAR VP. | 1 |
| 7 | 4199878 | PIPE DE2 11/2''-2x11/4"+1x1/4x600 VP. | 1 |
| 8 | 4199879 | PIPE DE2 11/2''-2x11/4"+1x1/4+1x3/4x600 | 1 |
| 9 | | W-CTRL-SCE-B-2x2,2KW-T4-FM-ND2 | 1 |
| Note: TO / BIS / JUSQU'AU 28/02/2013 | | | |
| 9 | | W-CTRL-SCE-B-2x2,2-3,0KW-T4-FM-ND1 | 1 |
| Note: FROM / AB / À PARTIR DU 01/03/2013 - TO / BIS / JUSQU'AU 18/05/2014 | | | |
| 9 | 2541913 | W-CTRL-SCE-B-2x10A-T34-FM-ND1-AVC-PKG | 1 |
| Note: FROM / AB / À PARTIR DU 19/05/2014 | | | |
| 10 | 4197079 | PLUG G1/4"x10 AISI304 KIT | 1 |
| 11 | 2032654 | PLUG R3/4" MS VIEGA 1751 | 1 |
| 20 | 2521150 | ASSEMBLY WMS. DE-EB. +VP | 1 |
| 20.1 | 2028652 | > PRESSURE SWITCH PS3-ASR 1/(1,3) VP. | 1 |
| 20.2 | 2130983 | > PLUG PS3-415 WITH KABEL 1,5M 2NO VP. | 1 |
| 20.4 | 2028290 | > CROSSPIECE R1/4" MS-NICKEL | 1 |
| 20.5 | 2028687 | > PRESSURE GAUGE NG63 R1/4" HI.0-6BAR | 1 |
| 20.6 | 2054268 | > DUAL NIPPLE G1/4" x G1/4" MS VP. | 1 |
| 20.7 | 2028691 | > BLOWGUN 1/4" MS 30BAR VP. | 1 |
| 20.8 | 2028291 | > BALL TAP R1/4" PN42 GIACOMINI R254DL | 1 |

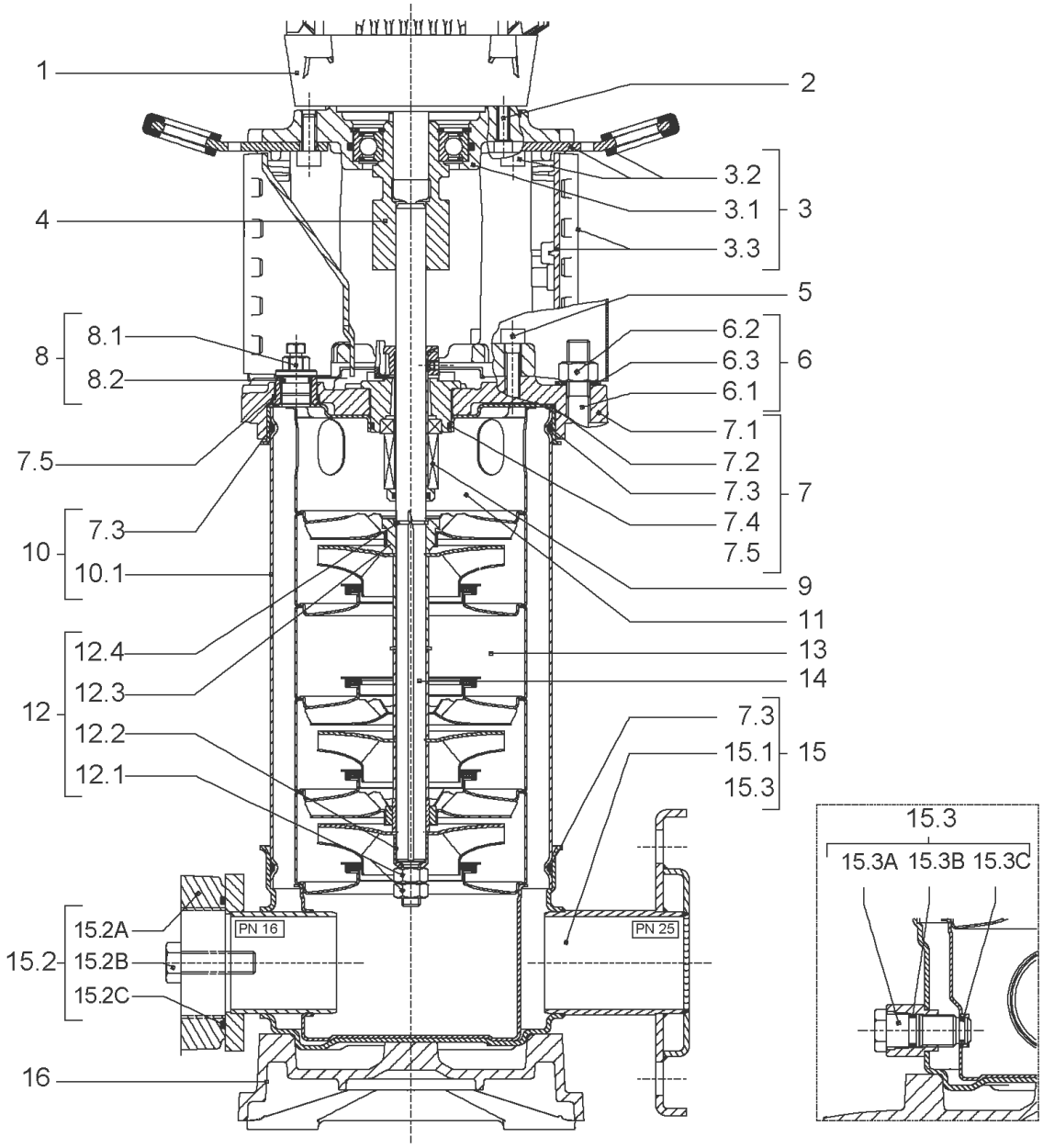
1
2
3.2
3.1
3
3.3
4
5
8.1
8
8.2
6.2
6.3
6
6.1
7.1
7.5
7.2
7.3
7
7.4
7.3
10
7.5
10.1
9
11
12.4
13
12.3
14
12
12.2
7.3
15.1
15
12.1
15.3
15.3
15.3A 15.3B 15.3C
15.2A
PN 16
PN 25
15.2
15.2B
15.2C
16

| Item | Article no. | Description | Quantity |
|---|---|---|---|
| 1 | | DRIVE HELIX-VE410-IE2-WE KIT | 1 |
| Note: MOTOR BRAND WILO ELEC | | | |
| 1 | | DRIVE HELIX-VE410-IE4-WE KIT | 1 |
| Note: MOTOR BRAND WILO ELEC | | | |
| 2 | 4159703 | SCREW M8X40 (4 PIECES) | 1 |
| 3 | 4172795 | LANTERNE FT115 HELIX KIT | 1 |
| 3.1 | | > M+5_6_LANTERN_ONE-PIECE_FT115_CATA | 1 |
| 3.2 | 2127604 | > EYELET CPL.FT HELIX(2 PIECES) | 1 |
| 3.3 | 4159692 | > COUPLING PROTECTOR FT HELIX KIT | 1 |
| 4 | 4178600 | COUPLING D.12XD.24 FT115 KIT | 1 |
| 5 | 4159707 | SCREW M8X30 (4 PIECES) | 1 |
| 6 | 2127554 | STUD BOLT M12X437 KIT | 1 |
| 7 | 4210143 | STATIONARY RING HOLDER HELIX 6" EPDM | 1 |
| 7.2 | 2127607 | > STATIONARY RING HOLDER 6" HELIX 1.4301 V | 1 |
| 7.3 | 4176513 | > O-RING FOR PUMP JACKET VP. | 1 |
| 7.4 | 2127603 | > O-RING ID.37,6x2,4 EPDM VP. | 1 |
| 7.5 | 2127602 | > O-RING ID.21,35x2 EPDM VP. | 1 |
| 8 | 4159686 | FILING/PURGING PLUG HELIX EPDM KIT | 1 |
| 9 | 4178564 | SEAL-KIT-HELIX2-4 O/E KIT | 1 |
| 10 | 2127577 | HOUSING PIPE D.152x310 1.4301 KIT | 1 |
| 11 | 4178566 | CENTERING STAGE-RETURN HELIX4 1.4307 VP | 1 |
| 12 | 4178568 | SHAFT EQUIPMENT HELIX V2/V4 KIT | 1 |
| 12.1 | | > NUT-H-M8-STAINLESS-STEEL A4-70 | 2 |
| 12.2 | | > SHAFT END WASHER Ø8/Ø12 316L | 1 |
| 12.3 | | > STOP COLLAR OF IMPELLER M+2/4 SINGLEBLOC | 1 |
| 12.4 | | > STOP-RUSH-1/2-D12xd2-M+316 | 2 |
| 13 | | HYDRAULIC HELIX V 410 1.4307 | 1 |
| 14 | 4178604 | SHAFT D.12X433 1.4301 VP. | 1 |
| 15 | 4174079 | PUMP HOUSING HELIX DN32 PN16 1.4301 KIT | 1 |
| 7.3 | 4176513 | > O-RING FOR PUMP JACKET VP. | 1 |
| 15.1 | | > BLASTING PPE HOUSING V-PN16-DN32-5"-304 | 1 |
| 15.2 | 4217889 | > COUNTER FLANGE-G1"-PN16-GJL KIT | 1 |
| 15.3 | 4171321 | > PRIMING/DRAIN PLUG EPDM HELIX KIT | 1 |
| 16 | 4177964 | BASEPLATE HELIX V2/4/6 PN16 VP. | 1 |

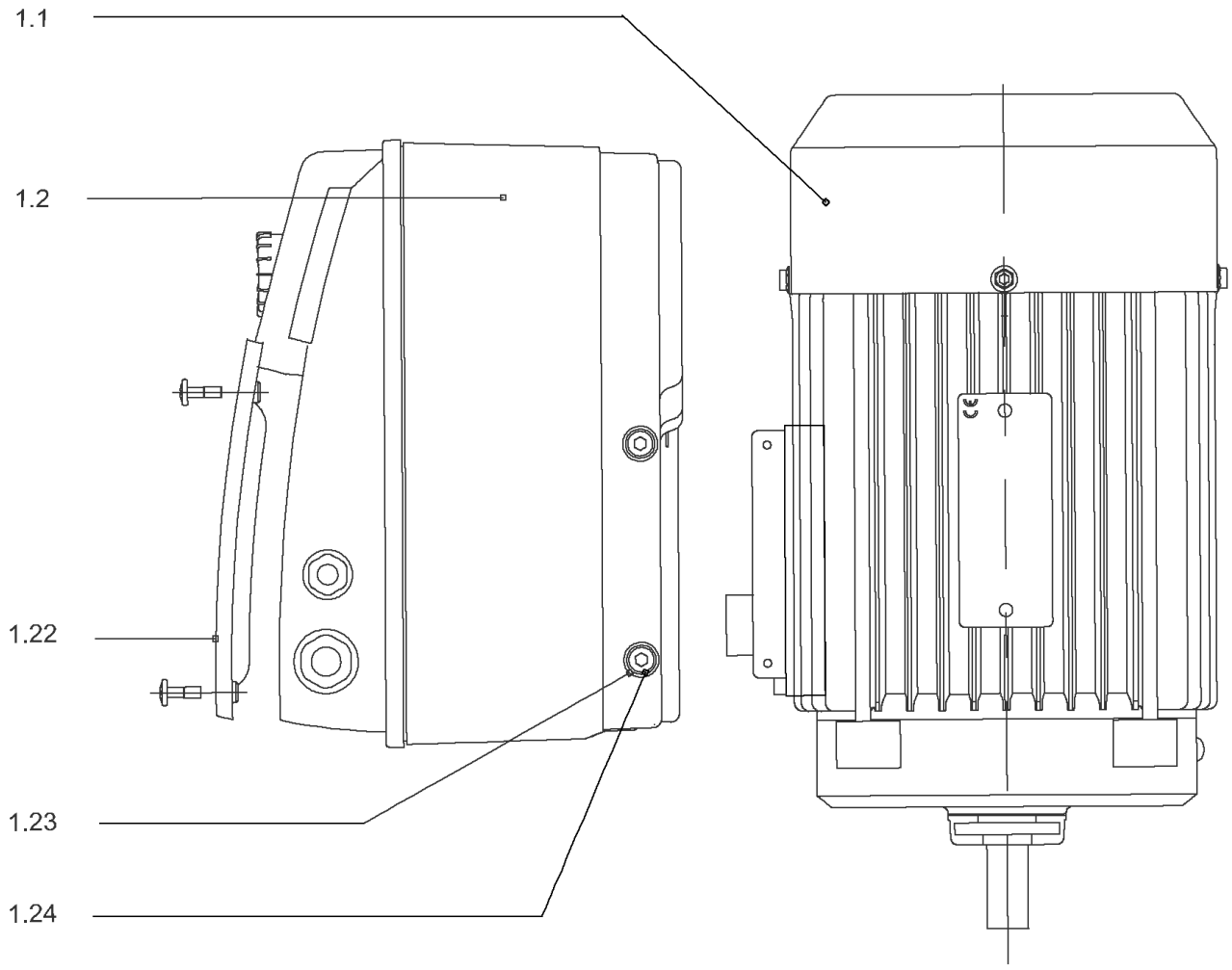
1.1
1.2
1.22
1.23
1.24

## DRIVE HELIX-VE410-IE2-WE KIT

| Item | Article no. | Description | Quantity |
|---|---|---|---|
| 1.1 | 4185016 | MOTOR 2,2/2/90 3~ 380V 60HZ IE2 WE VP. | 1 |
| | | SPARE PARTS MOTOR:ON REQUEST | 1 |
| 1.2 | 4186768 | MODULE HELIX-VE410-IE2-WE KIT | 1 |
| 1.22 | 2054227 | > MODULE COVER/GASKET TL3/4 KIT | 1 |
| 1.23 | 4215716 | > SCREW M5X16 DIN912 8.8 A2A (4pieces) VP. | 1 |
| 1.24 | 2057978 | > RONDELLE A5,3 DIN6797 FST ZN (4 PIECES) | 1 |

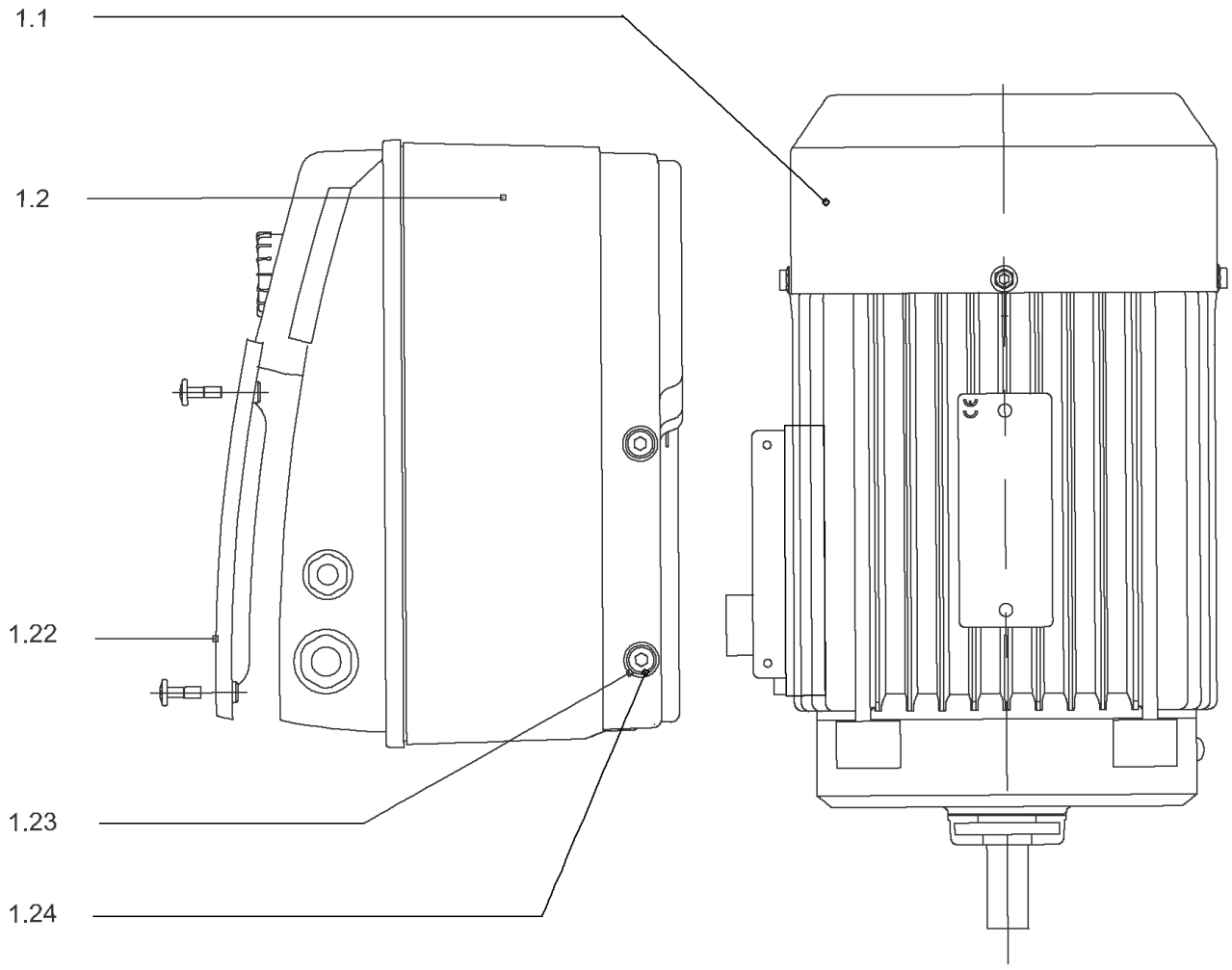
1.1
1.2
1.22
1.23
1.24

## DRIVE HELIX-VE410-IE4-WE KIT

| Item | Article no. | Description | Quantity |
|---|---|---|---|
| 1.1 | 4207920 | MOTOR 2.2/2/90 3~ 380V 60HZ IE4 WE VP. | 1 |
| | | SPARE PARTS MOTOR:ON REQUEST | 1 |
| 1.2 | 4209591 | MODULE HELIX-VE410-IE4-WE KIT | 1 |
| 1.22 | 2054227 | > MODULE COVER/GASKET TL3/4 KIT | 1 |
| 1.23 | 4215716 | > SCREW M5X16 DIN912 8.8 A2A (4pieces) VP. | 1 |
| 1.24 | 2057978 | > RONDELLE A5,3 DIN6797 FST ZN (4 PIECES) | 1 |

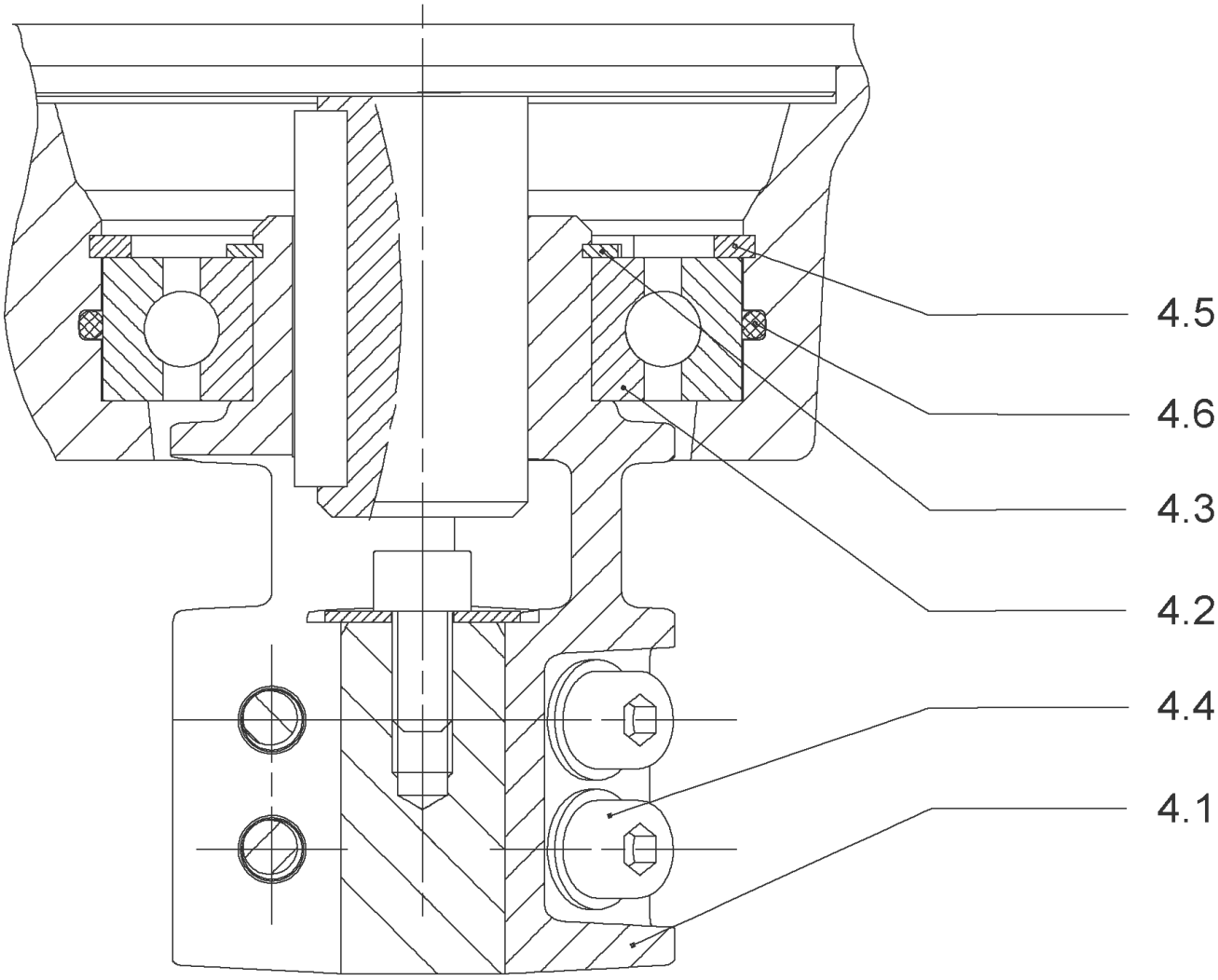
4.5
4.6
4.3
4.2
4.4
4.1

## COUPLING D.12XD.24 FT115 KIT (4178600)

| Item | Article no. | Description | Quantity |
|---|---|---|---|
| 4.1 | | COUPLING-M+ Ø12XØ24-FT115-MACHINED | 1 |
| 4.2 | 2131023 | BALL BEARING 6207/ZZ-C3(HT)VP. | 1 |
| 4.3 | 4234254 | CIRCLIP-FOR-SHAFT-D35x1.5 VP. | 1 |
| 4.4 | 4157726 | SCREW KIT M8X30 (4 PIECES) | 1 |
| 4.5 | 4234251 | CIRCLIP-D72x2.5 VP. | 1 |
| 4.6 | 4234246 | O-RING 72X3 VP. | 1 |
| | | NOMEL CONTACT WASHER 8x16x1,4 STEEL ZC | 1 |

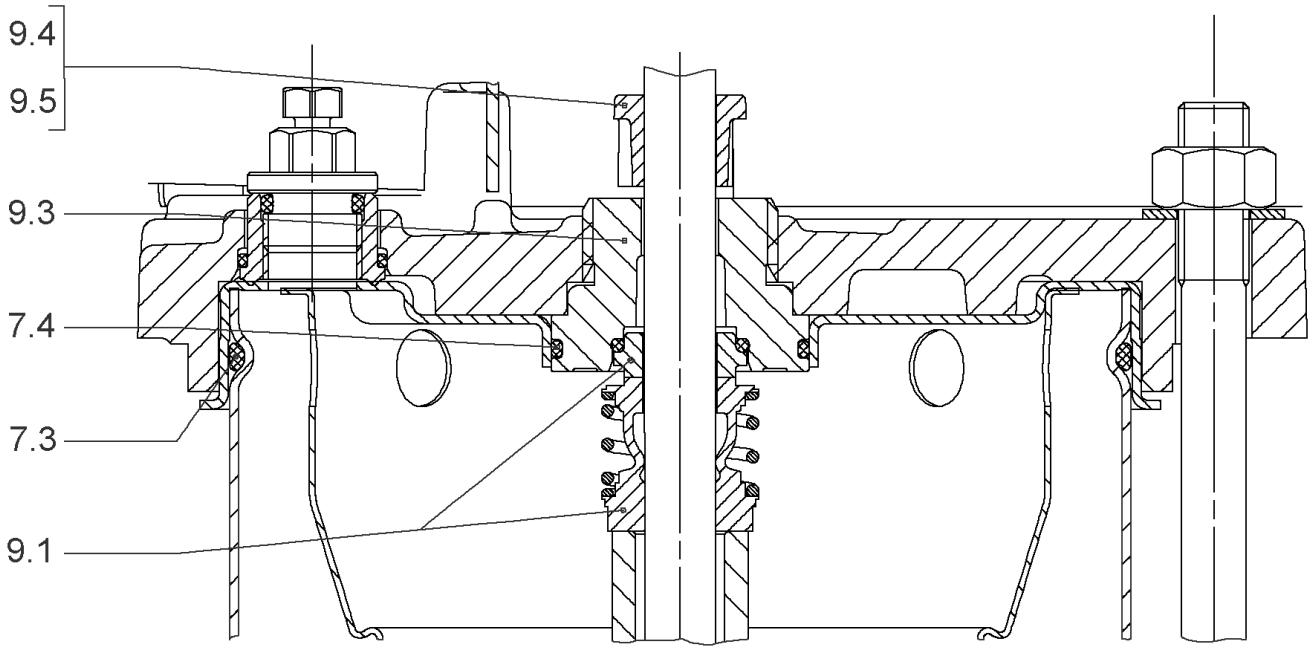
9.4
9.5
9.3
7.4
7.3
9.1

## SEAL-KIT-HELIX2-4 O/E KIT (4178564)

| Item | Article no. | Description | Quantity |
|---|---|---|---|
| 7.3 | 4176513 | O-RING FOR PUMP JACKET VP. | 1 |
| 7.4 | 2127603 | O-RING ID.37,6x2,4 EPDM VP. | 1 |
| 9.1 | 4178563 | M.SEAL.HELIX2-4 O/E VP. | 1 |
| 9.3 | 4178561 | RING HOLDER Ø22 1.4301 VP. | 1 |
| 9.5 | 4178562 | DRIVE RING D.22/12.2X10 MACH.VP. | 1 |
| 9.4 | 4176520 | SCREW CH M5x5 A4-70 ( 3PIECES ) | 1 |

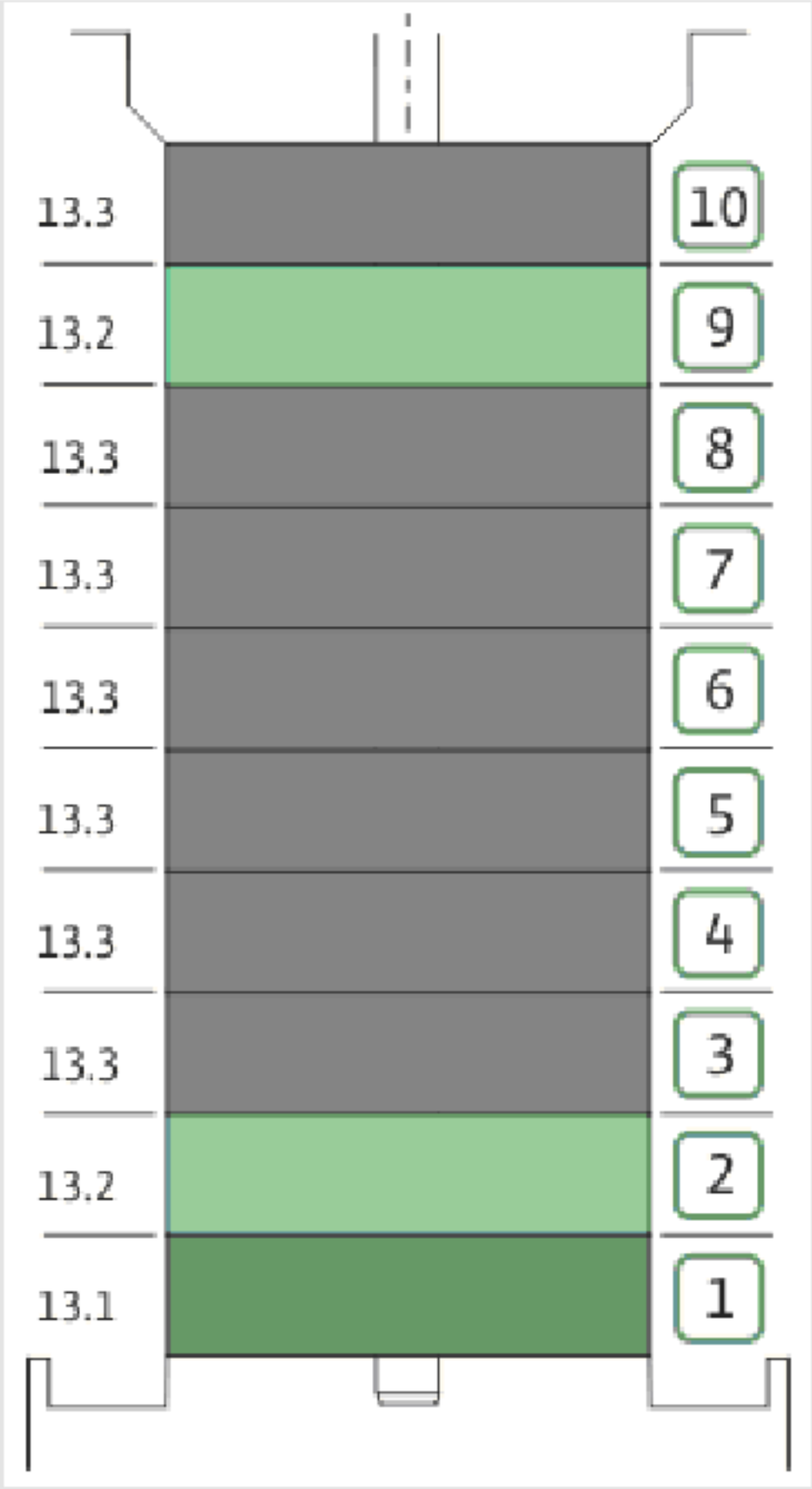
13.3
13.2
13.3
13.3
13.3
13.3
13.3
13.3
13.2
13.1
10
9
8
7
6
5
4
3
2
1

## HYDRAULIC HELIX V 410 1.4307

| Item | Article no. | Description | Quantity |
|---|---|---|---|
| 13.1 | 4178570 | STAGE HELIX 4 1.4301 KIT | 1 |
| | | > MACH.STG-CASING-WOGV-WNR-M+2-4-304 | 1 |
| | | > IMPELLER-M+4-304 | 1 |
| 13.2 | 4178569 | STAGE BEARING HELIX 4 1.4301 KIT | 1 |
| | | > MACH.BEARING-STG-CASING-WNR-M+4-304 | 1 |
| | | > IMPELLER-M+4-304 | 1 |
| | | > SHAFT SLEEVE SPACER Ø15,35x10,305-304 | 1 |
| | | > SHAFT-SLEEVE-D12xD16x14-CW | 1 |
| 13.3 | 4178574 | INTER STAGE HELIX4 1.4301< 15 stages KIT | 1 |
| | | > MACH.STD-STG-CASING-WGV+NR-M+4-304 | 1 |
| | | > IMPELLER-M+4-304 | 1 |
| | | > IMPELLER SPACER Ø12,05X14,85-L24,285-304 | 1 |

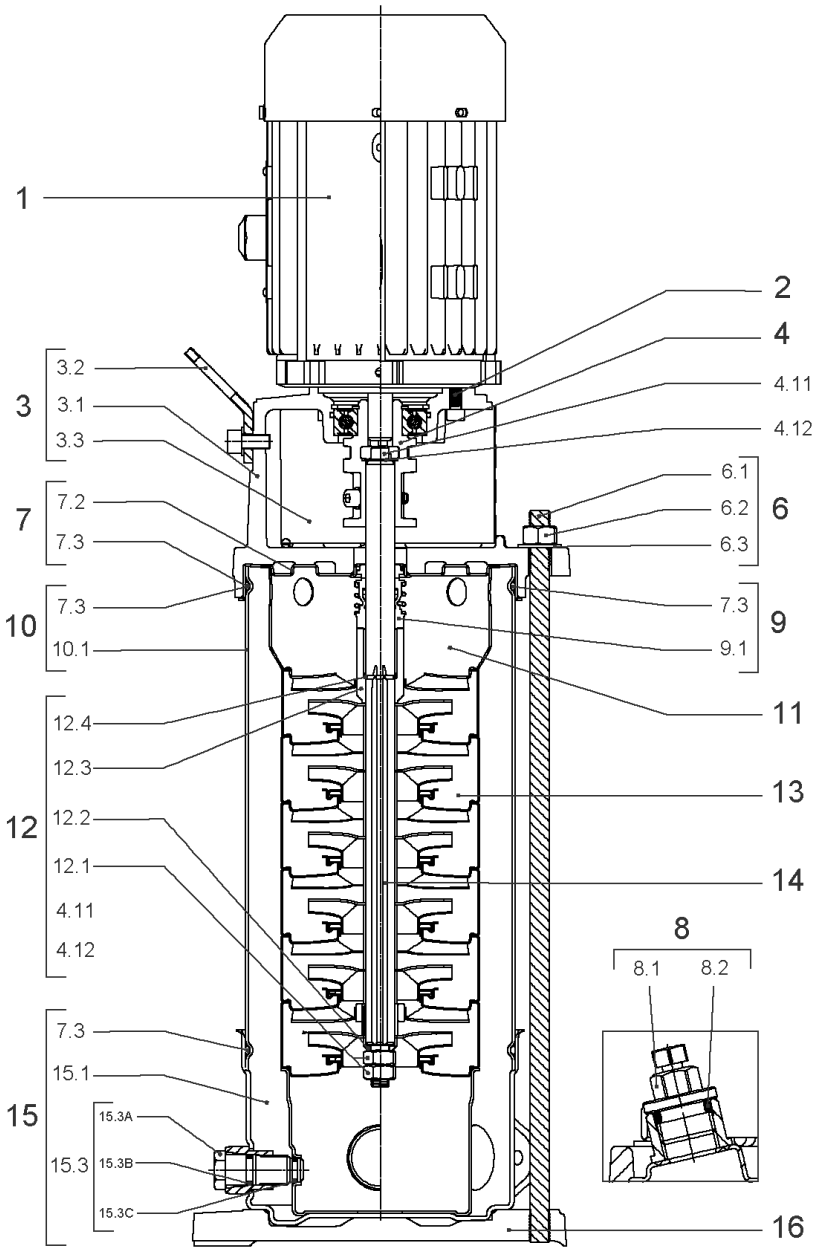
1
2
4
4.11
4.12
3
3.2
3.1
3.3
7
7.2
7.3
6
6.1
6.2
6.3
10
7.3
10.1
9
7.3
9.1
11
12
12.4
12.3
12.2
12.1
4.11
4.12
13
14
8
8.1
8.2
15
7.3
15.1
15.3
15.3A
15.3B
15.3C
16

## HELIX VE410-1/16/E/S (4201575)

| Item | Article no. | Description | Quantity |
|---|---|---|---|
| 1 | | DRIVE HELIX-VE410-IE4-WE KIT | 1 |
| Note: MOTOR BRAND WILO ELEC | | | |
| | | SPARE PARTS MOTOR:ON REQUEST | 1 |
| 2 | 4159707 | SCREW M8X30 (4 PIECES) | 1 |
| 3 | 4213784 | LANTERN FT115 HELIX KIT | 1 |
| 3.1 | | > LANT-MOT-VMI-ReDTC6"-FT115-MACHINED+CATA | 1 |
| 3.2 | 4184852 | > EYELET CPL.FT HELIX (2 PIECES) | 1 |
| 3.3 | 4213782 | > COUPLING PROTECTOR FT115/130 HELIX KIT | 1 |
| 4 | 4178600 | COUPLING D.12XD.24 FT115 KIT | 1 |
| 6 | 2127554 | STUD BOLT M12X437 KIT | 1 |
| 7 | 4212722 | STATIONARY RING HOLDER HELIX D23 ReDTC | 1 |
| 7.2 | 4212720 | > STATIONARY RING HOLDER HELIX D23 VP. | 1 |
| 7.3 | 4176513 | > O-RING FOR PUMP JACKET VP. | 1 |
| 8 | 4212724 | FILING/PURGING PLUG HELIX ReDTC KIT | 1 |
| 8.1 | | > FILLING PLUG MVI6"-304 | 1 |
| 8.2 | 4177800 | > O-RING EPDM PLUG HELIX VP. | 1 |
| 9 | 4212726 | MECH.SEAL HELIX V2/4 O/E ReDTC KIT | 1 |
| 9.1 | 4178563 | > M.SEAL.HELIX2-4 O/E VP. | 1 |
| 7.3 | 4176513 | > O-RING FOR PUMP JACKET VP. | 1 |
| 10 | 2127577 | HOUSING PIPE D.152x310 1.4301 KIT | 1 |
| 11 | 4178566 | CENTERING STAGE-RETURN HELIX4 1.4307 VP | 1 |
| 12 | 4212729 | SHAFT EQUIPMENT HELIX V2/4 ReDTC KIT | 1 |
| 12.1 | | > NUT-H-M8-STAINLESS-STEEL A4-70 | 1 |
| 12.2 | | > SHAFT END WASHER Ø8/Ø12 316L | 1 |
| 12.3 | | > 1/2-SNAP-RING-2/4M3-316L | 1 |
| 12.4 | | > STOP-RUSH-1/2-D12xd2-M+316 | 1 |
| 4.11 | | > SCREW CHC-M6X14-8.8-ISO4762-GEOMET500A | 1 |
| 4.12 | | > WASHER D.24 L6U ZINK | 1 |
| 13 | | HYDRAULIC HELIX V 410 1.4307 | 1 |
| 14 | 4213771 | SHAFT D.12X381 HELIX 1.4057 VP. | 1 |
| 15 | 4174079 | PUMP HOUSING HELIX DN32 PN16 1.4301 KIT | 1 |
| 7.3 | 4176513 | > O-RING FOR PUMP JACKET VP. | 1 |
| 15.1 | | > BLASTING PPE HOUSING V-PN16-DN32-5"-304 | 1 |
| 15.2 | 4217889 | > COUNTER FLANGE-G1"-PN16-GJL KIT | 1 |

| Item | Article no. | Description | Quantity |
|---|---|---|---|
| 15.3 | 4171321 | > PRIMING/DRAIN PLUG EPDM HELIX KIT | 1 |
| 16 | 4177964 | BASEPLATE HELIX V2/4/6 PN16 VP. | 1 |

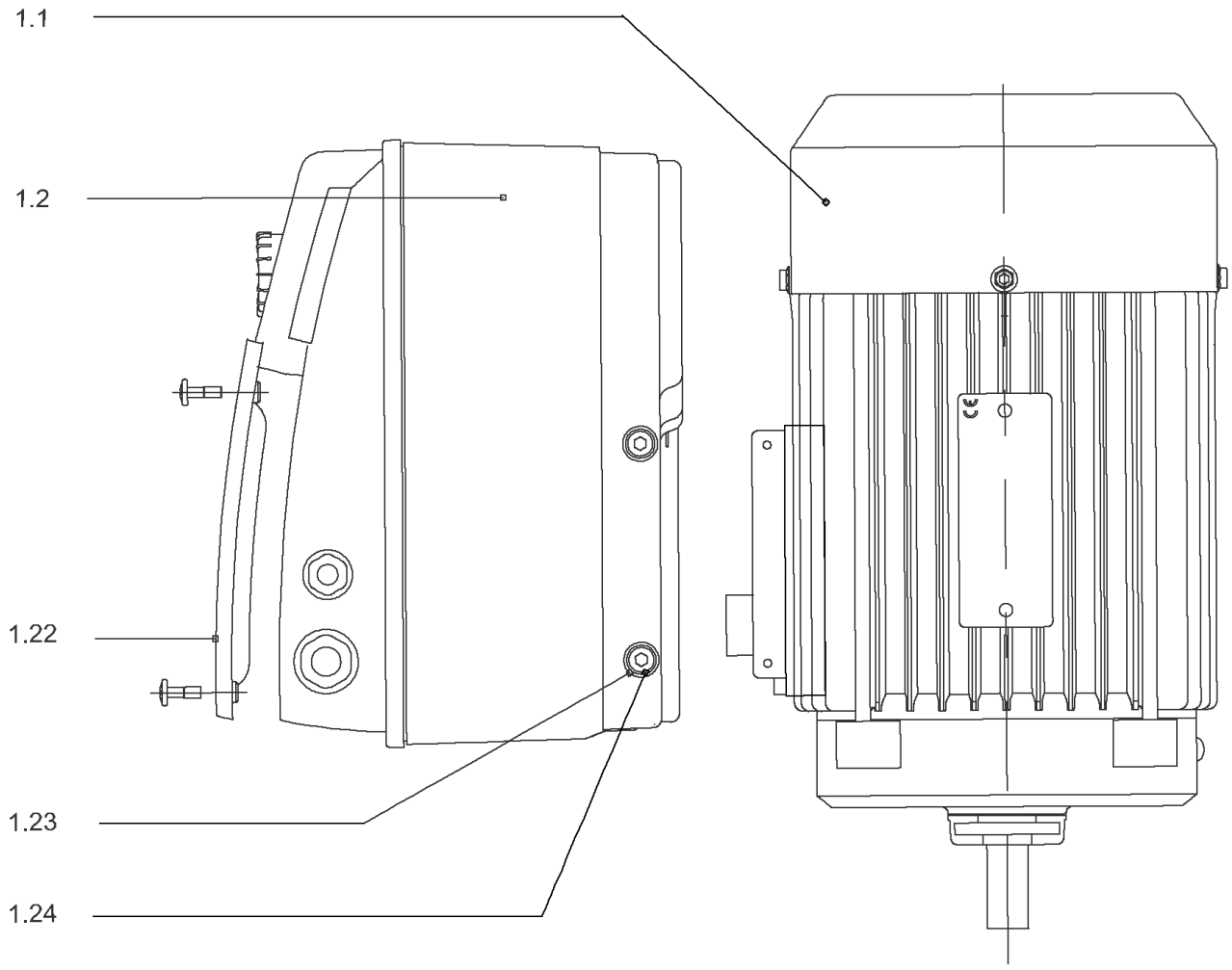
1.1
1.2
1.22
1.23
1.24

## DRIVE HELIX-VE410-IE4-WE KIT

| Item | Article no. | Description | Quantity |
|---|---|---|---|
| 1.1 | 4207920 | MOTOR 2.2/2/90 3~ 380V 60HZ IE4 WE VP. | 1 |
| | | SPARE PARTS MOTOR:ON REQUEST | 1 |
| 1.2 | 4209591 | MODULE HELIX-VE410-IE4-WE KIT | 1 |
| 1.22 | 2054227 | > MODULE COVER/GASKET TL3/4 KIT | 1 |
| 1.23 | 4215716 | > SCREW M5X16 DIN912 8.8 A2A (4pieces) VP. | 1 |
| 1.24 | 2057978 | > RONDELLE A5,3 DIN6797 FST ZN (4 PIECES) | 1 |

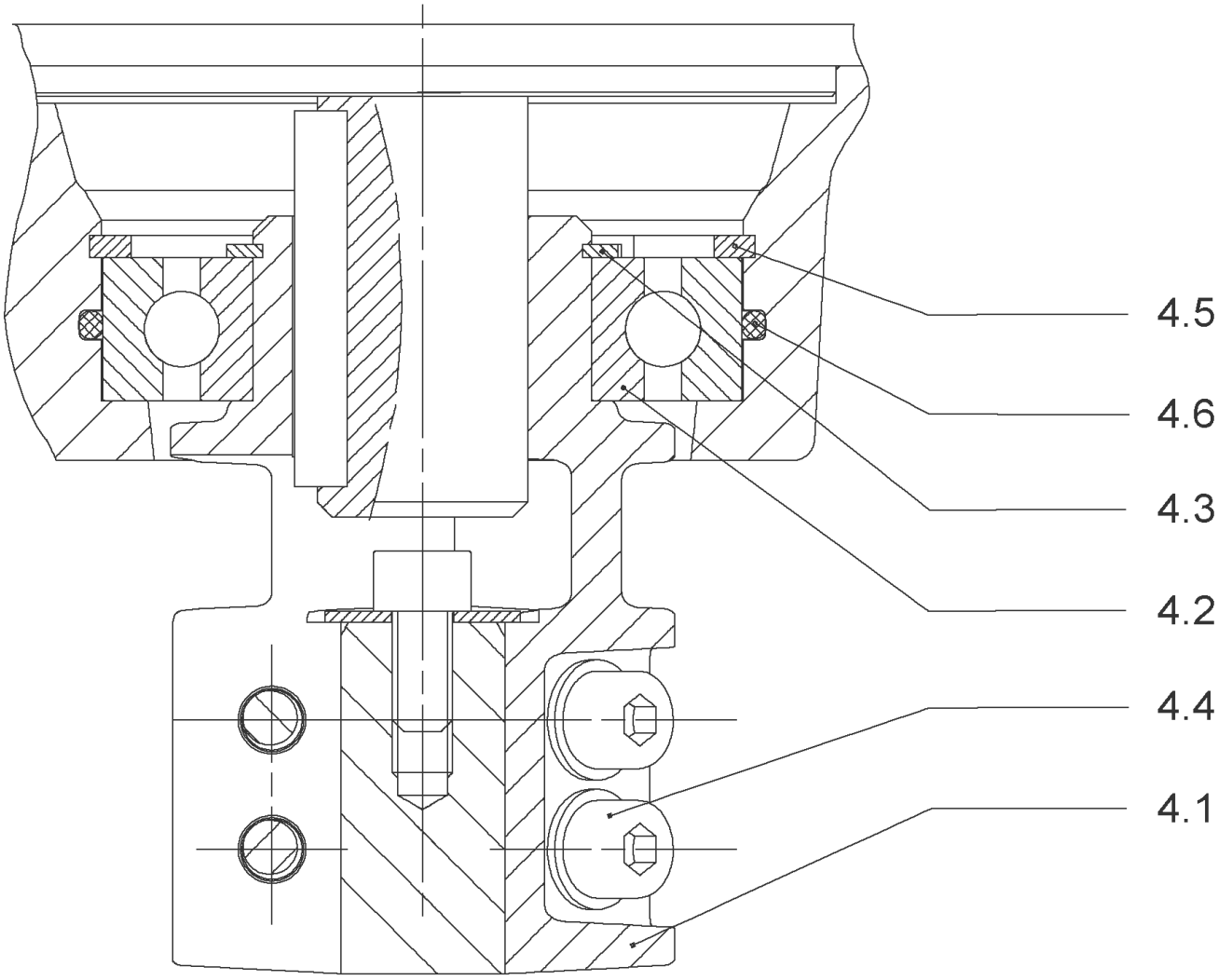
4.5
4.6
4.3
4.2
4.4
4.1

## COUPLING D.12XD.24 FT115 KIT (4178600)

| Item | Article no. | Description | Quantity |
|---|---|---|---|
| 4.1 | | COUPLING-M+ Ø12XØ24-FT115-MACHINED | 1 |
| 4.2 | 2131023 | BALL BEARING 6207/ZZ-C3(HT)VP. | 1 |
| 4.3 | 4234254 | CIRCLIP-FOR-SHAFT-D35x1.5 VP. | 1 |
| 4.4 | 4157726 | SCREW KIT M8X30 (4 PIECES) | 1 |
| 4.5 | 4234251 | CIRCLIP-D72x2.5 VP. | 1 |
| 4.6 | 4234246 | O-RING 72X3 VP. | 1 |
| | | NOMEL CONTACT WASHER 8x16x1,4 STEEL ZC | 1 |

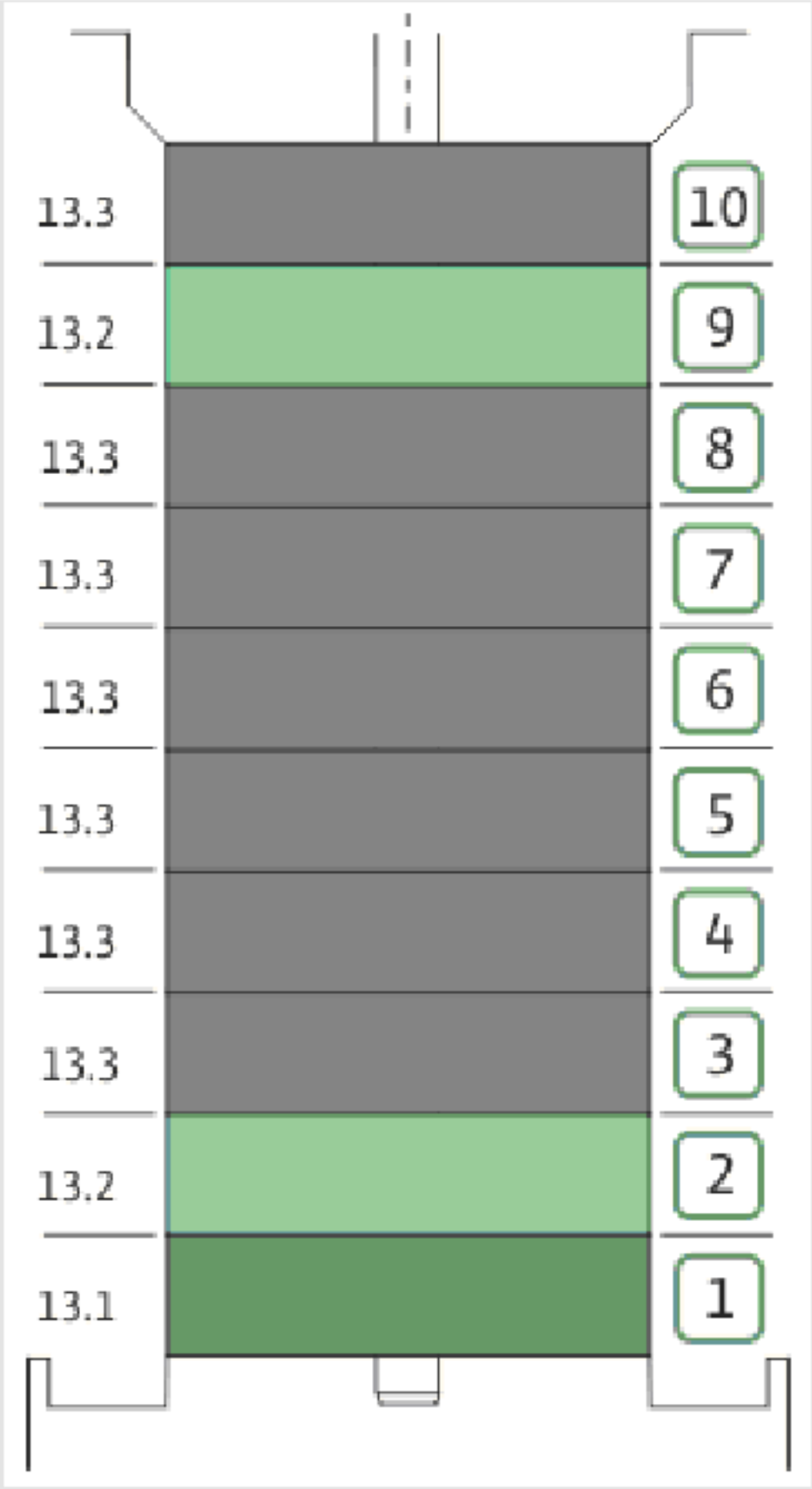
13.3
13.2
13.3
13.3
13.3
13.3
13.3
13.3
13.2
13.1
10
9
8
7
6
5
4
3
2
1

| Item | Article no. | Description | Quantity |
|---|---|---|---|
| 13.1 | 4178570 | STAGE HELIX 4 1.4301 KIT | 1 |
| | | > MACH.STG-CASING-WOGV-WNR-M+2-4-304 | 1 |
| | | > IMPELLER-M+4-304 | 1 |
| 13.2 | 4178569 | STAGE BEARING HELIX 4 1.4301 KIT | 1 |
| | | > MACH.BEARING-STG-CASING-WNR-M+4-304 | 1 |
| | | > IMPELLER-M+4-304 | 1 |
| | | > SHAFT SLEEVE SPACER Ø15,35x10,305-304 | 1 |
| | | > SHAFT-SLEEVE-D12xD16x14-CW | 1 |
| 13.3 | 4178574 | INTER STAGE HELIX4 1.4301< 15 stages KIT | 1 |
| | | > MACH.STD-STG-CASING-WGV+NR-M+4-304 | 1 |
| | | > IMPELLER-M+4-304 | 1 |
| | | > IMPELLER SPACER Ø12,05X14,85-L24,285-304 | 1 |

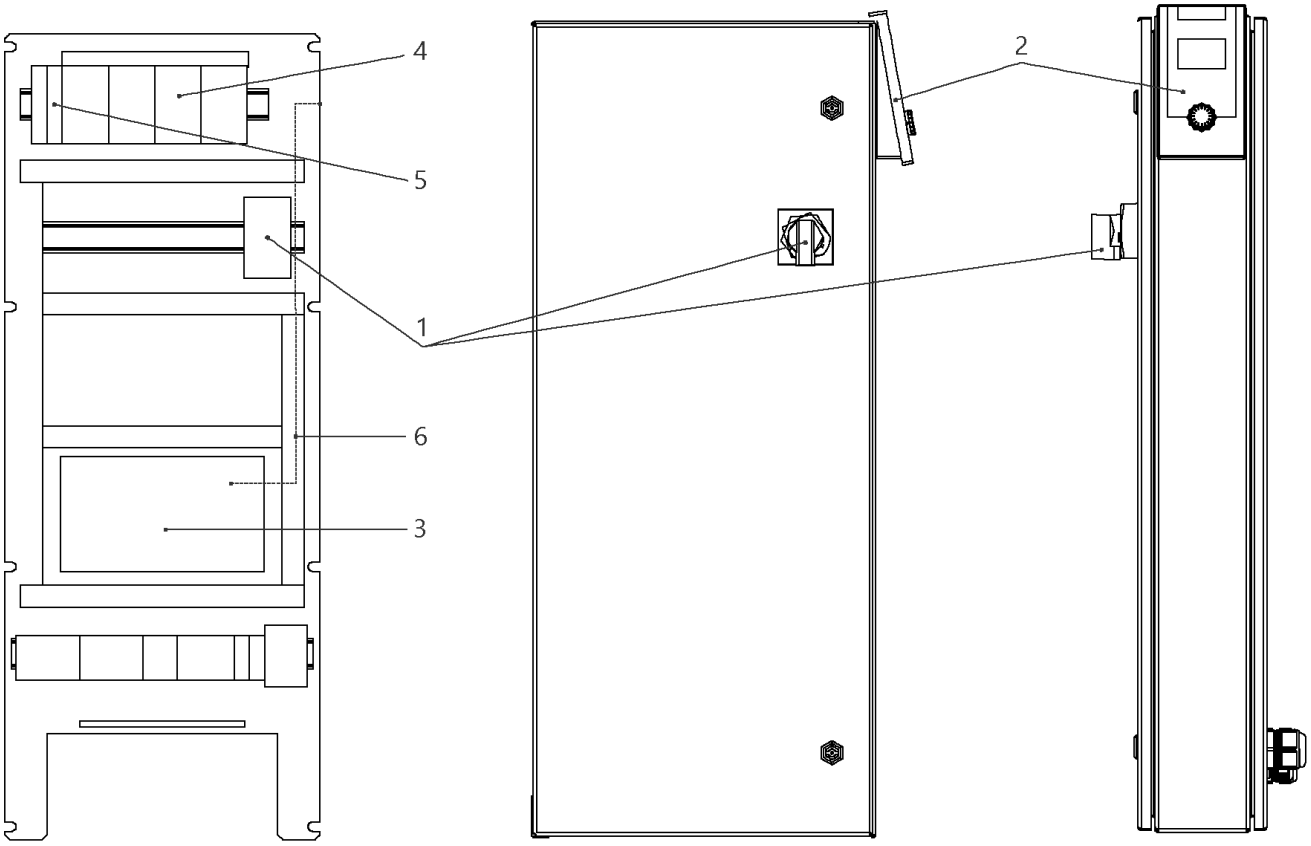
4
5
1
6
3
2

## W-CTRL-SCE-B-2x2,2KW-T4-FM-ND2

| Item | Article no. | Description | Quantity |
|---|---|---|---|
| 1 | 2104470 | MAIN SWITCH OT40F3 L250 KIT | 1 |
| 2 | 4184784 | CONTROL PANEL HMI SC KIT | 1 |
| 2 | 4185259 | ASSEMBLY DISPLAY SC PKG VP. | 1 |
| 3 | 4185257 | ASSEMBLY CPU SCe Booster VP. | 1 |
| 4 | 2051217 | AUTOM.CIRCUIT BREAKER S203 B16 TO7,5kW | 1 |
| 5 | 2046288 | CIRCUIT BREAKER S201 B16 | 1 |
| 6 | 4194956 | PATCH CABLE RJ45 CAT6 1,0M BLUE SC-PANEL | 1 |

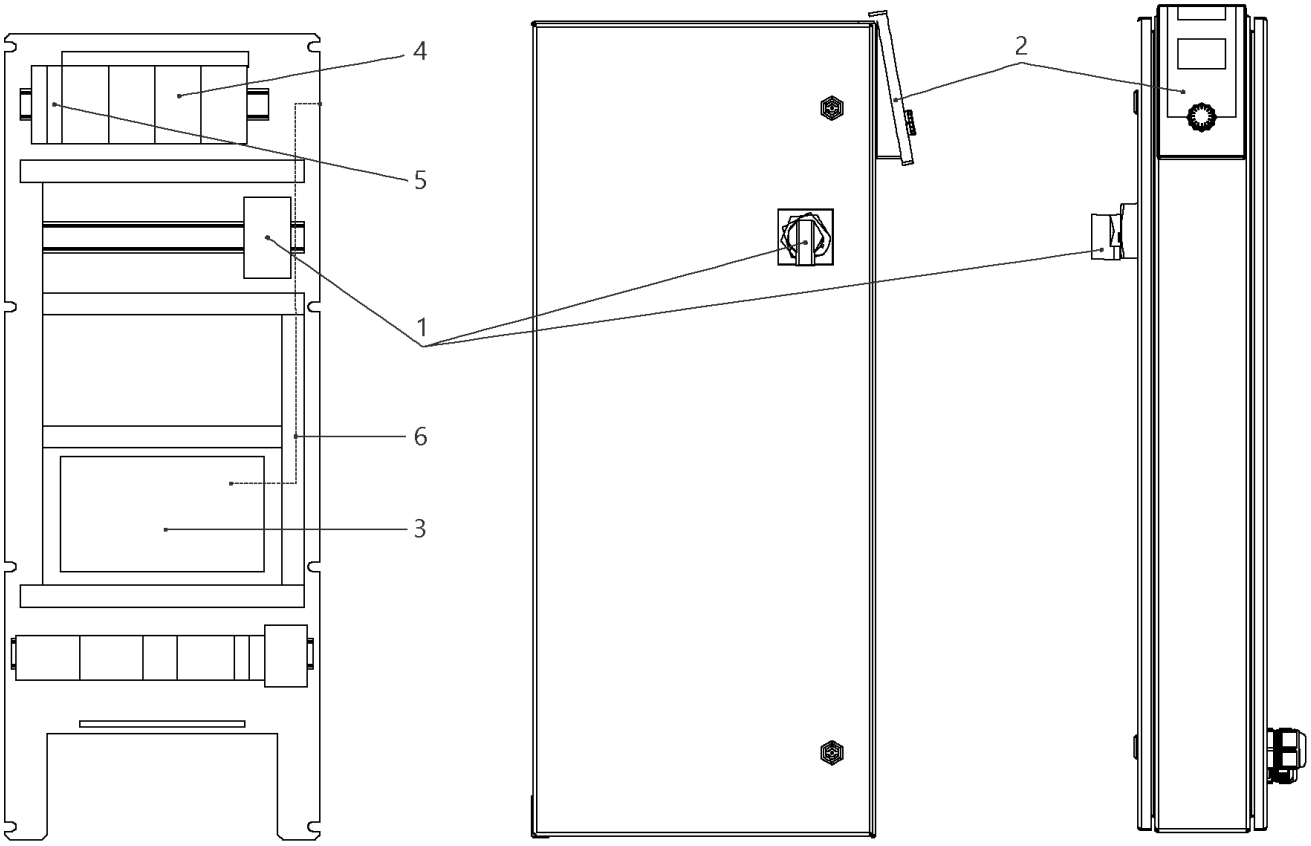
4
5
1
6
3
2

## W-CTRL-SCE-B-2x2,2-3,0KW-T4-FM-ND1

| Item | Article no. | Description | Quantity |
|---|---|---|---|
| 1 | 2104470 | MAIN SWITCH OT40F3 L250 KIT | 1 |
| 2 | 4184784 | CONTROL PANEL HMI SC KIT | 1 |
| 2 | 4185259 | ASSEMBLY DISPLAY SC PKG VP. | 1 |
| 3 | 4185257 | ASSEMBLY CPU SCe Booster VP. | 1 |
| 4 | 2051217 | AUTOM.CIRCUIT BREAKER S203 B16 TO7,5kW | 1 |
| 5 | 2046288 | CIRCUIT BREAKER S201 B16 | 1 |
| 6 | 4197081 | CABLE RJ45 CAT6 0,5M RED SC-PANEL VP. | 1 |

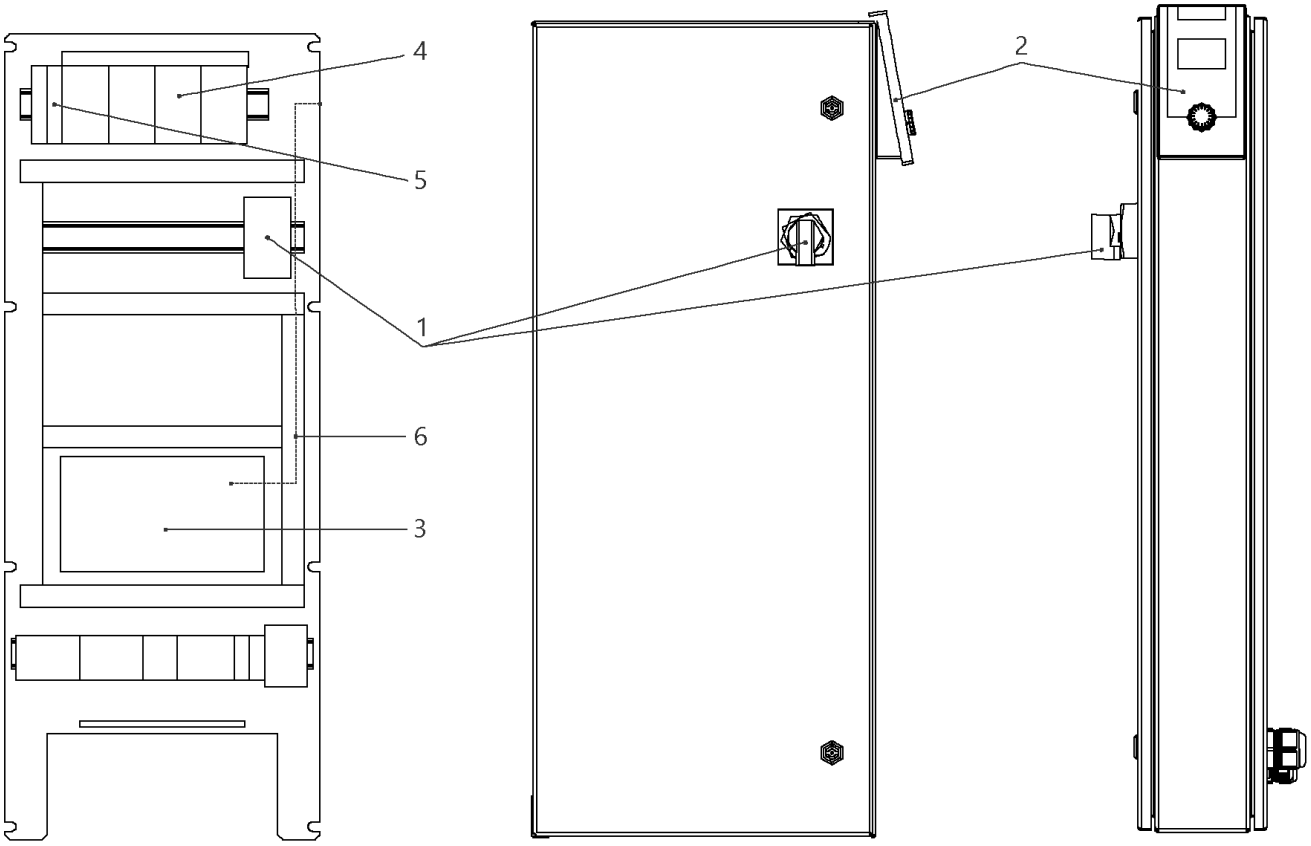
4
5
1
6
3
2

## W-CTRL-SCE-B-2x10A-T34-FM-ND1-AVC-PKG (2541913)

| Item | Article no. | Description | Quantity |
|---|---|---|---|
| 1 | 2104470 | MAIN SWITCH OT40F3 L250 KIT | 1 |
| 2 | 4184784 | CONTROL PANEL HMI SC KIT | 1 |
| 2 | 4185259 | ASSEMBLY DISPLAY SC PKG VP. | 1 |
| Note: DISPLAY ALONE / PLATINE SEULE | | | |
| 3 | 4185257 | ASSEMBLY CPU SCe Booster VP. | 1 |
| 4 | 2119861 | AUTOMATIC CIRCUIT BREAKER S203 B13 3POL. | 1 |
| 5 | 2046288 | CIRCUIT BREAKER S201 B16 | 1 |
| 6 | 4197081 | CABLE RJ45 CAT6 0,5M RED SC-PANEL VP. | 1 |

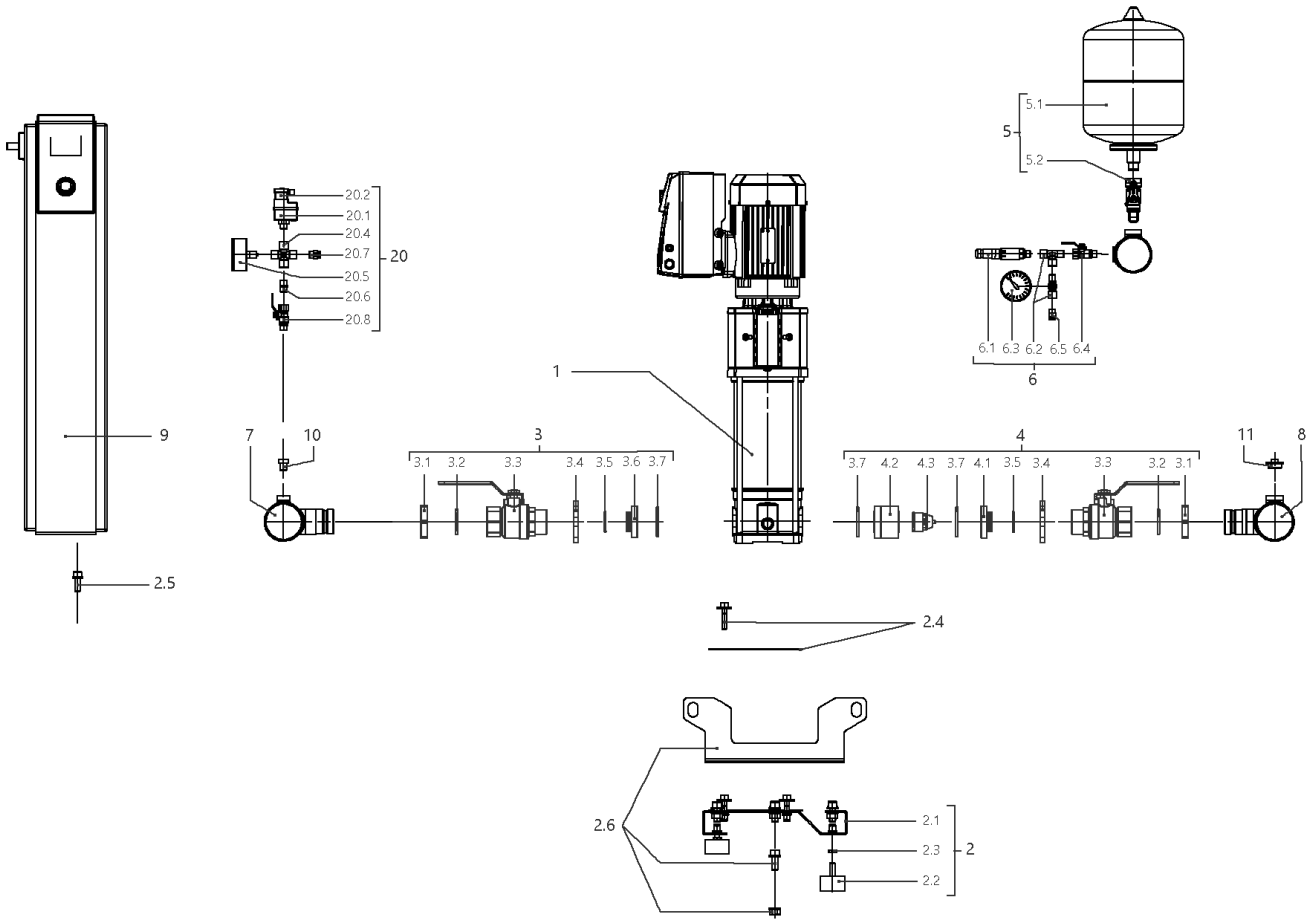
5.1
5
5.2
20.2
20.1
20.4
20.7
20
20.5
20.6
20.8
6.1 6.3 6.2 6.5 6.4
6
1
9
7
10
3
3.1 3.2 3.3 3.4 3.5 3.6 3.7
4
3.7 4.2 4.3 3.7 4.1 3.5 3.4 3.3 3.2 3.1
11
8
2.5
2.4
2.6
2.1
2.3
2
2.2

## SiBoost Smart 2HELIX VE602 (2537332)

| Item | Article no. | Description | Quantity |
|---|---|---|---|
| 1 | | HELIX VE602-1/16/E/S | 1 |
| Note: TO / BIS / JUSQU'AU 31/03/2016 | | | |
| 1 | 4201577 | HELIX VE602-1/16/E/S | 1 |
| Note: FROM / AB / À PARTIR DU 01/04/2016 | | | |
| 2 | 4199874 | BASE PLATE DE2 850x300 M10 KIT | 1 |
| 2.1 | | > BASEPLATE_2x4/6/10V_E300_850x300_BOX_150 | 1 |
| 2.2 | 2028654 | > VIBRATION DAMPER D.50X30 M10X28 | 1 |
| 2.3 | 2028281 | > NUT M10 DIN936 (ISO4035) 17H VZ | 1 |
| 2.4 | 4199875 | > HOLDER PUMP Siboost Helix V2/4 KIT | 1 |
| 2.5 | 4197084 | > HOLDER SWITCHBOX WILO Smart Control KIT | 1 |
| 2.6 | 4197085 | > LIFTING Siboost HELIX SC KIT | 1 |
| 3 | 4199876 | SUCTION SIDE Siboost Helix V2/4/6 KIT | 1 |
| 3.1 | 2032610 | > NUT G11/4 MS VP. | 1 |
| 3.2 | 2032611 | > O-RING ID.36,09X3,53N DIN3771 E7502 | 1 |
| 3.3 | 2507646 | > BALL VALVE G11/4"M-F-W.HANDLE 1/4-TURN | 1 |
| 3.4 | 2032613 | > SCREWED FLANGE G1 1/4" LK-75 ST37VZ | 1 |
| 3.5 | 2032614 | > O-RING ID.29,82X2,62N DIN3771 E7502 | 1 |
| 3.6 | 2032615 | > SPACER F.I/A KUH.DN32 CUZN | 1 |
| 3.7 | 2032616 | > O-RING ID.44X3,53N DIN3771 E7502 | 1 |
| 4 | 4199877 | DELIVERY SIDE Siboost Helix V2/4/6 KIT | 1 |
| 3.1 | 2032610 | > NUT G11/4 MS VP. | 1 |
| 3.2 | 2032611 | > O-RING ID.36,09X3,53N DIN3771 E7502 | 1 |
| 3.3 | 2507646 | > BALL VALVE G11/4"M-F-W.HANDLE 1/4-TURN | 1 |
| 3.4 | 2032613 | > SCREWED FLANGE G1 1/4" LK-75 ST37VZ | 1 |
| 3.5 | 2032614 | > O-RING ID.29,82X2,62N DIN3771 E7502 | 1 |
| 4.1 | 2058116 | > SPACER F.I/A KUH.DN32 CUZN | 1 |
| 3.7 | 2032616 | > O-RING ID.44X3,53N DIN3771 E7502 | 1 |
| 4.2 | 2058115 | > HOUSING RFV(RV-IN) DN32 SGS/DRS | 1 |
| 4.3 | 2027870 | > NON-RETURN-DEVICE INSERT DN32(MTR) | 1 |
| 5 | 2032642 | DIAPHREM TANK 8L/PN16 DIN4807/T5 KIT | 1 |
| 5.1 | 2045914 | > DIAPHREM TANK 8L TYP-DD 16BAR | 1 |
| 5.2 | 2027853 | > FLOW FITTING G3/4 FOR DIAPHRAGM VES. | 1 |
| 6 | 4197076 | PRESSURE SENSOR/ GAUGE 0-16BAR KIT | 1 |
| 6.1 | 2085909 | > PRESS.SENSOR 1/4" 0-16BAR 4-20MA VP. | 1 |

| Item | Article no. | Description | Quantity |
|---|---|---|---|
| 6.2 | 4197077 | > T-PIECE 1/4" VP. | 1 |
| 6.3 | 2028692 | > PRESSURE GAUGE NG63-PN16-G1/4 | 1 |
| 6.4 | 2028291 | > BALL TAP R1/4" PN42 GIACOMINI R254DL | 1 |
| 6.5 | 2028691 | > BLOWGUN 1/4" MS 30BAR VP. | 1 |
| 7 | 4200092 | PIPE DE2 2''-2x1"1/4+1x1/4x600 VP. | 1 |
| 8 | 4200093 | PIPE DE2 2''-2x11/4"+1x1/4+1x3/4x600 VP. | 1 |
| 9 | | W-CTRL-SCE-B-2x0,55-1,5KW-T4-FM-ND1 | 1 |
| Note: TO / BIS / JUSQU'AU 18/05/2014 | | | |
| 9 | 2541913 | W-CTRL-SCE-B-2x10A-T34-FM-ND1-AVC-PKG | 1 |
| Note: FROM / AB / À PARTIR DU 19/05/2014 | | | |
| 10 | 4197079 | PLUG G1/4"x10 AISI304 KIT | 1 |
| 11 | 2032654 | PLUG R3/4" MS VIEGA 1751 | 1 |
| 20 | 2521150 | ASSEMBLY WMS. DE-EB. +VP | 1 |
| 20.1 | 2028652 | > PRESSURE SWITCH PS3-ASR 1/(1,3) VP. | 1 |
| 20.2 | 2130983 | > PLUG PS3-415 WITH KABEL 1,5M 2NO VP. | 1 |
| 20.4 | 2028290 | > CROSSPIECE R1/4" MS-NICKEL | 1 |
| 20.5 | 2028687 | > PRESSURE GAUGE NG63 R1/4" HI.0-6BAR | 1 |
| 20.6 | 2054268 | > DUAL NIPPLE G1/4" x G1/4" MS VP. | 1 |
| 20.7 | 2028691 | > BLOWGUN 1/4" MS 30BAR VP. | 1 |
| 20.8 | 2028291 | > BALL TAP R1/4" PN42 GIACOMINI R254DL | 1 |

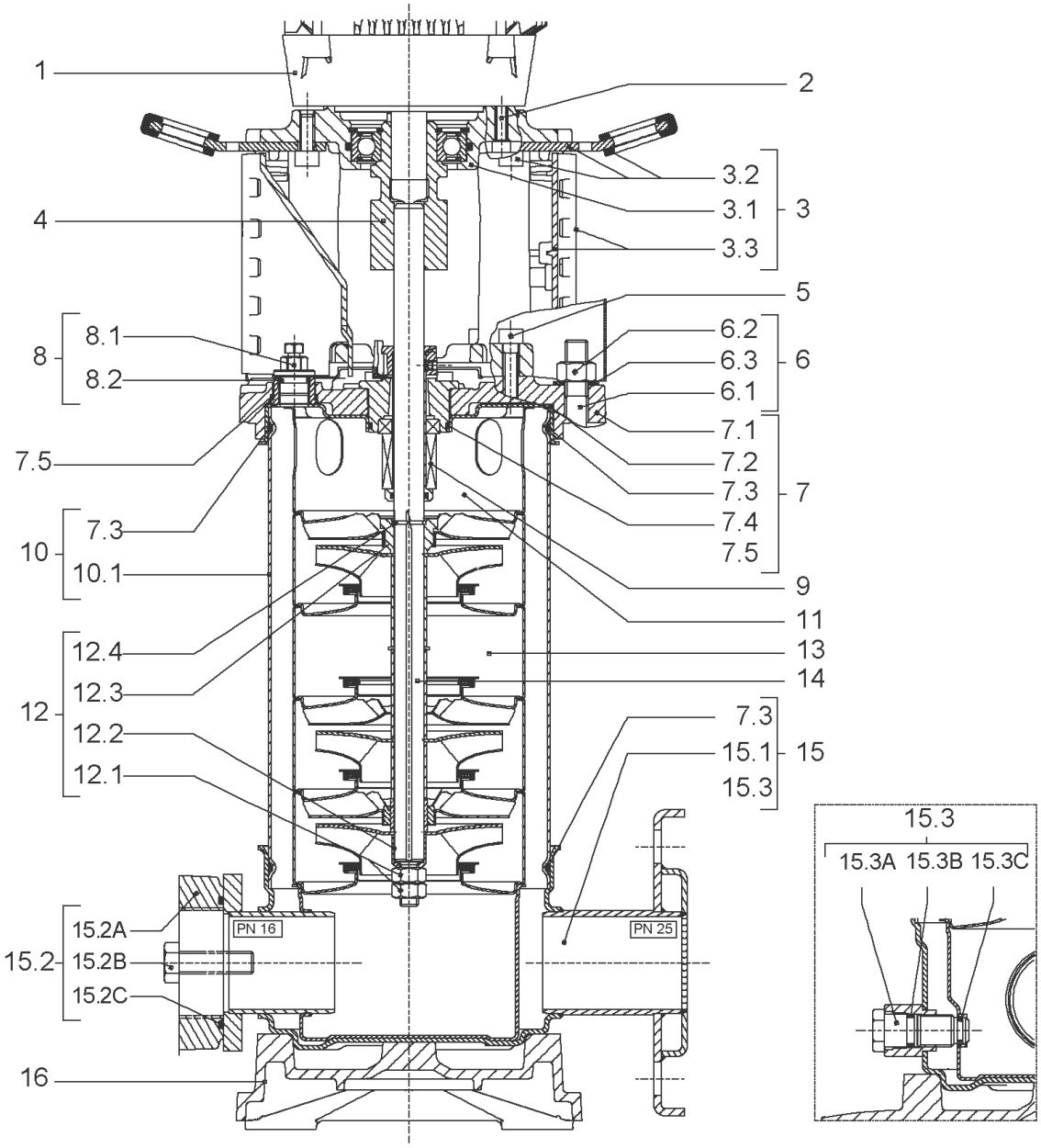
1
2
3.2
3.1
3
3.3
4
5
8.1
8
8.2
6.2
6.3
6
6.1
7.1
7.5
7.2
7.3
7
7.4
7.3
10
7.5
10.1
9
11
12.4
13
12.3
14
12
12.2
7.3
15.1
15
12.1
15.3
15.3
15.3A 15.3B 15.3C
15.2A
PN 16
PN 25
15.2
15.2B
15.2C
16

| Item | Article no. | Description | Quantity |
|---|---|---|---|
| 1 | | DRIVE HELIX-VE602IE2-WE KIT | 1 |
| Note: MOTOR BRAND WILO ELEC | | | |
| 1 | | DRIVE HELIX-VE602-IE4-WE KIT | 1 |
| Note: MOTOR BRAND WILO ELEC | | | |
| 2 | 4159702 | SCREW M6X30 (4 PIECES) | 1 |
| 3 | 4172790 | EQUIPED LANTERN NEXIS FT 100 KIT | 1 |
| 3.1 | | > M+5_6_LANTERN_ONE-PIECE_FT100_CATA | 1 |
| 3.2 | 2127604 | > EYELET CPL.FT HELIX(2 PIECES) | 1 |
| 3.3 | 4159692 | > COUPLING PROTECTOR FT HELIX KIT | 1 |
| 4 | 4159708 | COUPLING D.16XD.19 FT100 HELIX KIT | 1 |
| 5 | 4159707 | SCREW M8X30 (4 PIECES) | 1 |
| 6 | 4177803 | STUD BOLT M12X263 KIT | 1 |
| 6.1 | | > TIE BOLT M12-263x18x30-1.4057 | 1 |
| 6.2 | 2094647 | > NUT M12 M12 ISO4032 VP. | 1 |
| 6.3 | 2123557 | > WASHER CS-12.4-24-1.6-NFE25 (4 PIECES) | 1 |
| 7 | 4210143 | STATIONARY RING HOLDER HELIX 6" EPDM | 1 |
| 7.2 | 2127607 | > STATIONARY RING HOLDER 6" HELIX 1.4301 V | 1 |
| 7.3 | 4176513 | > O-RING FOR PUMP JACKET VP. | 1 |
| 7.4 | 2127603 | > O-RING ID.37,6x2,4 EPDM VP. | 1 |
| 7.5 | 2127602 | > O-RING ID.21,35x2 EPDM VP. | 1 |
| 8 | 4159686 | FILING/PURGING PLUG HELIX EPDM KIT | 1 |
| 9 | 4171327 | SEAL-KIT-HELIX6-10-16 O/E KIT | 1 |
| 10 | 4177804 | HOUSING PIPES D.152X134 1.4301 KIT | 1 |
| 7.3 | 4176513 | > O-RING FOR PUMP JACKET VP. | 1 |
| 10.1 | | > HOUSING-PIPE Ø152-M+1001/02-304 | 1 |
| 11 | 4174087 | CENTERING STAGE-RETURN HELIX6 1.4301VP. | 1 |
| 12 | 4174086 | SHAFTS EQUIPMENT HELIX V6 MONOBLOC KIT | 1 |
| 12.1 | | > NUT-H-M10-A4.70 | 1 |
| 12.2 | | > SERRATED LOCK WASHER M+6M3-316L | 1 |
| 12.3 | | > IMPELLER STOP RING L33,2-304 | 1 |
| 12.4 | | > STOP-RUSH-1/2-D16xd2-M+316 | 1 |
| 13 | | HYDRAULIC HELIX V 602 1.4307 | 1 |
| 14 | 4177807 | SHAFT D.16X255 1.4301 VP. | 1 |
| 15 | 4217897 | PUMP HOUSING HELIX DN32 PN16 1.4301 KIT | 1 |

| Item | Article no. | Description | Quantity |
|---|---|---|---|
| 7.3 | 4176513 | > O-RING FOR PUMP JACKET VP. | 1 |
| 15.1 | | > BLASTING PPE HOUSING V-PN16-DN32-5"-304 | 1 |
| 15.2 | 4217891 | > COUNTER FLANGE-G1"1/4-PN16-GJL KIT | 1 |
| 15.3 | 4171321 | > PRIMING/DRAIN PLUG EPDM HELIX KIT | 1 |
| 16 | 4177964 | BASEPLATE HELIX V2/4/6 PN16 VP. | 1 |

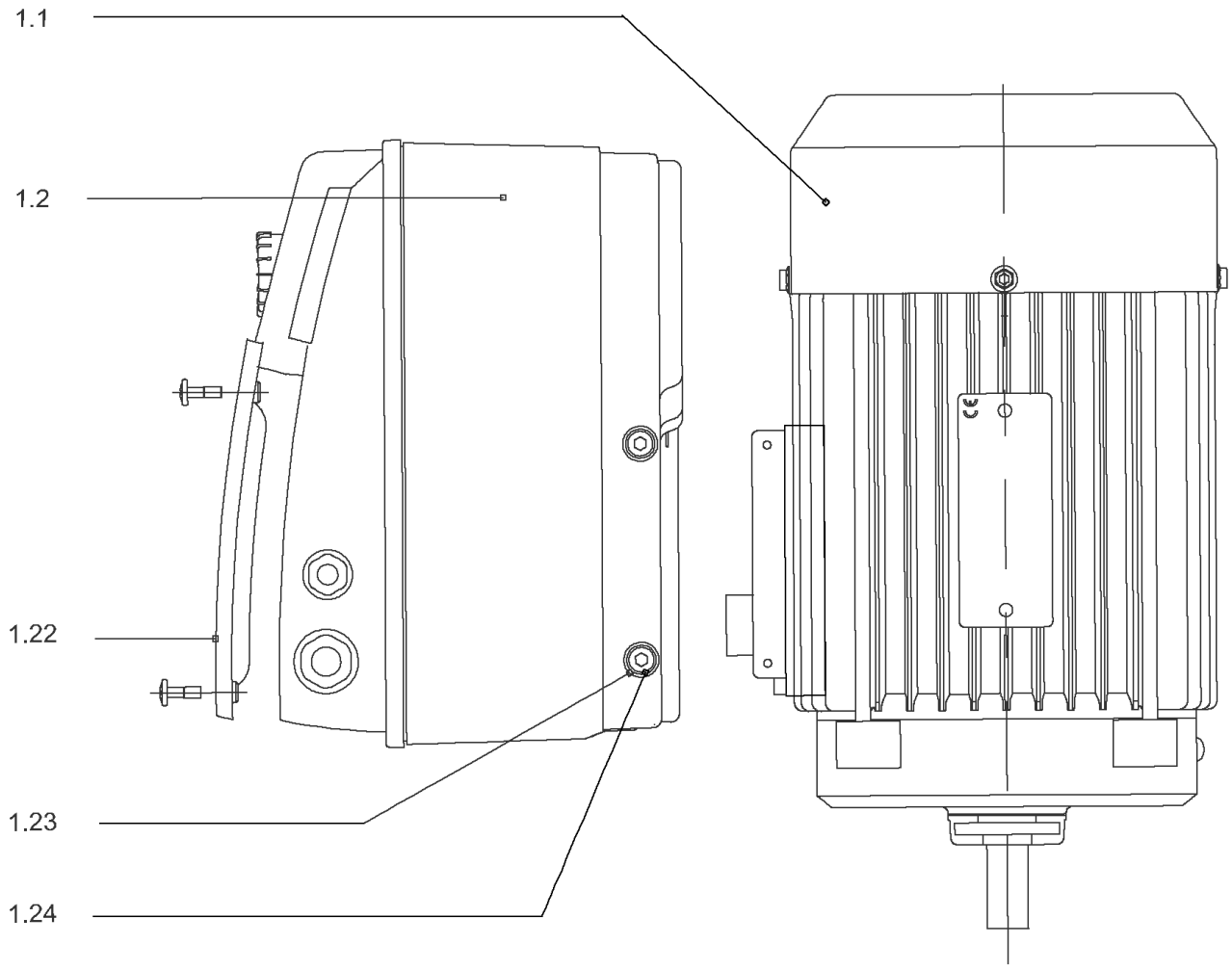
1.1
1.2
1.22
1.23
1.24

## DRIVE HELIX-VE602IE2-WE KIT

| Item | Article no. | Description | Quantity |
|---|---|---|---|
| 1.1 | | MOTOR 0,75/2/80 3~ 380V 60HZ IE2 WE VP. | 1 |
| Note: no longer available/nicht mehrlieferbar/n'est plus disponible | | | |
| | | SPARE PARTS MOTOR:ON REQUEST | 1 |
| 1.2 | 4186330 | MODULE HELIX-VE602-IE2-WE KIT | 1 |
| 1.22 | 2054372 | > MODULE COVER TL1,TL2+GASKET KIT | 1 |
| 1.23 | 4215716 | > SCREW M5X16 DIN912 8.8 A2A (4pieces) VP. | 1 |
| 1.24 | 2057978 | > RONDELLE A5,3 DIN6797 FST ZN (4 PIECES) | 1 |

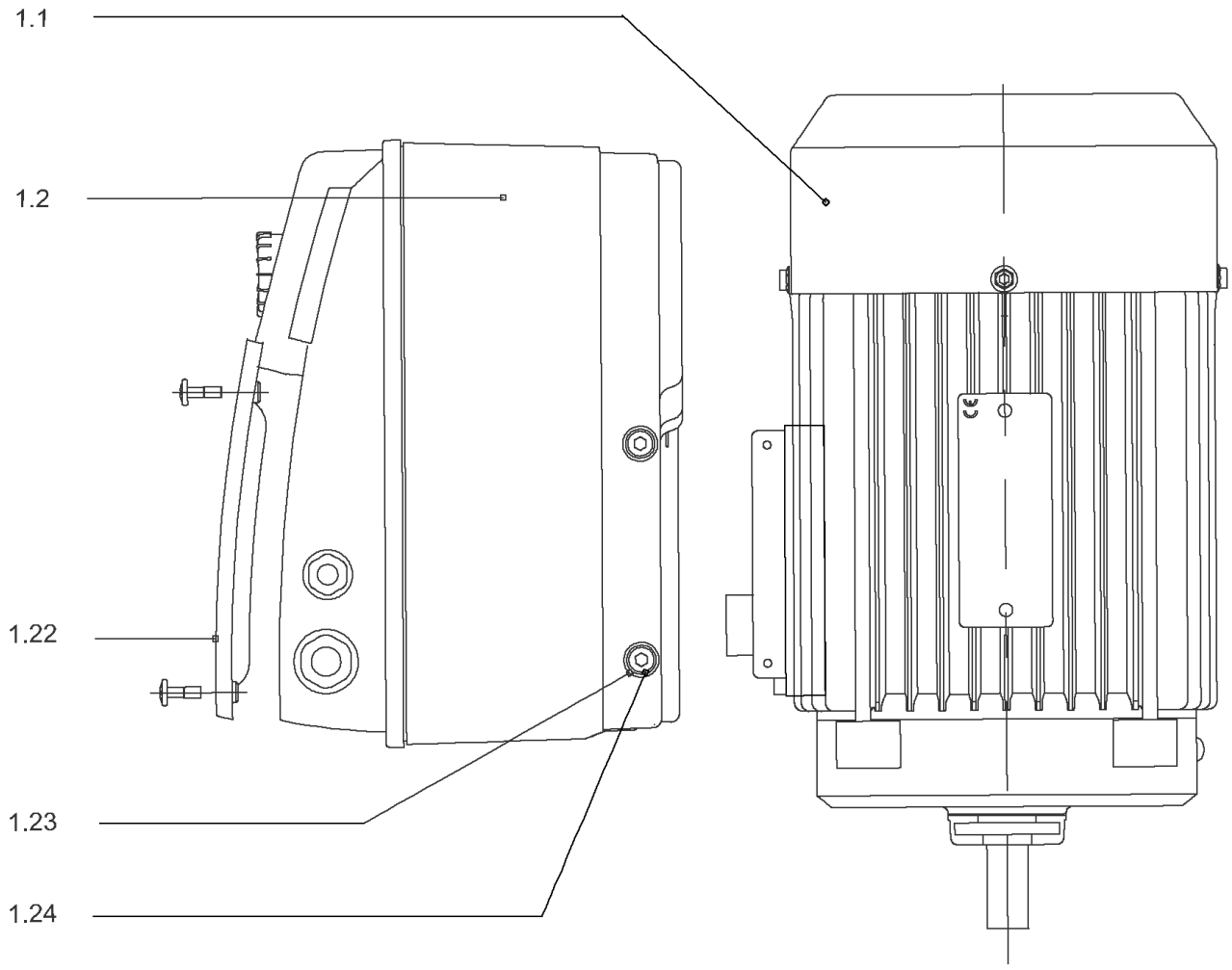
1.1
1.2
1.22
1.23
1.24

## DRIVE HELIX-VE602-IE4-WE KIT

| Item | Article no. | Description | Quantity |
|---|---|---|---|
| 1.1 | 4207914 | MOTOR 0.75/2/80 3~ 380V 60HZ IE4 WE VP. | 1 |
| | | SPARE PARTS MOTOR:ON REQUEST | 1 |
| 1.2 | 4209323 | MODULE HELIX-VE602-IE4-WE KIT | 1 |
| 1.22 | 2054372 | > MODULE COVER TL1,TL2+GASKET KIT | 1 |
| 1.23 | 4215716 | > SCREW M5X16 DIN912 8.8 A2A (4pieces) VP. | 1 |
| 1.24 | 2057978 | > RONDELLE A5,3 DIN6797 FST ZN (4 PIECES) | 1 |

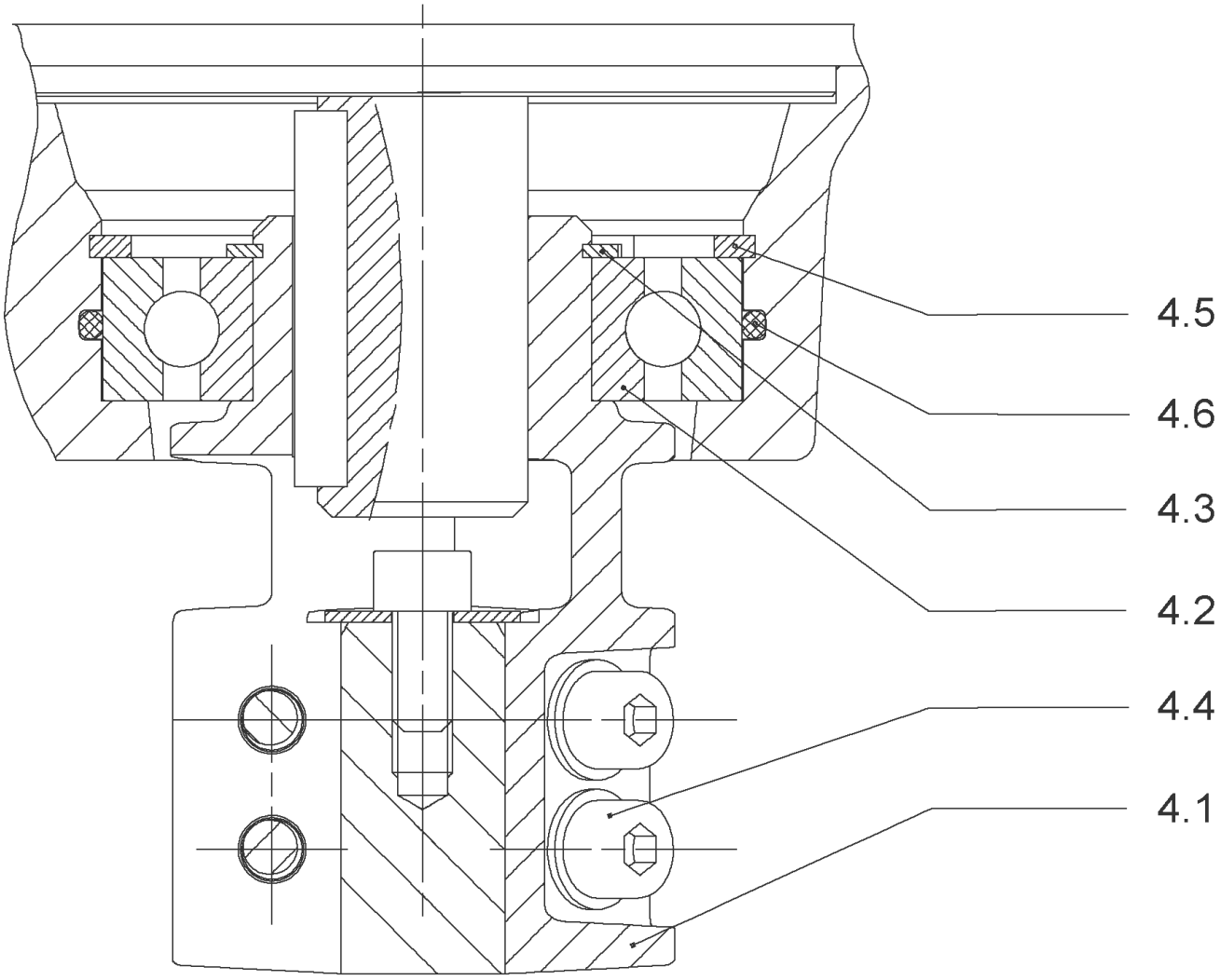
4.5
4.6
4.3
4.2
4.4
4.1

## COUPLING D.16XD.19 FT100 HELIX KIT (4159708)

| Item | Article no. | Description | Quantity |
|---|---|---|---|
| 4.1 | | COUPLING M+ Ø16XØ19 FT100 MACHINED | 1 |
| 4.2 | 2130977 | BALL BEARING 6206/ZZ-C3(HT)VP. | 1 |
| 4.3 | 4234249 | CIRCLIP-FOR-SHAFT-D30x1.5 VP. | 1 |
| 4.4 | 4212716 | SCREW M6X20 KIT (4PIECES) | 1 |
| 4.5 | 4234250 | CIRCLIP-D62x2 VP. | 1 |
| 4.6 | 4234245 | O-RING 63X3 VP. | 1 |
| | | CONTACT-WASHER-6ETR-6,1x12,2x1,8-STEEL | 1 |

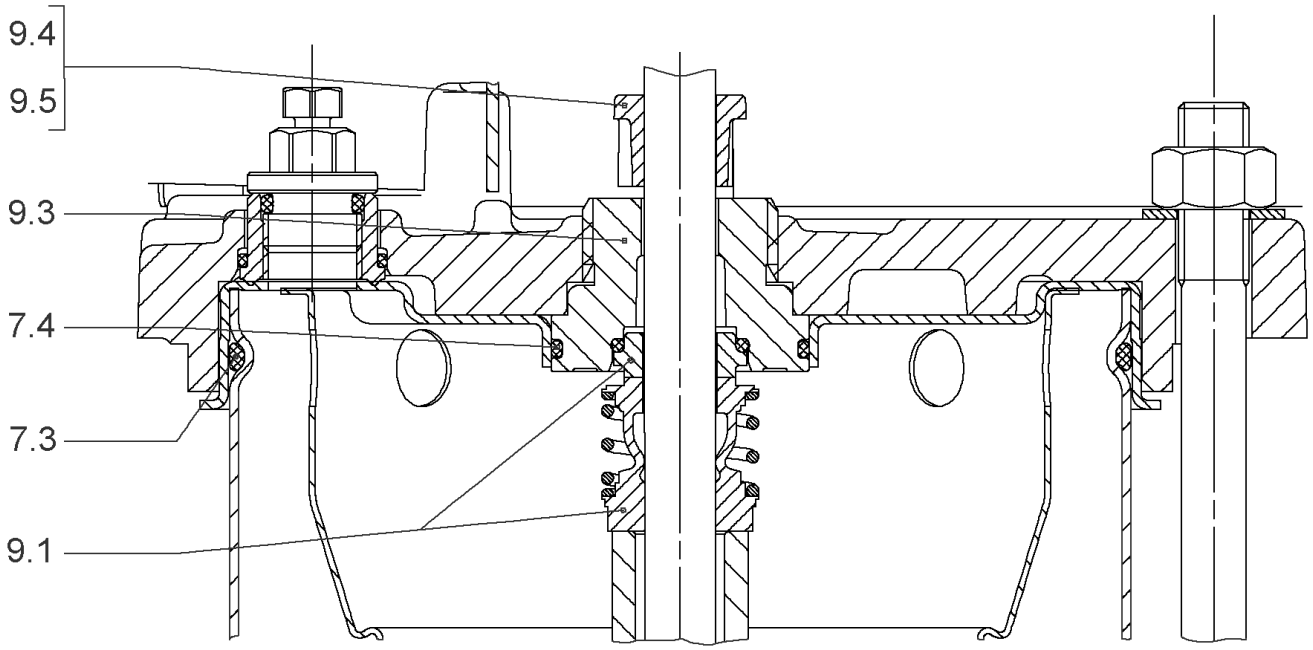
9.4
9.5
9.3
7.4
7.3
9.1

## SEAL-KIT-HELIX6-10-16 O/E KIT (4171327)

| Item | Article no. | Description | Quantity |
|---|---|---|---|
| 7.3 | 4176513 | O-RING FOR PUMP JACKET VP. | 1 |
| 7.4 | 2127603 | O-RING ID.37,6x2,4 EPDM VP. | 1 |
| 9.1 | 4177801 | MECH.SEAL HELIX6-10-16 O/E VP. | 1 |
| 9.3 | 4177798 | MACHINED RING HOLDER M+6" Ø16 304 VP. | 1 |
| 9.5 | 4177799 | MACHINED DRIVE RING Ø16 VP. | 1 |
| 9.4 | 4176520 | SCREW CH M5x5 A4-70 ( 3PIECES ) | 1 |

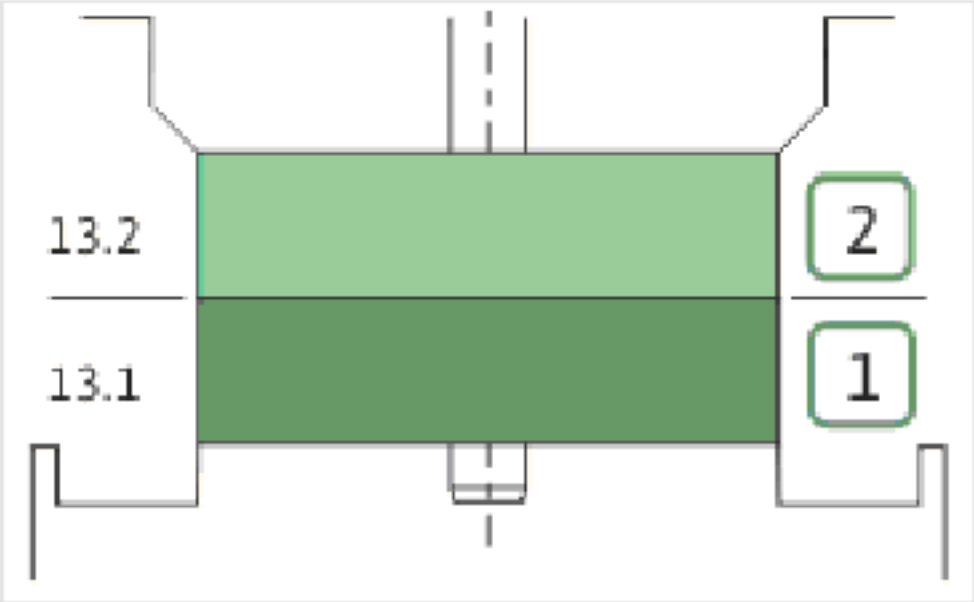
13.2
13.1
2
1

| Item | Article no. | Description | Quantity |
|---|---|---|---|
| 13.1 | 4174084 | STAGE HELIX 6 1.4301 KIT | 1 |
| | | > MACH.STG-CASING-WOGV-WNR-M+6-304 | 1 |
| | | > IMPELLER-M+6-304 | 1 |
| 13.2 | 4174089 | INTERMEDIATE STAGE HELIX 6 1.4301 KIT | 1 |
| | | > MACH.BEARING-STG-CASING-WNR-M+6-304 | 1 |
| | | > IMPELLER-M+6-304 | 1 |
| | | > SHAFT SLEEVE-SPACER-Ø19,35x18,465-304 | 1 |
| | | > SHAFT-SLEEVE-D16xD20x18-CW | 1 |

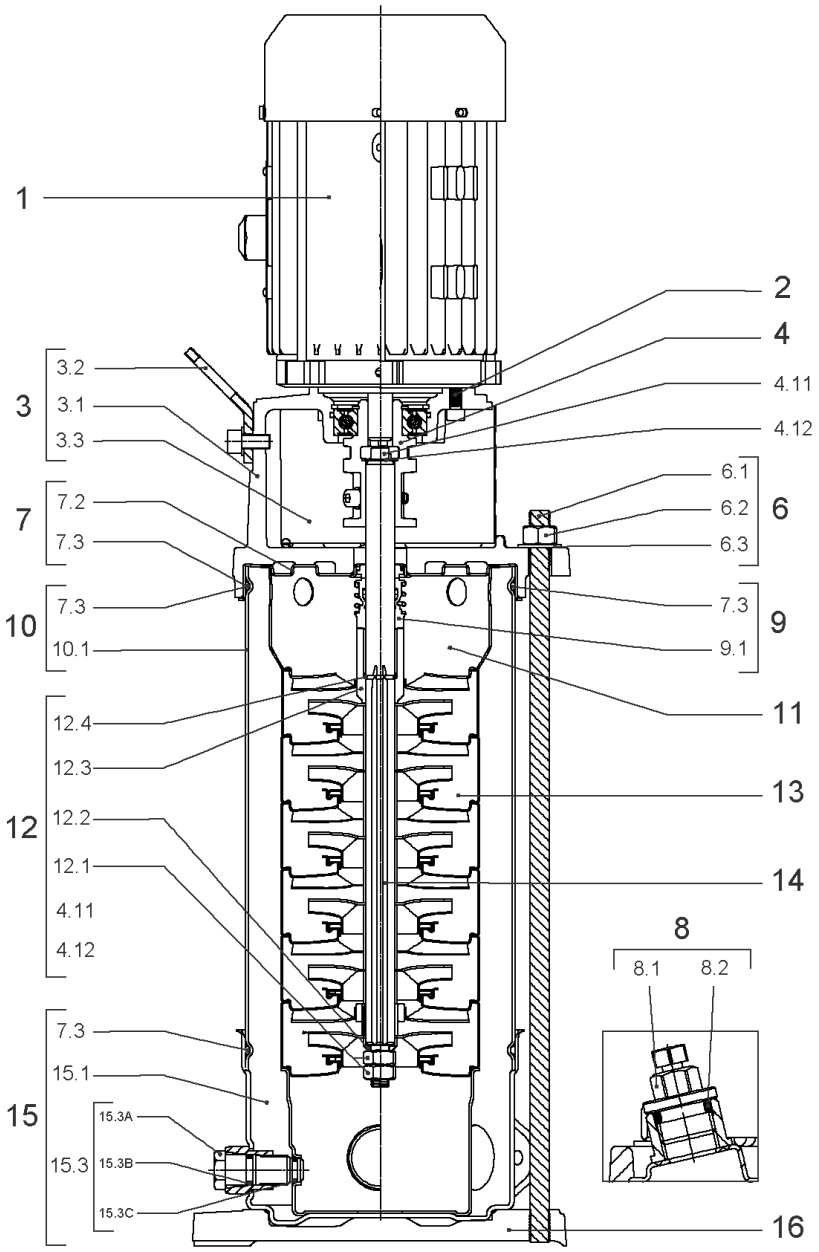
1
2
4
4.11
4.12
3
3.2
3.1
3.3
7
7.2
7.3
6
6.1
6.2
6.3
10
7.3
10.1
9
7.3
9.1
11
12
12.4
12.3
12.2
12.1
4.11
4.12
13
14
8
8.1
8.2
15
7.3
15.1
15.3
15.3A
15.3B
15.3C
16

## HELIX VE602-1/16/E/S (4201577)

| Item | Article no. | Description | Quantity |
|---|---|---|---|
| 1 | | DRIVE HELIX-VE602-IE4-WE KIT | 1 |
| Note: MOTOR BRAND WILO ELEC | | | |
| | | SPARE PARTS MOTOR:ON REQUEST | 1 |
| 2 | 4212716 | SCREW M6X20 KIT (4PIECES) | 1 |
| 3 | 4213752 | LANTERN FT100 HELIX KIT | 1 |
| 3.1 | | > LANT-MOT-VMI-ReDTC6"-FT100-MACHINED+CATA | 1 |
| 3.2 | 4184852 | > EYELET CPL.FT HELIX (2 PIECES) | 1 |
| 3.3 | 4213713 | > COUPLING PROTECTOR FT85/100 HELIX KIT | 1 |
| 4 | 4159708 | COUPLING D.16XD.19 FT100 HELIX KIT | 1 |
| 6 | 4177803 | STUD BOLT M12X263 KIT | 1 |
| 6.1 | | > TIE BOLT M12-263x18x30-1.4057 | 1 |
| 6.2 | 2094647 | > NUT M12 M12 ISO4032 VP. | 1 |
| 6.3 | 2123557 | > WASHER CS-12.4-24-1.6-NFE25 (4 PIECES) | 1 |
| 7 | 4214481 | STATIONARY RING HOLDER HELIX D27 ReDTC | 1 |
| 7.2 | 4214479 | > STATIONARY RING HOLDER HELIX D27 VP. | 1 |
| 7.3 | 4176513 | > O-RING FOR PUMP JACKET VP. | 1 |
| 8 | 4212724 | FILING/PURGING PLUG HELIX ReDTC KIT | 1 |
| 8.1 | | > FILLING PLUG MVI6"-304 | 1 |
| 8.2 | 4177800 | > O-RING EPDM PLUG HELIX VP. | 1 |
| 9 | 4214483 | MECH.SEAL HELIX6-10-16 O/E ReDTC KIT | 1 |
| 9.1 | 4177801 | > MECH.SEAL HELIX6-10-16 O/E VP. | 1 |
| 7.3 | 4176513 | > O-RING FOR PUMP JACKET VP. | 1 |
| 10 | 4177804 | HOUSING PIPES D.152X134 1.4301 KIT | 1 |
| 7.3 | 4176513 | > O-RING FOR PUMP JACKET VP. | 1 |
| 10.1 | | > HOUSING-PIPE Ø152-M+1001/02-304 | 1 |
| 11 | 4174087 | CENTERING STAGE-RETURN HELIX6 1.4301VP. | 1 |
| 12 | 4214486 | SHAFT EQUIPMENT HELIX V6 ReDTC KIT | 1 |
| 12.1 | | > NUT-H-M10-A4.70 | 1 |
| 12.2 | | > SERRATED LOCK WASHER M+6M3-316L | 1 |
| 12.3 | | > 1/2-SNAP-RING-6/10M3-316L | 1 |
| 12.4 | | > STOP-RUSH-1/2-D16xd2-M+316 | 1 |
| 4.11 | | > SCREW CHC-M6X14-8.8-ISO4762-GEOMET500A | 1 |
| 4.12 | | > WASHER D.24 L6U ZINK | 1 |
| 13 | | HYDRAULIC HELIX V 602 1.4307 | 1 |

| Item | Article no. | Description | Quantity |
|---|---|---|---|
| 14 | 4214488 | SHAFT D.16X203 HELIX 1.4057 VP. | 1 |
| 15 | 4217897 | PUMP HOUSING HELIX DN32 PN16 1.4301 KIT | 1 |
| 7.3 | 4176513 | > O-RING FOR PUMP JACKET VP. | 1 |
| 15.1 | | > BLASTING PPE HOUSING V-PN16-DN32-5"-304 | 1 |
| 15.2 | 4217891 | > COUNTER FLANGE-G1"1/4-PN16-GJL KIT | 1 |
| 15.3 | 4171321 | > PRIMING/DRAIN PLUG EPDM HELIX KIT | 1 |
| 16 | 4177964 | BASEPLATE HELIX V2/4/6 PN16 VP. | 1 |

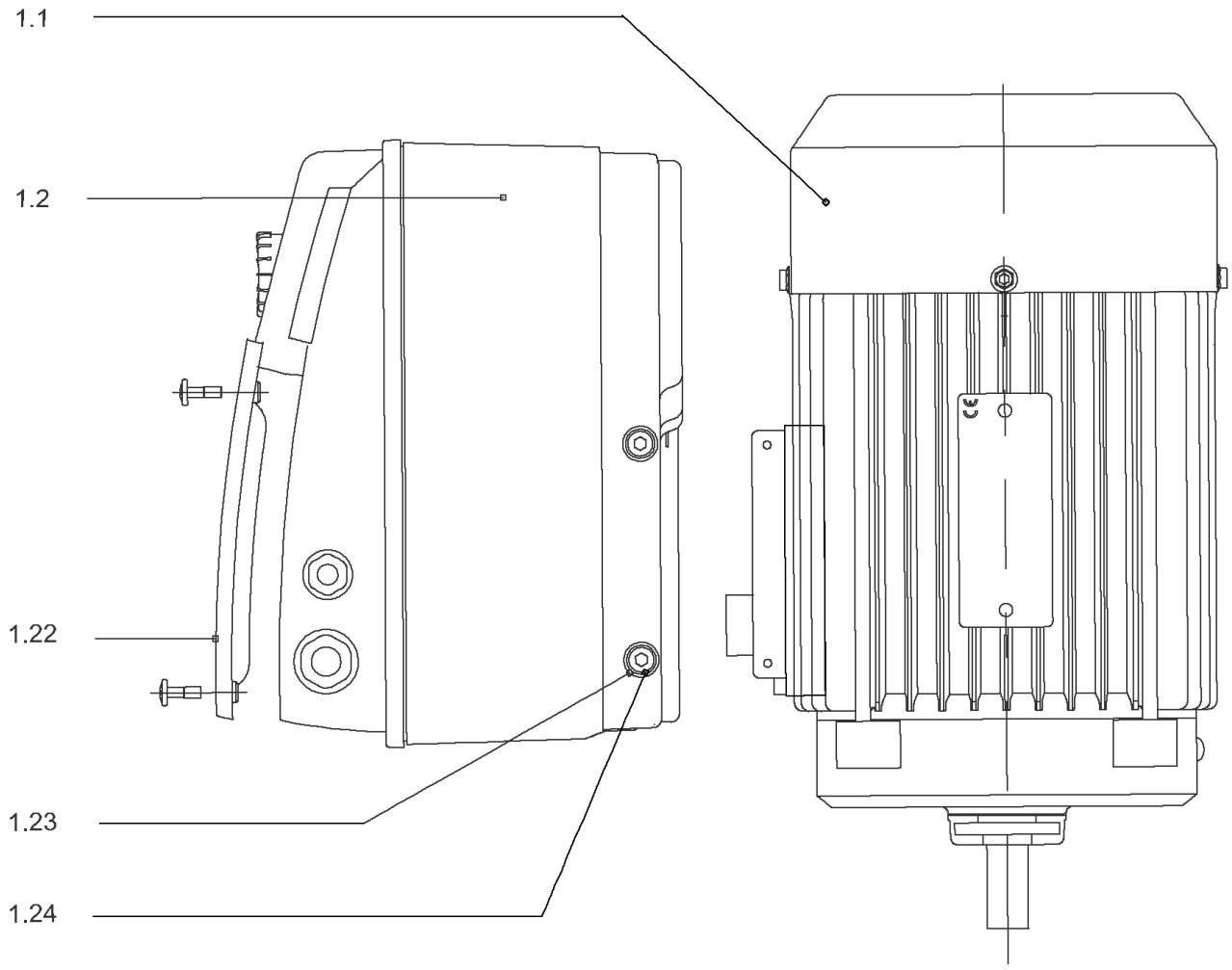
1.1
1.2
1.22
1.23
1.24

## DRIVE HELIX-VE602-IE4-WE KIT

| Item | Article no. | Description | Quantity |
|---|---|---|---|
| 1.1 | 4207914 | MOTOR 0.75/2/80 3~ 380V 60HZ IE4 WE VP. | 1 |
| | | SPARE PARTS MOTOR:ON REQUEST | 1 |
| 1.2 | 4209323 | MODULE HELIX-VE602-IE4-WE KIT | 1 |
| 1.22 | 2054372 | > MODULE COVER TL1,TL2+GASKET KIT | 1 |
| 1.23 | 4215716 | > SCREW M5X16 DIN912 8.8 A2A (4pieces) VP. | 1 |
| 1.24 | 2057978 | > RONDELLE A5,3 DIN6797 FST ZN (4 PIECES) | 1 |

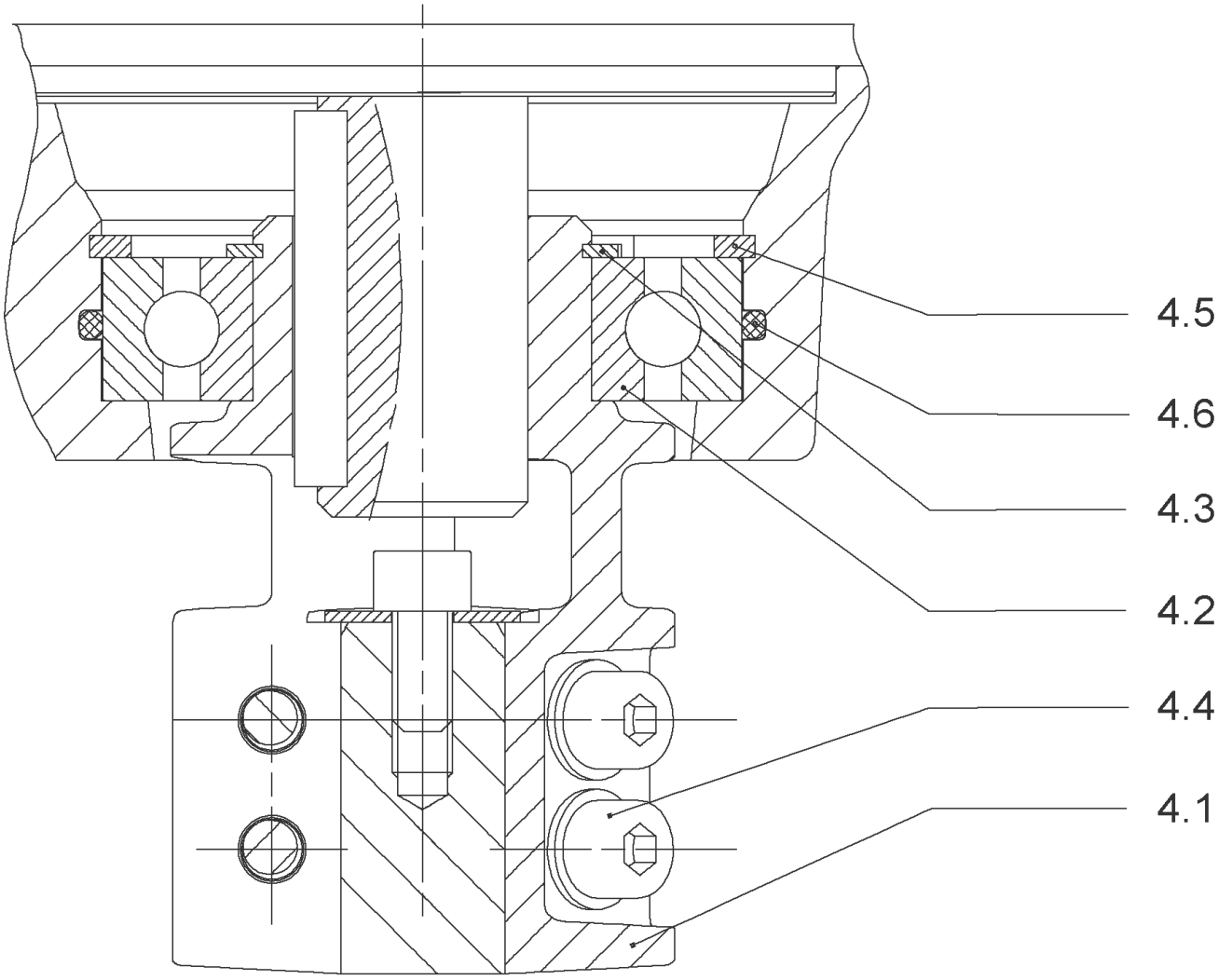
4.5
4.6
4.3
4.2
4.4
4.1

## COUPLING D.16XD.19 FT100 HELIX KIT (4159708)

| Item | Article no. | Description | Quantity |
|---|---|---|---|
| 4.1 | | COUPLING M+ Ø16XØ19 FT100 MACHINED | 1 |
| 4.2 | 2130977 | BALL BEARING 6206/ZZ-C3(HT)VP. | 1 |
| 4.3 | 4234249 | CIRCLIP-FOR-SHAFT-D30x1.5 VP. | 1 |
| 4.4 | 4212716 | SCREW M6X20 KIT (4PIECES) | 1 |
| 4.5 | 4234250 | CIRCLIP-D62x2 VP. | 1 |
| 4.6 | 4234245 | O-RING 63X3 VP. | 1 |
| | | CONTACT-WASHER-6ETR-6,1x12,2x1,8-STEEL | 1 |

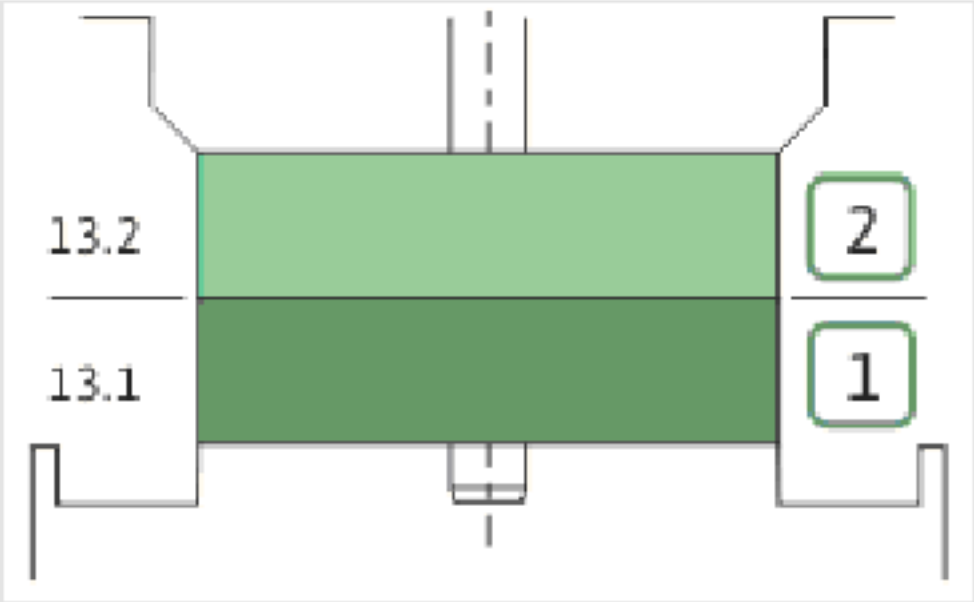
13.2
13.1
2
1

| Item | Article no. | Description | Quantity |
|---|---|---|---|
| 13.1 | 4174084 | STAGE HELIX 6 1.4301 KIT | 1 |
| | | > MACH.STG-CASING-WOGV-WNR-M+6-304 | 1 |
| | | > IMPELLER-M+6-304 | 1 |
| 13.2 | 4174089 | INTERMEDIATE STAGE HELIX 6 1.4301 KIT | 1 |
| | | > MACH.BEARING-STG-CASING-WNR-M+6-304 | 1 |
| | | > IMPELLER-M+6-304 | 1 |
| | | > SHAFT SLEEVE-SPACER-Ø19,35x18,465-304 | 1 |
| | | > SHAFT-SLEEVE-D16xD20x18-CW | 1 |

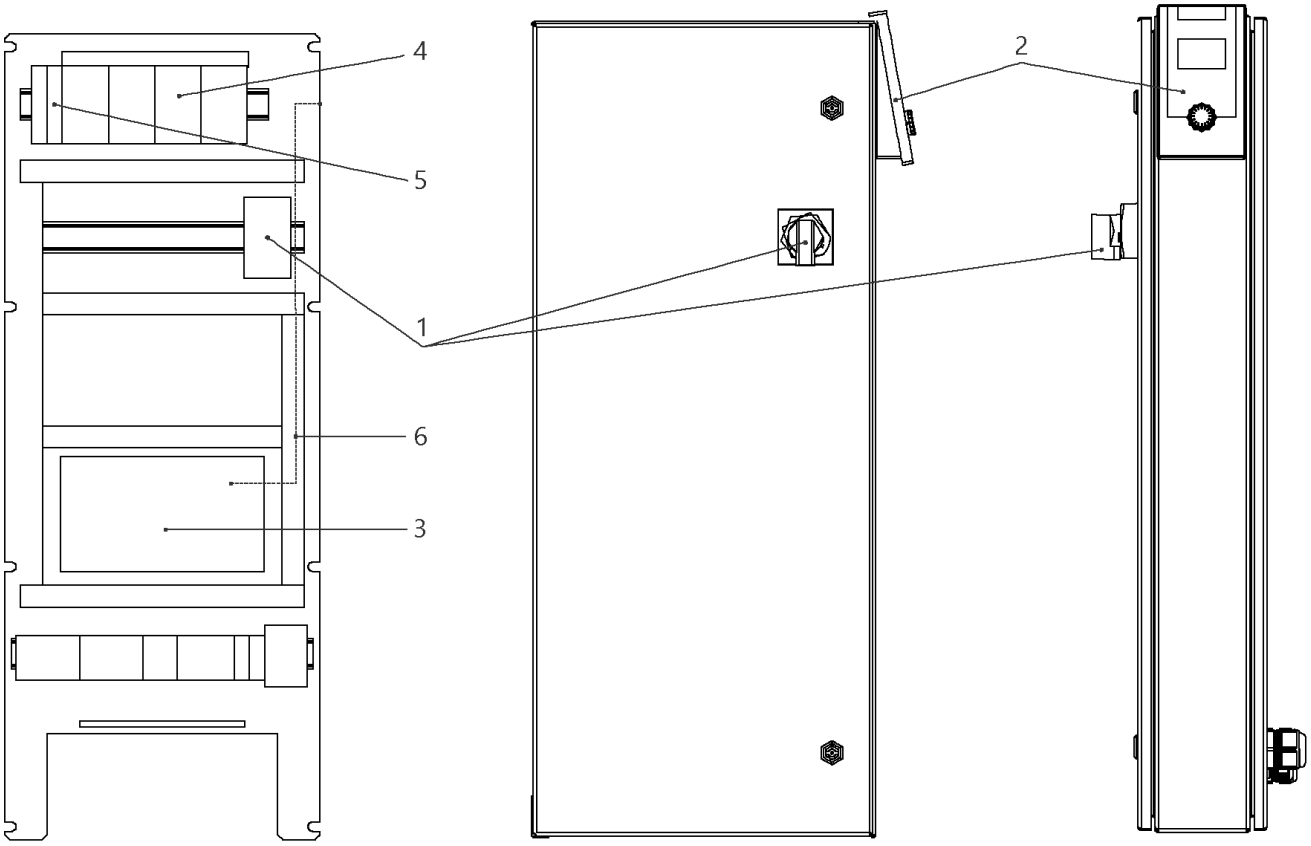
4
5
1
6
3
2

## W-CTRL-SCE-B-2x0,55-1,5KW-T4-FM-ND1

| Item | Article no. | Description | Quantity |
|---|---|---|---|
| 1 | 2104470 | MAIN SWITCH OT40F3 L250 KIT | 1 |
| 2 | 4184784 | CONTROL PANEL HMI SC KIT | 1 |
| 2 | 4185259 | ASSEMBLY DISPLAY SC PKG VP. | 1 |
| 3 | 4185257 | ASSEMBLY CPU SCe Booster VP. | 1 |
| 4 | 2051217 | AUTOM.CIRCUIT BREAKER S203 B16 TO7,5kW | 1 |
| 5 | 2046288 | CIRCUIT BREAKER S201 B16 | 1 |
| 6 | 4197081 | CABLE RJ45 CAT6 0,5M RED SC-PANEL VP. | 1 |

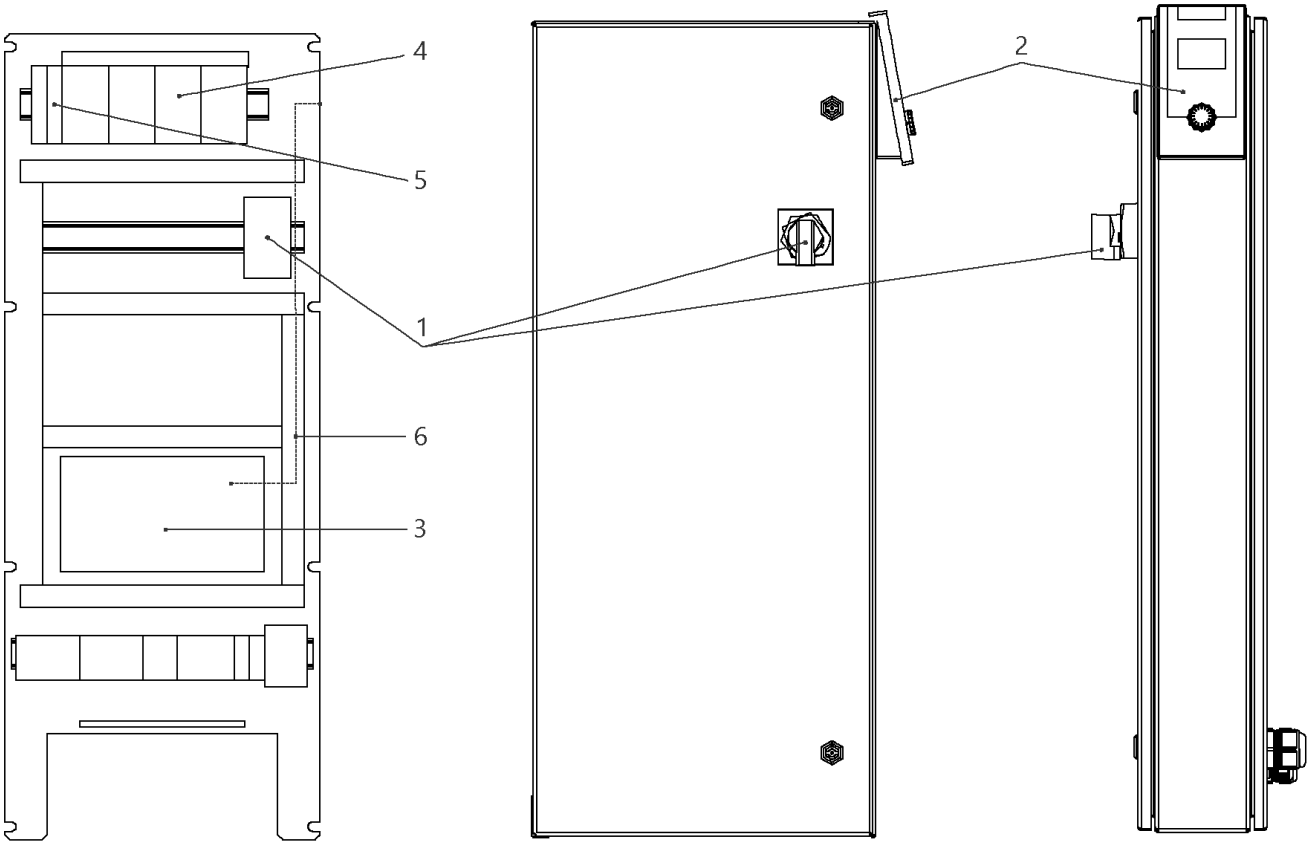
4
5
1
6
3
2

## W-CTRL-SCE-B-2x10A-T34-FM-ND1-AVC-PKG (2541913)

| Item | Article no. | Description | Quantity |
|---|---|---|---|
| 1 | 2104470 | MAIN SWITCH OT40F3 L250 KIT | 1 |
| 2 | 4184784 | CONTROL PANEL HMI SC KIT | 1 |
| 2 | 4185259 | ASSEMBLY DISPLAY SC PKG VP. | 1 |
| Note: DISPLAY ALONE / PLATINE SEULE | | | |
| 3 | 4185257 | ASSEMBLY CPU SCe Booster VP. | 1 |
| 4 | 2119861 | AUTOMATIC CIRCUIT BREAKER S203 B13 3POL. | 1 |
| 5 | 2046288 | CIRCUIT BREAKER S201 B16 | 1 |
| 6 | 4197081 | CABLE RJ45 CAT6 0,5M RED SC-PANEL VP. | 1 |

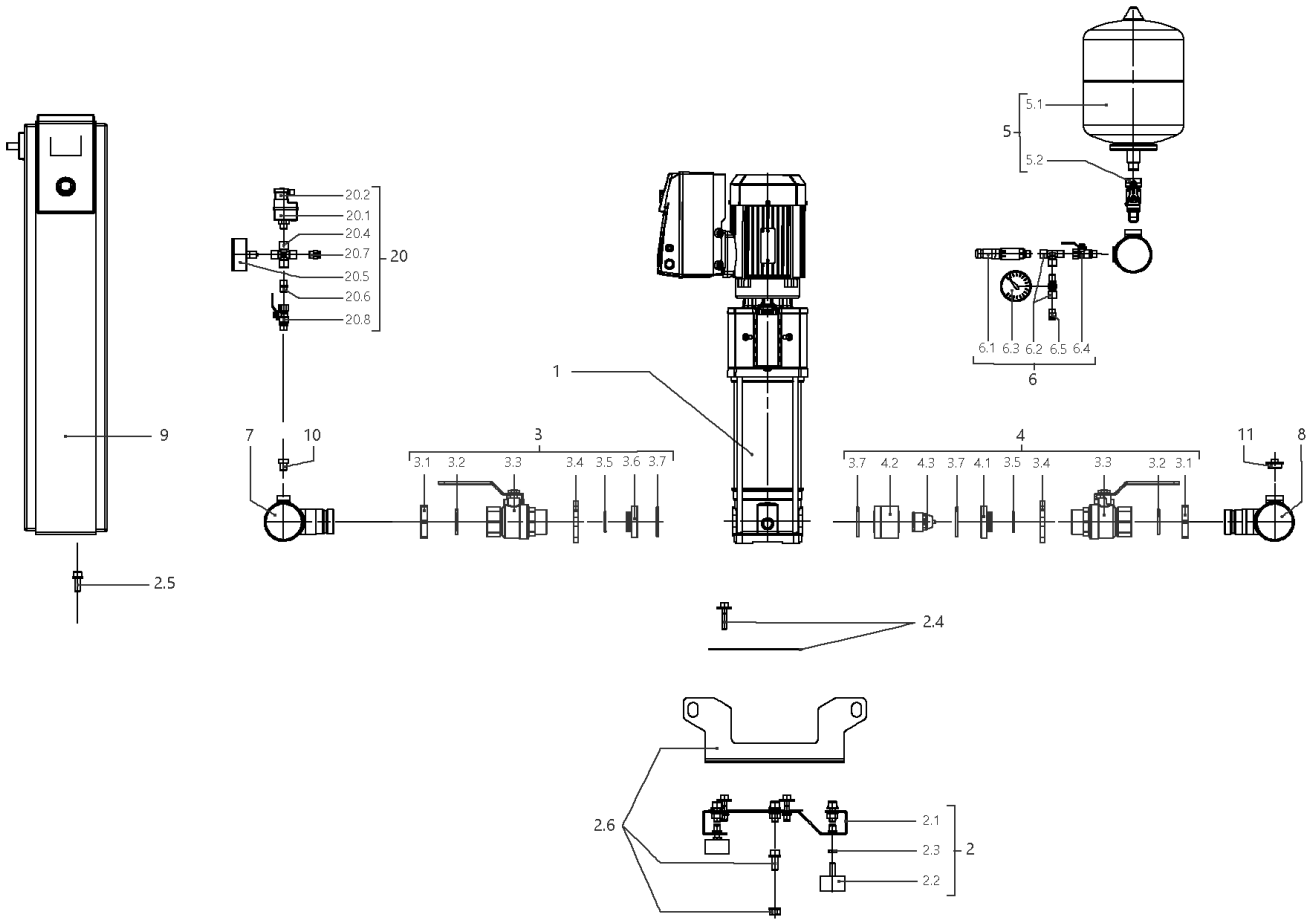
5.1
5
5.2
20.2
20.1
20.4
20.7
20
20.5
20.6
20.8
6.1 6.3 6.2 6.5 6.4
6
1
9
7
10
3
3.1 3.2 3.3 3.4 3.5 3.6 3.7
4
3.7 4.2 4.3 3.7 4.1 3.5 3.4 3.3 3.2 3.1
11
8
2.5
2.4
2.6
2.1
2.3
2
2.2

## SiBoost Smart 2HELIX VE603 (2536372)

| Item | Article no. | Description | Quantity |
|---|---|---|---|
| 1 | | HELIX VE603-1/16/E/S | 1 |
| Note: TO / BIS / JUSQU'AU 31/03/2016 | | | |
| 1 | 4201579 | HELIX VE603-1/16/E/S | 1 |
| Note: FROM / AB / À PARTIR DU 01/04/2016 | | | |
| 2 | 4200135 | BASE PLATE DE2 850x420 KIT | 1 |
| Note: TO / BIS / JUSQU'AU 28/02/2013 | | | |
| 2.1 | | > BASEPLATE_2x4/6/10/16V_E300_BOX_150 | 1 |
| 2.2 | 2028654 | > VIBRATION DAMPER D.50X30 M10X28 | 1 |
| 2.3 | 2028281 | > NUT M10 DIN936 (ISO4035) 17H VZ | 1 |
| 2.4 | 4199875 | > HOLDER PUMP Siboost Helix V2/4 KIT | 1 |
| 2.5 | 4197084 | > HOLDER SWITCHBOX WILO Smart Control KIT | 1 |
| 2.6 | 4197117 | > LIFTING Siboost HELIX SC KIT | 1 |
| 2 | 4199874 | BASE PLATE DE2 850x300 M10 KIT | 1 |
| Note: FROM / AB / À PARTIR DU 01/03/2013 | | | |
| 2.1 | | > BASEPLATE_2x4/6/10V_E300_850x300_BOX_150 | 1 |
| 2.2 | 2028654 | > VIBRATION DAMPER D.50X30 M10X28 | 1 |
| 2.3 | 2028281 | > NUT M10 DIN936 (ISO4035) 17H VZ | 1 |
| 2.4 | 4199875 | > HOLDER PUMP Siboost Helix V2/4 KIT | 1 |
| 2.5 | 4197084 | > HOLDER SWITCHBOX WILO Smart Control KIT | 1 |
| 2.6 | 4197085 | > LIFTING Siboost HELIX SC KIT | 1 |
| 3 | 4199876 | SUCTION SIDE Siboost Helix V2/4/6 KIT | 1 |
| 3.1 | 2032610 | > NUT G11/4 MS VP. | 1 |
| 3.2 | 2032611 | > O-RING ID.36,09X3,53N DIN3771 E7502 | 1 |
| 3.3 | 2507646 | > BALL VALVE G11/4"M-F-W.HANDLE 1/4-TURN | 1 |
| 3.4 | 2032613 | > SCREWED FLANGE G1 1/4" LK-75 ST37VZ | 1 |
| 3.5 | 2032614 | > O-RING ID.29,82X2,62N DIN3771 E7502 | 1 |
| 3.6 | 2032615 | > SPACER F.I/A KUH.DN32 CUZN | 1 |
| 3.7 | 2032616 | > O-RING ID.44X3,53N DIN3771 E7502 | 1 |
| 4 | 4199877 | DELIVERY SIDE Siboost Helix V2/4/6 KIT | 1 |
| 3.1 | 2032610 | > NUT G11/4 MS VP. | 1 |
| 3.2 | 2032611 | > O-RING ID.36,09X3,53N DIN3771 E7502 | 1 |
| 3.3 | 2507646 | > BALL VALVE G11/4"M-F-W.HANDLE 1/4-TURN | 1 |
| 3.4 | 2032613 | > SCREWED FLANGE G1 1/4" LK-75 ST37VZ | 1 |
| 3.5 | 2032614 | > O-RING ID.29,82X2,62N DIN3771 E7502 | 1 |

| Item | Article no. | Description | Quantity |
|---|---|---|---|
| 4.1 | 2058116 | > SPACER F.I/A KUH.DN32 CUZN | 1 |
| 3.7 | 2032616 | > O-RING ID.44X3,53N DIN3771 E7502 | 1 |
| 4.2 | 2058115 | > HOUSING RFV(RV-IN) DN32 SGS/DRS | 1 |
| 4.3 | 2027870 | > NON-RETURN-DEVICE INSERT DN32(MTR) | 1 |
| 5 | 2032642 | DIAPHREM TANK 8L/PN16 DIN4807/T5 KIT | 1 |
| 5.1 | 2045914 | > DIAPHREM TANK 8L TYP-DD 16BAR | 1 |
| 5.2 | 2027853 | > FLOW FITTING G3/4 FOR DIAPHRAGM VES. | 1 |
| 6 | 4197076 | PRESSURE SENSOR/ GAUGE 0-16BAR KIT | 1 |
| 6.1 | 2085909 | > PRESS.SENSOR 1/4" 0-16BAR 4-20MA VP. | 1 |
| 6.2 | 4197077 | > T-PIECE 1/4" VP. | 1 |
| 6.3 | 2028692 | > PRESSURE GAUGE NG63-PN16-G1/4 | 1 |
| 6.4 | 2028291 | > BALL TAP R1/4" PN42 GIACOMINI R254DL | 1 |
| 6.5 | 2028691 | > BLOWGUN 1/4" MS 30BAR VP. | 1 |
| 7 | 4200092 | PIPE DE2 2''-2x1"1/4+1x1/4x600 VP. | 1 |
| 8 | 4200093 | PIPE DE2 2''-2x11/4"+1x1/4+1x3/4x600 VP. | 1 |
| 9 | | W-CTRL-SCE-B-2x1,1KW-T4-FM-ND2 | 1 |
| Note: TO / BIS / JUSQU'AU 28/02/2013 | | | |
| 9 | | W-CTRL-SCE-B-2x0,55-1,5KW-T4-FM-ND1 | 1 |
| Note: FROM / AB / À PARTIR DU 01/03/2013 - TO / BIS / JUSQU'AU 18/05/2014 | | | |
| 9 | 2541913 | W-CTRL-SCE-B-2x10A-T34-FM-ND1-AVC-PKG | 1 |
| Note: FROM / AB / À PARTIR DU 19/05/2014 | | | |
| 10 | 4197079 | PLUG G1/4"x10 AISI304 KIT | 1 |
| 11 | 2032654 | PLUG R3/4" MS VIEGA 1751 | 1 |
| 20 | 2521150 | ASSEMBLY WMS. DE-EB. +VP | 1 |
| 20.1 | 2028652 | > PRESSURE SWITCH PS3-ASR 1/(1,3) VP. | 1 |
| 20.2 | 2130983 | > PLUG PS3-415 WITH KABEL 1,5M 2NO VP. | 1 |
| 20.4 | 2028290 | > CROSSPIECE R1/4" MS-NICKEL | 1 |
| 20.5 | 2028687 | > PRESSURE GAUGE NG63 R1/4" HI.0-6BAR | 1 |
| 20.6 | 2054268 | > DUAL NIPPLE G1/4" x G1/4" MS VP. | 1 |
| 20.7 | 2028691 | > BLOWGUN 1/4" MS 30BAR VP. | 1 |
| 20.8 | 2028291 | > BALL TAP R1/4" PN42 GIACOMINI R254DL | 1 |

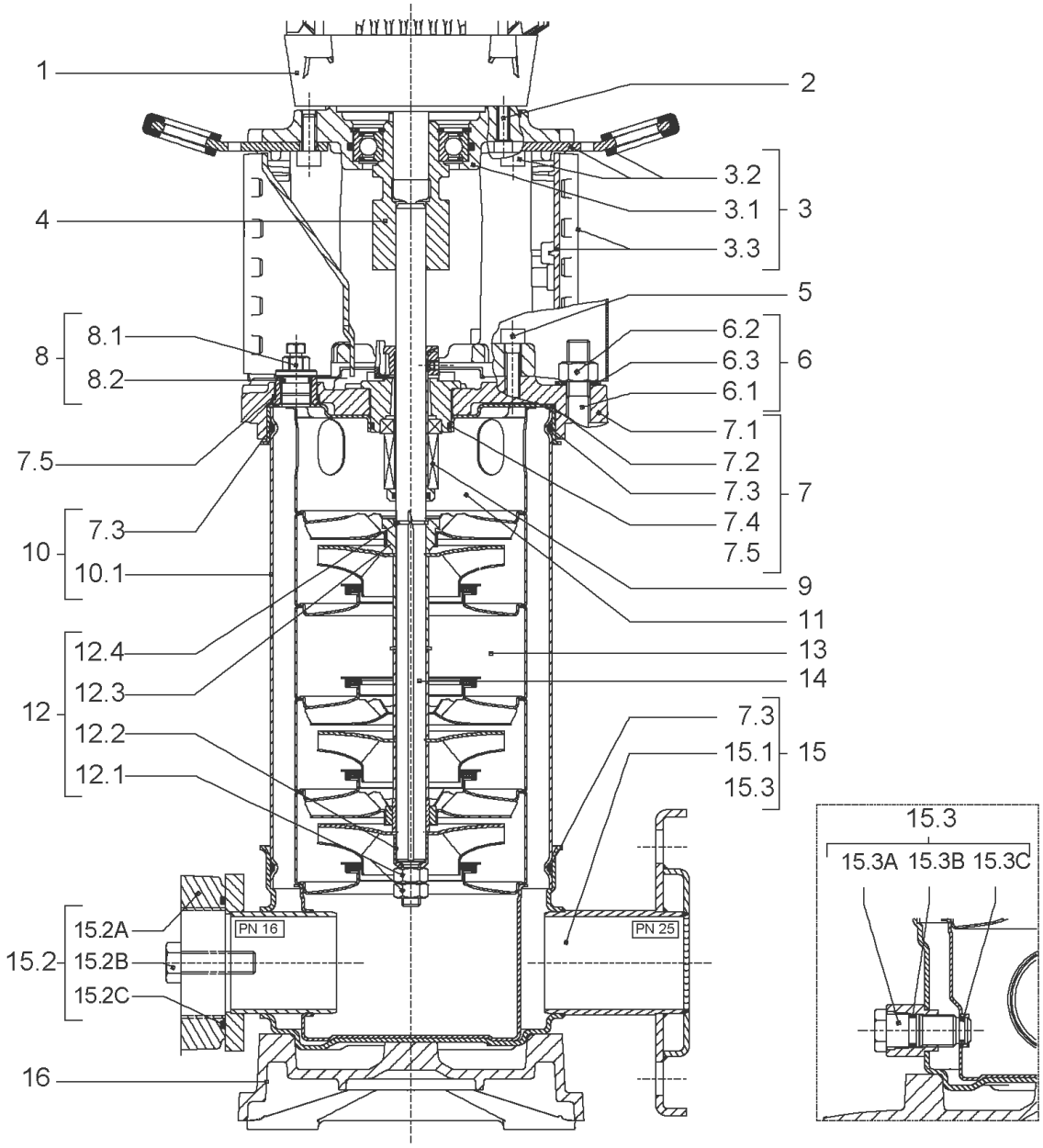
1
2
3.2
3.1
3
3.3
4
5
8.1
8
8.2
6.2
6.3
6
6.1
7.1
7.5
7.2
7.3
7
7.4
7.3
10
7.5
10.1
9
11
12.4
13
12.3
14
12
12.2
7.3
15.1
15
12.1
15.3
15.3
15.3A 15.3B 15.3C
15.2A
PN 16
PN 25
15.2
15.2B
15.2C
16

| Item | Article no. | Description | Quantity |
|---|---|---|---|
| 1 | | DRIVE HELIX-VE603-IE2-WE KIT | 1 |
| Note: MOTOR BRAND WILO ELEC | | | |
| 1 | | DRIVE HELIX-VE603-IE4-WE KIT | 1 |
| Note: MOTOR BRAND WILO ELEC | | | |
| 2 | 4159702 | SCREW M6X30 (4 PIECES) | 1 |
| 3 | 4172790 | EQUIPED LANTERN NEXIS FT 100 KIT | 1 |
| 3.1 | | > M+5_6_LANTERN_ONE-PIECE_FT100_CATA | 1 |
| 3.2 | 2127604 | > EYELET CPL.FT HELIX(2 PIECES) | 1 |
| 3.3 | 4159692 | > COUPLING PROTECTOR FT HELIX KIT | 1 |
| 4 | 4159708 | COUPLING D.16XD.19 FT100 HELIX KIT | 1 |
| 5 | 4159707 | SCREW M8X30 (4 PIECES) | 1 |
| 6 | 4177812 | STUD BOLT M12X300KIT | 1 |
| 6.1 | | > TIE BOLT M12-300x18x30-1.4057 | 1 |
| 6.2 | 2094647 | > NUT M12 M12 ISO4032 VP. | 1 |
| 6.3 | 2123557 | > WASHER CS-12.4-24-1.6-NFE25 (4 PIECES) | 1 |
| 7 | 4210143 | STATIONARY RING HOLDER HELIX 6" EPDM | 1 |
| 7.2 | 2127607 | > STATIONARY RING HOLDER 6" HELIX 1.4301 V | 1 |
| 7.3 | 4176513 | > O-RING FOR PUMP JACKET VP. | 1 |
| 7.4 | 2127603 | > O-RING ID.37,6x2,4 EPDM VP. | 1 |
| 7.5 | 2127602 | > O-RING ID.21,35x2 EPDM VP. | 1 |
| 8 | 4159686 | FILING/PURGING PLUG HELIX EPDM KIT | 1 |
| 9 | 4171327 | SEAL-KIT-HELIX6-10-16 O/E KIT | 1 |
| 10 | 4177813 | HOUSING PIPE D.152x172 1.4301 KIT | 1 |
| 7.3 | 4176513 | > O-RING FOR PUMP JACKET VP. | 1 |
| 10.1 | | > HOUSING-PIPE Ø152-M+1003-304 | 1 |
| 11 | 4174087 | CENTERING STAGE-RETURN HELIX6 1.4301VP. | 1 |
| 12 | 4174086 | SHAFTS EQUIPMENT HELIX V6 MONOBLOC KIT | 1 |
| 12.1 | | > NUT-H-M10-A4.70 | 1 |
| 12.2 | | > SERRATED LOCK WASHER M+6M3-316L | 1 |
| 12.3 | | > IMPELLER STOP RING L33,2-304 | 1 |
| 12.4 | | > STOP-RUSH-1/2-D16xd2-M+316 | 1 |
| 13 | | HYDRAULIC HELIX V 603 1.4307 | 1 |
| 14 | 4177815 | SHAFT D.16X292,5 1.4301 VP. | 1 |
| 15 | 4217897 | PUMP HOUSING HELIX DN32 PN16 1.4301 KIT | 1 |

| Item | Article no. | Description | Quantity |
|---|---|---|---|
| 7.3 | 4176513 | > O-RING FOR PUMP JACKET VP. | 1 |
| 15.1 | | > BLASTING PPE HOUSING V-PN16-DN32-5"-304 | 1 |
| 15.2 | 4217891 | > COUNTER FLANGE-G1"1/4-PN16-GJL KIT | 1 |
| 15.3 | 4171321 | > PRIMING/DRAIN PLUG EPDM HELIX KIT | 1 |
| 16 | 4177964 | BASEPLATE HELIX V2/4/6 PN16 VP. | 1 |

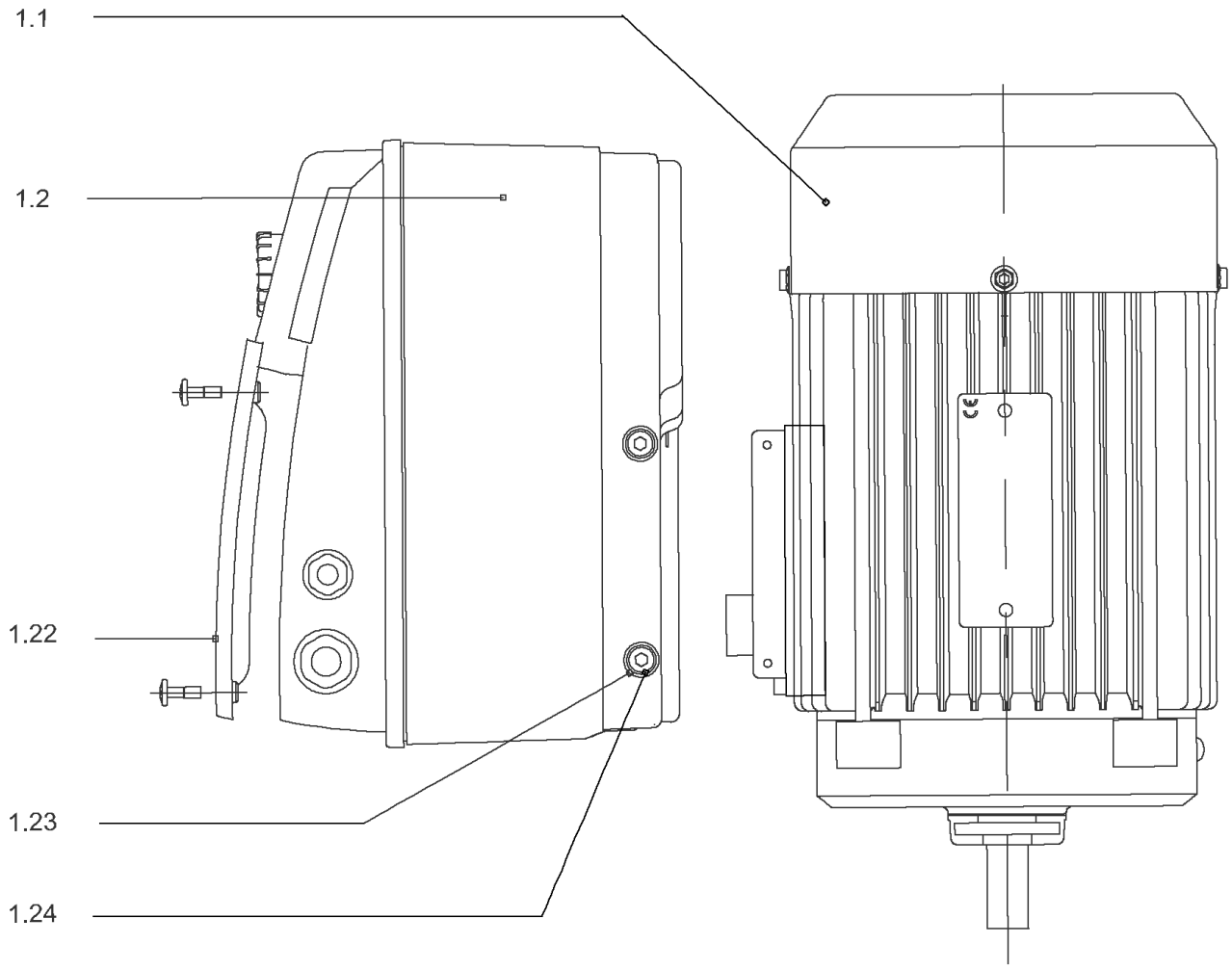
1.1
1.2
1.22
1.23
1.24

## DRIVE HELIX-VE603-IE2-WE KIT

| Item | Article no. | Description | Quantity |
|---|---|---|---|
| 1.1 | 4184817 | MOTOR 1,1/2/80 3~ 380V 60HZ IE2 WE VP. | 1 |
| | | SPARE PARTS MOTOR:ON REQUEST | 1 |
| 1.2 | 4186766 | MODULE HELIX-VE603-IE2-WE KIT | 1 |
| 1.22 | 2054372 | > MODULE COVER TL1,TL2+GASKET KIT | 1 |
| 1.23 | 4215716 | > SCREW M5X16 DIN912 8.8 A2A (4pieces) VP. | 1 |
| 1.24 | 2057978 | > RONDELLE A5,3 DIN6797 FST ZN (4 PIECES) | 1 |

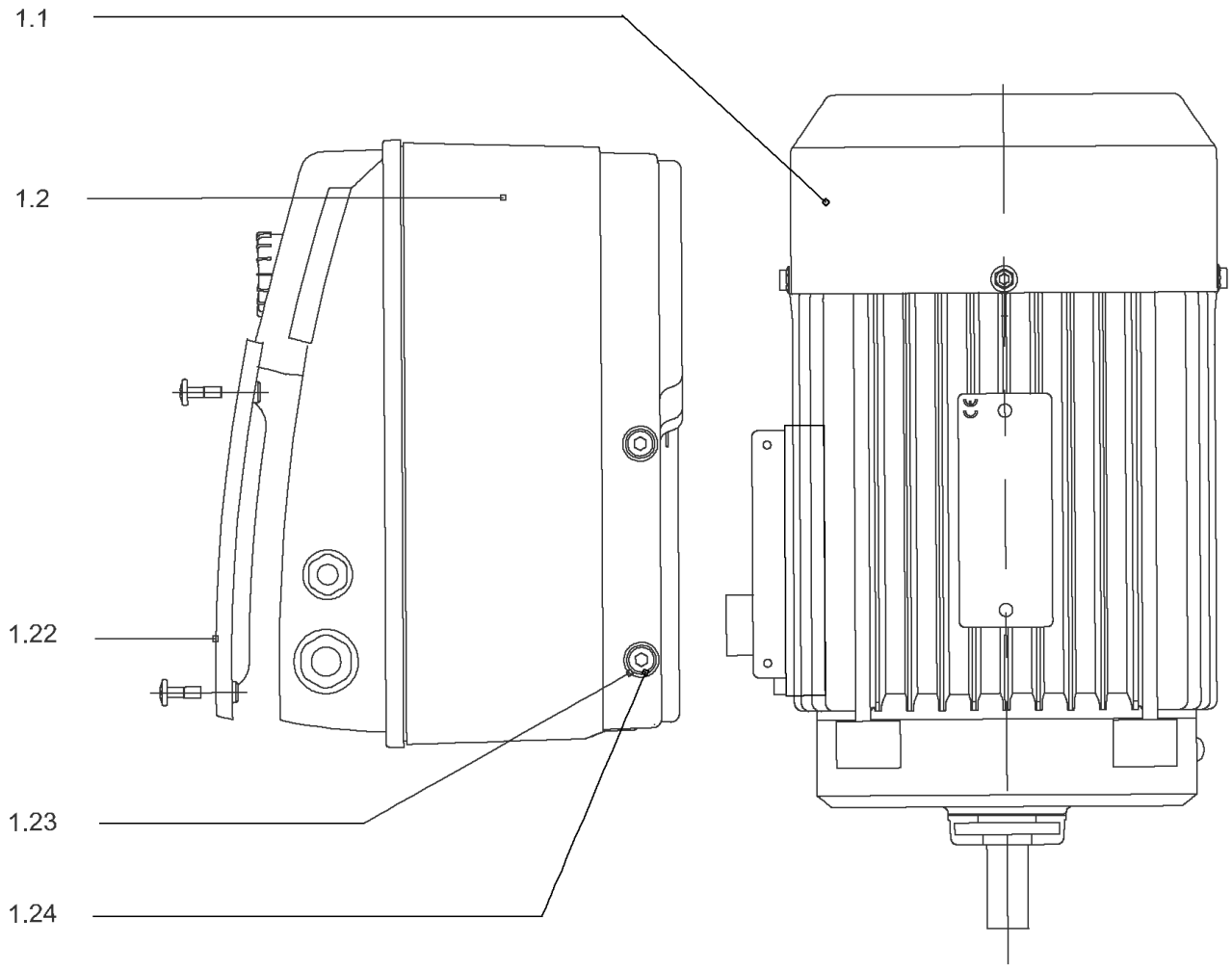
1.1
1.2
1.22
1.23
1.24

## DRIVE HELIX-VE603-IE4-WE KIT

| Item | Article no. | Description | Quantity |
|---|---|---|---|
| 1.1 | 4207916 | MOTOR 1.1/2/80 3~ 380V 60HZ IE4 WE VP. | 1 |
| | | SPARE PARTS MOTOR:ON REQUEST | 1 |
| 1.2 | 4209599 | MODULE HELIX-VE603-IE4-WE KIT | 1 |
| 1.22 | 2054372 | > MODULE COVER TL1,TL2+GASKET KIT | 1 |
| 1.23 | 4215716 | > SCREW M5X16 DIN912 8.8 A2A (4pieces) VP. | 1 |
| 1.24 | 2057978 | > RONDELLE A5,3 DIN6797 FST ZN (4 PIECES) | 1 |

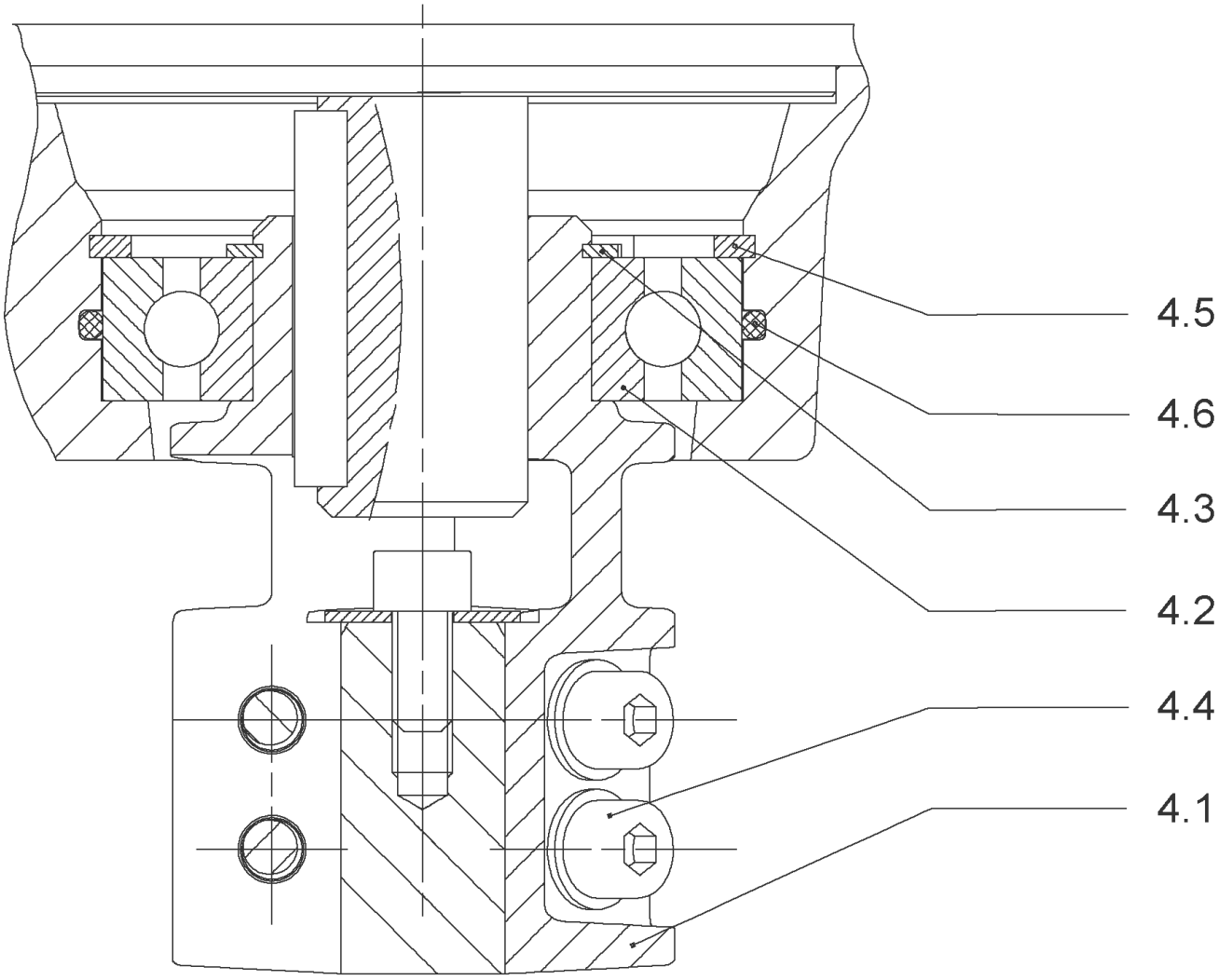
4.5
4.6
4.3
4.2
4.4
4.1

## COUPLING D.16XD.19 FT100 HELIX KIT (4159708)

| Item | Article no. | Description | Quantity |
|---|---|---|---|
| 4.1 | | COUPLING M+ Ø16XØ19 FT100 MACHINED | 1 |
| 4.2 | 2130977 | BALL BEARING 6206/ZZ-C3(HT)VP. | 1 |
| 4.3 | 4234249 | CIRCLIP-FOR-SHAFT-D30x1.5 VP. | 1 |
| 4.4 | 4212716 | SCREW M6X20 KIT (4PIECES) | 1 |
| 4.5 | 4234250 | CIRCLIP-D62x2 VP. | 1 |
| 4.6 | 4234245 | O-RING 63X3 VP. | 1 |
| | | CONTACT-WASHER-6ETR-6,1x12,2x1,8-STEEL | 1 |

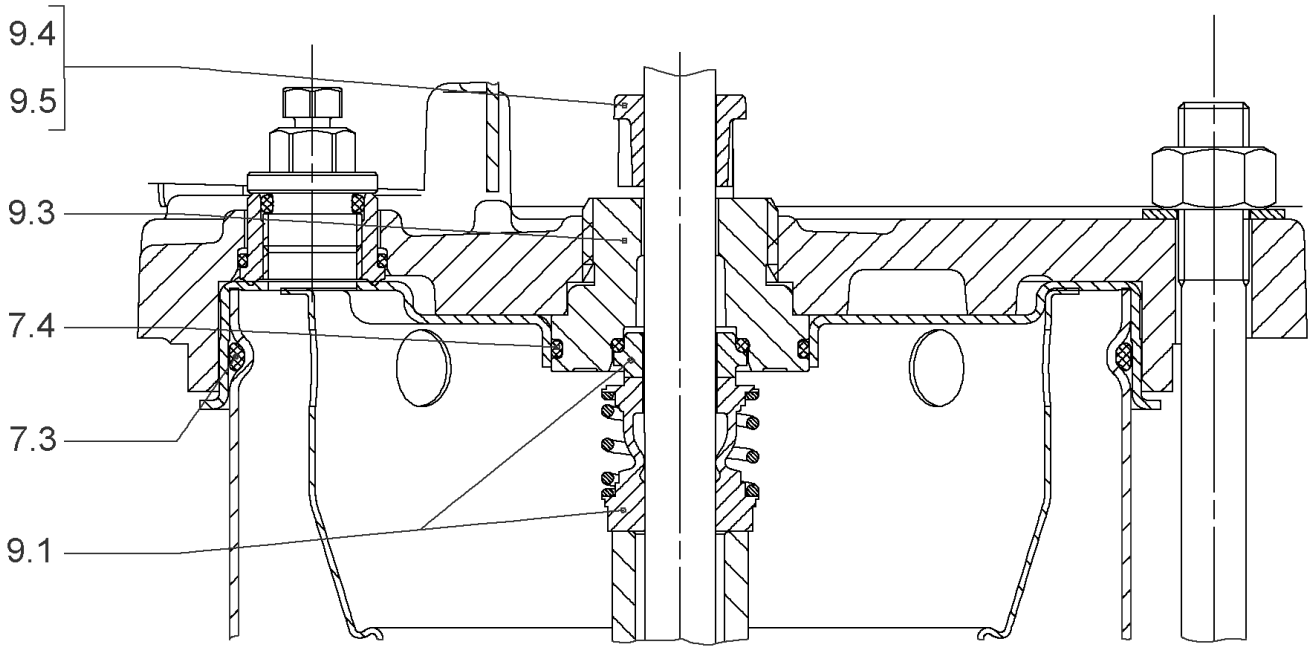
9.4
9.5
9.3
7.4
7.3
9.1

## SEAL-KIT-HELIX6-10-16 O/E KIT (4171327)

| Item | Article no. | Description | Quantity |
|---|---|---|---|
| 7.3 | 4176513 | O-RING FOR PUMP JACKET VP. | 1 |
| 7.4 | 2127603 | O-RING ID.37,6x2,4 EPDM VP. | 1 |
| 9.1 | 4177801 | MECH.SEAL HELIX6-10-16 O/E VP. | 1 |
| 9.3 | 4177798 | MACHINED RING HOLDER M+6" Ø16 304 VP. | 1 |
| 9.5 | 4177799 | MACHINED DRIVE RING Ø16 VP. | 1 |
| 9.4 | 4176520 | SCREW CH M5x5 A4-70 ( 3PIECES ) | 1 |

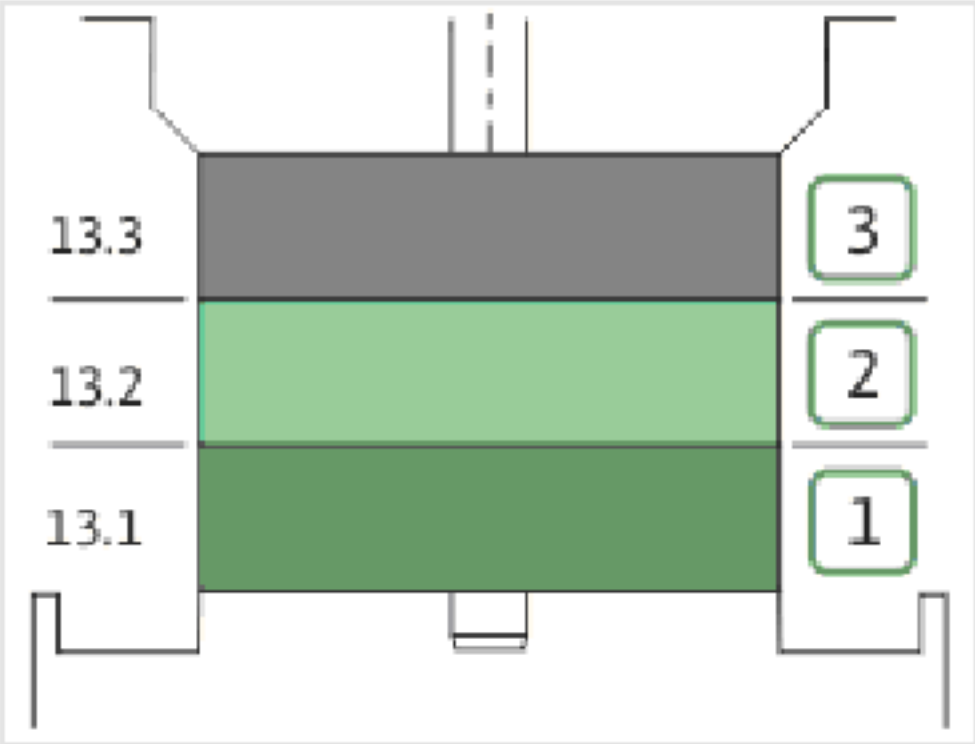
13.3
13.2
13.1
3
2
1

| Item | Article no. | Description | Quantity |
|---|---|---|---|
| 13.1 | 4174084 | STAGE HELIX 6 1.4301 KIT | 1 |
| | | > MACH.STG-CASING-WOGV-WNR-M+6-304 | 1 |
| | | > IMPELLER-M+6-304 | 1 |
| 13.2 | 4174089 | INTERMEDIATE STAGE HELIX 6 1.4301 KIT | 1 |
| | | > MACH.BEARING-STG-CASING-WNR-M+6-304 | 1 |
| | | > IMPELLER-M+6-304 | 1 |
| | | > SHAFT SLEEVE-SPACER-Ø19,35x18,465-304 | 1 |
| | | > SHAFT-SLEEVE-D16xD20x18-CW | 1 |
| 13.3 | 4174090 | INTERMEDIATE STAGE HELIX 6 1.4301 KIT | 1 |
| | | > MACH.STD-STG-CASING-WGV+NR-M+6-304 | 1 |
| | | > IMPELLER-M+6-304 | 1 |
| | | > IMPELLER SPACER Ø16,05X19,45-L36,465-304 | 1 |

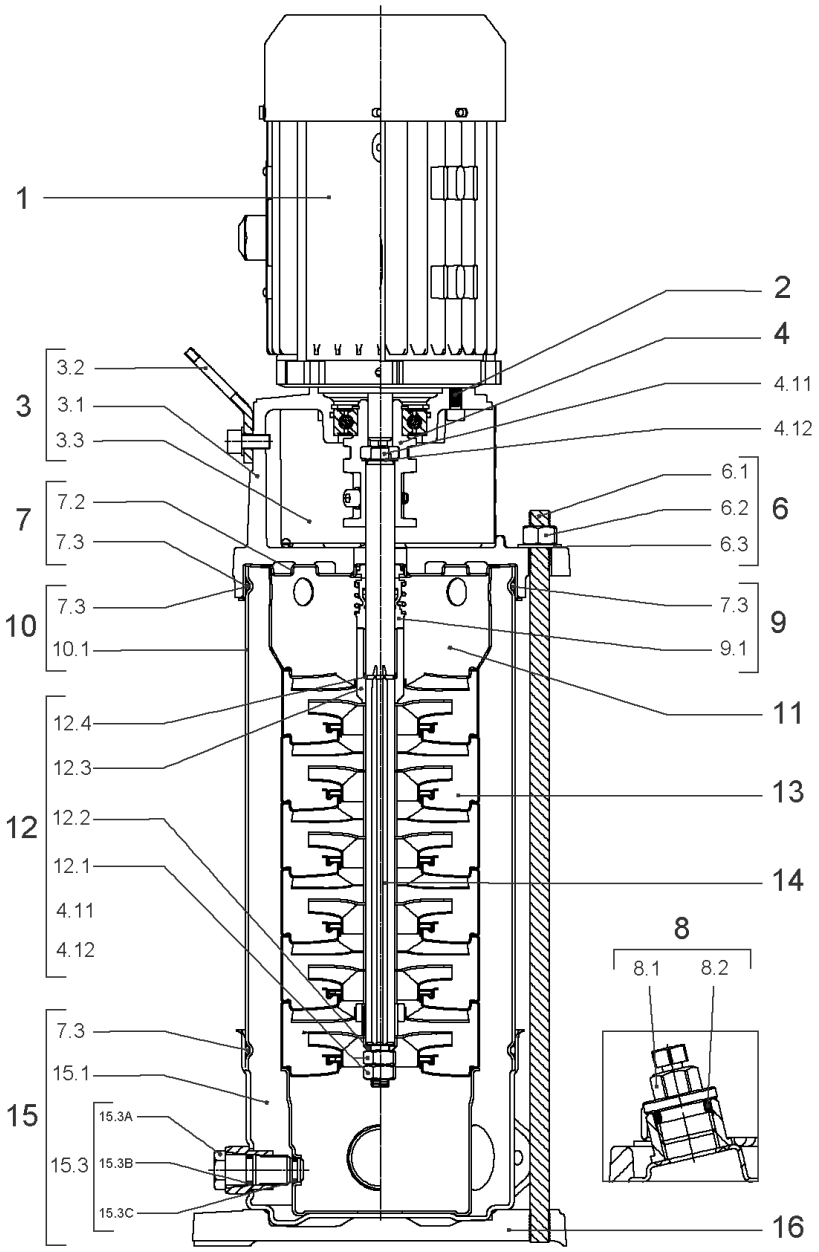
1
2
4
4.11
4.12
3
3.2
3.1
3.3
7
7.2
7.3
6
6.1
6.2
6.3
10
7.3
10.1
9
7.3
9.1
11
12
12.4
12.3
12.2
12.1
4.11
4.12
13
14
8
8.1
8.2
15
7.3
15.1
15.3
15.3A
15.3B
15.3C
16

## HELIX VE603-1/16/E/S (4201579)

| Item | Article no. | Description | Quantity |
|---|---|---|---|
| 1 | | DRIVE HELIX-VE603-IE4-WE KIT | 1 |
| Note: MOTOR BRAND WILO ELEC | | | |
| | | SPARE PARTS MOTOR:ON REQUEST | 1 |
| 2 | 4212716 | SCREW M6X20 KIT (4PIECES) | 1 |
| 3 | 4213752 | LANTERN FT100 HELIX KIT | 1 |
| 3.1 | | > LANT-MOT-VMI-ReDTC6"-FT100-MACHINED+CATA | 1 |
| 3.2 | 4184852 | > EYELET CPL.FT HELIX (2 PIECES) | 1 |
| 3.3 | 4213713 | > COUPLING PROTECTOR FT85/100 HELIX KIT | 1 |
| 4 | 4159708 | COUPLING D.16XD.19 FT100 HELIX KIT | 1 |
| 6 | 4177812 | STUD BOLT M12X300KIT | 1 |
| 6.1 | | > TIE BOLT M12-300x18x30-1.4057 | 1 |
| 6.2 | 2094647 | > NUT M12 M12 ISO4032 VP. | 1 |
| 6.3 | 2123557 | > WASHER CS-12.4-24-1.6-NFE25 (4 PIECES) | 1 |
| 7 | 4214481 | STATIONARY RING HOLDER HELIX D27 ReDTC | 1 |
| 7.2 | 4214479 | > STATIONARY RING HOLDER HELIX D27 VP. | 1 |
| 7.3 | 4176513 | > O-RING FOR PUMP JACKET VP. | 1 |
| 8 | 4212724 | FILING/PURGING PLUG HELIX ReDTC KIT | 1 |
| 8.1 | | > FILLING PLUG MVI6"-304 | 1 |
| 8.2 | 4177800 | > O-RING EPDM PLUG HELIX VP. | 1 |
| 9 | 4214483 | MECH.SEAL HELIX6-10-16 O/E ReDTC KIT | 1 |
| 9.1 | 4177801 | > MECH.SEAL HELIX6-10-16 O/E VP. | 1 |
| 7.3 | 4176513 | > O-RING FOR PUMP JACKET VP. | 1 |
| 10 | 4177813 | HOUSING PIPE D.152x172 1.4301 KIT | 1 |
| 7.3 | 4176513 | > O-RING FOR PUMP JACKET VP. | 1 |
| 10.1 | | > HOUSING-PIPE Ø152-M+1003-304 | 1 |
| 11 | 4174087 | CENTERING STAGE-RETURN HELIX6 1.4301VP. | 1 |
| 12 | 4214486 | SHAFT EQUIPMENT HELIX V6 ReDTC KIT | 1 |
| 12.1 | | > NUT-H-M10-A4.70 | 1 |
| 12.2 | | > SERRATED LOCK WASHER M+6M3-316L | 1 |
| 12.3 | | > 1/2-SNAP-RING-6/10M3-316L | 1 |
| 12.4 | | > STOP-RUSH-1/2-D16xd2-M+316 | 1 |
| 4.11 | | > SCREW CHC-M6X14-8.8-ISO4762-GEOMET500A | 1 |
| 4.12 | | > WASHER D.24 L6U ZINK | 1 |
| 13 | | HYDRAULIC HELIX V 603 1.4307 | 1 |

| Item | Article no. | Description | Quantity |
|---|---|---|---|
| 14 | 4214493 | SHAFT D.16X241 HELIX 1.4057 VP. | 1 |
| 15 | 4217897 | PUMP HOUSING HELIX DN32 PN16 1.4301 KIT | 1 |
| 7.3 | 4176513 | > O-RING FOR PUMP JACKET VP. | 1 |
| 15.1 | | > BLASTING PPE HOUSING V-PN16-DN32-5"-304 | 1 |
| 15.2 | 4217891 | > COUNTER FLANGE-G1"1/4-PN16-GJL KIT | 1 |
| 15.3 | 4171321 | > PRIMING/DRAIN PLUG EPDM HELIX KIT | 1 |
| 16 | 4177964 | BASEPLATE HELIX V2/4/6 PN16 VP. | 1 |

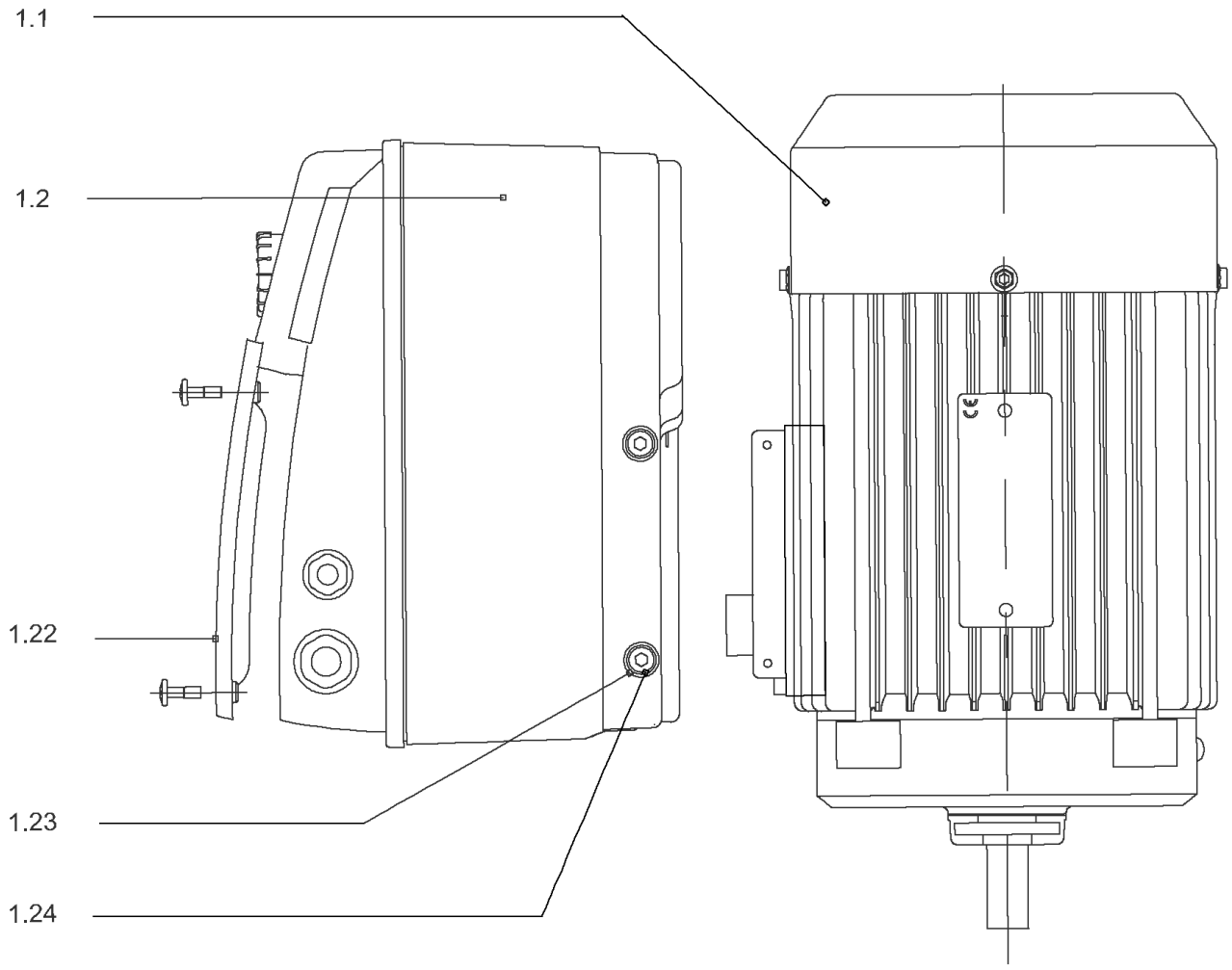
1.1
1.2
1.22
1.23
1.24

## DRIVE HELIX-VE603-IE4-WE KIT

| Item | Article no. | Description | Quantity |
|---|---|---|---|
| 1.1 | 4207916 | MOTOR 1.1/2/80 3~ 380V 60HZ IE4 WE VP. | 1 |
| | | SPARE PARTS MOTOR:ON REQUEST | 1 |
| 1.2 | 4209599 | MODULE HELIX-VE603-IE4-WE KIT | 1 |
| 1.22 | 2054372 | > MODULE COVER TL1,TL2+GASKET KIT | 1 |
| 1.23 | 4215716 | > SCREW M5X16 DIN912 8.8 A2A (4pieces) VP. | 1 |
| 1.24 | 2057978 | > RONDELLE A5,3 DIN6797 FST ZN (4 PIECES) | 1 |

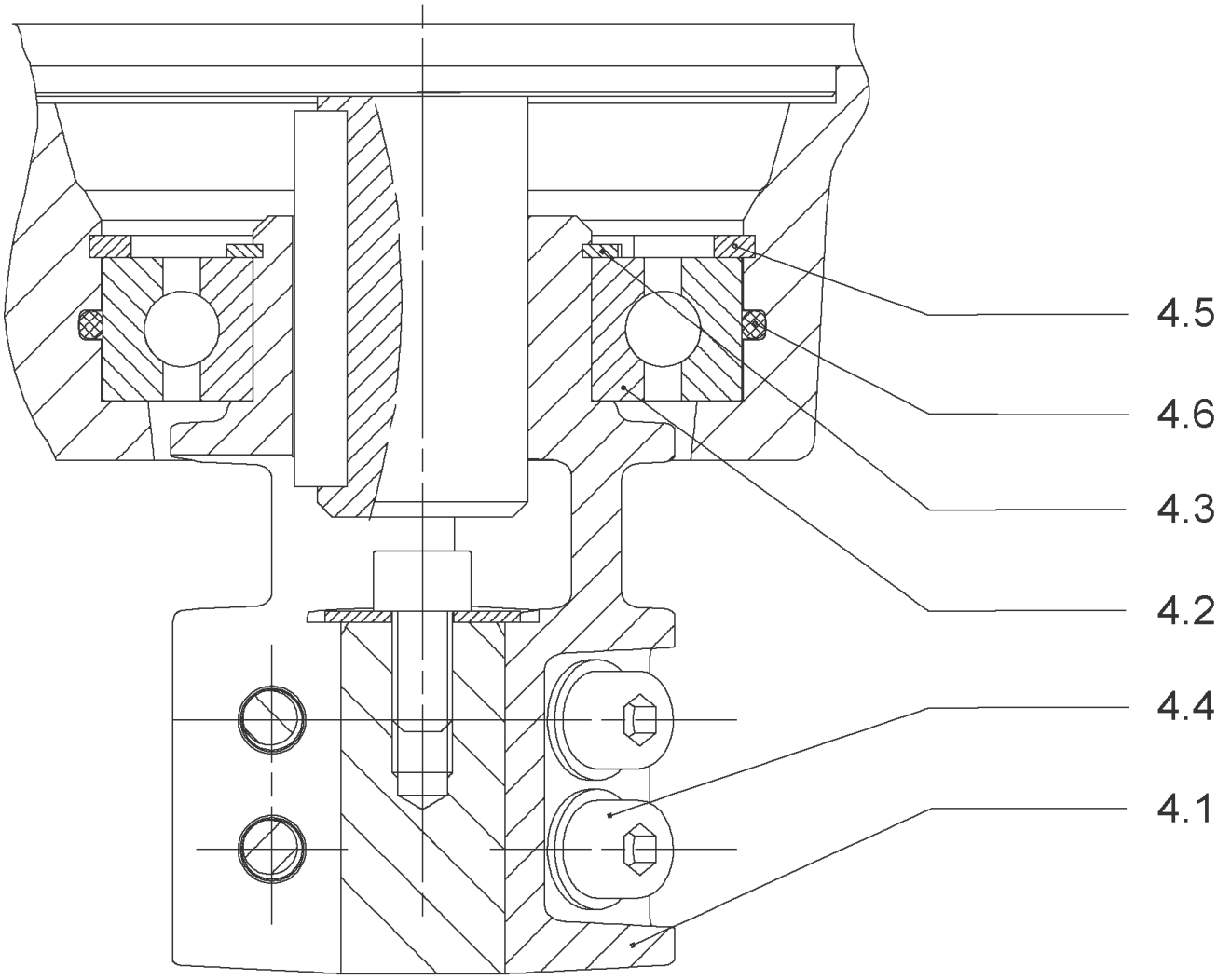
4.5
4.6
4.3
4.2
4.4
4.1

## COUPLING D.16XD.19 FT100 HELIX KIT (4159708)

| Item | Article no. | Description | Quantity |
|---|---|---|---|
| 4.1 | | COUPLING M+ Ø16XØ19 FT100 MACHINED | 1 |
| 4.2 | 2130977 | BALL BEARING 6206/ZZ-C3(HT)VP. | 1 |
| 4.3 | 4234249 | CIRCLIP-FOR-SHAFT-D30x1.5 VP. | 1 |
| 4.4 | 4212716 | SCREW M6X20 KIT (4PIECES) | 1 |
| 4.5 | 4234250 | CIRCLIP-D62x2 VP. | 1 |
| 4.6 | 4234245 | O-RING 63X3 VP. | 1 |
| | | CONTACT-WASHER-6ETR-6,1x12,2x1,8-STEEL | 1 |

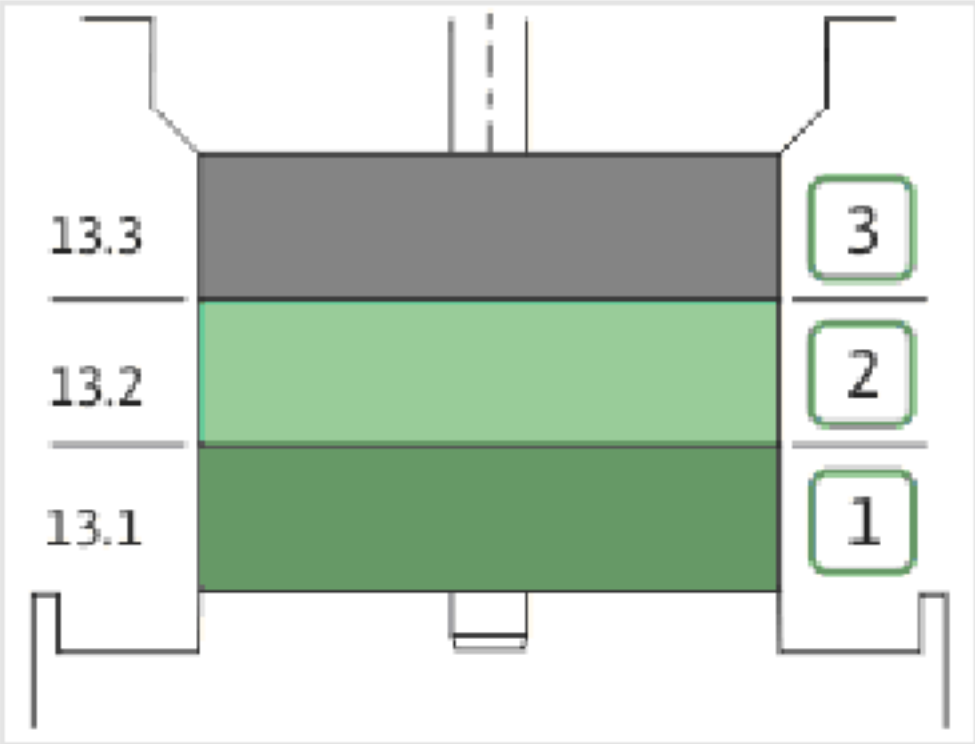
13.3
13.2
13.1
3
2
1

| Item | Article no. | Description | Quantity |
|---|---|---|---|
| 13.1 | 4174084 | STAGE HELIX 6 1.4301 KIT | 1 |
| | | > MACH.STG-CASING-WOGV-WNR-M+6-304 | 1 |
| | | > IMPELLER-M+6-304 | 1 |
| 13.2 | 4174089 | INTERMEDIATE STAGE HELIX 6 1.4301 KIT | 1 |
| | | > MACH.BEARING-STG-CASING-WNR-M+6-304 | 1 |
| | | > IMPELLER-M+6-304 | 1 |
| | | > SHAFT SLEEVE-SPACER-Ø19,35x18,465-304 | 1 |
| | | > SHAFT-SLEEVE-D16xD20x18-CW | 1 |
| 13.3 | 4174090 | INTERMEDIATE STAGE HELIX 6 1.4301 KIT | 1 |
| | | > MACH.STD-STG-CASING-WGV+NR-M+6-304 | 1 |
| | | > IMPELLER-M+6-304 | 1 |
| | | > IMPELLER SPACER Ø16,05X19,45-L36,465-304 | 1 |

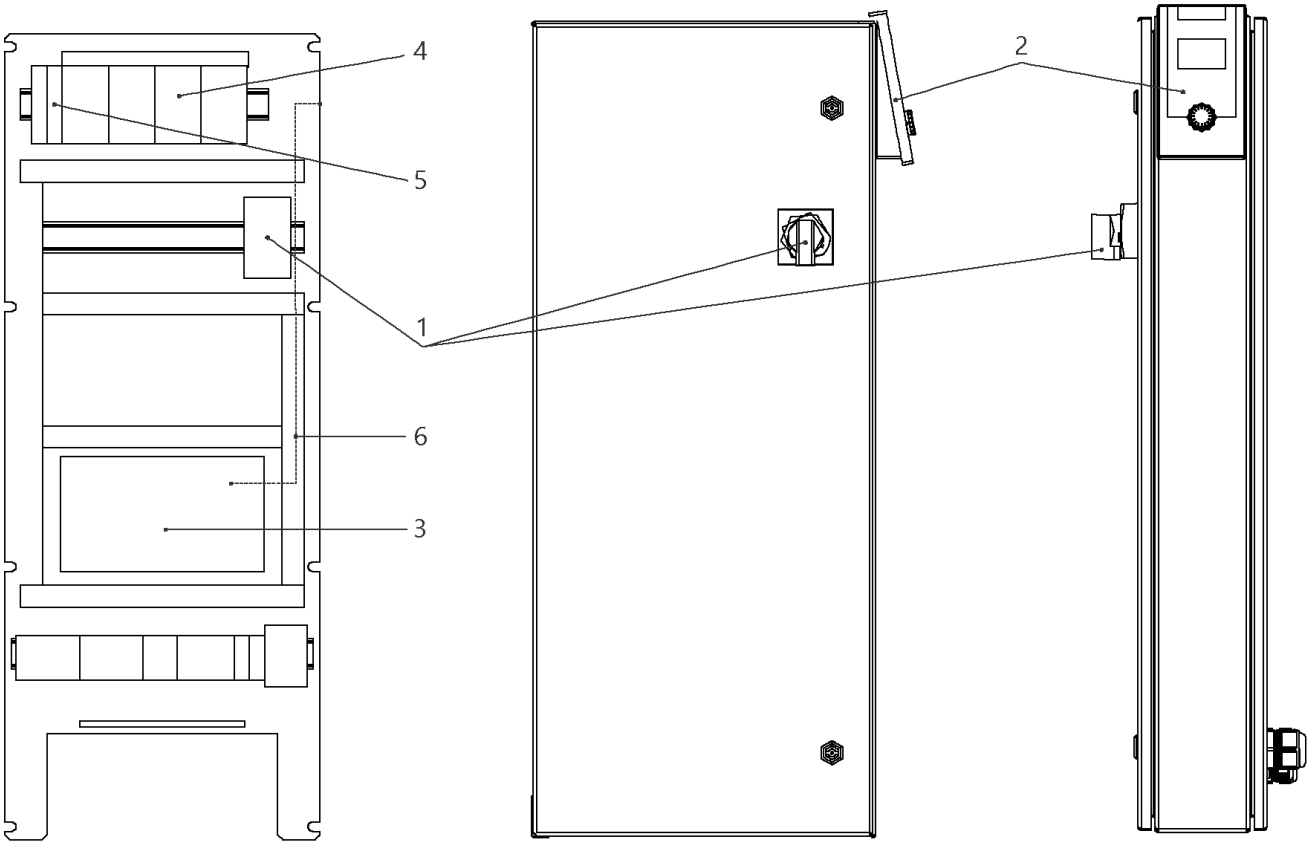
4
5
1
6
3
2

## W-CTRL-SCE-B-2x1,1KW-T4-FM-ND2

| Item | Article no. | Description | Quantity |
|---|---|---|---|
| 1 | 2104470 | MAIN SWITCH OT40F3 L250 KIT | 1 |
| 2 | 4184784 | CONTROL PANEL HMI SC KIT | 1 |
| 2 | 4185259 | ASSEMBLY DISPLAY SC PKG VP. | 1 |
| 3 | 4185257 | ASSEMBLY CPU SCe Booster VP. | 1 |
| 4 | 2051217 | AUTOM.CIRCUIT BREAKER S203 B16 TO7,5kW | 1 |
| 5 | 2046288 | CIRCUIT BREAKER S201 B16 | 1 |
| 6 | 4194956 | PATCH CABLE RJ45 CAT6 1,0M BLUE SC-PANEL | 1 |

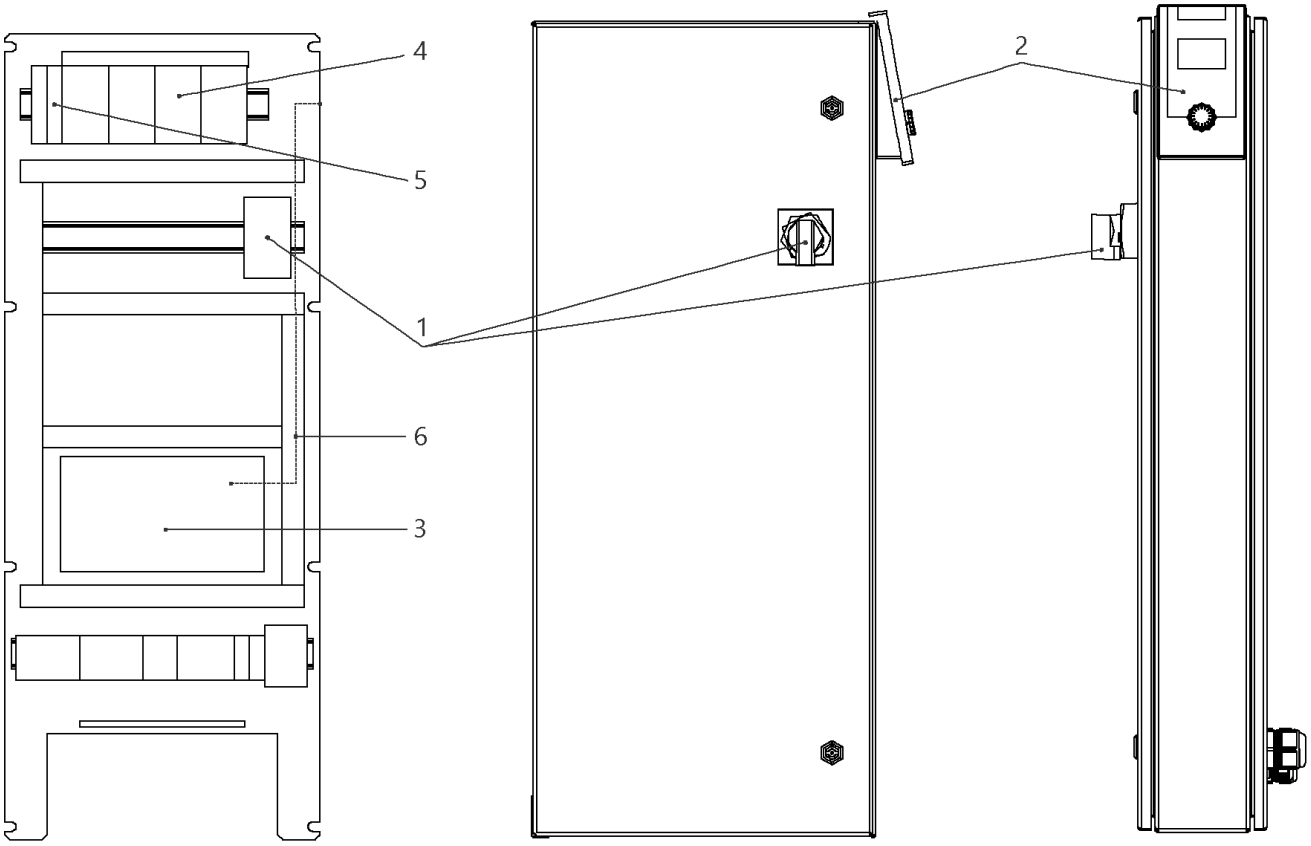
4
5
1
6
3
2

## W-CTRL-SCE-B-2x0,55-1,5KW-T4-FM-ND1

| Item | Article no. | Description | Quantity |
|---|---|---|---|
| 1 | 2104470 | MAIN SWITCH OT40F3 L250 KIT | 1 |
| 2 | 4184784 | CONTROL PANEL HMI SC KIT | 1 |
| 2 | 4185259 | ASSEMBLY DISPLAY SC PKG VP. | 1 |
| 3 | 4185257 | ASSEMBLY CPU SCe Booster VP. | 1 |
| 4 | 2051217 | AUTOM.CIRCUIT BREAKER S203 B16 TO7,5kW | 1 |
| 5 | 2046288 | CIRCUIT BREAKER S201 B16 | 1 |
| 6 | 4197081 | CABLE RJ45 CAT6 0,5M RED SC-PANEL VP. | 1 |

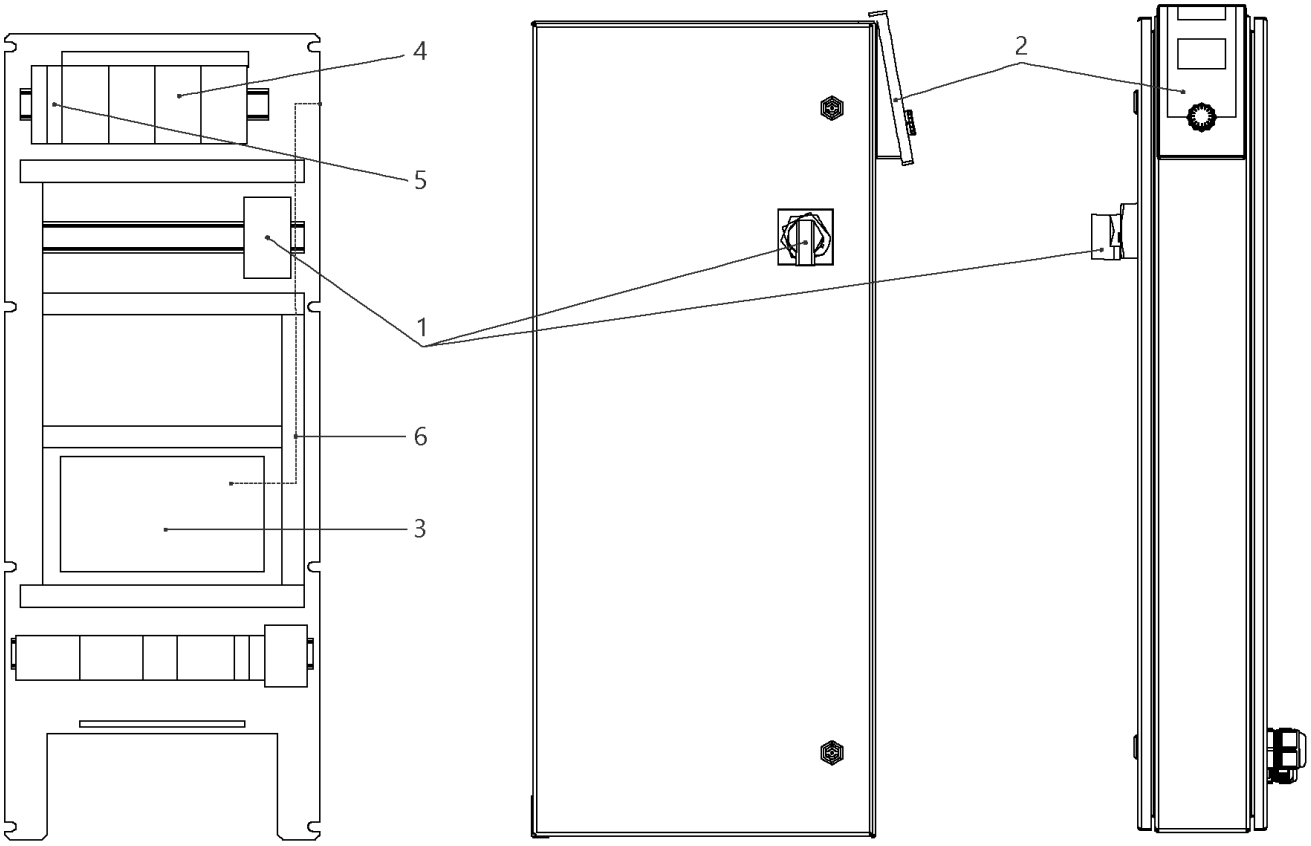
4
5
1
6
3
2

## W-CTRL-SCE-B-2x10A-T34-FM-ND1-AVC-PKG (2541913)

| Item | Article no. | Description | Quantity |
|---|---|---|---|
| 1 | 2104470 | MAIN SWITCH OT40F3 L250 KIT | 1 |
| 2 | 4184784 | CONTROL PANEL HMI SC KIT | 1 |
| 2 | 4185259 | ASSEMBLY DISPLAY SC PKG VP. | 1 |
| Note: DISPLAY ALONE / PLATINE SEULE | | | |
| 3 | 4185257 | ASSEMBLY CPU SCe Booster VP. | 1 |
| 4 | 2119861 | AUTOMATIC CIRCUIT BREAKER S203 B13 3POL. | 1 |
| 5 | 2046288 | CIRCUIT BREAKER S201 B16 | 1 |
| 6 | 4197081 | CABLE RJ45 CAT6 0,5M RED SC-PANEL VP. | 1 |

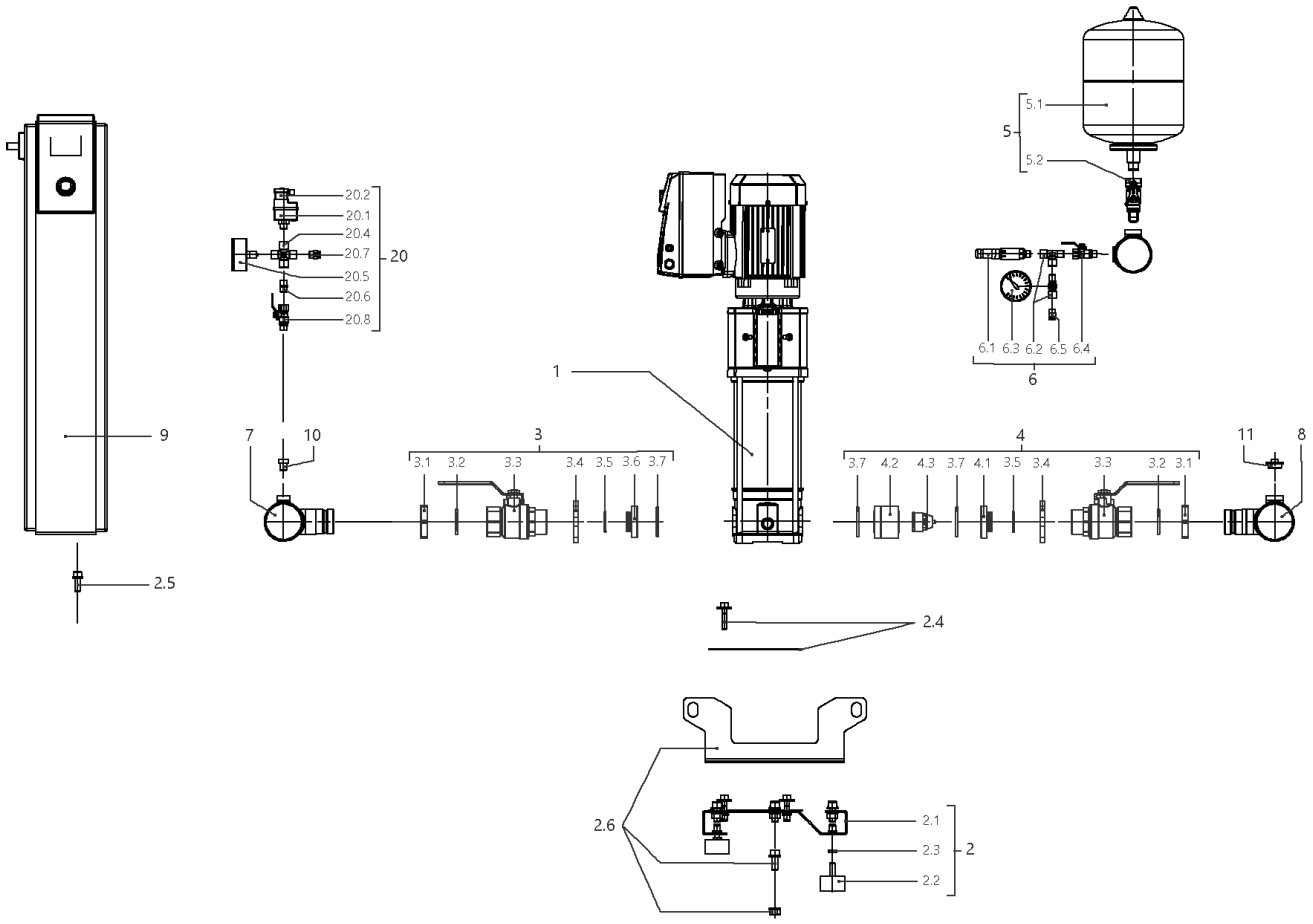
5.1
5
5.2
20.2
20.1
20.4
20.7
20
20.5
20.6
20.8
6.1 6.3 6.2 6.5 6.4
6
1
9
7
10
3
3.1 3.2 3.3 3.4 3.5 3.6 3.7
4
3.7 4.2 4.3 3.7 4.1 3.5 3.4 3.3 3.2 3.1
11
8
2.5
2.4
2.6
2.1
2.3
2
2.2

## SiBoost Smart 2HELIX VE604 (2537333)

| Item | Article no. | Description | Quantity |
|---|---|---|---|
| 1 | | HELIX VE604-1/16/E/S | 1 |
| Note: TO / BIS / JUSQU'AU 31/03/2016 | | | |
| 1 | 4201581 | HELIX VE604-1/16/E/S | 1 |
| Note: FROM / AB / À PARTIR DU 01/04/2016 | | | |
| 2 | 4199874 | BASE PLATE DE2 850x300 M10 KIT | 1 |
| 2.1 | | > BASEPLATE_2x4/6/10V_E300_850x300_BOX_150 | 1 |
| 2.2 | 2028654 | > VIBRATION DAMPER D.50X30 M10X28 | 1 |
| 2.3 | 2028281 | > NUT M10 DIN936 (ISO4035) 17H VZ | 1 |
| 2.4 | 4199875 | > HOLDER PUMP Siboost Helix V2/4 KIT | 1 |
| 2.5 | 4197084 | > HOLDER SWITCHBOX WILO Smart Control KIT | 1 |
| 2.6 | 4197085 | > LIFTING Siboost HELIX SC KIT | 1 |
| 3 | 4199876 | SUCTION SIDE Siboost Helix V2/4/6 KIT | 1 |
| 3.1 | 2032610 | > NUT G11/4 MS VP. | 1 |
| 3.2 | 2032611 | > O-RING ID.36,09X3,53N DIN3771 E7502 | 1 |
| 3.3 | 2507646 | > BALL VALVE G11/4"M-F-W.HANDLE 1/4-TURN | 1 |
| 3.4 | 2032613 | > SCREWED FLANGE G1 1/4" LK-75 ST37VZ | 1 |
| 3.5 | 2032614 | > O-RING ID.29,82X2,62N DIN3771 E7502 | 1 |
| 3.6 | 2032615 | > SPACER F.I/A KUH.DN32 CUZN | 1 |
| 3.7 | 2032616 | > O-RING ID.44X3,53N DIN3771 E7502 | 1 |
| 4 | 4199877 | DELIVERY SIDE Siboost Helix V2/4/6 KIT | 1 |
| 3.1 | 2032610 | > NUT G11/4 MS VP. | 1 |
| 3.2 | 2032611 | > O-RING ID.36,09X3,53N DIN3771 E7502 | 1 |
| 3.3 | 2507646 | > BALL VALVE G11/4"M-F-W.HANDLE 1/4-TURN | 1 |
| 3.4 | 2032613 | > SCREWED FLANGE G1 1/4" LK-75 ST37VZ | 1 |
| 3.5 | 2032614 | > O-RING ID.29,82X2,62N DIN3771 E7502 | 1 |
| 4.1 | 2058116 | > SPACER F.I/A KUH.DN32 CUZN | 1 |
| 3.7 | 2032616 | > O-RING ID.44X3,53N DIN3771 E7502 | 1 |
| 4.2 | 2058115 | > HOUSING RFV(RV-IN) DN32 SGS/DRS | 1 |
| 4.3 | 2027870 | > NON-RETURN-DEVICE INSERT DN32(MTR) | 1 |
| 5 | 2032642 | DIAPHREM TANK 8L/PN16 DIN4807/T5 KIT | 1 |
| 5.1 | 2045914 | > DIAPHREM TANK 8L TYP-DD 16BAR | 1 |
| 5.2 | 2027853 | > FLOW FITTING G3/4 FOR DIAPHRAGM VES. | 1 |
| 6 | 4197076 | PRESSURE SENSOR/ GAUGE 0-16BAR KIT | 1 |
| 6.1 | 2085909 | > PRESS.SENSOR 1/4" 0-16BAR 4-20MA VP. | 1 |

| Item | Article no. | Description | Quantity |
|---|---|---|---|
| 6.2 | 4197077 | > T-PIECE 1/4" VP. | 1 |
| 6.3 | 2028692 | > PRESSURE GAUGE NG63-PN16-G1/4 | 1 |
| 6.4 | 2028291 | > BALL TAP R1/4" PN42 GIACOMINI R254DL | 1 |
| 6.5 | 2028691 | > BLOWGUN 1/4" MS 30BAR VP. | 1 |
| 7 | 4200092 | PIPE DE2 2''-2x1"1/4+1x1/4x600 VP. | 1 |
| 8 | 4200093 | PIPE DE2 2''-2x11/4"+1x1/4+1x3/4x600 VP. | 1 |
| 9 | | W-CTRL-SCE-B-2x0,55-1,5KW-T4-FM-ND1 | 1 |
| Note: TO / BIS / JUSQU'AU 18/05/2014 | | | |
| 9 | 2541913 | W-CTRL-SCE-B-2x10A-T34-FM-ND1-AVC-PKG | 1 |
| Note: FROM / AB / À PARTIR DU 19/05/2014 | | | |
| 10 | 4197079 | PLUG G1/4"x10 AISI304 KIT | 1 |
| 11 | 2032654 | PLUG R3/4" MS VIEGA 1751 | 1 |
| 20 | 2521150 | ASSEMBLY WMS. DE-EB. +VP | 1 |
| 20.1 | 2028652 | > PRESSURE SWITCH PS3-ASR 1/(1,3) VP. | 1 |
| 20.2 | 2130983 | > PLUG PS3-415 WITH KABEL 1,5M 2NO VP. | 1 |
| 20.4 | 2028290 | > CROSSPIECE R1/4" MS-NICKEL | 1 |
| 20.5 | 2028687 | > PRESSURE GAUGE NG63 R1/4" HI.0-6BAR | 1 |
| 20.6 | 2054268 | > DUAL NIPPLE G1/4" x G1/4" MS VP. | 1 |
| 20.7 | 2028691 | > BLOWGUN 1/4" MS 30BAR VP. | 1 |
| 20.8 | 2028291 | > BALL TAP R1/4" PN42 GIACOMINI R254DL | 1 |

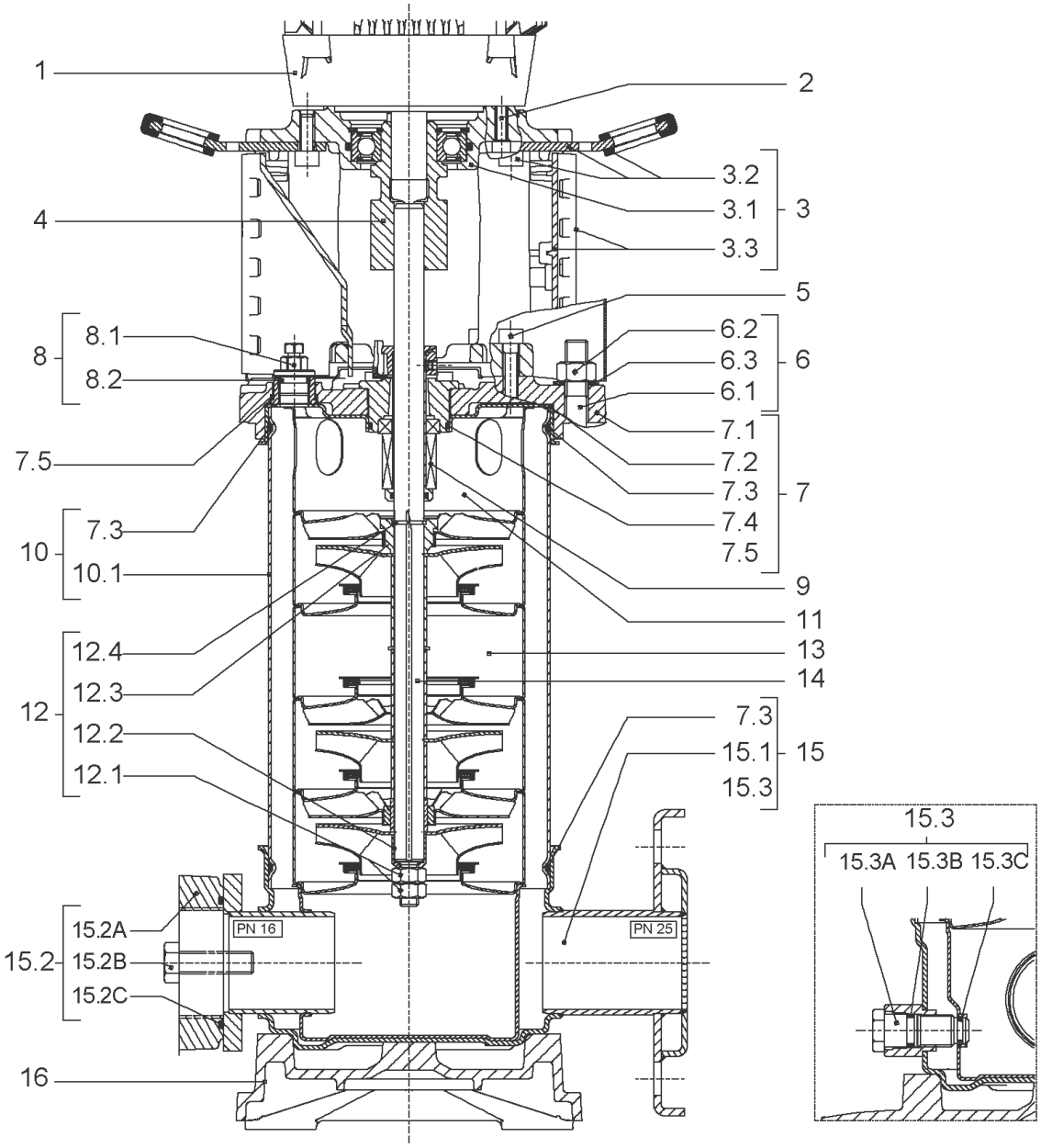
1
2
3.2
3.1
3
3.3
4
5
8.1
8
8.2
6.2
6.3
6
6.1
7.1
7.5
7.2
7.3
7
7.4
7.3
10
7.5
10.1
9
11
12.4
13
12.3
14
12
12.2
7.3
15.1
15
12.1
15.3
15.3
15.3A 15.3B 15.3C
15.2A
PN 16
PN 25
15.2
15.2B
15.2C
16

| Item | Article no. | Description | Quantity |
|---|---|---|---|
| 1 | | DRIVE HELIX-VE604IE2-WE KIT | 1 |
| Note: MOTOR BRAND WILO ELEC | | | |
| 1 | | DRIVE HELIX-VE604-IE4-WE KIT | 1 |
| Note: MOTOR BRAND WILO ELEC | | | |
| 2 | 4159703 | SCREW M8X40 (4 PIECES) | 1 |
| 3 | 4172795 | LANTERNE FT115 HELIX KIT | 1 |
| 3.1 | | > M+5_6_LANTERN_ONE-PIECE_FT115_CATA | 1 |
| 3.2 | 2127604 | > EYELET CPL.FT HELIX(2 PIECES) | 1 |
| 3.3 | 4159692 | > COUPLING PROTECTOR FT HELIX KIT | 1 |
| 4 | 4159709 | COUPLING D.16xD.24 FT115 HELIX KIT | 1 |
| 5 | 4159707 | SCREW M8X30 (4 PIECES) | 1 |
| 6 | 4177817 | STUD BOLT M12X341 KIT | 1 |
| 6.1 | | > TIE BOLT M12-341x18x30-1.4057 | 1 |
| 6.2 | 2094647 | > NUT M12 M12 ISO4032 VP. | 1 |
| 6.3 | 2123557 | > WASHER CS-12.4-24-1.6-NFE25 (4 PIECES) | 1 |
| 7 | 4210143 | STATIONARY RING HOLDER HELIX 6" EPDM | 1 |
| 7.2 | 2127607 | > STATIONARY RING HOLDER 6" HELIX 1.4301 V | 1 |
| 7.3 | 4176513 | > O-RING FOR PUMP JACKET VP. | 1 |
| 7.4 | 2127603 | > O-RING ID.37,6x2,4 EPDM VP. | 1 |
| 7.5 | 2127602 | > O-RING ID.21,35x2 EPDM VP. | 1 |
| 8 | 4159686 | FILING/PURGING PLUG HELIX EPDM KIT | 1 |
| 9 | 4171327 | SEAL-KIT-HELIX6-10-16 O/E KIT | 1 |
| 10 | 4177818 | HOUSING PIPES Ø152-M+1004-304 KIT | 1 |
| 7.3 | 4176513 | > O-RING FOR PUMP JACKET VP. | 1 |
| 10.1 | | > HOUSING-PIPE Ø152-M+1004/1603-304 | 1 |
| 11 | 4174087 | CENTERING STAGE-RETURN HELIX6 1.4301VP. | 1 |
| 12 | 4174086 | SHAFTS EQUIPMENT HELIX V6 MONOBLOC KIT | 1 |
| 12.1 | | > NUT-H-M10-A4.70 | 1 |
| 12.2 | | > SERRATED LOCK WASHER M+6M3-316L | 1 |
| 12.3 | | > IMPELLER STOP RING L33,2-304 | 1 |
| 12.4 | | > STOP-RUSH-1/2-D16xd2-M+316 | 1 |
| 13 | | HYDRAULIC HELIX V 604 1.4307 | 1 |
| 14 | 4177820 | SHAFTS Ø16X330 1. 4301 VP. | 1 |
| 15 | 4217897 | PUMP HOUSING HELIX DN32 PN16 1.4301 KIT | 1 |

| Item | Article no. | Description | Quantity |
|---|---|---|---|
| 7.3 | 4176513 | > O-RING FOR PUMP JACKET VP. | 1 |
| 15.1 | | > BLASTING PPE HOUSING V-PN16-DN32-5"-304 | 1 |
| 15.2 | 4217891 | > COUNTER FLANGE-G1"1/4-PN16-GJL KIT | 1 |
| 15.3 | 4171321 | > PRIMING/DRAIN PLUG EPDM HELIX KIT | 1 |
| 16 | 4177964 | BASEPLATE HELIX V2/4/6 PN16 VP. | 1 |

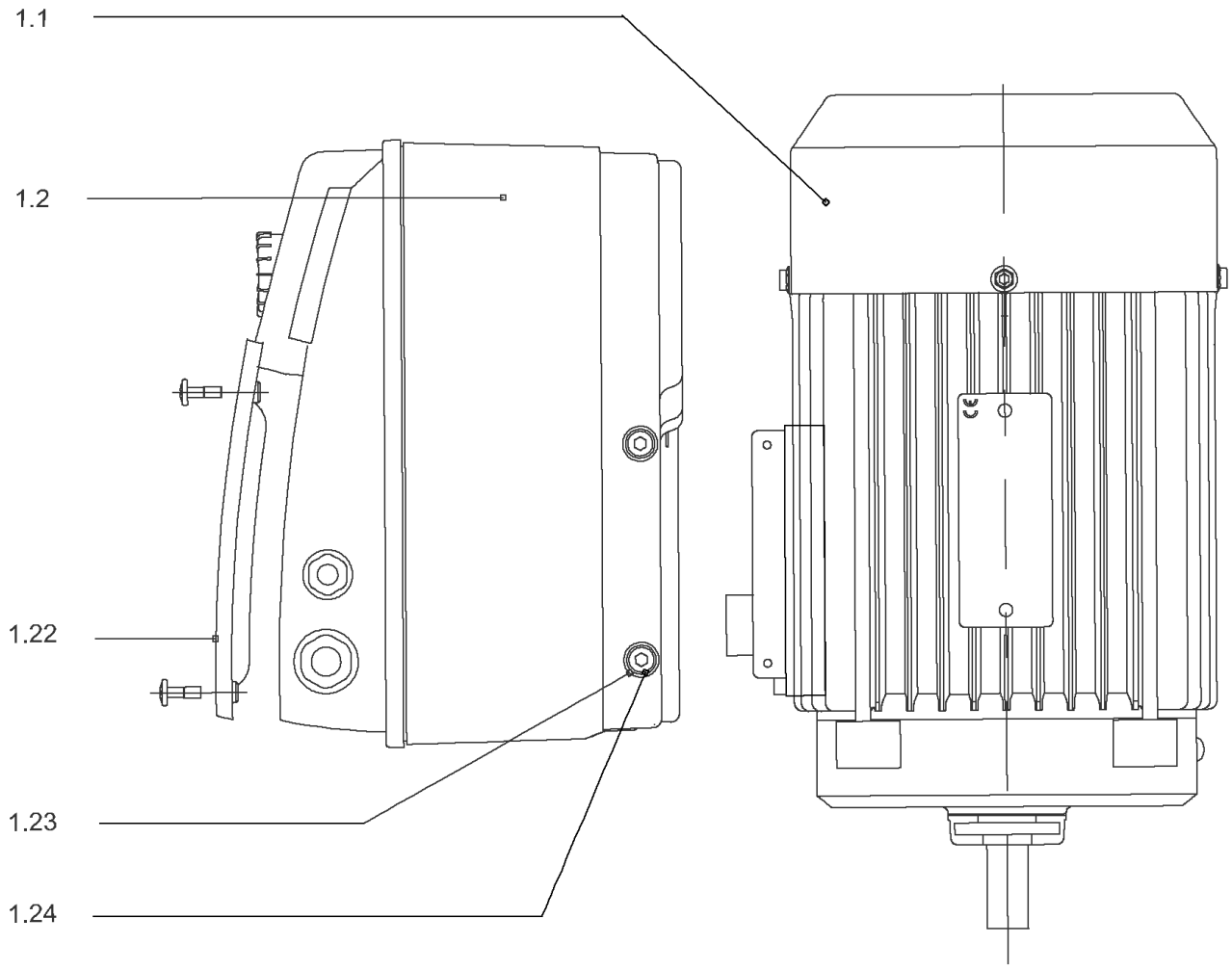
1.1
1.2
1.22
1.23
1.24

## DRIVE HELIX-VE604IE2-WE KIT

| Item | Article no. | Description | Quantity |
|---|---|---|---|
| 1.1 | | MOTOR 1,5/2/90 3~ 380V 60HZ IE2 WE VP. | 1 |
| Note: no longer available/nicht mehrlieferbar/n'est plus disponible | | | |
| | | SPARE PARTS MOTOR:ON REQUEST | 1 |
| 1.2 | 4190201 | MODULE HELIX-VE604-IE2-WE KIT | 1 |
| 1.22 | 2054227 | > MODULE COVER/GASKET TL3/4 KIT | 1 |
| 1.23 | 4215716 | > SCREW M5X16 DIN912 8.8 A2A (4pieces) VP. | 1 |
| 1.24 | 2057978 | > RONDELLE A5,3 DIN6797 FST ZN (4 PIECES) | 1 |

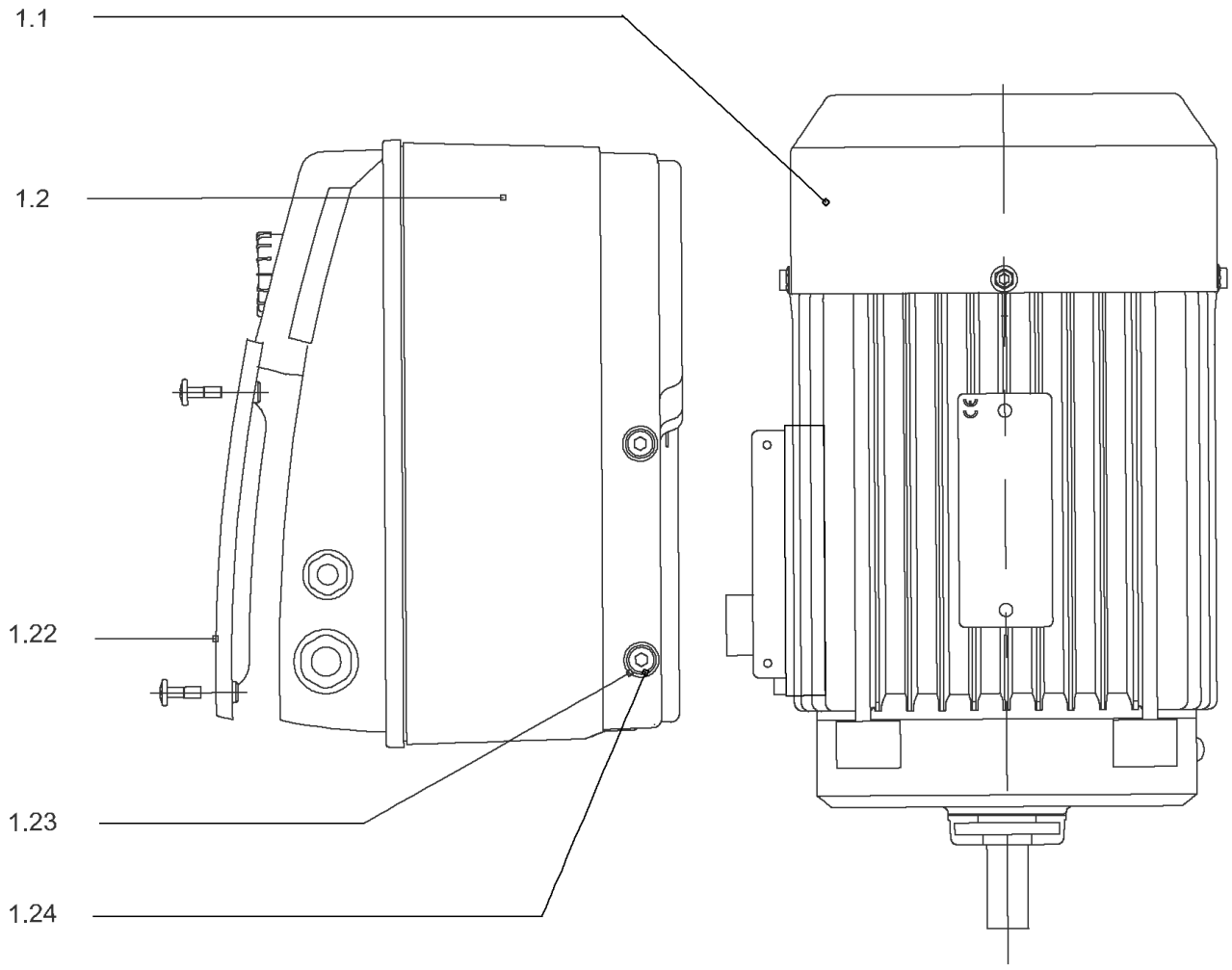
1.1
1.2
1.22
1.23
1.24

## DRIVE HELIX-VE604-IE4-WE KIT

| Item | Article no. | Description | Quantity |
|---|---|---|---|
| 1.1 | 4207918 | MOTOR 1.5/2/90 3~ 380V 60HZ IE4 WE VP. | 1 |
| | | SPARE PARTS MOTOR:ON REQUEST | 1 |
| 1.2 | 4209316 | MODULE HELIX-VE604-IE4-WE KIT | 1 |
| 1.22 | 2054227 | > MODULE COVER/GASKET TL3/4 KIT | 1 |
| 1.23 | 4215716 | > SCREW M5X16 DIN912 8.8 A2A (4pieces) VP. | 1 |
| 1.24 | 2057978 | > RONDELLE A5,3 DIN6797 FST ZN (4 PIECES) | 1 |

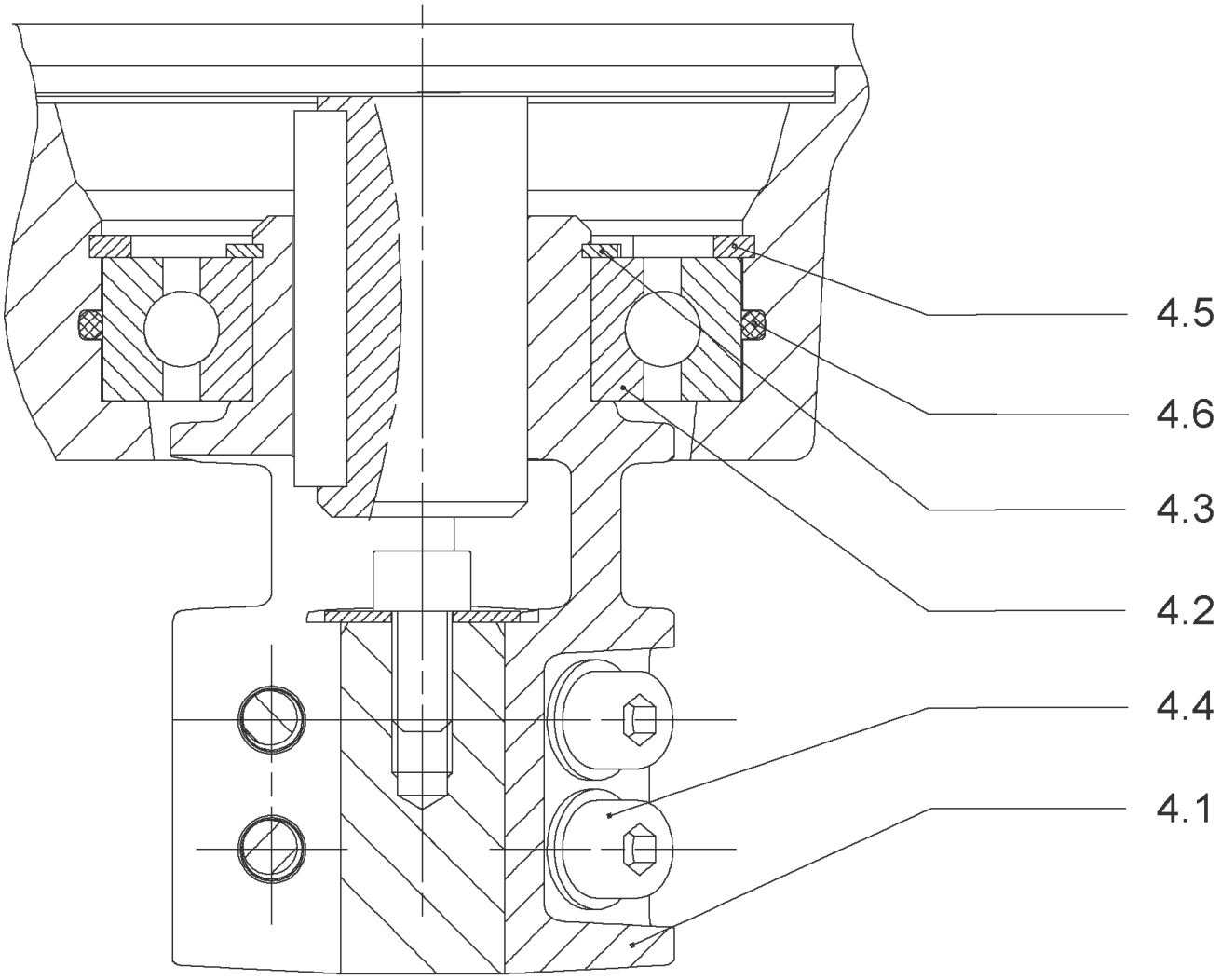
4.5
4.6
4.3
4.2
4.4
4.1

## COUPLING D.16xD.24 FT115 HELIX KIT (4159709)

| Item | Article no. | Description | Quantity |
|---|---|---|---|
| 4.1 | | COUPLING M+ Ø16XØ24 FT115 MACHINED | 1 |
| 4.2 | 2131023 | BALL BEARING 6207/ZZ-C3(HT)VP. | 1 |
| 4.3 | 4234254 | CIRCLIP-FOR-SHAFT-D35x1.5 VP. | 1 |
| 4.4 | 4157726 | SCREW KIT M8X30 (4 PIECES) | 1 |
| 4.5 | 4234251 | CIRCLIP-D72x2.5 VP. | 1 |
| 4.6 | 4234246 | O-RING 72X3 VP. | 1 |
| | | NOMEL CONTACT WASHER 8x16x1,4 STEEL ZC | 1 |

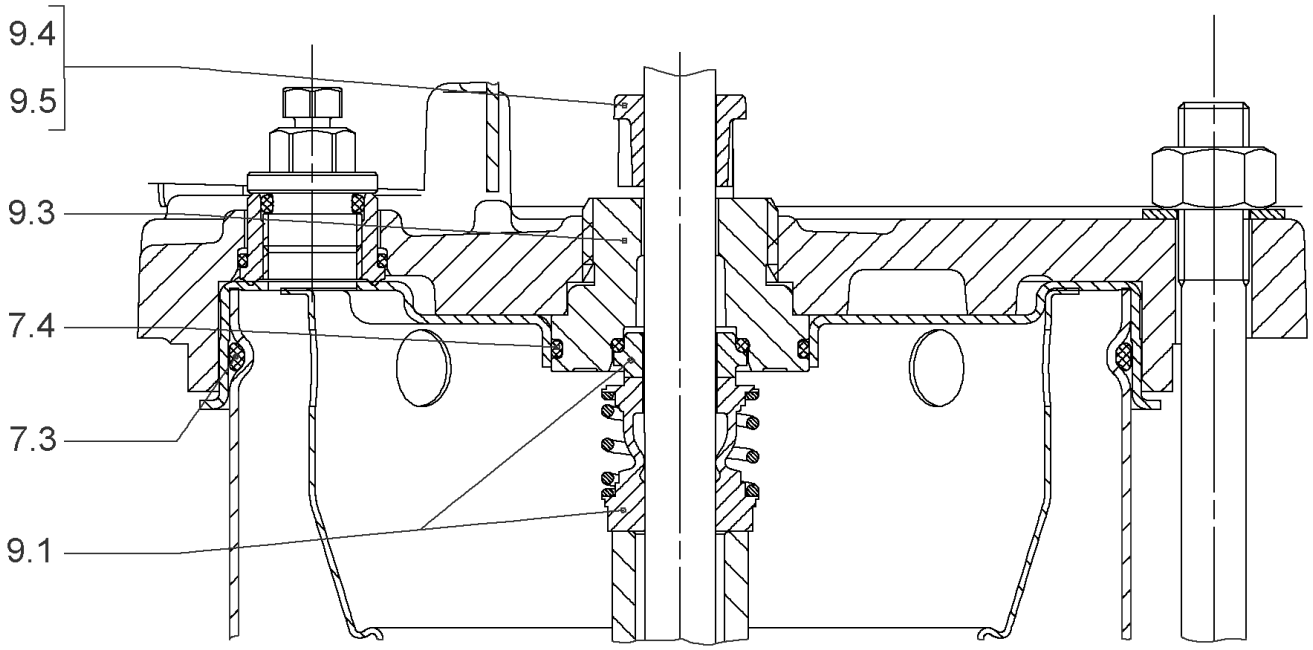
9.4
9.5
9.3
7.4
7.3
9.1

## SEAL-KIT-HELIX6-10-16 O/E KIT (4171327)

| Item | Article no. | Description | Quantity |
|---|---|---|---|
| 7.3 | 4176513 | O-RING FOR PUMP JACKET VP. | 1 |
| 7.4 | 2127603 | O-RING ID.37,6x2,4 EPDM VP. | 1 |
| 9.1 | 4177801 | MECH.SEAL HELIX6-10-16 O/E VP. | 1 |
| 9.3 | 4177798 | MACHINED RING HOLDER M+6" Ø16 304 VP. | 1 |
| 9.5 | 4177799 | MACHINED DRIVE RING Ø16 VP. | 1 |
| 9.4 | 4176520 | SCREW CH M5x5 A4-70 ( 3PIECES ) | 1 |

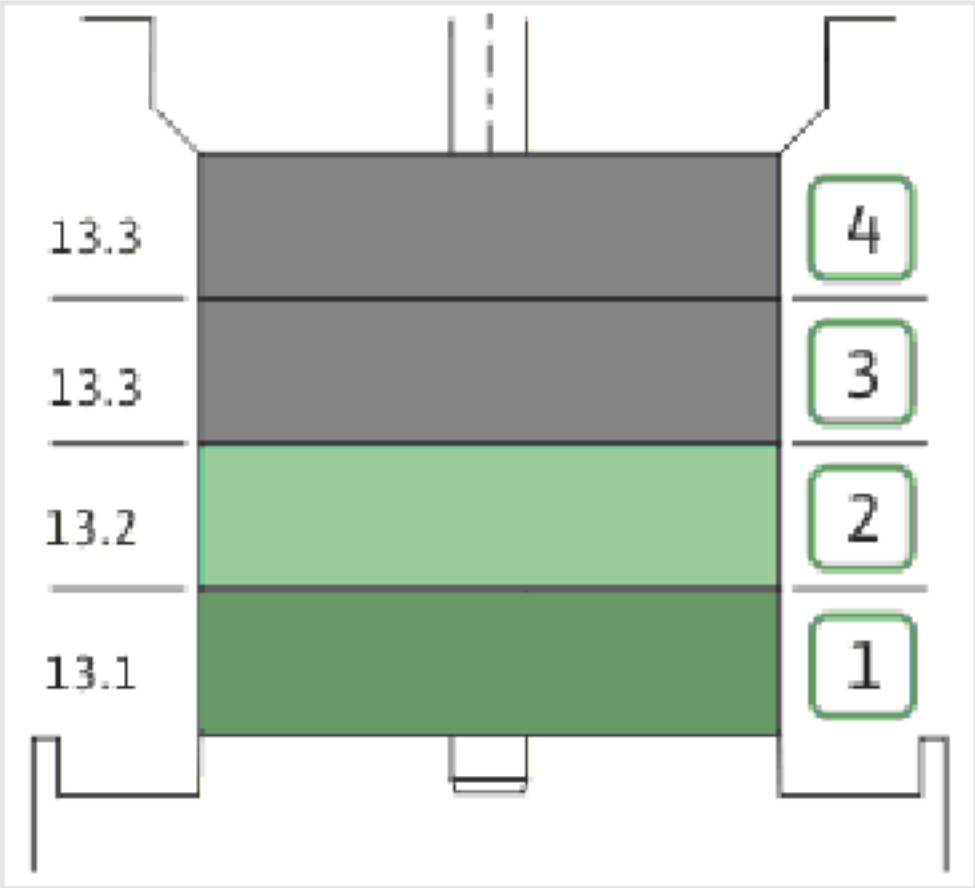
13.3
13.3
13.2
13.1
4
3
2
1

| Item | Article no. | Description | Quantity |
|---|---|---|---|
| 13.1 | 4174084 | STAGE HELIX 6 1.4301 KIT | 1 |
| | | > MACH.STG-CASING-WOGV-WNR-M+6-304 | 1 |
| | | > IMPELLER-M+6-304 | 1 |
| 13.2 | 4174089 | INTERMEDIATE STAGE HELIX 6 1.4301 KIT | 1 |
| | | > MACH.BEARING-STG-CASING-WNR-M+6-304 | 1 |
| | | > IMPELLER-M+6-304 | 1 |
| | | > SHAFT SLEEVE-SPACER-Ø19,35x18,465-304 | 1 |
| | | > SHAFT-SLEEVE-D16xD20x18-CW | 1 |
| 13.3 | 4174090 | INTERMEDIATE STAGE HELIX 6 1.4301 KIT | 1 |
| | | > MACH.STD-STG-CASING-WGV+NR-M+6-304 | 1 |
| | | > IMPELLER-M+6-304 | 1 |
| | | > IMPELLER SPACER Ø16,05X19,45-L36,465-304 | 1 |

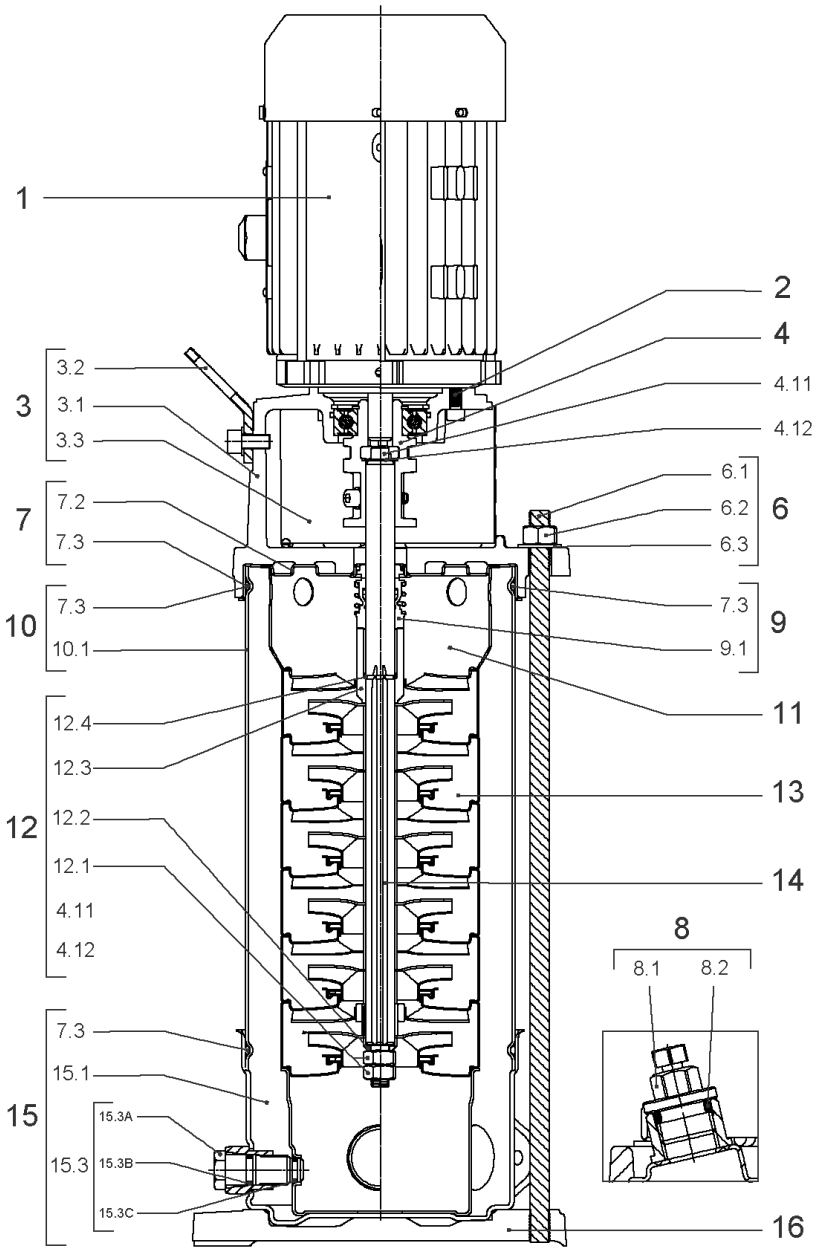
1
2
4
4.11
4.12
3
3.2
3.1
3.3
7
7.2
7.3
6
6.1
6.2
6.3
10
7.3
10.1
9
7.3
9.1
11
12
12.4
12.3
12.2
12.1
4.11
4.12
13
14
8
8.1
8.2
15
7.3
15.1
15.3
15.3A
15.3B
15.3C
16

## HELIX VE604-1/16/E/S (4201581)

| Item | Article no. | Description | Quantity |
|---|---|---|---|
| 1 | | DRIVE HELIX-VE604-IE4-WE KIT | 1 |
| Note: MOTOR BRAND WILO ELEC | | | |
| | | SPARE PARTS MOTOR:ON REQUEST | 1 |
| 2 | 4159707 | SCREW M8X30 (4 PIECES) | 1 |
| 3 | 4213784 | LANTERN FT115 HELIX KIT | 1 |
| 3.1 | | > LANT-MOT-VMI-ReDTC6"-FT115-MACHINED+CATA | 1 |
| 3.2 | 4184852 | > EYELET CPL.FT HELIX (2 PIECES) | 1 |
| 3.3 | 4213782 | > COUPLING PROTECTOR FT115/130 HELIX KIT | 1 |
| 4 | 4159709 | COUPLING D.16xD.24 FT115 HELIX KIT | 1 |
| 6 | 4177817 | STUD BOLT M12X341 KIT | 1 |
| 6.1 | | > TIE BOLT M12-341x18x30-1.4057 | 1 |
| 6.2 | 2094647 | > NUT M12 M12 ISO4032 VP. | 1 |
| 6.3 | 2123557 | > WASHER CS-12.4-24-1.6-NFE25 (4 PIECES) | 1 |
| 7 | 4214481 | STATIONARY RING HOLDER HELIX D27 ReDTC | 1 |
| 7.2 | 4214479 | > STATIONARY RING HOLDER HELIX D27 VP. | 1 |
| 7.3 | 4176513 | > O-RING FOR PUMP JACKET VP. | 1 |
| 8 | 4212724 | FILING/PURGING PLUG HELIX ReDTC KIT | 1 |
| 8.1 | | > FILLING PLUG MVI6"-304 | 1 |
| 8.2 | 4177800 | > O-RING EPDM PLUG HELIX VP. | 1 |
| 9 | 4214483 | MECH.SEAL HELIX6-10-16 O/E ReDTC KIT | 1 |
| 9.1 | 4177801 | > MECH.SEAL HELIX6-10-16 O/E VP. | 1 |
| 7.3 | 4176513 | > O-RING FOR PUMP JACKET VP. | 1 |
| 10 | 4177818 | HOUSING PIPES Ø152-M+1004-304 KIT | 1 |
| 7.3 | 4176513 | > O-RING FOR PUMP JACKET VP. | 1 |
| 10.1 | | > HOUSING-PIPE Ø152-M+1004/1603-304 | 1 |
| 11 | 4174087 | CENTERING STAGE-RETURN HELIX6 1.4301VP. | 1 |
| 12 | 4214486 | SHAFT EQUIPMENT HELIX V6 ReDTC KIT | 1 |
| 12.1 | | > NUT-H-M10-A4.70 | 1 |
| 12.2 | | > SERRATED LOCK WASHER M+6M3-316L | 1 |
| 12.3 | | > 1/2-SNAP-RING-6/10M3-316L | 1 |
| 12.4 | | > STOP-RUSH-1/2-D16xd2-M+316 | 1 |
| 4.11 | | > SCREW CHC-M6X14-8.8-ISO4762-GEOMET500A | 1 |
| 4.12 | | > WASHER D.24 L6U ZINK | 1 |
| 13 | | HYDRAULIC HELIX V 604 1.4307 | 1 |

| Item | Article no. | Description | Quantity |
|---|---|---|---|
| 14 | 4214495 | SHAFT D.16X278 HELIX 1.4057 VP. | 1 |
| 15 | 4217897 | PUMP HOUSING HELIX DN32 PN16 1.4301 KIT | 1 |
| 7.3 | 4176513 | > O-RING FOR PUMP JACKET VP. | 1 |
| 15.1 | | > BLASTING PPE HOUSING V-PN16-DN32-5"-304 | 1 |
| 15.2 | 4217891 | > COUNTER FLANGE-G1"1/4-PN16-GJL KIT | 1 |
| 15.3 | 4171321 | > PRIMING/DRAIN PLUG EPDM HELIX KIT | 1 |
| 16 | 4177964 | BASEPLATE HELIX V2/4/6 PN16 VP. | 1 |

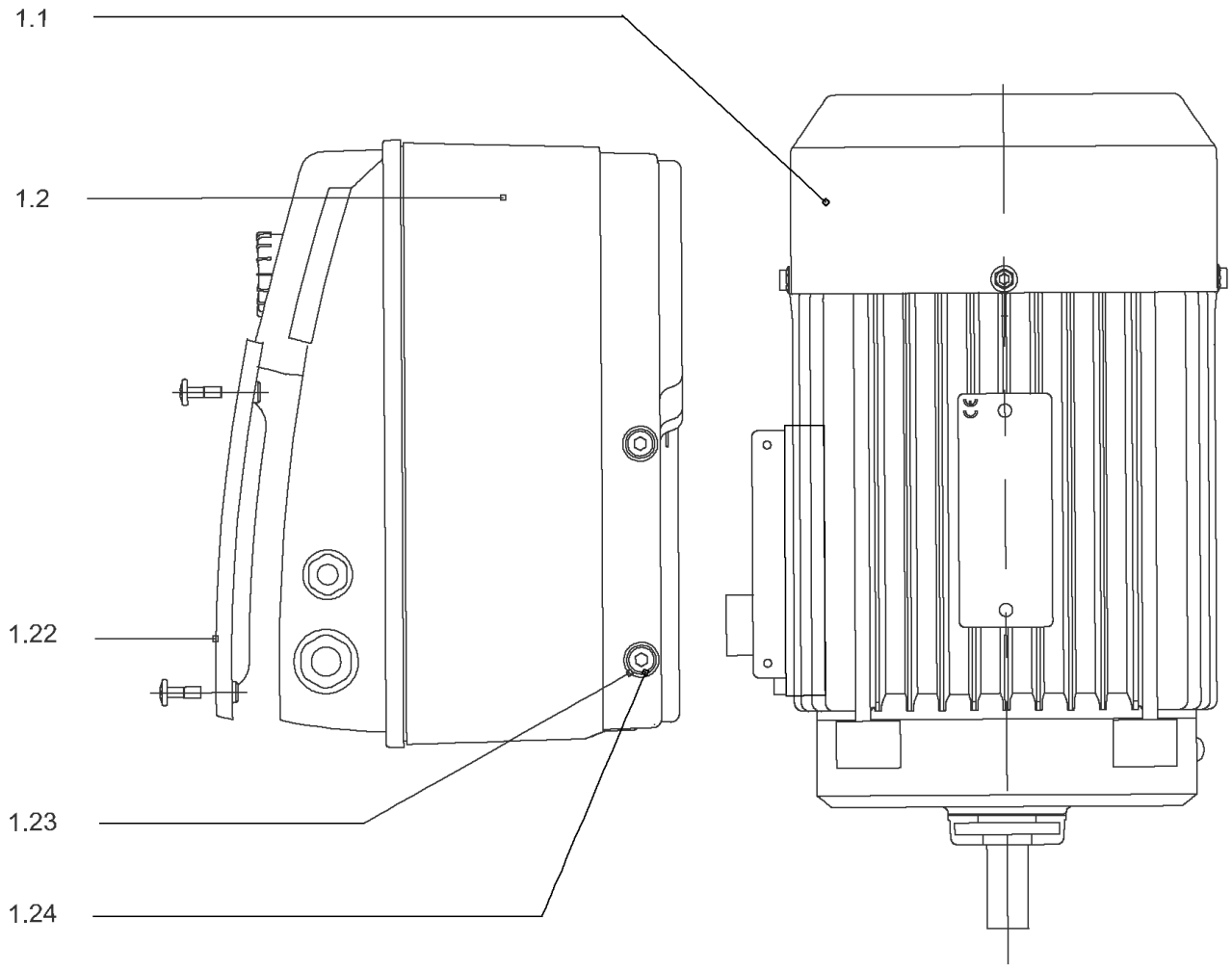
1.1
1.2
1.22
1.23
1.24

## DRIVE HELIX-VE604-IE4-WE KIT

| Item | Article no. | Description | Quantity |
|---|---|---|---|
| 1.1 | 4207918 | MOTOR 1.5/2/90 3~ 380V 60HZ IE4 WE VP. | 1 |
| | | SPARE PARTS MOTOR:ON REQUEST | 1 |
| 1.2 | 4209316 | MODULE HELIX-VE604-IE4-WE KIT | 1 |
| 1.22 | 2054227 | > MODULE COVER/GASKET TL3/4 KIT | 1 |
| 1.23 | 4215716 | > SCREW M5X16 DIN912 8.8 A2A (4pieces) VP. | 1 |
| 1.24 | 2057978 | > RONDELLE A5,3 DIN6797 FST ZN (4 PIECES) | 1 |

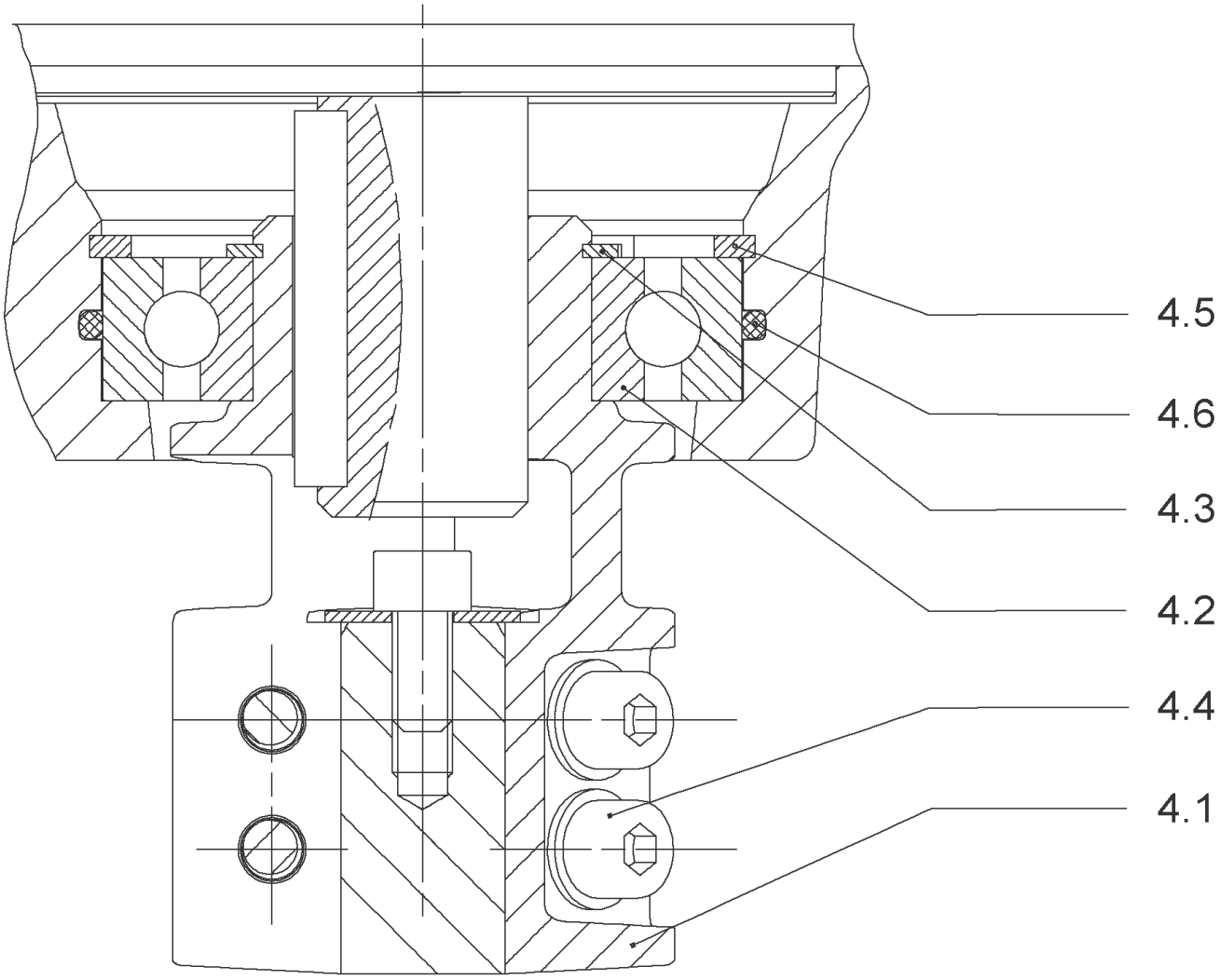
4.5
4.6
4.3
4.2
4.4
4.1

## COUPLING D.16xD.24 FT115 HELIX KIT (4159709)

| Item | Article no. | Description | Quantity |
|---|---|---|---|
| 4.1 | | COUPLING M+ Ø16XØ24 FT115 MACHINED | 1 |
| 4.2 | 2131023 | BALL BEARING 6207/ZZ-C3(HT)VP. | 1 |
| 4.3 | 4234254 | CIRCLIP-FOR-SHAFT-D35x1.5 VP. | 1 |
| 4.4 | 4157726 | SCREW KIT M8X30 (4 PIECES) | 1 |
| 4.5 | 4234251 | CIRCLIP-D72x2.5 VP. | 1 |
| 4.6 | 4234246 | O-RING 72X3 VP. | 1 |
| | | NOMEL CONTACT WASHER 8x16x1,4 STEEL ZC | 1 |

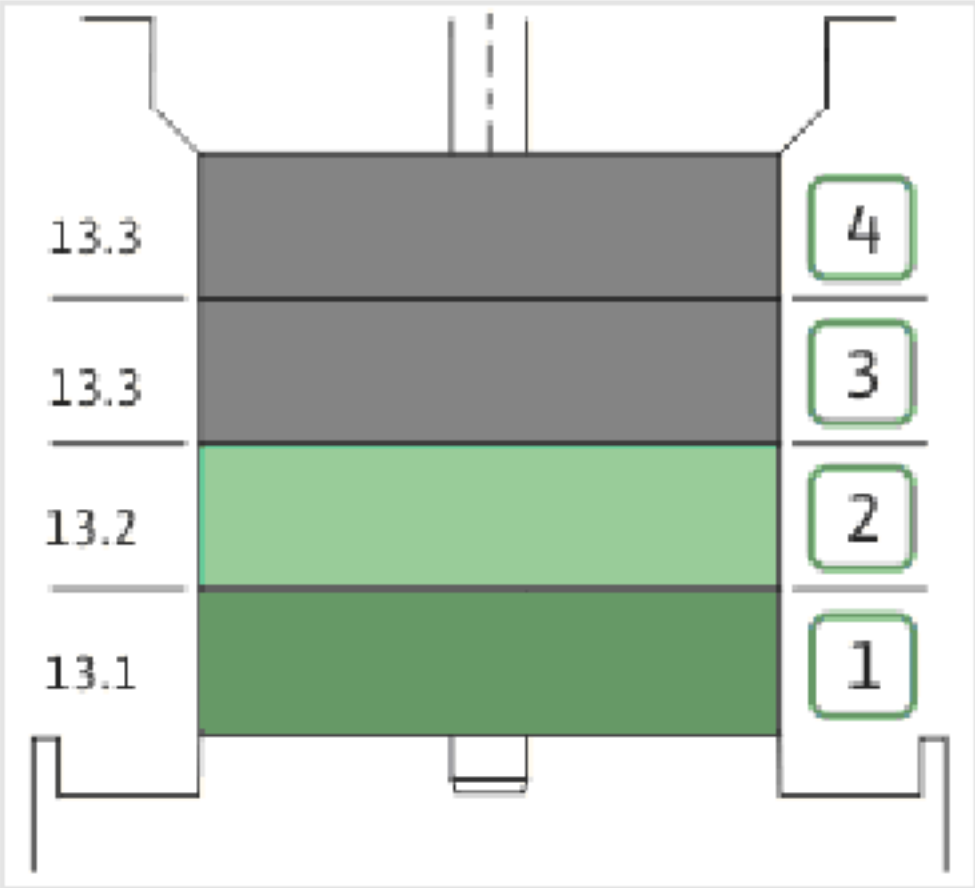
13.3
13.3
13.2
13.1
4
3
2
1

| Item | Article no. | Description | Quantity |
|---|---|---|---|
| 13.1 | 4174084 | STAGE HELIX 6 1.4301 KIT | 1 |
| | | > MACH.STG-CASING-WOGV-WNR-M+6-304 | 1 |
| | | > IMPELLER-M+6-304 | 1 |
| 13.2 | 4174089 | INTERMEDIATE STAGE HELIX 6 1.4301 KIT | 1 |
| | | > MACH.BEARING-STG-CASING-WNR-M+6-304 | 1 |
| | | > IMPELLER-M+6-304 | 1 |
| | | > SHAFT SLEEVE-SPACER-Ø19,35x18,465-304 | 1 |
| | | > SHAFT-SLEEVE-D16xD20x18-CW | 1 |
| 13.3 | 4174090 | INTERMEDIATE STAGE HELIX 6 1.4301 KIT | 1 |
| | | > MACH.STD-STG-CASING-WGV+NR-M+6-304 | 1 |
| | | > IMPELLER-M+6-304 | 1 |
| | | > IMPELLER SPACER Ø16,05X19,45-L36,465-304 | 1 |

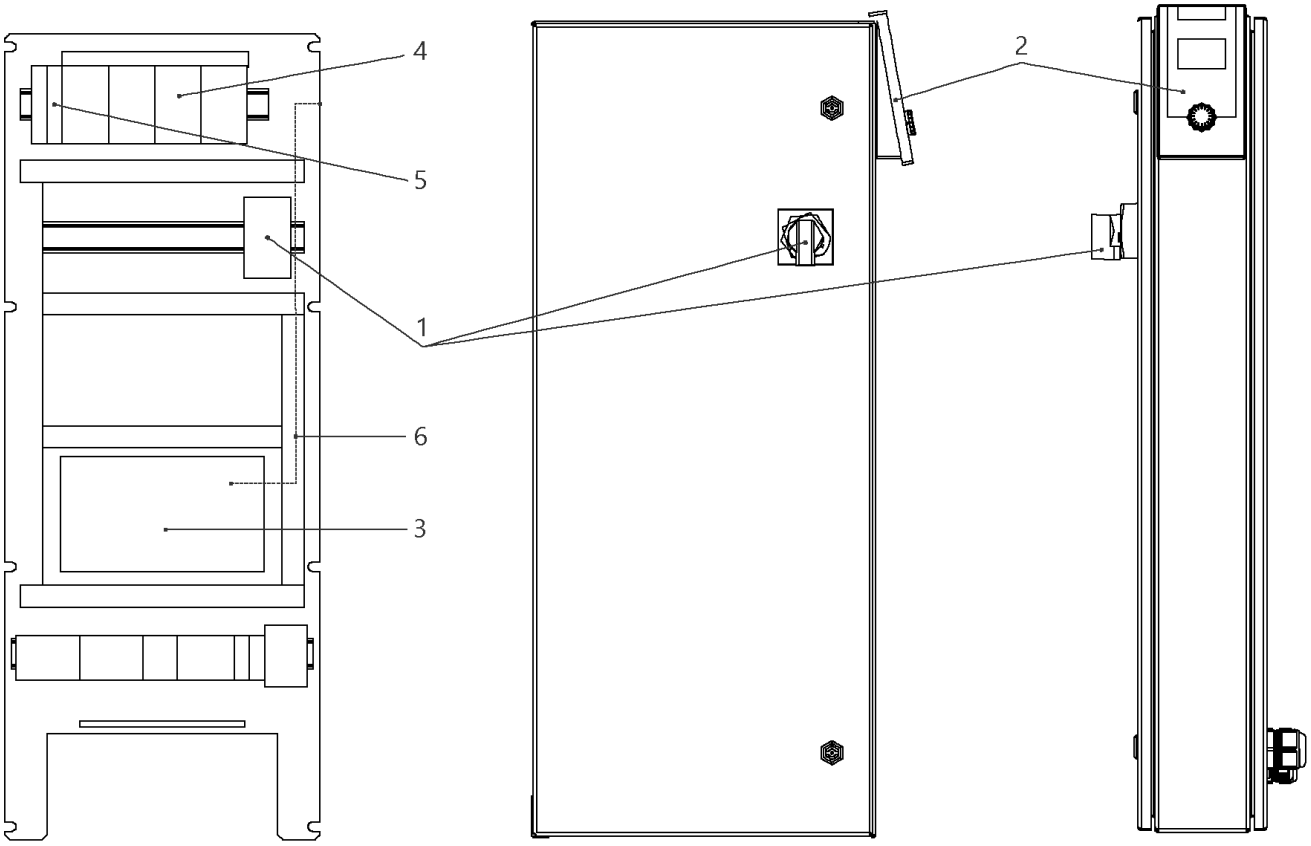
4
5
1
6
3
2

## W-CTRL-SCE-B-2x0,55-1,5KW-T4-FM-ND1

| Item | Article no. | Description | Quantity |
|---|---|---|---|
| 1 | 2104470 | MAIN SWITCH OT40F3 L250 KIT | 1 |
| 2 | 4184784 | CONTROL PANEL HMI SC KIT | 1 |
| 2 | 4185259 | ASSEMBLY DISPLAY SC PKG VP. | 1 |
| 3 | 4185257 | ASSEMBLY CPU SCe Booster VP. | 1 |
| 4 | 2051217 | AUTOM.CIRCUIT BREAKER S203 B16 TO7,5kW | 1 |
| 5 | 2046288 | CIRCUIT BREAKER S201 B16 | 1 |
| 6 | 4197081 | CABLE RJ45 CAT6 0,5M RED SC-PANEL VP. | 1 |

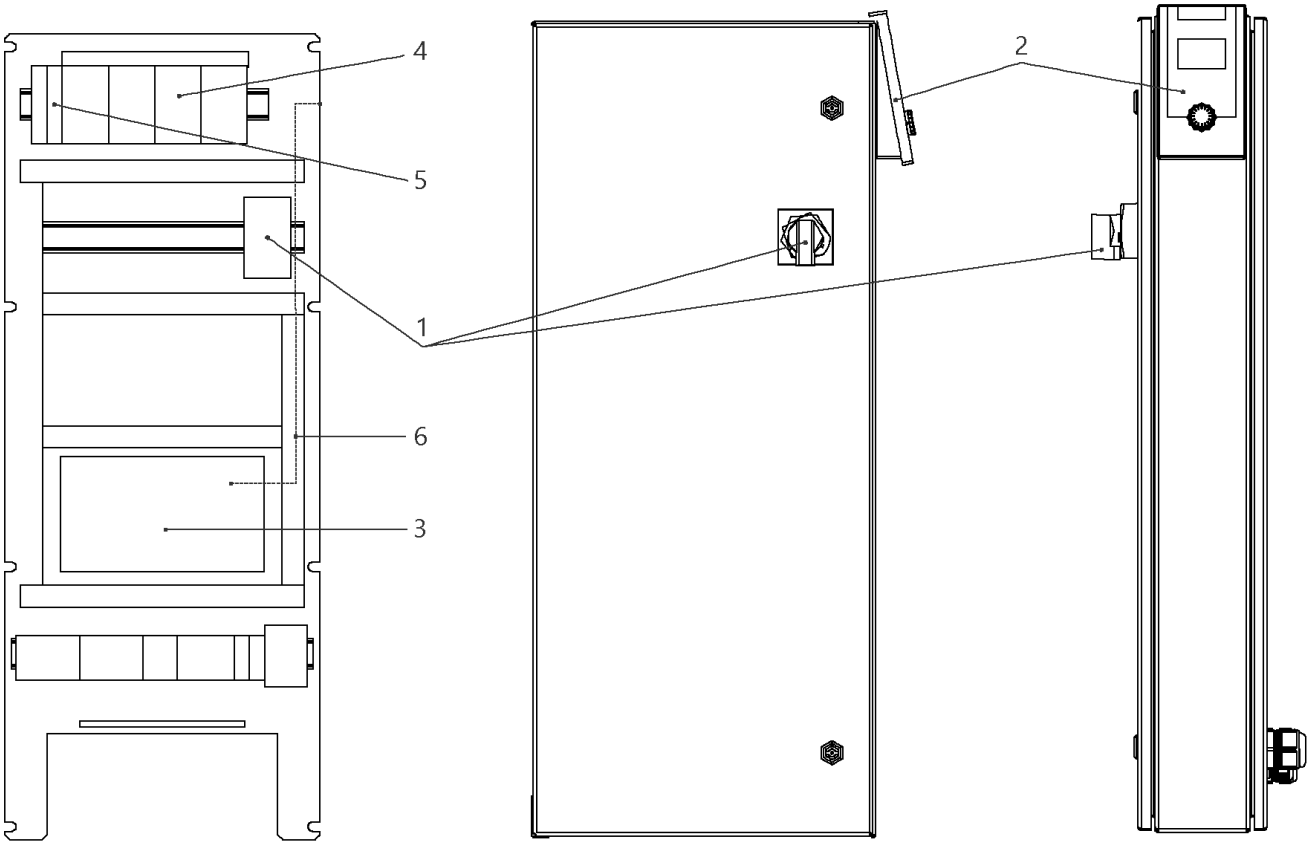
4
5
1
6
3
2

## W-CTRL-SCE-B-2x10A-T34-FM-ND1-AVC-PKG (2541913)

| Item | Article no. | Description | Quantity |
|---|---|---|---|
| 1 | 2104470 | MAIN SWITCH OT40F3 L250 KIT | 1 |
| 2 | 4184784 | CONTROL PANEL HMI SC KIT | 1 |
| 2 | 4185259 | ASSEMBLY DISPLAY SC PKG VP. | 1 |
| Note: DISPLAY ALONE / PLATINE SEULE | | | |
| 3 | 4185257 | ASSEMBLY CPU SCe Booster VP. | 1 |
| 4 | 2119861 | AUTOMATIC CIRCUIT BREAKER S203 B13 3POL. | 1 |
| 5 | 2046288 | CIRCUIT BREAKER S201 B16 | 1 |
| 6 | 4197081 | CABLE RJ45 CAT6 0,5M RED SC-PANEL VP. | 1 |

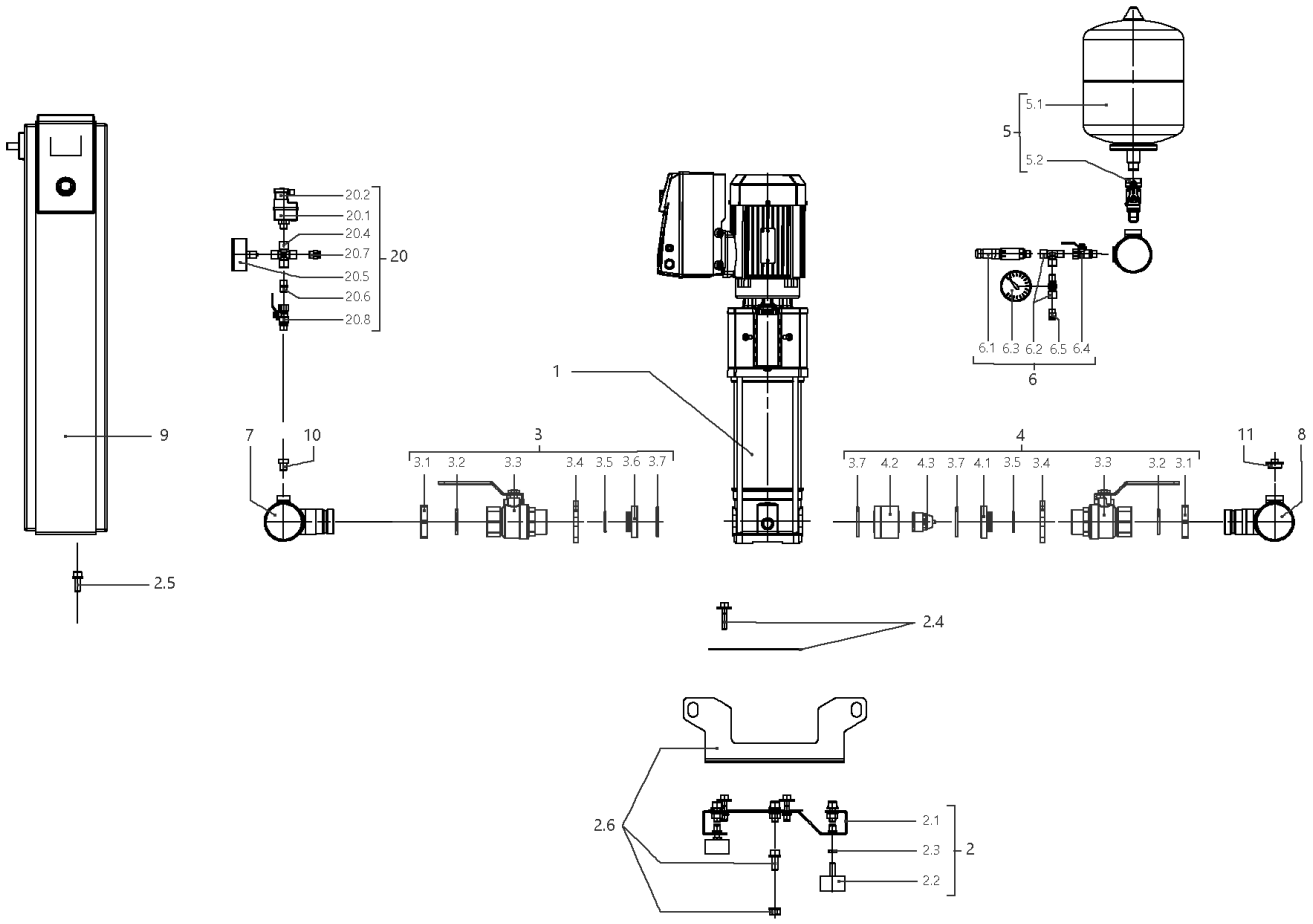
5.1
5
5.2
20.2
20.1
20.4
20.7
20
20.5
20.6
20.8
6.1 6.3 6.2 6.5 6.4
6
1
9
7
10
3
3.1 3.2 3.3 3.4 3.5 3.6 3.7
4
3.7 4.2 4.3 3.7 4.1 3.5 3.4 3.3 3.2 3.1
11
8
2.5
2.4
2.6
2.1
2.3
2
2.2

| Item | Article no. | Description | Quantity |
|---|---|---|---|
| 1 | | HELIX VE606-1/16/E/S | 1 |
| Note: TO / BIS / JUSQU'AU 31/03/2016 | | | |
| 1 | 4201583 | HELIX VE606-1/16/E/S | 1 |
| Note: FROM / AB / À PARTIR DU 01/04/2016 | | | |
| 2 | 4200135 | BASE PLATE DE2 850x420 KIT | 1 |
| Note: TO / BIS / JUSQU'AU 28/02/2013 | | | |
| 2.1 | | > BASEPLATE_2x4/6/10/16V_E300_BOX_150 | 1 |
| 2.2 | 2028654 | > VIBRATION DAMPER D.50X30 M10X28 | 1 |
| 2.3 | 2028281 | > NUT M10 DIN936 (ISO4035) 17H VZ | 1 |
| 2.4 | 4199875 | > HOLDER PUMP Siboost Helix V2/4 KIT | 1 |
| 2.5 | 4197084 | > HOLDER SWITCHBOX WILO Smart Control KIT | 1 |
| 2.6 | 4197117 | > LIFTING Siboost HELIX SC KIT | 1 |
| 2 | 4199874 | BASE PLATE DE2 850x300 M10 KIT | 1 |
| Note: FROM / AB / À PARTIR DU 01/03/2013 | | | |
| 2.1 | | > BASEPLATE_2x4/6/10V_E300_850x300_BOX_150 | 1 |
| 2.2 | 2028654 | > VIBRATION DAMPER D.50X30 M10X28 | 1 |
| 2.3 | 2028281 | > NUT M10 DIN936 (ISO4035) 17H VZ | 1 |
| 2.4 | 4199875 | > HOLDER PUMP Siboost Helix V2/4 KIT | 1 |
| 2.5 | 4197084 | > HOLDER SWITCHBOX WILO Smart Control KIT | 1 |
| 2.6 | 4197085 | > LIFTING Siboost HELIX SC KIT | 1 |
| 3 | 4199876 | SUCTION SIDE Siboost Helix V2/4/6 KIT | 1 |
| 3.1 | 2032610 | > NUT G11/4 MS VP. | 1 |
| 3.2 | 2032611 | > O-RING ID.36,09X3,53N DIN3771 E7502 | 1 |
| 3.3 | 2507646 | > BALL VALVE G11/4"M-F-W.HANDLE 1/4-TURN | 1 |
| 3.4 | 2032613 | > SCREWED FLANGE G1 1/4" LK-75 ST37VZ | 1 |
| 3.5 | 2032614 | > O-RING ID.29,82X2,62N DIN3771 E7502 | 1 |
| 3.6 | 2032615 | > SPACER F.I/A KUH.DN32 CUZN | 1 |
| 3.7 | 2032616 | > O-RING ID.44X3,53N DIN3771 E7502 | 1 |
| 4 | 4199877 | DELIVERY SIDE Siboost Helix V2/4/6 KIT | 1 |
| 3.1 | 2032610 | > NUT G11/4 MS VP. | 1 |
| 3.2 | 2032611 | > O-RING ID.36,09X3,53N DIN3771 E7502 | 1 |
| 3.3 | 2507646 | > BALL VALVE G11/4"M-F-W.HANDLE 1/4-TURN | 1 |
| 3.4 | 2032613 | > SCREWED FLANGE G1 1/4" LK-75 ST37VZ | 1 |
| 3.5 | 2032614 | > O-RING ID.29,82X2,62N DIN3771 E7502 | 1 |

| Item | Article no. | Description | Quantity |
|---|---|---|---|
| 4.1 | 2058116 | > SPACER F.I/A KUH.DN32 CUZN | 1 |
| 3.7 | 2032616 | > O-RING ID.44X3,53N DIN3771 E7502 | 1 |
| 4.2 | 2058115 | > HOUSING RFV(RV-IN) DN32 SGS/DRS | 1 |
| 4.3 | 2027870 | > NON-RETURN-DEVICE INSERT DN32(MTR) | 1 |
| 5 | 2032642 | DIAPHREM TANK 8L/PN16 DIN4807/T5 KIT | 1 |
| 5.1 | 2045914 | > DIAPHREM TANK 8L TYP-DD 16BAR | 1 |
| 5.2 | 2027853 | > FLOW FITTING G3/4 FOR DIAPHRAGM VES. | 1 |
| 6 | 4197076 | PRESSURE SENSOR/ GAUGE 0-16BAR KIT | 1 |
| 6.1 | 2085909 | > PRESS.SENSOR 1/4" 0-16BAR 4-20MA VP. | 1 |
| 6.2 | 4197077 | > T-PIECE 1/4" VP. | 1 |
| 6.3 | 2028692 | > PRESSURE GAUGE NG63-PN16-G1/4 | 1 |
| 6.4 | 2028291 | > BALL TAP R1/4" PN42 GIACOMINI R254DL | 1 |
| 6.5 | 2028691 | > BLOWGUN 1/4" MS 30BAR VP. | 1 |
| 7 | 4200092 | PIPE DE2 2''-2x1"1/4+1x1/4x600 VP. | 1 |
| 8 | 4200093 | PIPE DE2 2''-2x11/4"+1x1/4+1x3/4x600 VP. | 1 |
| 9 | | W-CTRL-SCE-B-2x2,2KW-T4-FM-ND2 | 1 |
| Note: TO / BIS / JUSQU'AU 28/02/2013 | | | |
| 9 | | W-CTRL-SCE-B-2x2,2-3,0KW-T4-FM-ND1 | 1 |
| Note: FROM / AB / À PARTIR DU 01/03/2013 - TO / BIS / JUSQU'AU 18/05/2014 | | | |
| 9 | 2541913 | W-CTRL-SCE-B-2x10A-T34-FM-ND1-AVC-PKG | 1 |
| Note: FROM / AB / À PARTIR DU 19/05/2014 | | | |
| 10 | 4197079 | PLUG G1/4"x10 AISI304 KIT | 1 |
| 11 | 2032654 | PLUG R3/4" MS VIEGA 1751 | 1 |
| 20 | 2521150 | ASSEMBLY WMS. DE-EB. +VP | 1 |
| 20.1 | 2028652 | > PRESSURE SWITCH PS3-ASR 1/(1,3) VP. | 1 |
| 20.2 | 2130983 | > PLUG PS3-415 WITH KABEL 1,5M 2NO VP. | 1 |
| 20.4 | 2028290 | > CROSSPIECE R1/4" MS-NICKEL | 1 |
| 20.5 | 2028687 | > PRESSURE GAUGE NG63 R1/4" HI.0-6BAR | 1 |
| 20.6 | 2054268 | > DUAL NIPPLE G1/4" x G1/4" MS VP. | 1 |
| 20.7 | 2028691 | > BLOWGUN 1/4" MS 30BAR VP. | 1 |
| 20.8 | 2028291 | > BALL TAP R1/4" PN42 GIACOMINI R254DL | 1 |

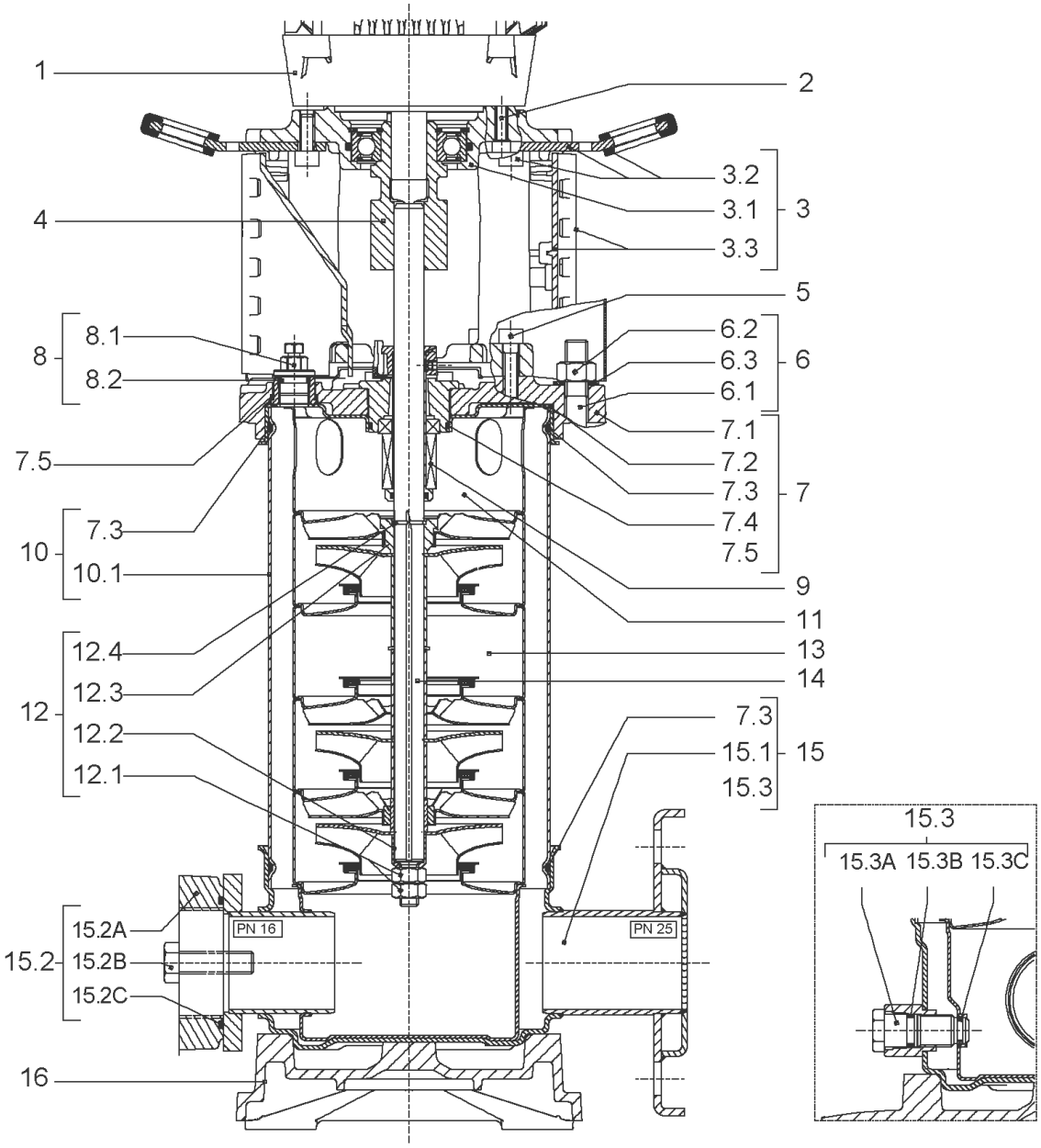
1
2
3.2
3.1
3
3.3
4
5
8.1
8
8.2
6.2
6.3
6
6.1
7.1
7.5
7.2
7.3
7
7.4
7.3
10
7.5
10.1
9
11
12.4
13
12.3
14
12
12.2
7.3
15.1
15
12.1
15.3
15.3
15.3A 15.3B 15.3C
15.2A
PN 16
PN 25
15.2
15.2B
15.2C
16

| Item | Article no. | Description | Quantity |
|---|---|---|---|
| 1 | | DRIVE HELIX-VE606-IE2-WE KIT | 1 |
| Note: MOTOR BRAND WILO ELEC | | | |
| 1 | | DRIVE HELIX-VE606-IE4-WE KIT | 1 |
| Note: MOTOR BRAND WILO ELEC | | | |
| 2 | 4159703 | SCREW M8X40 (4 PIECES) | 1 |
| 3 | 4172795 | LANTERNE FT115 HELIX KIT | 1 |
| 3.1 | | > M+5_6_LANTERN_ONE-PIECE_FT115_CATA | 1 |
| 3.2 | 2127604 | > EYELET CPL.FT HELIX(2 PIECES) | 1 |
| 3.3 | 4159692 | > COUPLING PROTECTOR FT HELIX KIT | 1 |
| 4 | 4159709 | COUPLING D.16xD.24 FT115 HELIX KIT | 1 |
| 5 | 4159707 | SCREW M8X30 (4 PIECES) | 1 |
| 6 | 4177822 | STUD BOLT M12X413 KIT | 1 |
| 6.1 | | > TIE BOLT M12-413x18x30-1.4057 | 1 |
| 6.2 | 2094647 | > NUT M12 M12 ISO4032 VP. | 1 |
| 6.3 | 2123557 | > WASHER CS-12.4-24-1.6-NFE25 (4 PIECES) | 1 |
| 7 | 4210143 | STATIONARY RING HOLDER HELIX 6" EPDM | 1 |
| 7.2 | 2127607 | > STATIONARY RING HOLDER 6" HELIX 1.4301 V | 1 |
| 7.3 | 4176513 | > O-RING FOR PUMP JACKET VP. | 1 |
| 7.4 | 2127603 | > O-RING ID.37,6x2,4 EPDM VP. | 1 |
| 7.5 | 2127602 | > O-RING ID.21,35x2 EPDM VP. | 1 |
| 8 | 4159686 | FILING/PURGING PLUG HELIX EPDM KIT | 1 |
| 9 | 4171327 | SEAL-KIT-HELIX6-10-16 O/E KIT | 1 |
| 10 | 4177823 | HOUSING PIPES D.152X285 1.4301 KIT | 1 |
| 7.3 | 4176513 | > O-RING FOR PUMP JACKET VP. | 1 |
| 10.1 | | > HOUSING-PIPE Ø152-M+1006-304 | 1 |
| 11 | 4174087 | CENTERING STAGE-RETURN HELIX6 1.4301VP. | 1 |
| 12 | 4174086 | SHAFTS EQUIPMENT HELIX V6 MONOBLOC KIT | 1 |
| 12.1 | | > NUT-H-M10-A4.70 | 1 |
| 12.2 | | > SERRATED LOCK WASHER M+6M3-316L | 1 |
| 12.3 | | > IMPELLER STOP RING L33,2-304 | 1 |
| 12.4 | | > STOP-RUSH-1/2-D16xd2-M+316 | 1 |
| 13 | | HYDRAULIC HELIX V 606 1.4307 | 1 |
| 14 | 4177825 | SHAFT D.16X405 1.4301 VP. | 1 |
| 15 | 4217897 | PUMP HOUSING HELIX DN32 PN16 1.4301 KIT | 1 |

| Item | Article no. | Description | Quantity |
|---|---|---|---|
| 7.3 | 4176513 | > O-RING FOR PUMP JACKET VP. | 1 |
| 15.1 | | > BLASTING PPE HOUSING V-PN16-DN32-5"-304 | 1 |
| 15.2 | 4217891 | > COUNTER FLANGE-G1"1/4-PN16-GJL KIT | 1 |
| 15.3 | 4171321 | > PRIMING/DRAIN PLUG EPDM HELIX KIT | 1 |
| 16 | 4177964 | BASEPLATE HELIX V2/4/6 PN16 VP. | 1 |

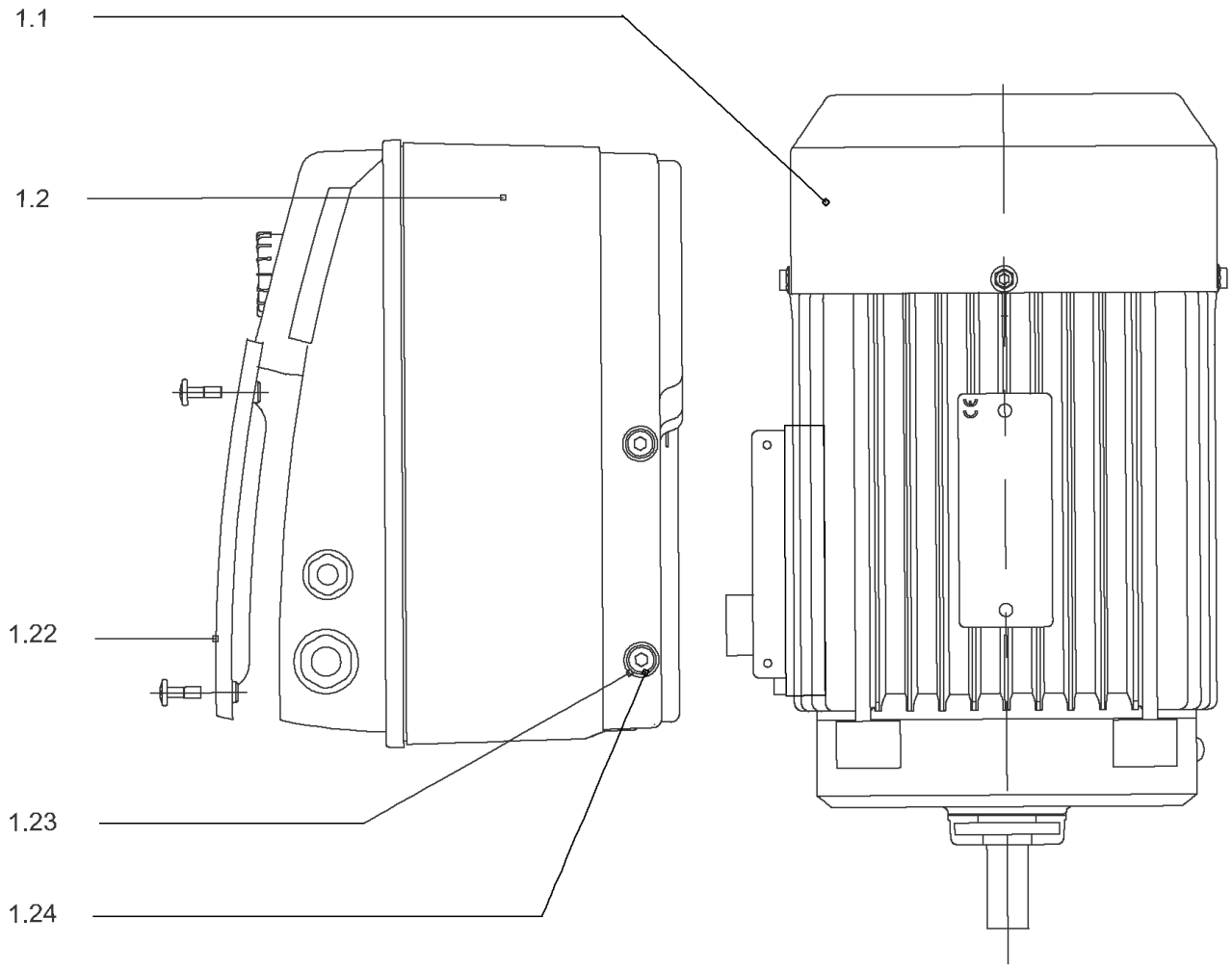
1.1
1.2
1.22
1.23
1.24

## DRIVE HELIX-VE606-IE2-WE KIT

| Item | Article no. | Description | Quantity |
|---|---|---|---|
| 1.1 | 4185016 | MOTOR 2,2/2/90 3~ 380V 60HZ IE2 WE VP. | 1 |
| | | SPARE PARTS MOTOR:ON REQUEST | 1 |
| 1.2 | 4186769 | MODULE HELIX-VE606-IE2-WE KIT | 1 |
| 1.22 | 2054227 | > MODULE COVER/GASKET TL3/4 KIT | 1 |
| 1.23 | 4215716 | > SCREW M5X16 DIN912 8.8 A2A (4pieces) VP. | 1 |
| 1.24 | 2057978 | > RONDELLE A5,3 DIN6797 FST ZN (4 PIECES) | 1 |

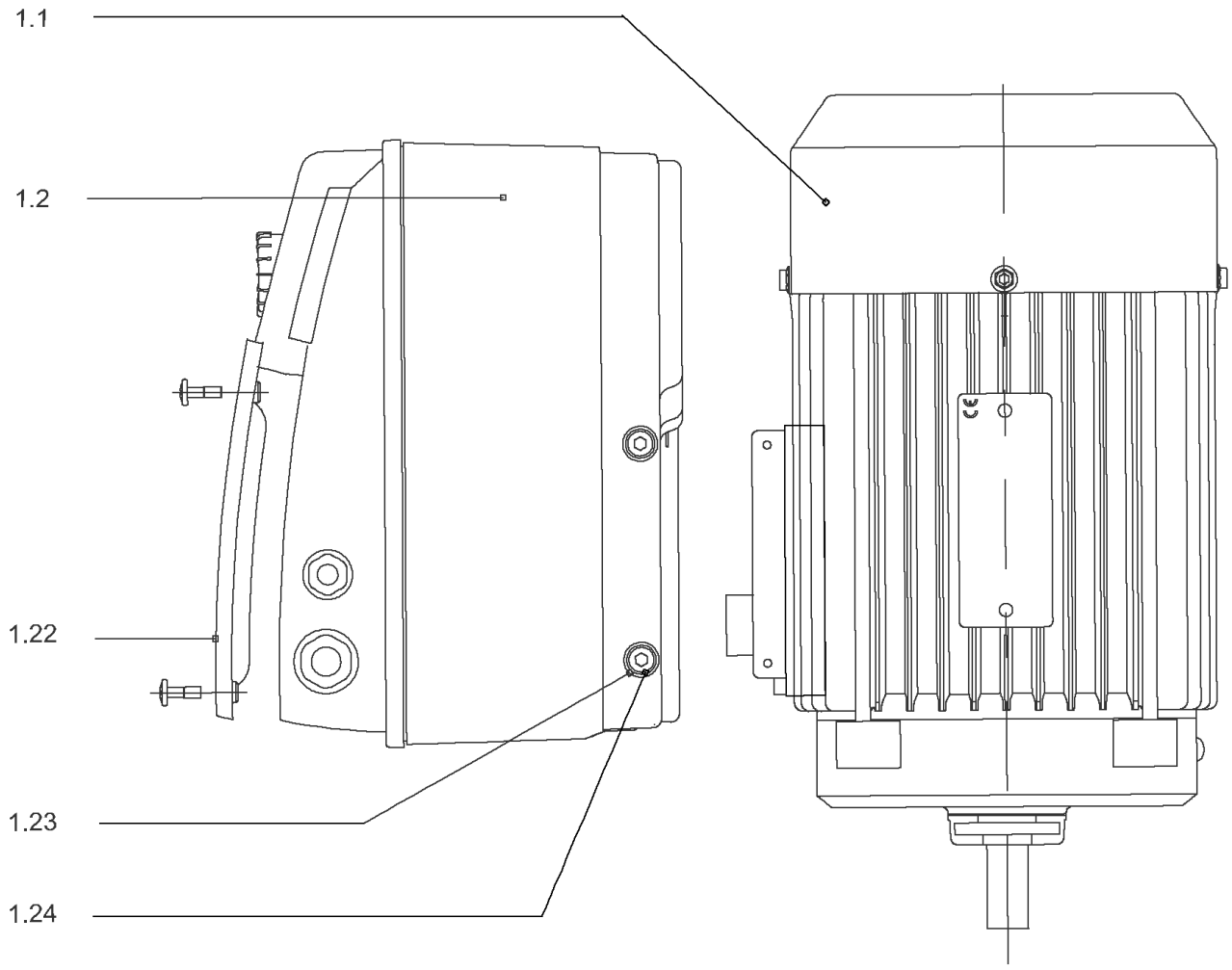
1.1
1.2
1.22
1.23
1.24

## DRIVE HELIX-VE606-IE4-WE KIT

| Item | Article no. | Description | Quantity |
|---|---|---|---|
| 1.1 | 4207920 | MOTOR 2.2/2/90 3~ 380V 60HZ IE4 WE VP. | 1 |
| | | SPARE PARTS MOTOR:ON REQUEST | 1 |
| 1.2 | 4209368 | MODULE HELIX-VE606-IE4-WE KIT | 1 |
| 1.22 | 2054227 | > MODULE COVER/GASKET TL3/4 KIT | 1 |
| 1.23 | 4215716 | > SCREW M5X16 DIN912 8.8 A2A (4pieces) VP. | 1 |
| 1.24 | 2057978 | > RONDELLE A5,3 DIN6797 FST ZN (4 PIECES) | 1 |

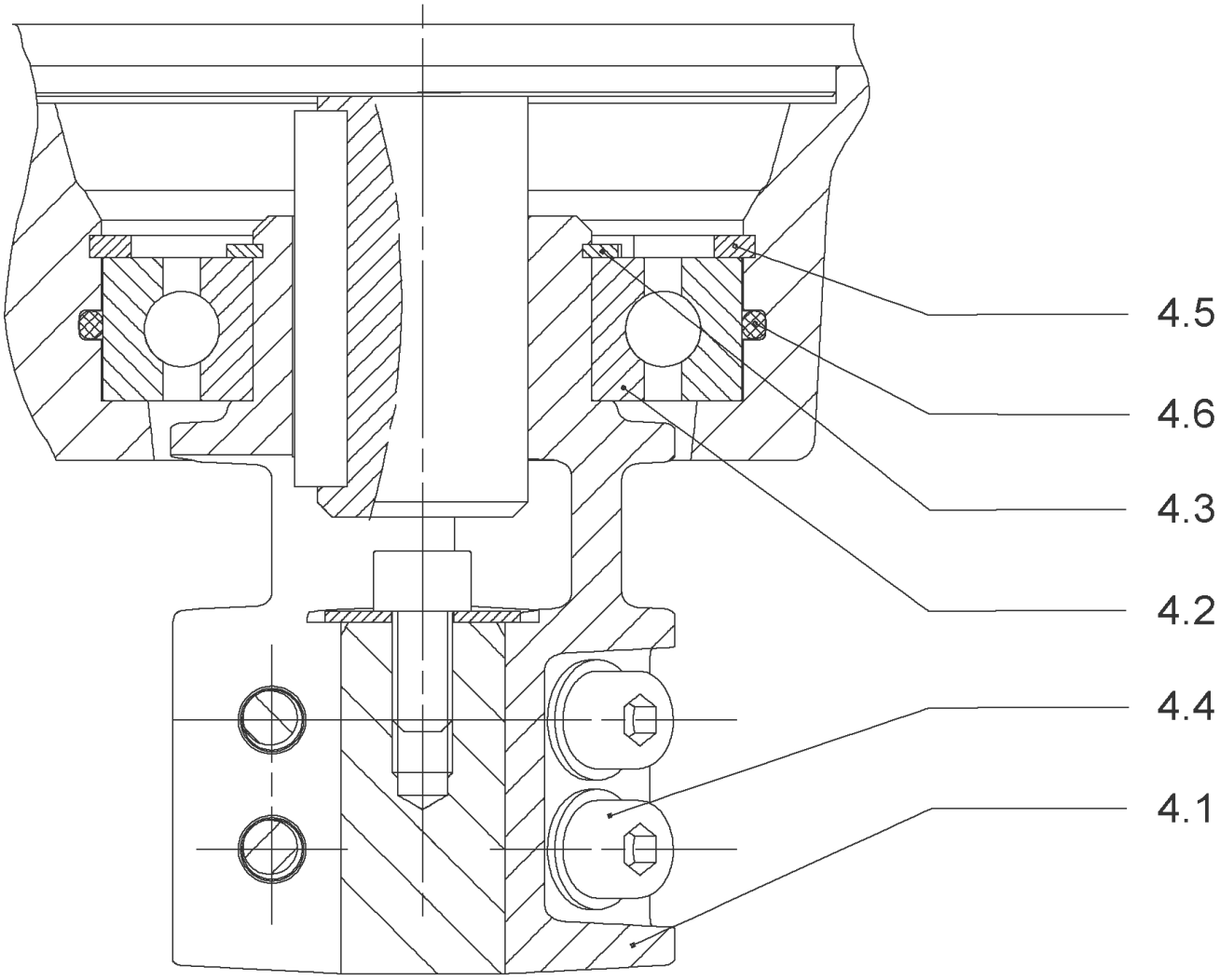
4.5
4.6
4.3
4.2
4.4
4.1

## COUPLING D.16xD.24 FT115 HELIX KIT (4159709)

| Item | Article no. | Description | Quantity |
|---|---|---|---|
| 4.1 | | COUPLING M+ Ø16XØ24 FT115 MACHINED | 1 |
| 4.2 | 2131023 | BALL BEARING 6207/ZZ-C3(HT)VP. | 1 |
| 4.3 | 4234254 | CIRCLIP-FOR-SHAFT-D35x1.5 VP. | 1 |
| 4.4 | 4157726 | SCREW KIT M8X30 (4 PIECES) | 1 |
| 4.5 | 4234251 | CIRCLIP-D72x2.5 VP. | 1 |
| 4.6 | 4234246 | O-RING 72X3 VP. | 1 |
| | | NOMEL CONTACT WASHER 8x16x1,4 STEEL ZC | 1 |

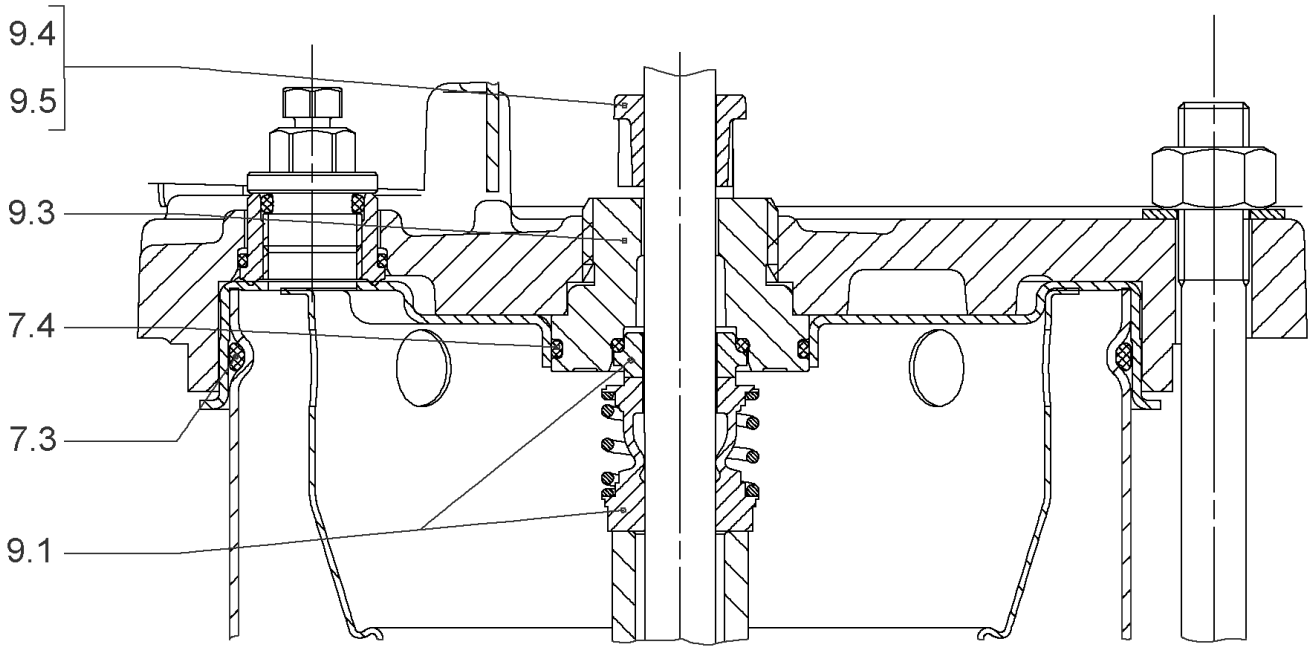
9.4
9.5
9.3
7.4
7.3
9.1

## SEAL-KIT-HELIX6-10-16 O/E KIT (4171327)

| Item | Article no. | Description | Quantity |
|---|---|---|---|
| 7.3 | 4176513 | O-RING FOR PUMP JACKET VP. | 1 |
| 7.4 | 2127603 | O-RING ID.37,6x2,4 EPDM VP. | 1 |
| 9.1 | 4177801 | MECH.SEAL HELIX6-10-16 O/E VP. | 1 |
| 9.3 | 4177798 | MACHINED RING HOLDER M+6" Ø16 304 VP. | 1 |
| 9.5 | 4177799 | MACHINED DRIVE RING Ø16 VP. | 1 |
| 9.4 | 4176520 | SCREW CH M5x5 A4-70 ( 3PIECES ) | 1 |

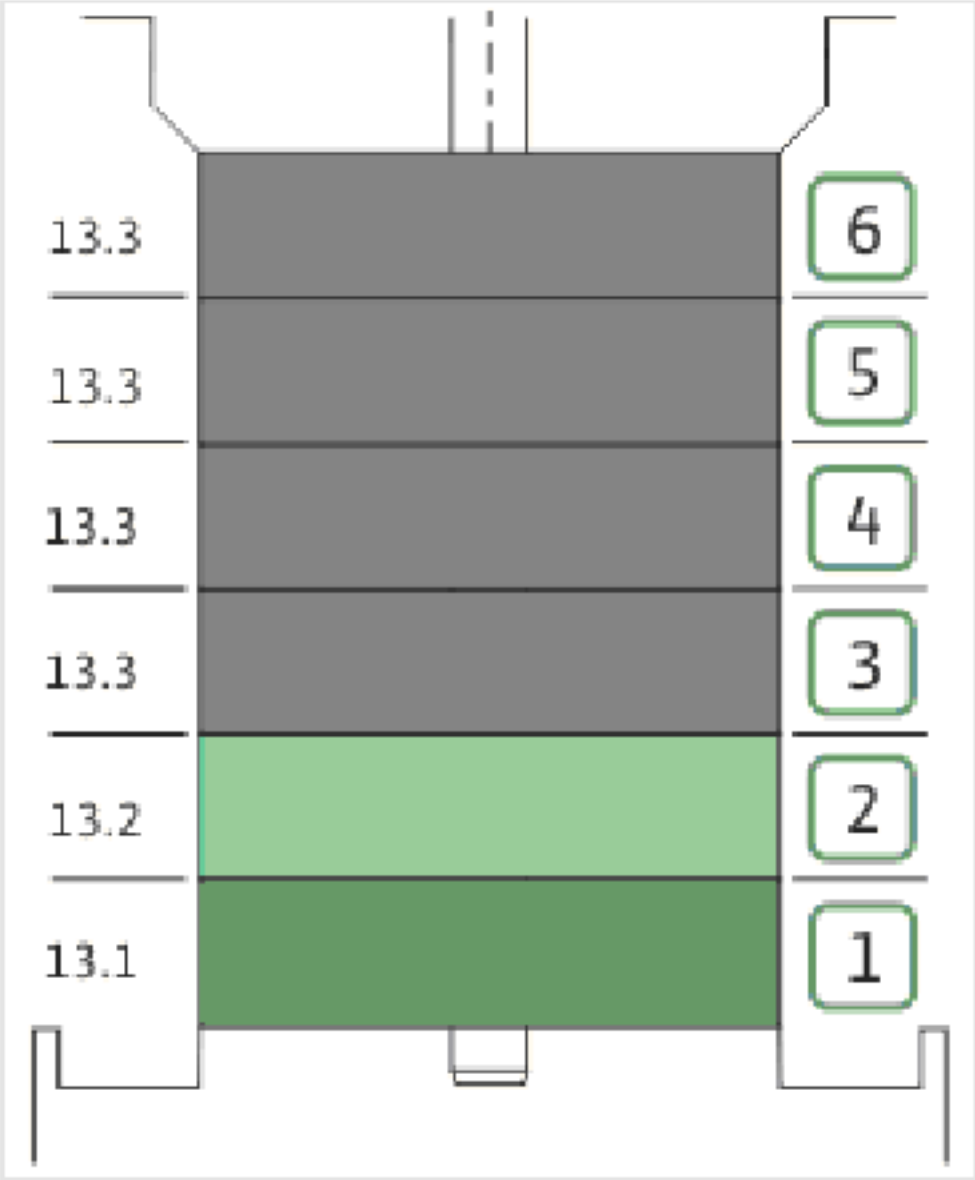
13.3
13.3
13.3
13.3
13.2
13.1
6
5
4
3
2
1

| Item | Article no. | Description | Quantity |
|---|---|---|---|
| 13.1 | 4174084 | STAGE HELIX 6 1.4301 KIT | 1 |
| | | > MACH.STG-CASING-WOGV-WNR-M+6-304 | 1 |
| | | > IMPELLER-M+6-304 | 1 |
| 13.2 | 4174089 | INTERMEDIATE STAGE HELIX 6 1.4301 KIT | 1 |
| | | > MACH.BEARING-STG-CASING-WNR-M+6-304 | 1 |
| | | > IMPELLER-M+6-304 | 1 |
| | | > SHAFT SLEEVE-SPACER-Ø19,35x18,465-304 | 1 |
| | | > SHAFT-SLEEVE-D16xD20x18-CW | 1 |
| 13.3 | 4174090 | INTERMEDIATE STAGE HELIX 6 1.4301 KIT | 1 |
| | | > MACH.STD-STG-CASING-WGV+NR-M+6-304 | 1 |
| | | > IMPELLER-M+6-304 | 1 |
| | | > IMPELLER SPACER Ø16,05X19,45-L36,465-304 | 1 |

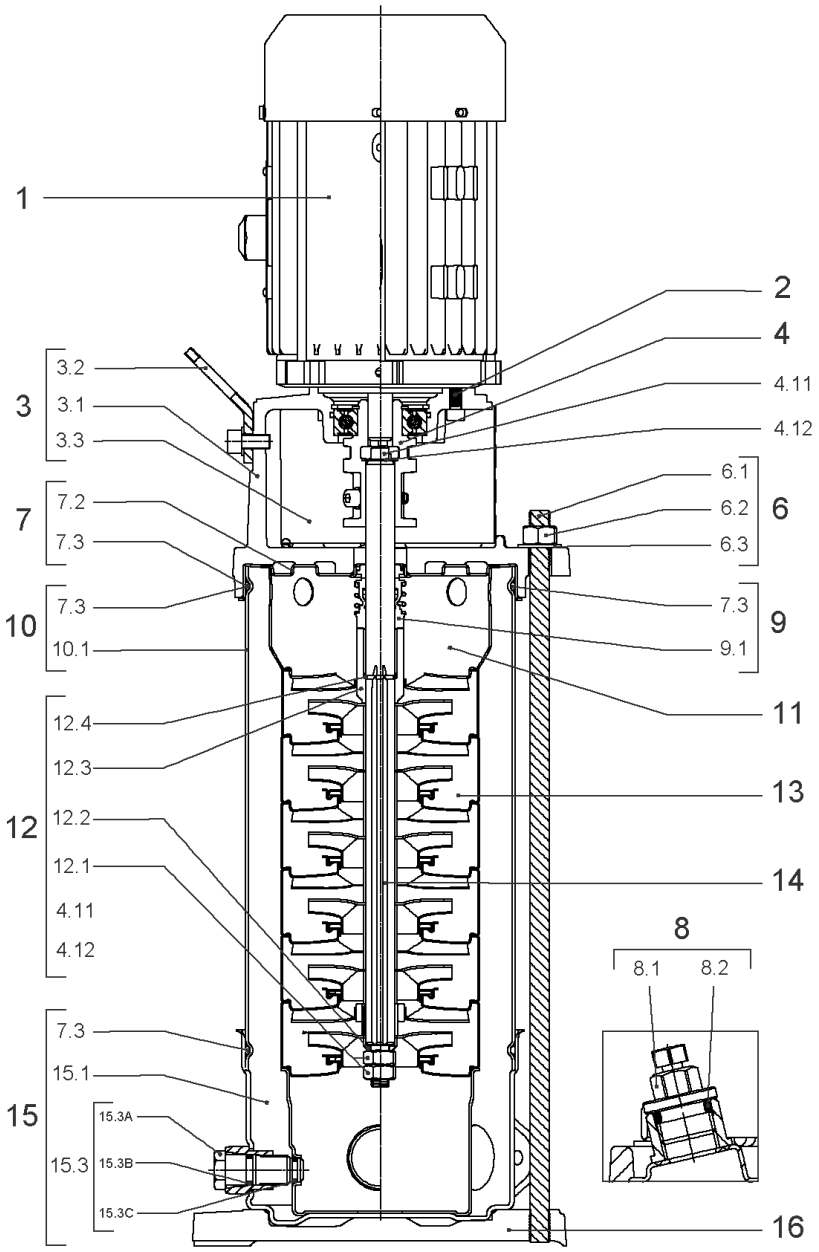
1
2
4
4.11
4.12
3
3.2
3.1
3.3
7
7.2
7.3
6
6.1
6.2
6.3
10
7.3
10.1
9
7.3
9.1
11
12
12.4
12.3
12.2
12.1
4.11
4.12
13
14
8
8.1
8.2
15
7.3
15.1
15.3
15.3A
15.3B
15.3C
16

## HELIX VE606-1/16/E/S (4201583)

| Item | Article no. | Description | Quantity |
|---|---|---|---|
| 1 | | DRIVE HELIX-VE606-IE4-WE KIT | 1 |
| Note: MOTOR BRAND WILO ELEC | | | |
| | | SPARE PARTS MOTOR:ON REQUEST | 1 |
| 2 | 4159707 | SCREW M8X30 (4 PIECES) | 1 |
| 3 | 4213784 | LANTERN FT115 HELIX KIT | 1 |
| 3.1 | | > LANT-MOT-VMI-ReDTC6"-FT115-MACHINED+CATA | 1 |
| 3.2 | 4184852 | > EYELET CPL.FT HELIX (2 PIECES) | 1 |
| 3.3 | 4213782 | > COUPLING PROTECTOR FT115/130 HELIX KIT | 1 |
| 4 | 4159709 | COUPLING D.16xD.24 FT115 HELIX KIT | 1 |
| 6 | 4177822 | STUD BOLT M12X413 KIT | 1 |
| 6.1 | | > TIE BOLT M12-413x18x30-1.4057 | 1 |
| 6.2 | 2094647 | > NUT M12 M12 ISO4032 VP. | 1 |
| 6.3 | 2123557 | > WASHER CS-12.4-24-1.6-NFE25 (4 PIECES) | 1 |
| 7 | 4214481 | STATIONARY RING HOLDER HELIX D27 ReDTC | 1 |
| 7.2 | 4214479 | > STATIONARY RING HOLDER HELIX D27 VP. | 1 |
| 7.3 | 4176513 | > O-RING FOR PUMP JACKET VP. | 1 |
| 8 | 4212724 | FILING/PURGING PLUG HELIX ReDTC KIT | 1 |
| 8.1 | | > FILLING PLUG MVI6"-304 | 1 |
| 8.2 | 4177800 | > O-RING EPDM PLUG HELIX VP. | 1 |
| 9 | 4214483 | MECH.SEAL HELIX6-10-16 O/E ReDTC KIT | 1 |
| 9.1 | 4177801 | > MECH.SEAL HELIX6-10-16 O/E VP. | 1 |
| 7.3 | 4176513 | > O-RING FOR PUMP JACKET VP. | 1 |
| 10 | 4177823 | HOUSING PIPES D.152X285 1.4301 KIT | 1 |
| 7.3 | 4176513 | > O-RING FOR PUMP JACKET VP. | 1 |
| 10.1 | | > HOUSING-PIPE Ø152-M+1006-304 | 1 |
| 11 | 4174087 | CENTERING STAGE-RETURN HELIX6 1.4301VP. | 1 |
| 12 | 4214486 | SHAFT EQUIPMENT HELIX V6 ReDTC KIT | 1 |
| 12.1 | | > NUT-H-M10-A4.70 | 1 |
| 12.2 | | > SERRATED LOCK WASHER M+6M3-316L | 1 |
| 12.3 | | > 1/2-SNAP-RING-6/10M3-316L | 1 |
| 12.4 | | > STOP-RUSH-1/2-D16xd2-M+316 | 1 |
| 4.11 | | > SCREW CHC-M6X14-8.8-ISO4762-GEOMET500A | 1 |
| 4.12 | | > WASHER D.24 L6U ZINK | 1 |
| 13 | | HYDRAULIC HELIX V 606 1.4307 | 1 |

## HELIX VE606-1/16/E/S (4201583)

| Item | Article no. | Description | Quantity |
|---|---|---|---|
| 14 | 4214500 | SHAFT D.16X353 HELIX 1.4057 VP. | 1 |
| 15 | 4217897 | PUMP HOUSING HELIX DN32 PN16 1.4301 KIT | 1 |
| 7.3 | 4176513 | > O-RING FOR PUMP JACKET VP. | 1 |
| 15.1 | | > BLASTING PPE HOUSING V-PN16-DN32-5"-304 | 1 |
| 15.2 | 4217891 | > COUNTER FLANGE-G1"1/4-PN16-GJL KIT | 1 |
| 15.3 | 4171321 | > PRIMING/DRAIN PLUG EPDM HELIX KIT | 1 |
| 16 | 4177964 | BASEPLATE HELIX V2/4/6 PN16 VP. | 1 |

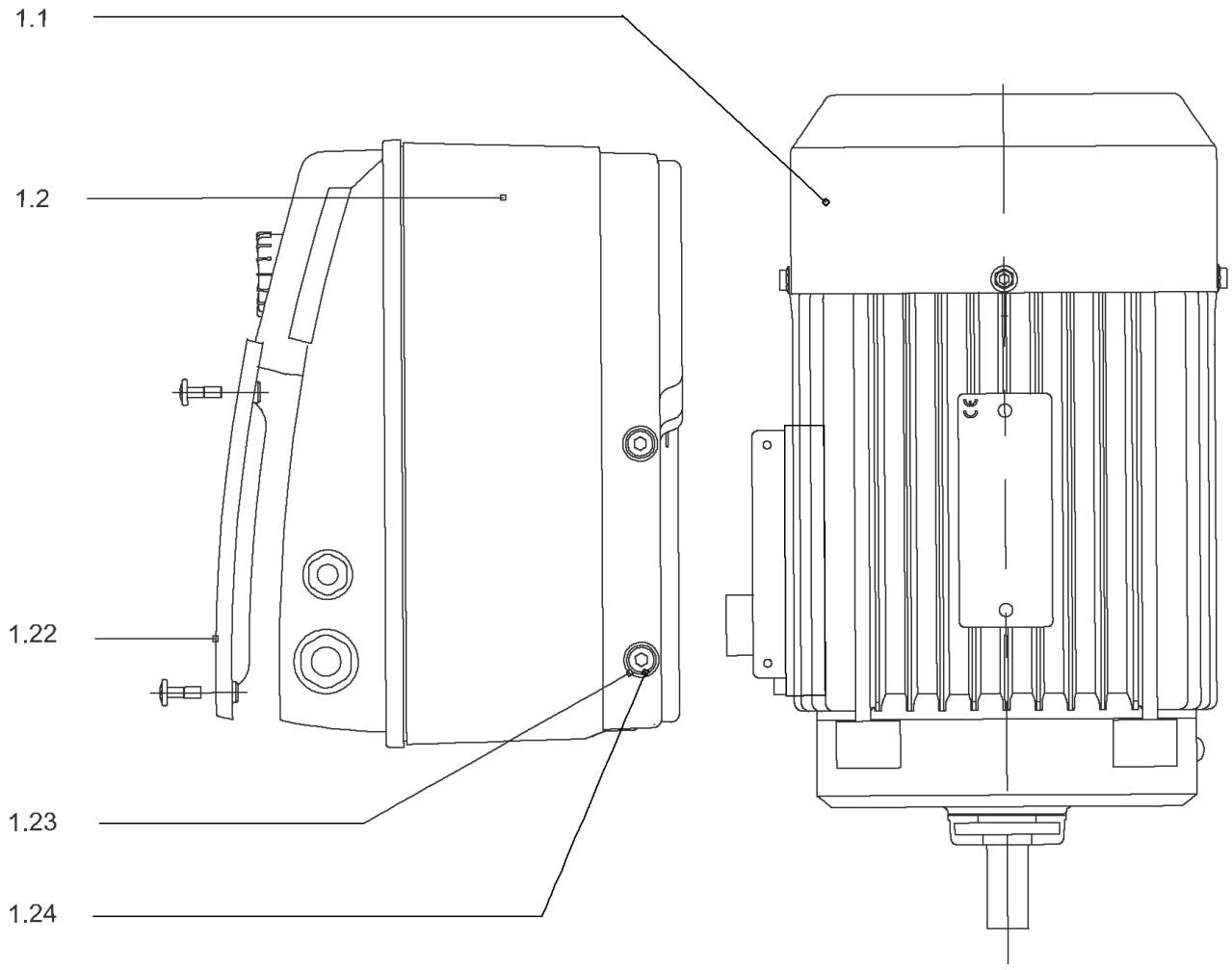
1.1
1.2
1.22
1.23
1.24

## DRIVE HELIX-VE606-IE4-WE KIT

| Item | Article no. | Description | Quantity |
|---|---|---|---|
| 1.1 | 4207920 | MOTOR 2.2/2/90 3~ 380V 60HZ IE4 WE VP. | 1 |
| | | SPARE PARTS MOTOR:ON REQUEST | 1 |
| 1.2 | 4209368 | MODULE HELIX-VE606-IE4-WE KIT | 1 |
| 1.22 | 2054227 | > MODULE COVER/GASKET TL3/4 KIT | 1 |
| 1.23 | 4215716 | > SCREW M5X16 DIN912 8.8 A2A (4pieces) VP. | 1 |
| 1.24 | 2057978 | > RONDELLE A5,3 DIN6797 FST ZN (4 PIECES) | 1 |

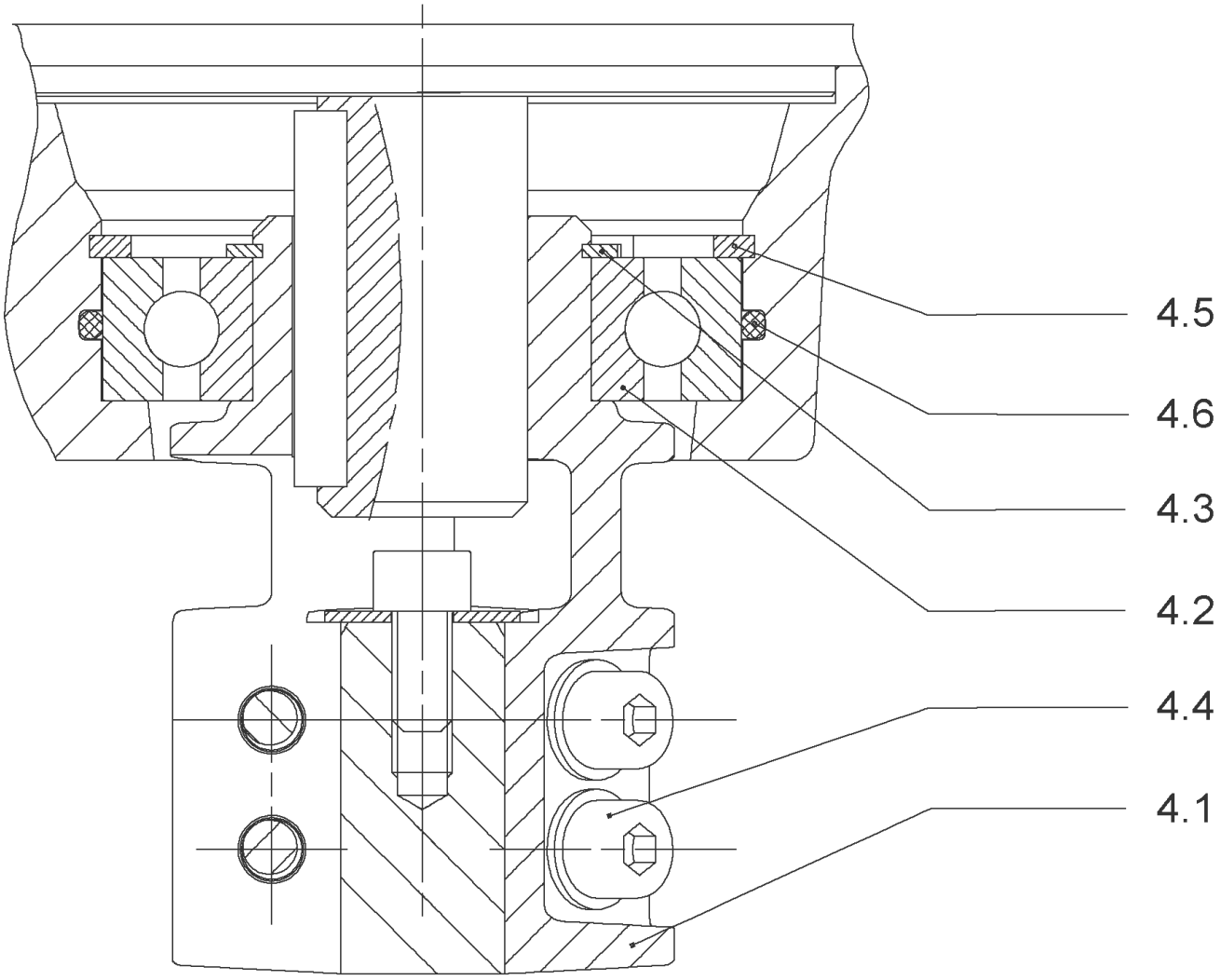
4.5
4.6
4.3
4.2
4.4
4.1

## COUPLING D.16xD.24 FT115 HELIX KIT (4159709)

| Item | Article no. | Description | Quantity |
|---|---|---|---|
| 4.1 | | COUPLING M+ Ø16XØ24 FT115 MACHINED | 1 |
| 4.2 | 2131023 | BALL BEARING 6207/ZZ-C3(HT)VP. | 1 |
| 4.3 | 4234254 | CIRCLIP-FOR-SHAFT-D35x1.5 VP. | 1 |
| 4.4 | 4157726 | SCREW KIT M8X30 (4 PIECES) | 1 |
| 4.5 | 4234251 | CIRCLIP-D72x2.5 VP. | 1 |
| 4.6 | 4234246 | O-RING 72X3 VP. | 1 |
| | | NOMEL CONTACT WASHER 8x16x1,4 STEEL ZC | 1 |

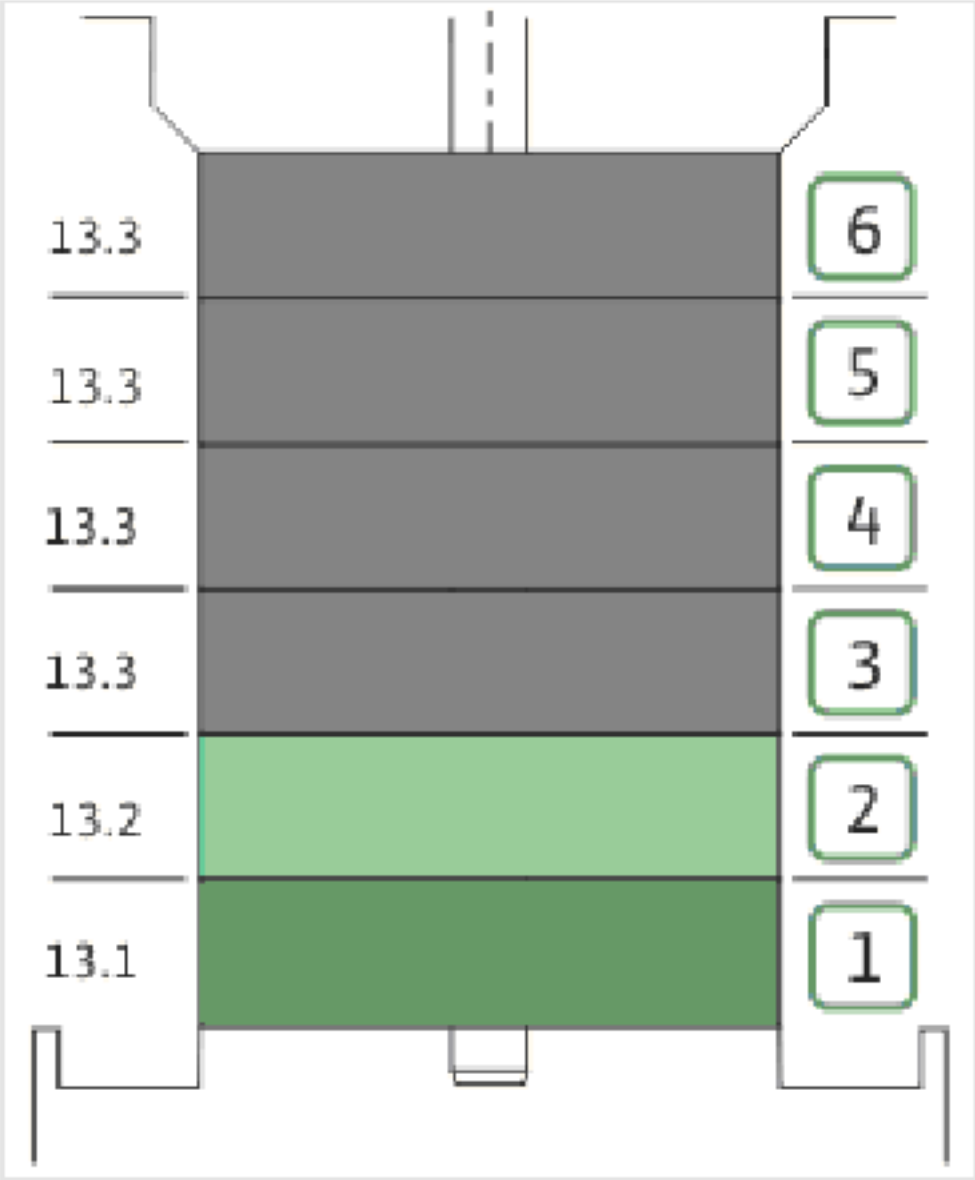
13.3
13.3
13.3
13.3
13.2
13.1
6
5
4
3
2
1

| Item | Article no. | Description | Quantity |
|---|---|---|---|
| 13.1 | 4174084 | STAGE HELIX 6 1.4301 KIT | 1 |
| | | > MACH.STG-CASING-WOGV-WNR-M+6-304 | 1 |
| | | > IMPELLER-M+6-304 | 1 |
| 13.2 | 4174089 | INTERMEDIATE STAGE HELIX 6 1.4301 KIT | 1 |
| | | > MACH.BEARING-STG-CASING-WNR-M+6-304 | 1 |
| | | > IMPELLER-M+6-304 | 1 |
| | | > SHAFT SLEEVE-SPACER-Ø19,35x18,465-304 | 1 |
| | | > SHAFT-SLEEVE-D16xD20x18-CW | 1 |
| 13.3 | 4174090 | INTERMEDIATE STAGE HELIX 6 1.4301 KIT | 1 |
| | | > MACH.STD-STG-CASING-WGV+NR-M+6-304 | 1 |
| | | > IMPELLER-M+6-304 | 1 |
| | | > IMPELLER SPACER Ø16,05X19,45-L36,465-304 | 1 |

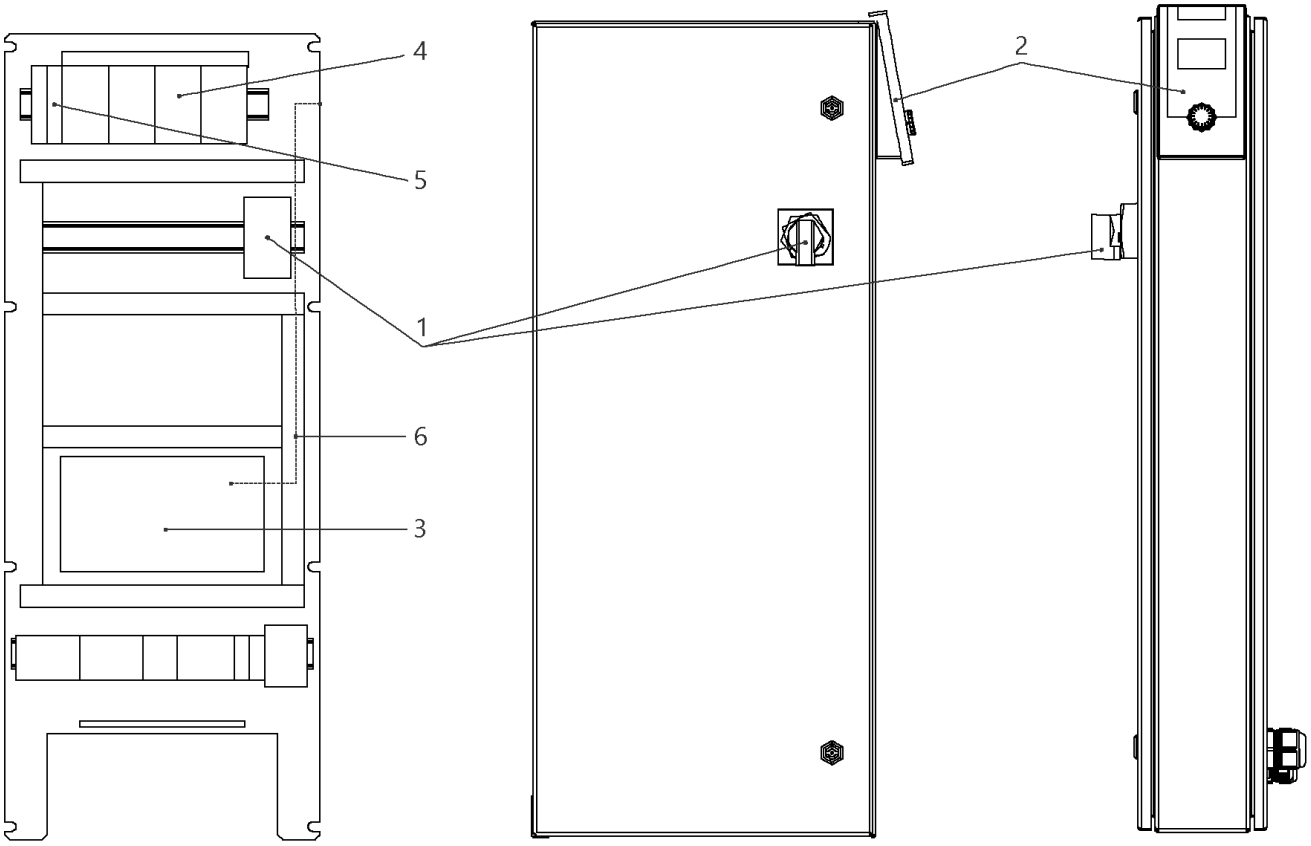
4
5
1
6
3
2

## W-CTRL-SCE-B-2x2,2KW-T4-FM-ND2

| Item | Article no. | Description | Quantity |
|---|---|---|---|
| 1 | 2104470 | MAIN SWITCH OT40F3 L250 KIT | 1 |
| 2 | 4184784 | CONTROL PANEL HMI SC KIT | 1 |
| 2 | 4185259 | ASSEMBLY DISPLAY SC PKG VP. | 1 |
| 3 | 4185257 | ASSEMBLY CPU SCe Booster VP. | 1 |
| 4 | 2051217 | AUTOM.CIRCUIT BREAKER S203 B16 TO7,5kW | 1 |
| 5 | 2046288 | CIRCUIT BREAKER S201 B16 | 1 |
| 6 | 4194956 | PATCH CABLE RJ45 CAT6 1,0M BLUE SC-PANEL | 1 |

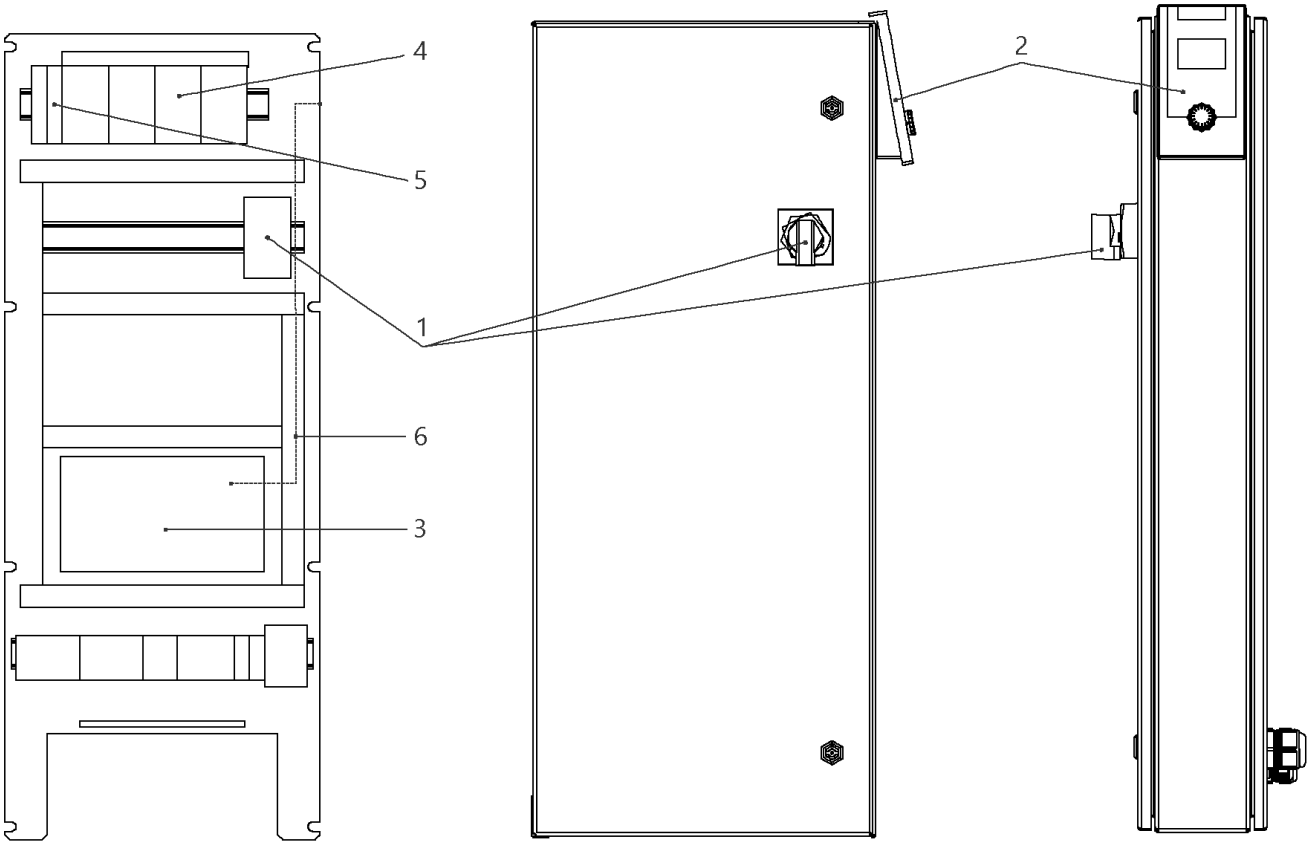
4
5
1
6
3
2

## W-CTRL-SCE-B-2x2,2-3,0KW-T4-FM-ND1

| Item | Article no. | Description | Quantity |
|---|---|---|---|
| 1 | 2104470 | MAIN SWITCH OT40F3 L250 KIT | 1 |
| 2 | 4184784 | CONTROL PANEL HMI SC KIT | 1 |
| 2 | 4185259 | ASSEMBLY DISPLAY SC PKG VP. | 1 |
| 3 | 4185257 | ASSEMBLY CPU SCe Booster VP. | 1 |
| 4 | 2051217 | AUTOM.CIRCUIT BREAKER S203 B16 TO7,5kW | 1 |
| 5 | 2046288 | CIRCUIT BREAKER S201 B16 | 1 |
| 6 | 4197081 | CABLE RJ45 CAT6 0,5M RED SC-PANEL VP. | 1 |

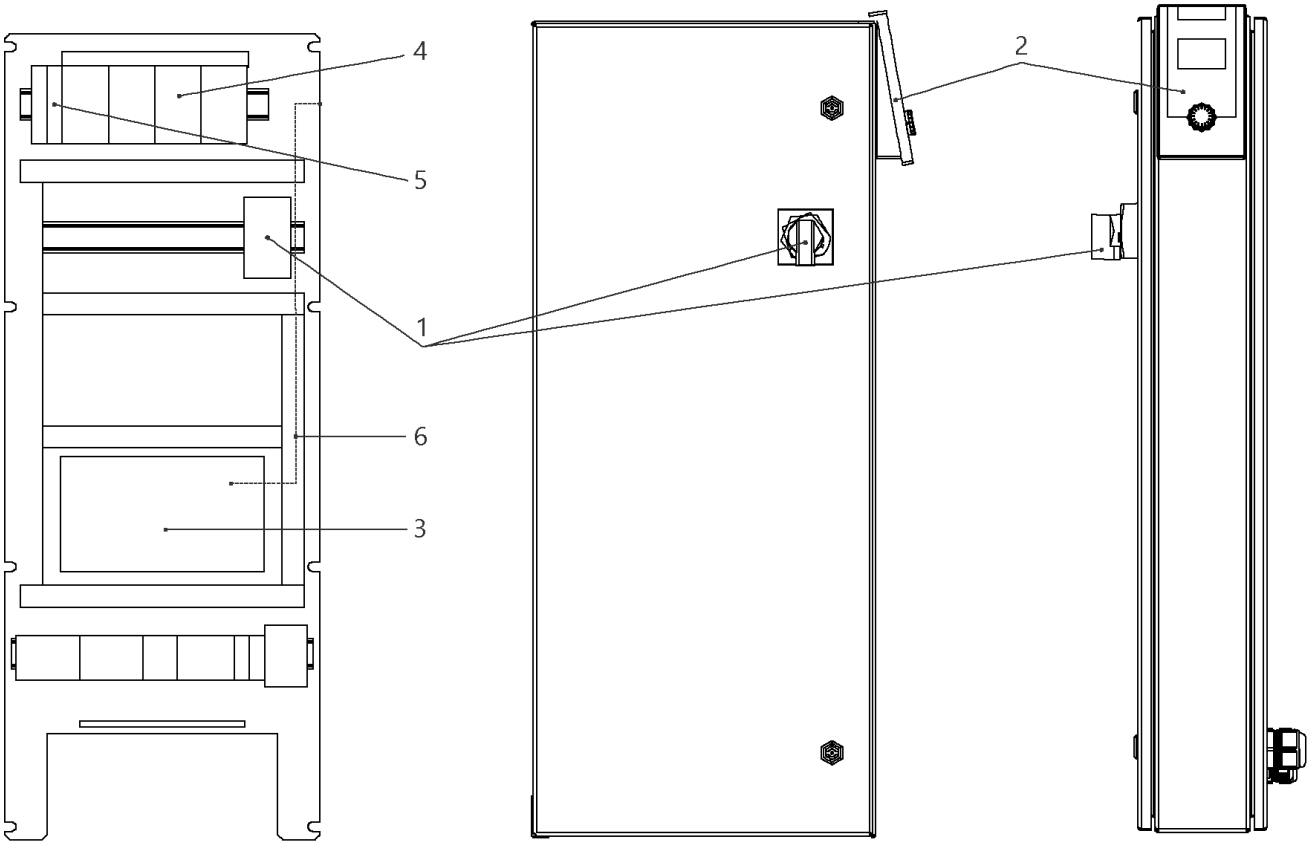
4
5
1
6
3
2

## W-CTRL-SCE-B-2x10A-T34-FM-ND1-AVC-PKG (2541913)

| Item | Article no. | Description | Quantity |
|---|---|---|---|
| 1 | 2104470 | MAIN SWITCH OT40F3 L250 KIT | 1 |
| 2 | 4184784 | CONTROL PANEL HMI SC KIT | 1 |
| 2 | 4185259 | ASSEMBLY DISPLAY SC PKG VP. | 1 |
| Note: DISPLAY ALONE / PLATINE SEULE | | | |
| 3 | 4185257 | ASSEMBLY CPU SCe Booster VP. | 1 |
| 4 | 2119861 | AUTOMATIC CIRCUIT BREAKER S203 B13 3POL. | 1 |
| 5 | 2046288 | CIRCUIT BREAKER S201 B16 | 1 |
| 6 | 4197081 | CABLE RJ45 CAT6 0,5M RED SC-PANEL VP. | 1 |

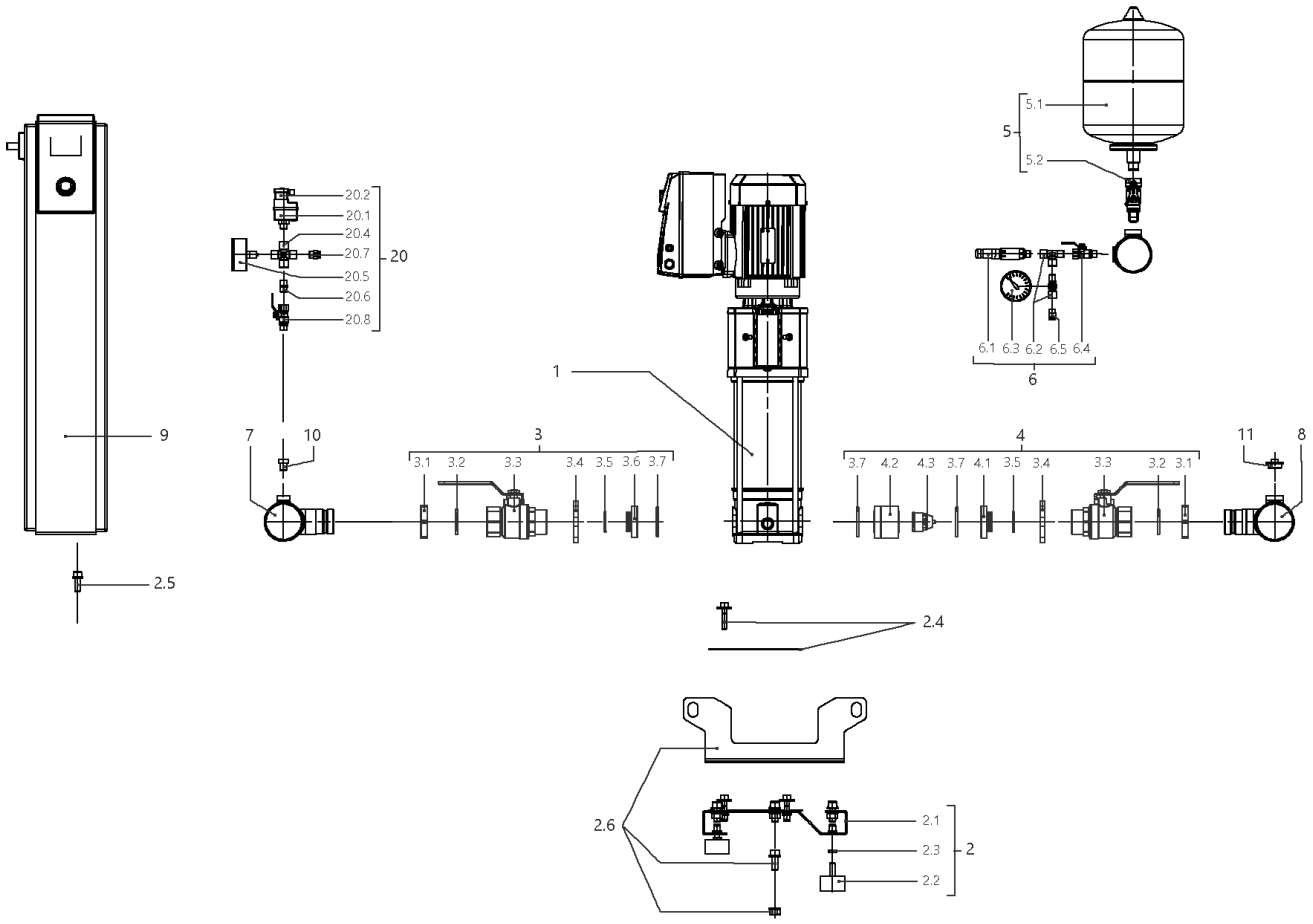
5.1
5
5.2
20.2
20.1
20.4
20.7
20
20.5
20.6
20.8
6.1 6.3 6.2 6.5 6.4
6
1
9
7
10
3
3.1 3.2 3.3 3.4 3.5 3.6 3.7
4
3.7 4.2 4.3 3.7 4.1 3.5 3.4 3.3 3.2 3.1
11
8
2.5
2.4
2.6
2.1
2.3
2
2.2

## SiBoost Smart 2HELIX VE608 (2537334)

| Item | Article no. | Description | Quantity |
|---|---|---|---|
| 1 | | HELIX VE608-1/16/E/S | 1 |
| Note: TO / BIS / JUSQU'AU 30/04/2016 | | | |
| 1 | 4201585 | HELIX VE608-1/16/E/S | 1 |
| Note: FROM / AB / À PARTIR DU 01/05/2016 | | | |
| 2 | 4200135 | BASE PLATE DE2 850x420 KIT | 1 |
| 2.1 | | > BASEPLATE_2x4/6/10/16V_E300_BOX_150 | 1 |
| 2.2 | 2028654 | > VIBRATION DAMPER D.50X30 M10X28 | 1 |
| 2.3 | 2028281 | > NUT M10 DIN936 (ISO4035) 17H VZ | 1 |
| 2.4 | 4199875 | > HOLDER PUMP Siboost Helix V2/4 KIT | 1 |
| 2.5 | 4197084 | > HOLDER SWITCHBOX WILO Smart Control KIT | 1 |
| 2.6 | 4197117 | > LIFTING Siboost HELIX SC KIT | 1 |
| 3 | 4199876 | SUCTION SIDE Siboost Helix V2/4/6 KIT | 1 |
| 3.1 | 2032610 | > NUT G11/4 MS VP. | 1 |
| 3.2 | 2032611 | > O-RING ID.36,09X3,53N DIN3771 E7502 | 1 |
| 3.3 | 2507646 | > BALL VALVE G11/4"M-F-W.HANDLE 1/4-TURN | 1 |
| 3.4 | 2032613 | > SCREWED FLANGE G1 1/4" LK-75 ST37VZ | 1 |
| 3.5 | 2032614 | > O-RING ID.29,82X2,62N DIN3771 E7502 | 1 |
| 3.6 | 2032615 | > SPACER F.I/A KUH.DN32 CUZN | 1 |
| 3.7 | 2032616 | > O-RING ID.44X3,53N DIN3771 E7502 | 1 |
| 4 | 4199877 | DELIVERY SIDE Siboost Helix V2/4/6 KIT | 1 |
| 3.1 | 2032610 | > NUT G11/4 MS VP. | 1 |
| 3.2 | 2032611 | > O-RING ID.36,09X3,53N DIN3771 E7502 | 1 |
| 3.3 | 2507646 | > BALL VALVE G11/4"M-F-W.HANDLE 1/4-TURN | 1 |
| 3.4 | 2032613 | > SCREWED FLANGE G1 1/4" LK-75 ST37VZ | 1 |
| 3.5 | 2032614 | > O-RING ID.29,82X2,62N DIN3771 E7502 | 1 |
| 4.1 | 2058116 | > SPACER F.I/A KUH.DN32 CUZN | 1 |
| 3.7 | 2032616 | > O-RING ID.44X3,53N DIN3771 E7502 | 1 |
| 4.2 | 2058115 | > HOUSING RFV(RV-IN) DN32 SGS/DRS | 1 |
| 4.3 | 2027870 | > NON-RETURN-DEVICE INSERT DN32(MTR) | 1 |
| 5 | 2032642 | DIAPHREM TANK 8L/PN16 DIN4807/T5 KIT | 1 |
| 5.1 | 2045914 | > DIAPHREM TANK 8L TYP-DD 16BAR | 1 |
| 5.2 | 2027853 | > FLOW FITTING G3/4 FOR DIAPHRAGM VES. | 1 |
| 6 | 4197076 | PRESSURE SENSOR/ GAUGE 0-16BAR KIT | 1 |
| 6.1 | 2085909 | > PRESS.SENSOR 1/4" 0-16BAR 4-20MA VP. | 1 |

| Item | Article no. | Description | Quantity |
|---|---|---|---|
| 6.2 | 4197077 | > T-PIECE 1/4" VP. | 1 |
| 6.3 | 2028692 | > PRESSURE GAUGE NG63-PN16-G1/4 | 1 |
| 6.4 | 2028291 | > BALL TAP R1/4" PN42 GIACOMINI R254DL | 1 |
| 6.5 | 2028691 | > BLOWGUN 1/4" MS 30BAR VP. | 1 |
| 7 | 4200092 | PIPE DE2 2''-2x1"1/4+1x1/4x600 VP. | 1 |
| 8 | 4200093 | PIPE DE2 2''-2x11/4"+1x1/4+1x3/4x600 VP. | 1 |
| 9 | | W-CTRL-SCE-B-2x4,0KW-T4-FM-ND2 | 1 |
| Note: TO / BIS / JUSQU'AU 18/05/2014 | | | |
| 9 | 2541905 | W-CTRL-SCE-B-2x13A-T34-FM-ND2-AVC-PKG | 1 |
| Note: FROM / AB / À PARTIR DU 19/05/2014 | | | |
| 10 | 4197079 | PLUG G1/4"x10 AISI304 KIT | 1 |
| 11 | 2032654 | PLUG R3/4" MS VIEGA 1751 | 1 |
| 20 | 2521150 | ASSEMBLY WMS. DE-EB. +VP | 1 |
| 20.1 | 2028652 | > PRESSURE SWITCH PS3-ASR 1/(1,3) VP. | 1 |
| 20.2 | 2130983 | > PLUG PS3-415 WITH KABEL 1,5M 2NO VP. | 1 |
| 20.4 | 2028290 | > CROSSPIECE R1/4" MS-NICKEL | 1 |
| 20.5 | 2028687 | > PRESSURE GAUGE NG63 R1/4" HI.0-6BAR | 1 |
| 20.6 | 2054268 | > DUAL NIPPLE G1/4" x G1/4" MS VP. | 1 |
| 20.7 | 2028691 | > BLOWGUN 1/4" MS 30BAR VP. | 1 |
| 20.8 | 2028291 | > BALL TAP R1/4" PN42 GIACOMINI R254DL | 1 |

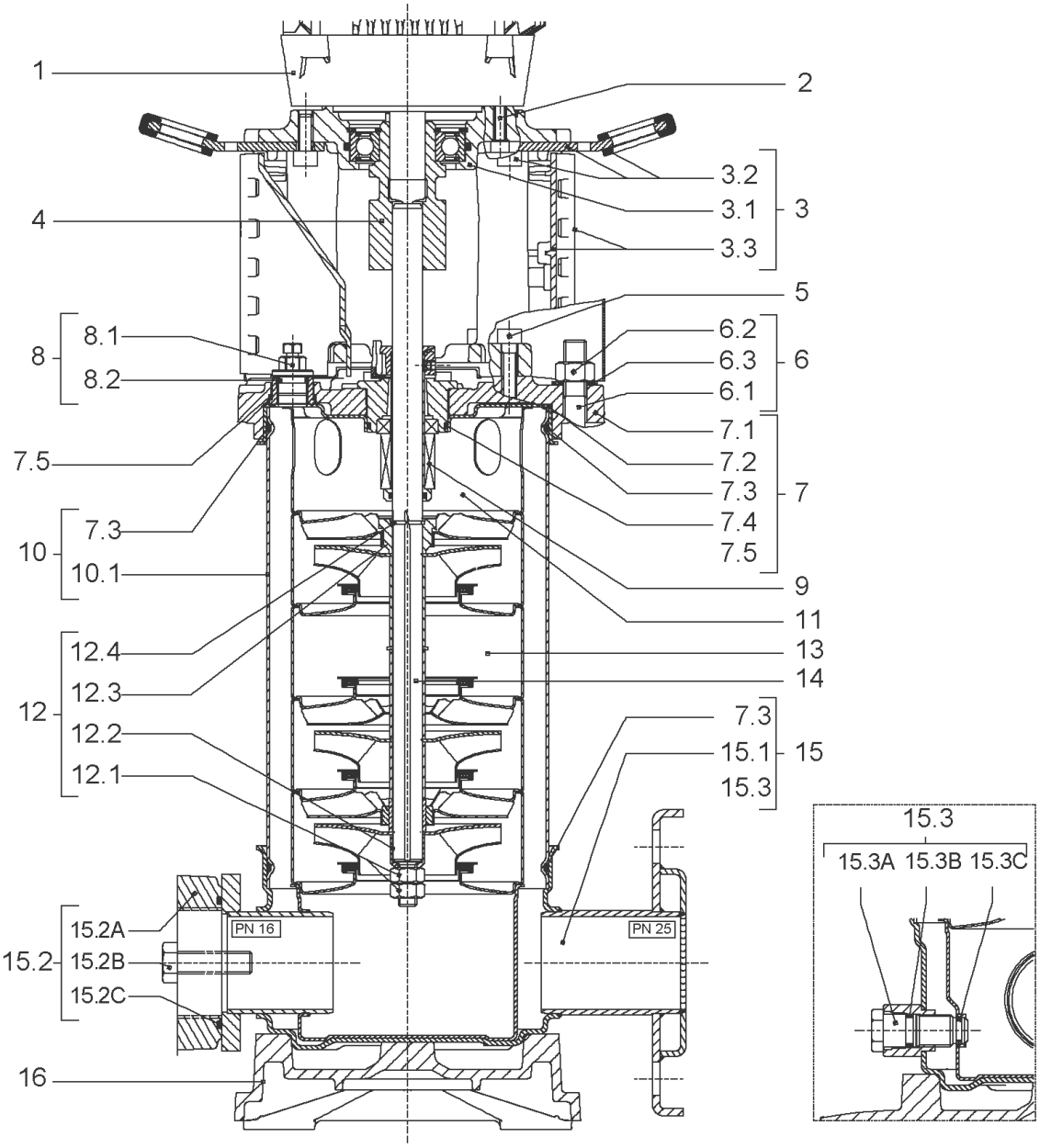
1
2
3.2
3.1
3
3.3
4
5
8.1
8
8.2
6.2
6.3
6
6.1
7.1
7.5
7.2
7.3
7
7.4
7.3
10
7.5
10.1
9
11
12.4
13
12.3
14
12
12.2
7.3
15.1
15
12.1
15.3
15.3
15.3A 15.3B 15.3C
15.2A
PN 16
PN 25
15.2
15.2B
15.2C
16

| Item | Article no. | Description | Quantity |
|---|---|---|---|
| 1 | | DRIVE HELIX-VE608IE2-WE KIT | 1 |
| Note: MOTOR BRAND WILO ELEC | | | |
| 1 | | DRIVE HELIX-VE608-IE4-WE KIT | 1 |
| Note: MOTOR BRAND WILO ELEC | | | |
| 2 | 4206025 | SCREW M8X45 (4 PIECES) | 1 |
| 3 | 4172789 | LANTERN FT130 HELIX V10 KIT | 1 |
| 3.1 | | > M+5_6_LANTERN_ONE-PIECE_FT130_CATA | 1 |
| 3.2 | 2127604 | > EYELET CPL.FT HELIX(2 PIECES) | 1 |
| 3.3 | 4159692 | > COUPLING PROTECTOR FT HELIX KIT | 1 |
| 4 | 4159710 | COUPLING D.16XD.28 FT130 HELIX KIT | 1 |
| 5 | 4159707 | SCREW M8X30 (4 PIECES) | 1 |
| 6 | 2127555 | STUD BOLT M12X485 KIT | 1 |
| 7 | 4210143 | STATIONARY RING HOLDER HELIX 6" EPDM | 1 |
| 7.2 | 2127607 | > STATIONARY RING HOLDER 6" HELIX 1.4301 V | 1 |
| 7.3 | 4176513 | > O-RING FOR PUMP JACKET VP. | 1 |
| 7.4 | 2127603 | > O-RING ID.37,6x2,4 EPDM VP. | 1 |
| 7.5 | 2127602 | > O-RING ID.21,35x2 EPDM VP. | 1 |
| 8 | 4159686 | FILING/PURGING PLUG HELIX EPDM KIT | 1 |
| 9 | 4171327 | SEAL-KIT-HELIX6-10-16 O/E KIT | 1 |
| 10 | 2127578 | HOUSING PIPE D.152x360 1.4307 KIT | 1 |
| 7.3 | 4176513 | > O-RING FOR PUMP JACKET VP. | 1 |
| 10.1 | | > HOUSING-PIPE Ø152-M+1008/1606-304 | 1 |
| 11 | 4174087 | CENTERING STAGE-RETURN HELIX6 1.4301VP. | 1 |
| 12 | 4174086 | SHAFTS EQUIPMENT HELIX V6 MONOBLOC KIT | 1 |
| 12.1 | | > NUT-H-M10-A4.70 | 1 |
| 12.2 | | > SERRATED LOCK WASHER M+6M3-316L | 1 |
| 12.3 | | > IMPELLER STOP RING L33,2-304 | 1 |
| 12.4 | | > STOP-RUSH-1/2-D16xd2-M+316 | 1 |
| 13 | | HYDRAULIC HELIX V 608 1.4307 | 1 |
| 14 | 4177829 | SHAFT Ø16 X480 1.4301 VP. | 1 |
| 15 | 4217897 | PUMP HOUSING HELIX DN32 PN16 1.4301 KIT | 1 |
| 7.3 | 4176513 | > O-RING FOR PUMP JACKET VP. | 1 |
| 15.1 | | > BLASTING PPE HOUSING V-PN16-DN32-5"-304 | 1 |
| 15.2 | 4217891 | > COUNTER FLANGE-G1"1/4-PN16-GJL KIT | 1 |

| Item | Article no. | Description | Quantity |
|---|---|---|---|
| 15.3 | 4171321 | > PRIMING/DRAIN PLUG EPDM HELIX KIT | 1 |
| 16 | 4177964 | BASEPLATE HELIX V2/4/6 PN16 VP. | 1 |

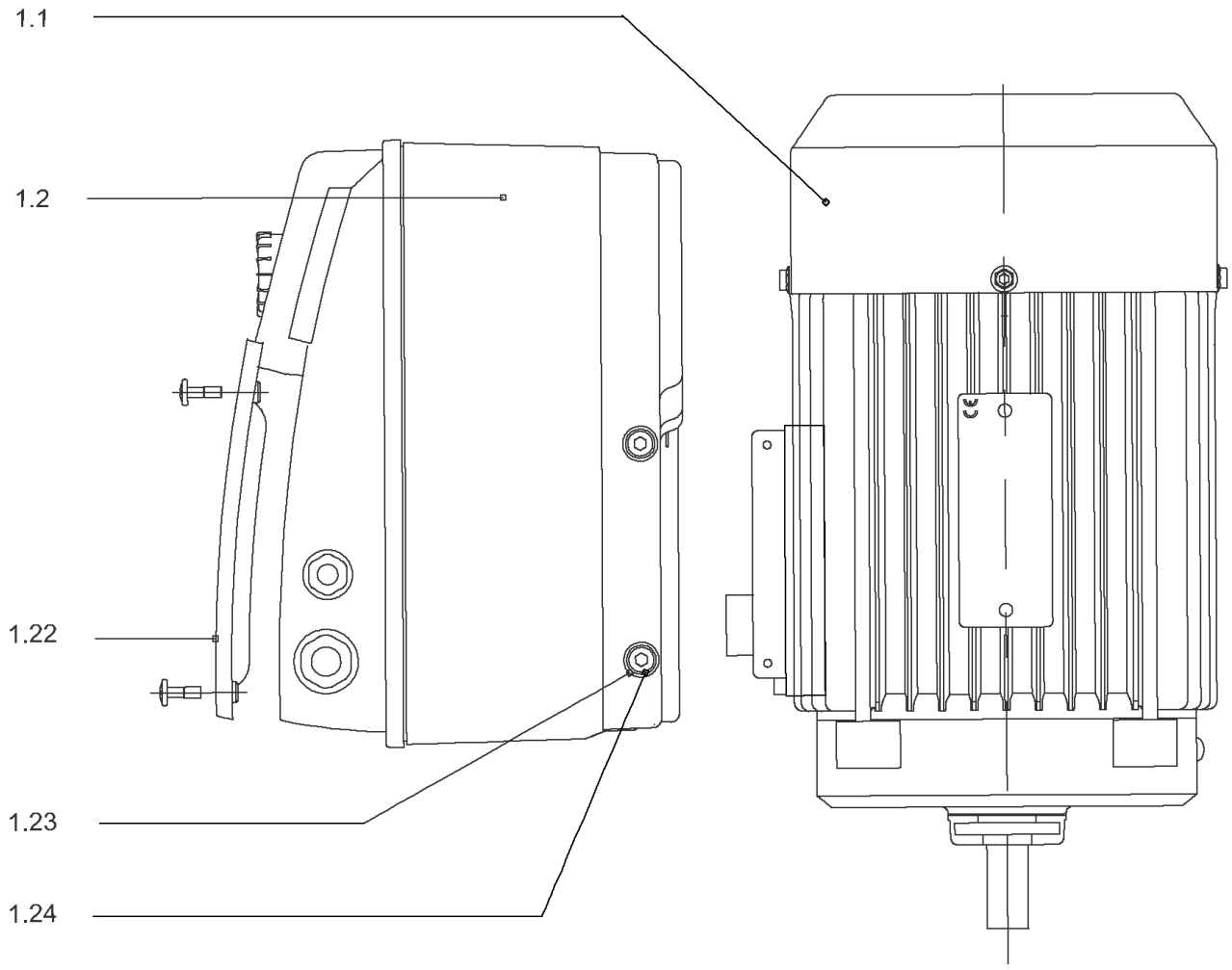
1.1
1.2
1.22
1.23
1.24

## DRIVE HELIX-VE608IE2-WE KIT

| Item | Article no. | Description | Quantity |
|---|---|---|---|
| 1.1 | | M3-T638P55V18H-100F13-SU-N28-WE-IE2 VP. | 1 |
| Note: no longer available/nicht mehrlieferbar/n'est plus disponible | | | |
| | | SPARE PARTS MOTOR:ON REQUEST | 1 |
| 1.2 | 4186331 | MODULE HELIX-VE608-IE2-WE KIT | 1 |
| 1.22 | 2054227 | > MODULE COVER/GASKET TL3/4 KIT | 1 |
| 1.23 | 4215716 | > SCREW M5X16 DIN912 8.8 A2A (4pieces) VP. | 1 |
| 1.24 | 2057978 | > RONDELLE A5,3 DIN6797 FST ZN (4 PIECES) | 1 |

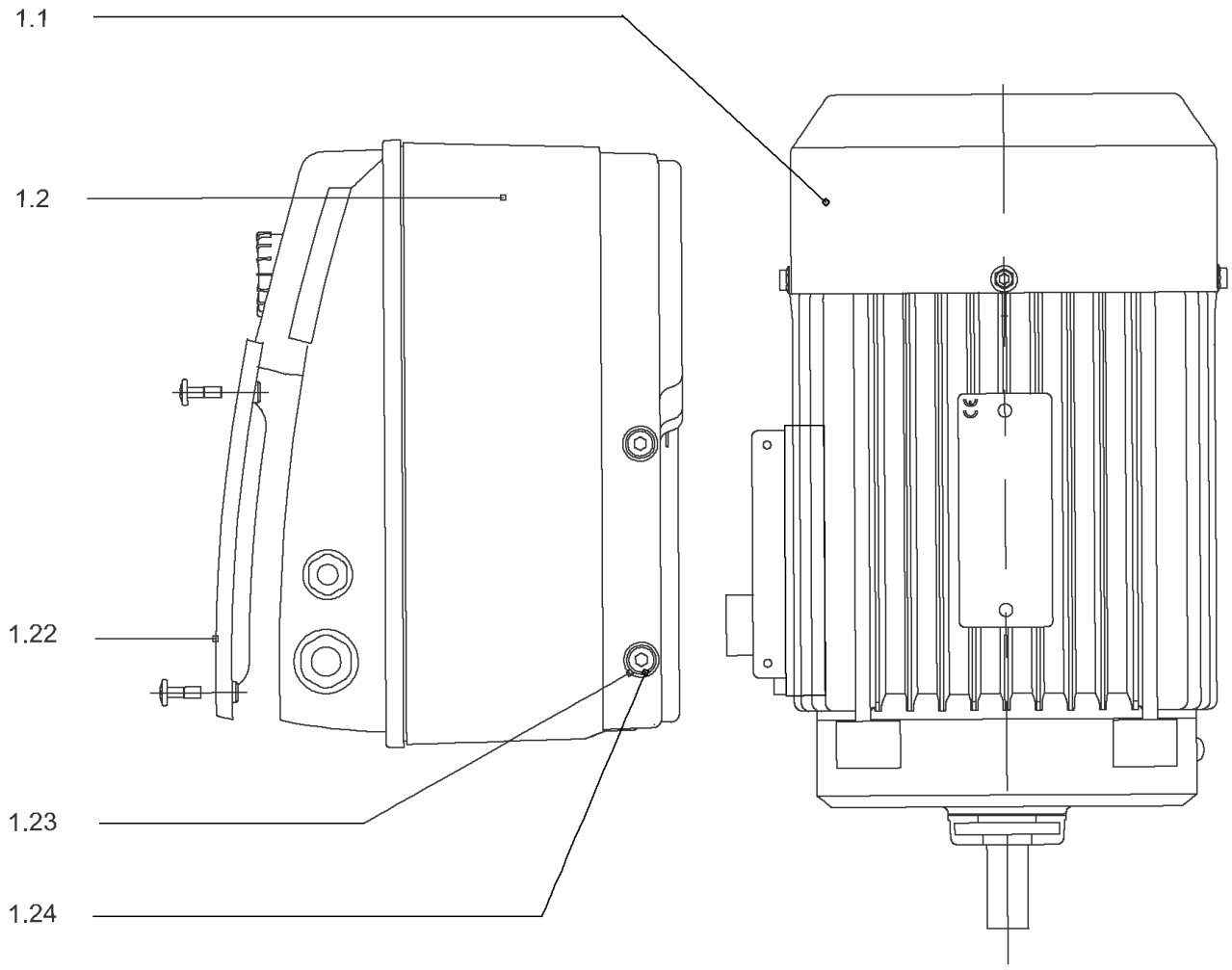
1.1
1.2
1.22
1.23
1.24

## DRIVE HELIX-VE608-IE4-WE KIT

| Item | Article no. | Description | Quantity |
|---|---|---|---|
| 1.1 | 4207922 | MOTOR 3/2/100 3~ 380V 60HZ IE4 WE VP. | 1 |
| | | SPARE PARTS MOTOR:ON REQUEST | 1 |
| 1.2 | 4209338 | MODULE HELIX-VE608-IE4-WE KIT | 1 |
| 1.22 | 2054227 | > MODULE COVER/GASKET TL3/4 KIT | 1 |
| 1.23 | 4215716 | > SCREW M5X16 DIN912 8.8 A2A (4pieces) VP. | 1 |
| 1.24 | 2057978 | > RONDELLE A5,3 DIN6797 FST ZN (4 PIECES) | 1 |

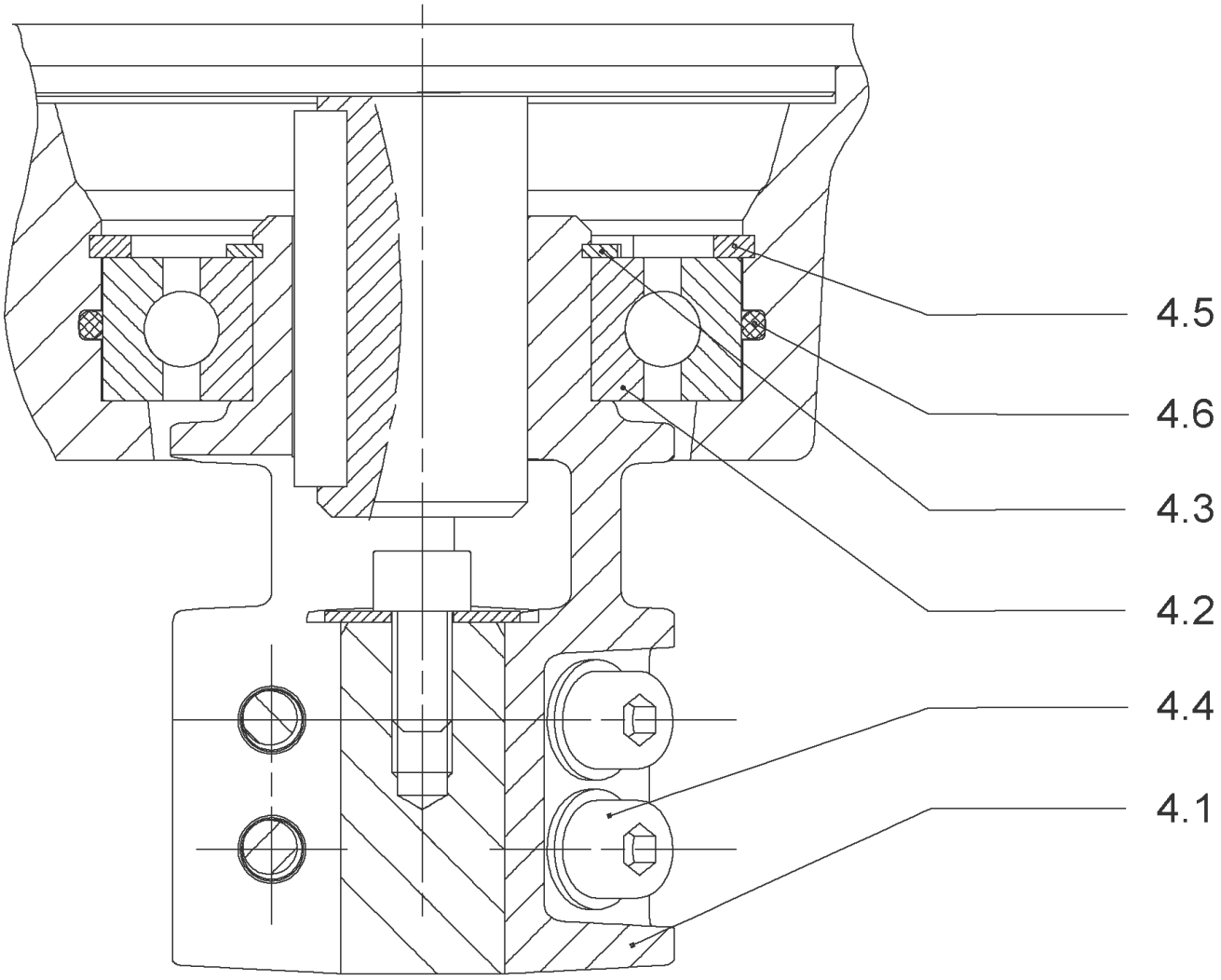
4.5
4.6
4.3
4.2
4.4
4.1

## COUPLING D.16XD.28 FT130 HELIX KIT (4159710)

| Item | Article no. | Description | Quantity |
|---|---|---|---|
| 4.1 | | COUPLING M+ Ø16XØ28 FT130 MACHINED | 1 |
| 4.2 | 2131022 | BALL BEARING 6209/ZZ-C3(HT)VP. | 1 |
| 4.3 | 4233930 | CIRCLIP-FOR-BORES-D45x1,75 VP. | 1 |
| 4.4 | 4157726 | SCREW KIT M8X30 (4 PIECES) | 1 |
| 4.5 | 4234252 | CIRCLIPS 85X3 VP. | 1 |
| 4.6 | 4234243 | O-RING 85X3 VP. | 1 |
| | | NOMEL CONTACT WASHER 8x16x1,4 STEEL ZC | 1 |

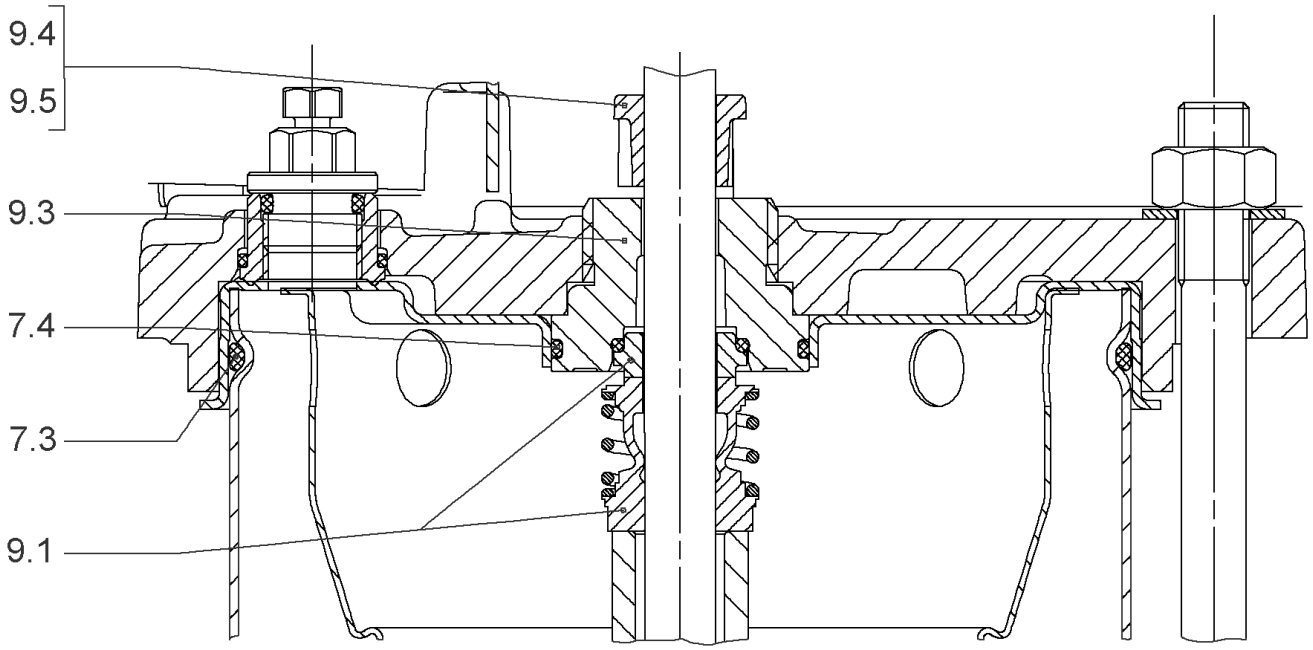
9.4
9.5
9.3
7.4
7.3
9.1

## SEAL-KIT-HELIX6-10-16 O/E KIT (4171327)

| Item | Article no. | Description | Quantity |
|---|---|---|---|
| 7.3 | 4176513 | O-RING FOR PUMP JACKET VP. | 1 |
| 7.4 | 2127603 | O-RING ID.37,6x2,4 EPDM VP. | 1 |
| 9.1 | 4177801 | MECH.SEAL HELIX6-10-16 O/E VP. | 1 |
| 9.3 | 4177798 | MACHINED RING HOLDER M+6" Ø16 304 VP. | 1 |
| 9.5 | 4177799 | MACHINED DRIVE RING Ø16 VP. | 1 |
| 9.4 | 4176520 | SCREW CH M5x5 A4-70 ( 3PIECES ) | 1 |

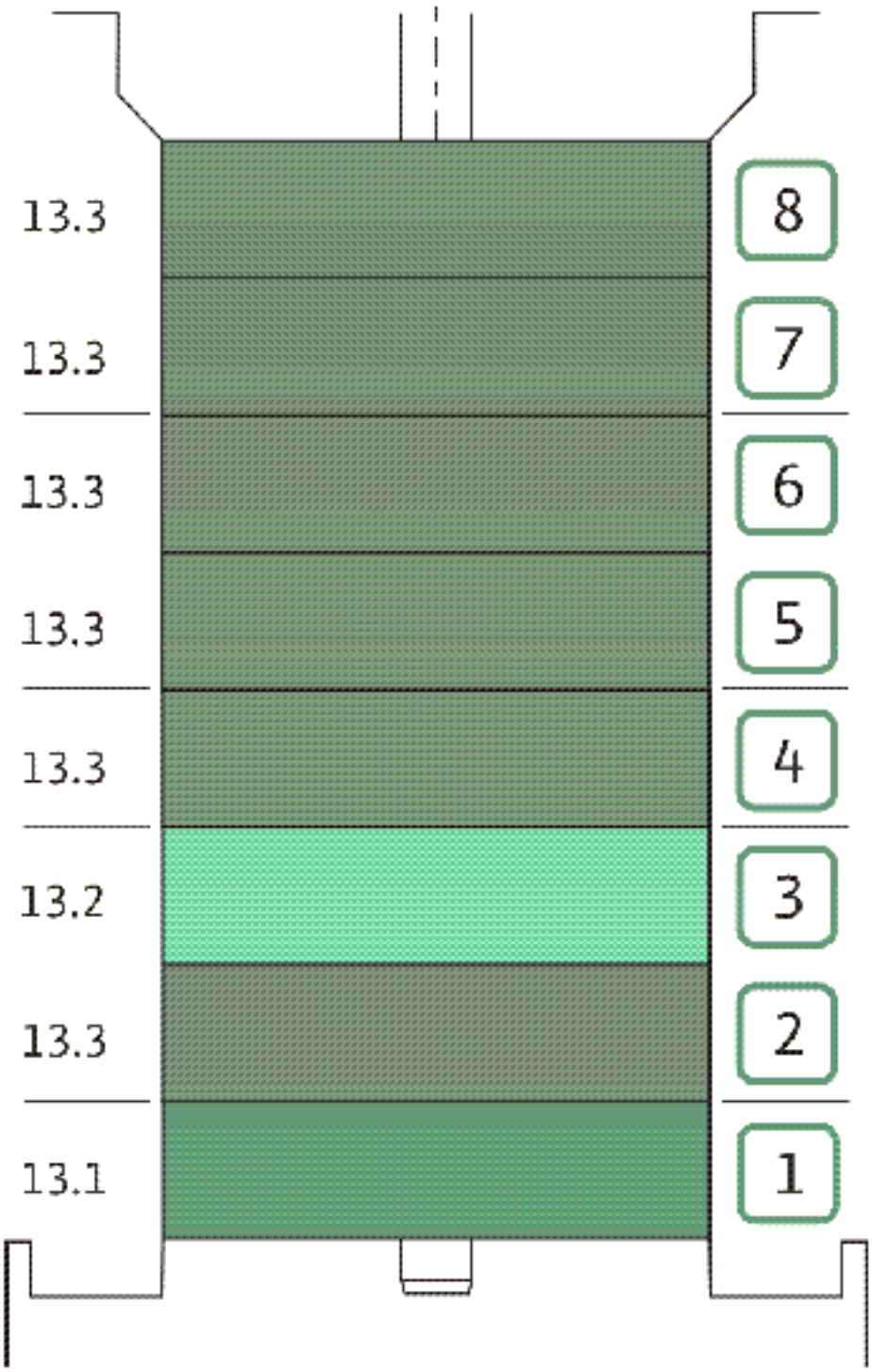
13.3
13.3
13.3
13.3
13.3
13.2
13.3
13.1
8
7
6
5
4
3
2
1

| Item | Article no. | Description | Quantity |
|---|---|---|---|
| 13.1 | 4174084 | STAGE HELIX 6 1.4301 KIT | 1 |
| | | > MACH.STG-CASING-WOGV-WNR-M+6-304 | 1 |
| | | > IMPELLER-M+6-304 | 1 |
| 13.2 | 4174089 | INTERMEDIATE STAGE HELIX 6 1.4301 KIT | 1 |
| | | > MACH.BEARING-STG-CASING-WNR-M+6-304 | 1 |
| | | > IMPELLER-M+6-304 | 1 |
| | | > SHAFT SLEEVE-SPACER-Ø19,35x18,465-304 | 1 |
| | | > SHAFT-SLEEVE-D16xD20x18-CW | 1 |
| 13.3 | 4174090 | INTERMEDIATE STAGE HELIX 6 1.4301 KIT | 1 |
| | | > MACH.STD-STG-CASING-WGV+NR-M+6-304 | 1 |
| | | > IMPELLER-M+6-304 | 1 |
| | | > IMPELLER SPACER Ø16,05X19,45-L36,465-304 | 1 |

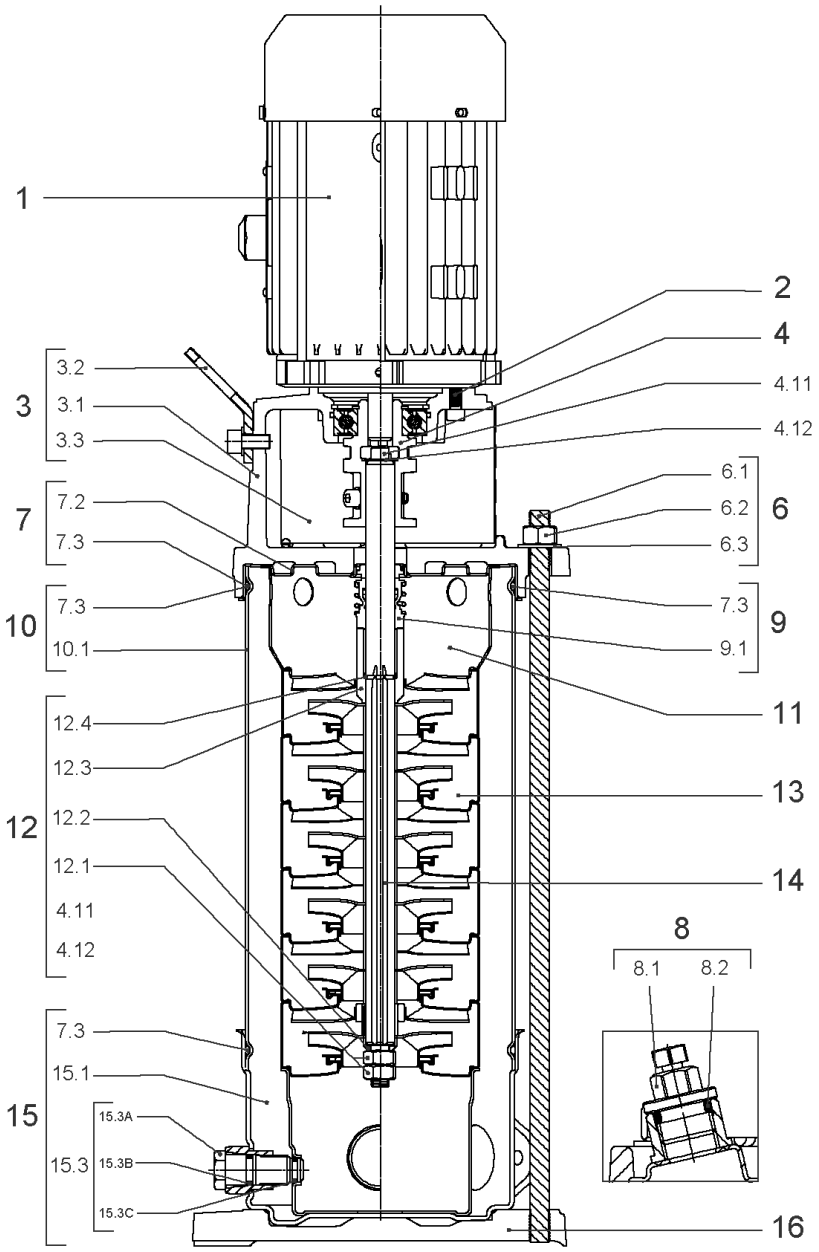
1
2
4
4.11
4.12
3
3.2
3.1
3.3
7
7.2
7.3
6
6.1
6.2
6.3
10
7.3
10.1
9
7.3
9.1
11
12
12.4
12.3
12.2
12.1
4.11
4.12
13
14
8
8.1
8.2
15
7.3
15.1
15.3
15.3A
15.3B
15.3C
16

## HELIX VE608-1/16/E/S (4201585)

| Item | Article no. | Description | Quantity |
|---|---|---|---|
| 1 | | DRIVE HELIX-VE608-IE4-WE KIT | 1 |
| Note: MOTOR BRAND WILO ELEC | | | |
| | | SPARE PARTS MOTOR:ON REQUEST | 1 |
| 2 | 4159707 | SCREW M8X30 (4 PIECES) | 1 |
| 3 | 4214473 | LANTERN FT130 HELIX KIT | 1 |
| 3.1 | | > LANT-MOT-VMI-ReDTC6"-FT130-MACHINED+CATA | 1 |
| 3.2 | 4184852 | > EYELET CPL.FT HELIX (2 PIECES) | 1 |
| 3.3 | 4213782 | > COUPLING PROTECTOR FT115/130 HELIX KIT | 1 |
| 4 | 4159710 | COUPLING D.16XD.28 FT130 HELIX KIT | 1 |
| 6 | 4177821 | STUD BOLT M12X485 KIT | 1 |
| 6.1 | | > TIE BOLT M12-485x18x30-1.4057 | 1 |
| 6.2 | 2094647 | > NUT M12 M12 ISO4032 VP. | 1 |
| 6.3 | 2123557 | > WASHER CS-12.4-24-1.6-NFE25 (4 PIECES) | 1 |
| 7 | 4214481 | STATIONARY RING HOLDER HELIX D27 ReDTC | 1 |
| 7.2 | 4214479 | > STATIONARY RING HOLDER HELIX D27 VP. | 1 |
| 7.3 | 4176513 | > O-RING FOR PUMP JACKET VP. | 1 |
| 8 | 4212724 | FILING/PURGING PLUG HELIX ReDTC KIT | 1 |
| 8.1 | | > FILLING PLUG MVI6"-304 | 1 |
| 8.2 | 4177800 | > O-RING EPDM PLUG HELIX VP. | 1 |
| 9 | 4214483 | MECH.SEAL HELIX6-10-16 O/E ReDTC KIT | 1 |
| 9.1 | 4177801 | > MECH.SEAL HELIX6-10-16 O/E VP. | 1 |
| 7.3 | 4176513 | > O-RING FOR PUMP JACKET VP. | 1 |
| 10 | 2127578 | HOUSING PIPE D.152x360 1.4307 KIT | 1 |
| 7.3 | 4176513 | > O-RING FOR PUMP JACKET VP. | 1 |
| 10.1 | | > HOUSING-PIPE Ø152-M+1008/1606-304 | 1 |
| 11 | 4174087 | CENTERING STAGE-RETURN HELIX6 1.4301VP. | 1 |
| 12 | 4214486 | SHAFT EQUIPMENT HELIX V6 ReDTC KIT | 1 |
| 12.1 | | > NUT-H-M10-A4.70 | 1 |
| 12.2 | | > SERRATED LOCK WASHER M+6M3-316L | 1 |
| 12.3 | | > 1/2-SNAP-RING-6/10M3-316L | 1 |
| 12.4 | | > STOP-RUSH-1/2-D16xd2-M+316 | 1 |
| 4.11 | | > SCREW CHC-M6X14-8.8-ISO4762-GEOMET500A | 1 |
| 4.12 | | > WASHER D.24 L6U ZINK | 1 |
| 13 | | HYDRAULIC HELIX V 608 1.4307 | 1 |

| Item | Article no. | Description | Quantity |
|---|---|---|---|
| 14 | 4214504 | SHAFT D.16X428 HELIX 1.4057 VP. | 1 |
| 15 | 4217897 | PUMP HOUSING HELIX DN32 PN16 1.4301 KIT | 1 |
| 7.3 | 4176513 | > O-RING FOR PUMP JACKET VP. | 1 |
| 15.1 | | > BLASTING PPE HOUSING V-PN16-DN32-5"-304 | 1 |
| 15.2 | 4217891 | > COUNTER FLANGE-G1"1/4-PN16-GJL KIT | 1 |
| 15.3 | 4171321 | > PRIMING/DRAIN PLUG EPDM HELIX KIT | 1 |
| 16 | 4177964 | BASEPLATE HELIX V2/4/6 PN16 VP. | 1 |

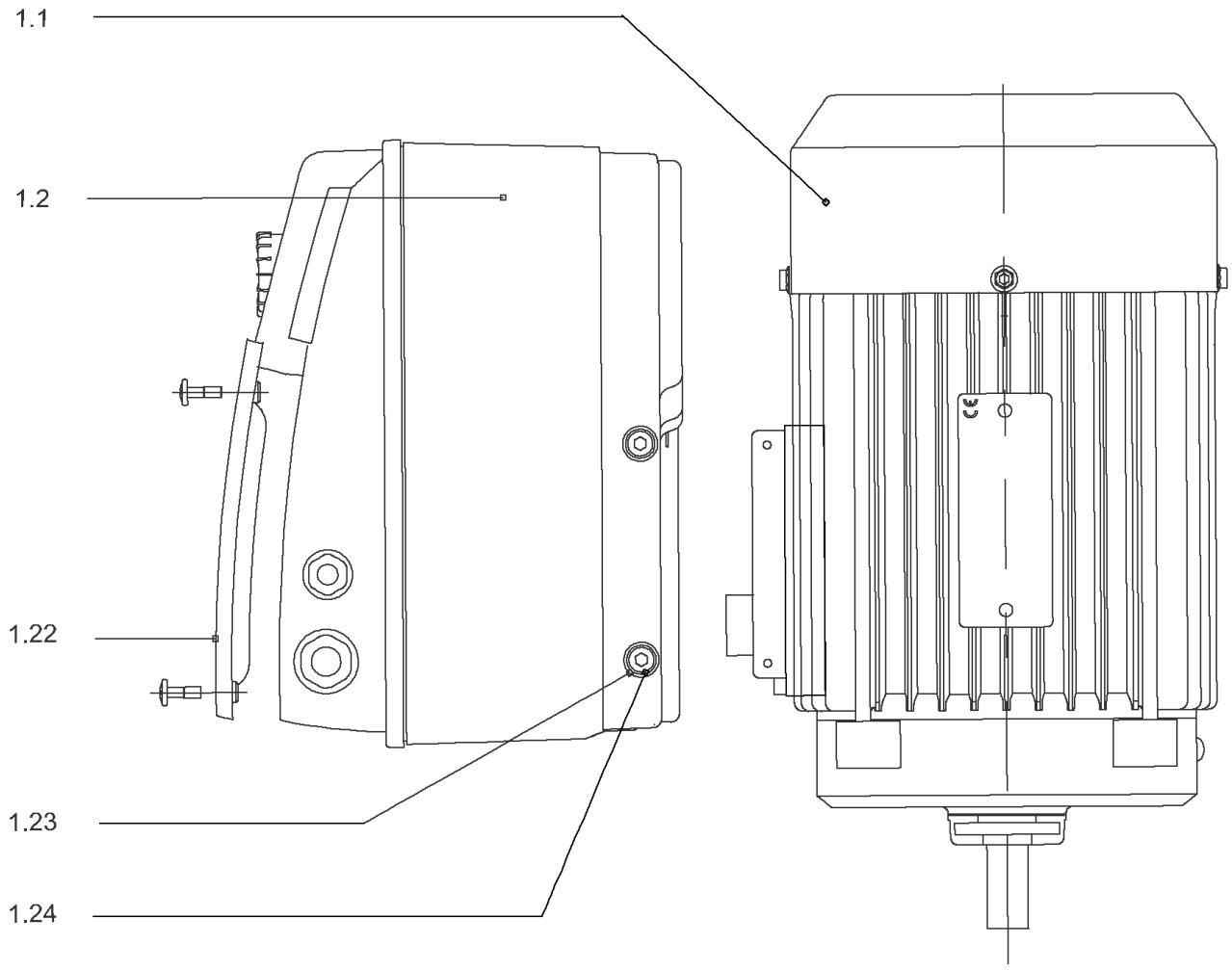
1.1
1.2
1.22
1.23
1.24

## DRIVE HELIX-VE608-IE4-WE KIT

| Item | Article no. | Description | Quantity |
|---|---|---|---|
| 1.1 | 4207922 | MOTOR 3/2/100 3~ 380V 60HZ IE4 WE VP. | 1 |
| | | SPARE PARTS MOTOR:ON REQUEST | 1 |
| 1.2 | 4209338 | MODULE HELIX-VE608-IE4-WE KIT | 1 |
| 1.22 | 2054227 | > MODULE COVER/GASKET TL3/4 KIT | 1 |
| 1.23 | 4215716 | > SCREW M5X16 DIN912 8.8 A2A (4pieces) VP. | 1 |
| 1.24 | 2057978 | > RONDELLE A5,3 DIN6797 FST ZN (4 PIECES) | 1 |

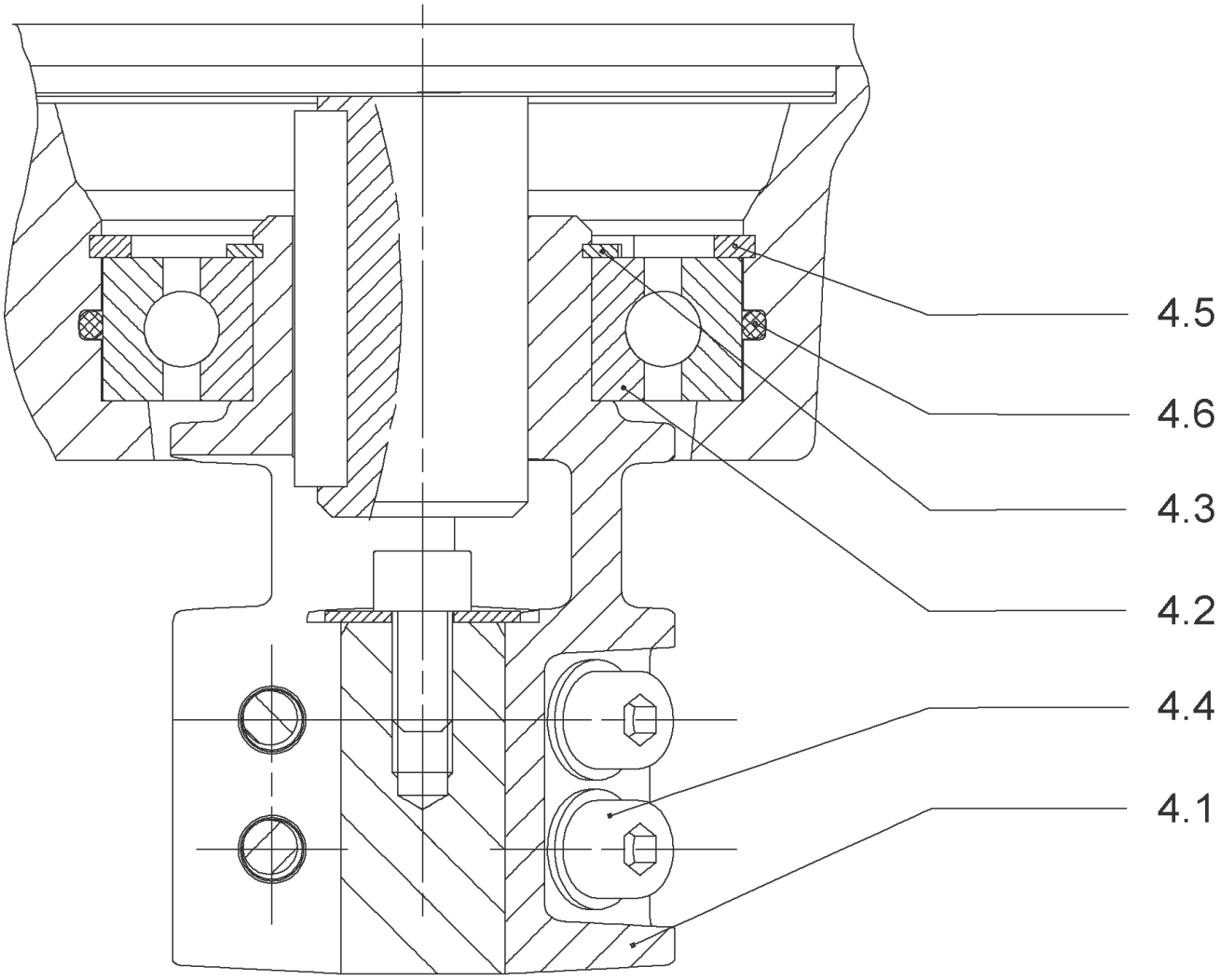
4.5
4.6
4.3
4.2
4.4
4.1

## COUPLING D.16XD.28 FT130 HELIX KIT (4159710)

| Item | Article no. | Description | Quantity |
|---|---|---|---|
| 4.1 | | COUPLING M+ Ø16XØ28 FT130 MACHINED | 1 |
| 4.2 | 2131022 | BALL BEARING 6209/ZZ-C3(HT)VP. | 1 |
| 4.3 | 4233930 | CIRCLIP-FOR-BORES-D45x1,75 VP. | 1 |
| 4.4 | 4157726 | SCREW KIT M8X30 (4 PIECES) | 1 |
| 4.5 | 4234252 | CIRCLIPS 85X3 VP. | 1 |
| 4.6 | 4234243 | O-RING 85X3 VP. | 1 |
| | | NOMEL CONTACT WASHER 8x16x1,4 STEEL ZC | 1 |

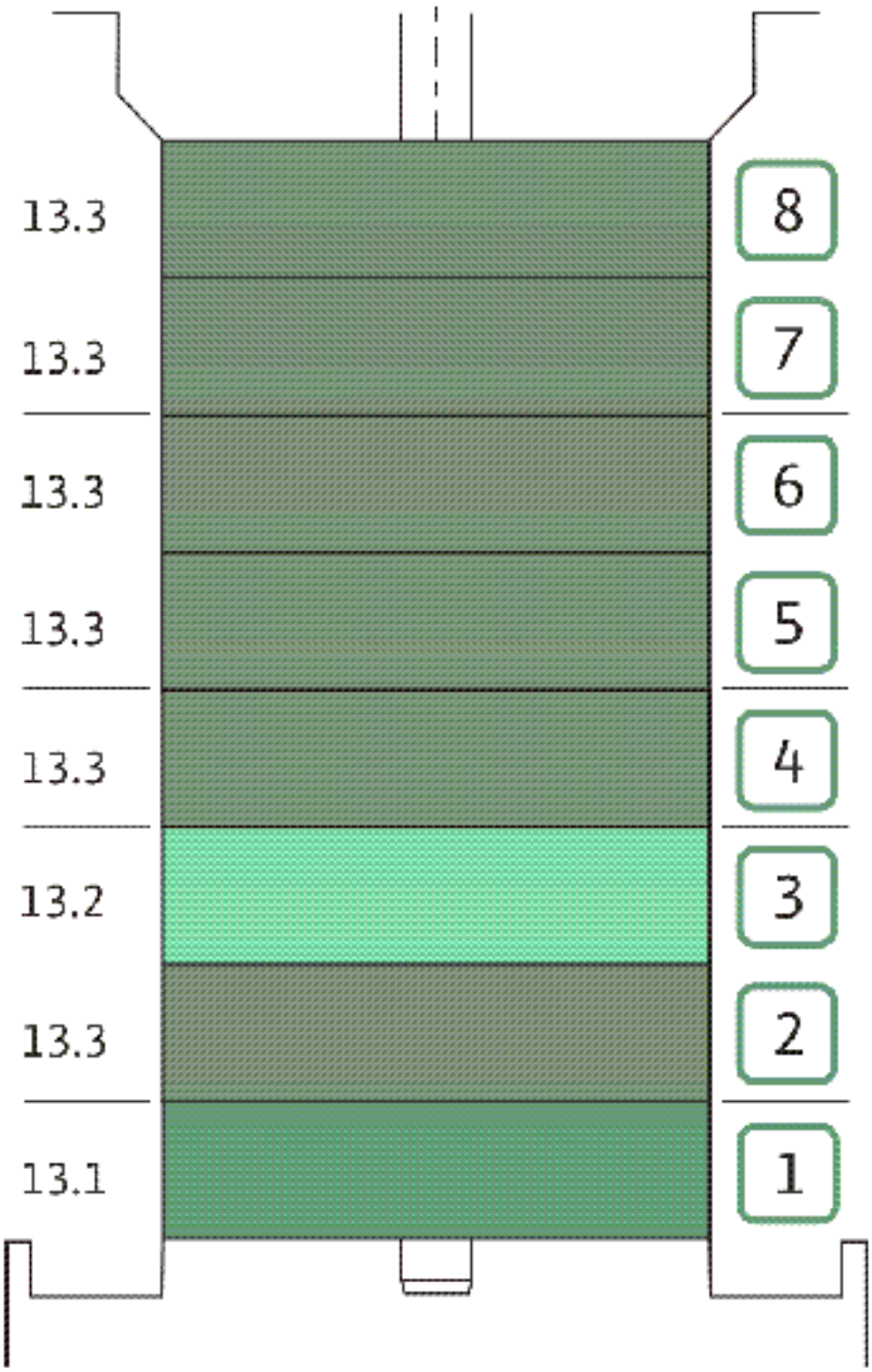
13.3
13.3
13.3
13.3
13.3
13.2
13.3
13.1
8
7
6
5
4
3
2
1

| Item | Article no. | Description | Quantity |
|---|---|---|---|
| 13.1 | 4174084 | STAGE HELIX 6 1.4301 KIT | 1 |
| | | > MACH.STG-CASING-WOGV-WNR-M+6-304 | 1 |
| | | > IMPELLER-M+6-304 | 1 |
| 13.2 | 4174089 | INTERMEDIATE STAGE HELIX 6 1.4301 KIT | 1 |
| | | > MACH.BEARING-STG-CASING-WNR-M+6-304 | 1 |
| | | > IMPELLER-M+6-304 | 1 |
| | | > SHAFT SLEEVE-SPACER-Ø19,35x18,465-304 | 1 |
| | | > SHAFT-SLEEVE-D16xD20x18-CW | 1 |
| 13.3 | 4174090 | INTERMEDIATE STAGE HELIX 6 1.4301 KIT | 1 |
| | | > MACH.STD-STG-CASING-WGV+NR-M+6-304 | 1 |
| | | > IMPELLER-M+6-304 | 1 |
| | | > IMPELLER SPACER Ø16,05X19,45-L36,465-304 | 1 |

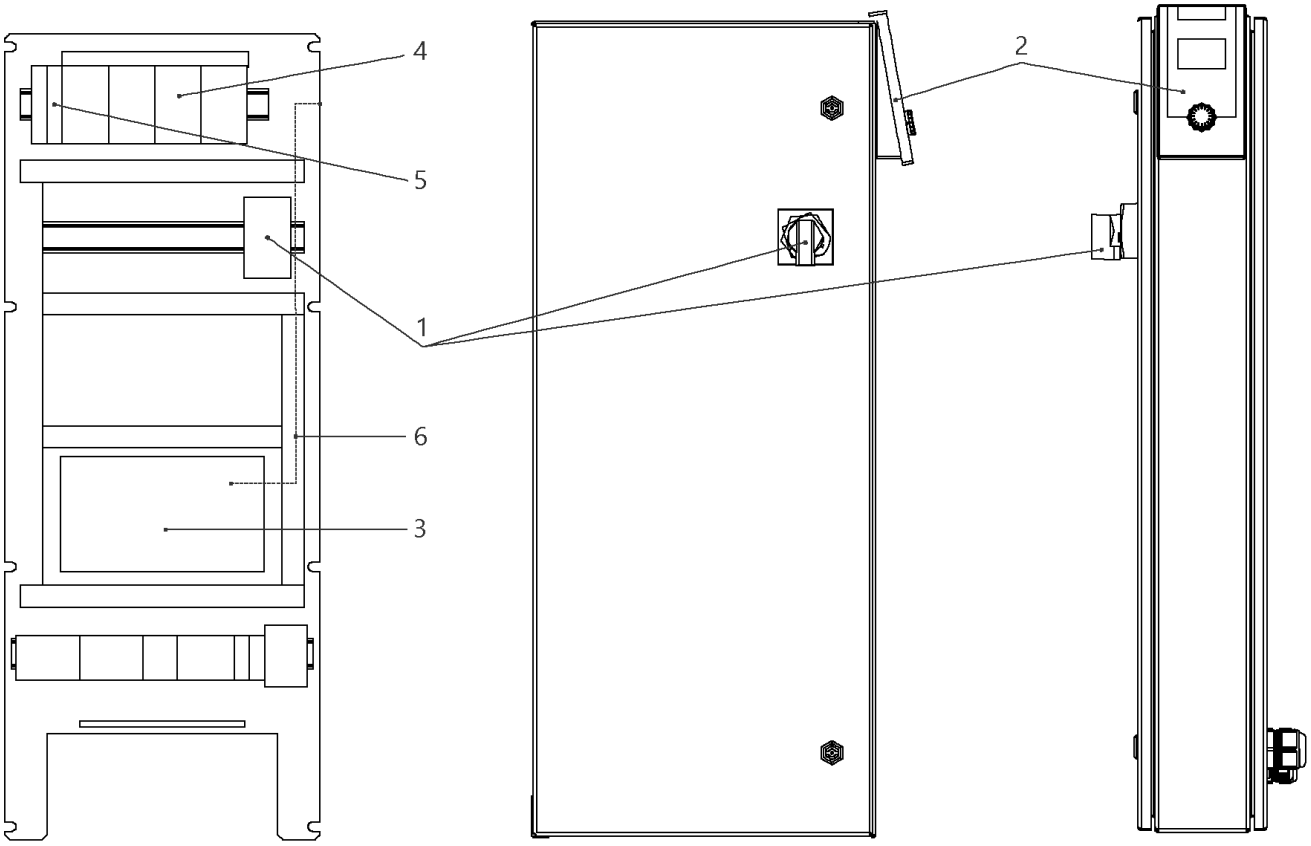
4
5
1
6
3
2

## W-CTRL-SCE-B-2x4,0KW-T4-FM-ND2

| Item | Article no. | Description | Quantity |
|---|---|---|---|
| 1 | 2104470 | MAIN SWITCH OT40F3 L250 KIT | 1 |
| 2 | 4184784 | CONTROL PANEL HMI SC KIT | 1 |
| 2 | 4185259 | ASSEMBLY DISPLAY SC PKG VP. | 1 |
| 3 | 4185257 | ASSEMBLY CPU SCe Booster VP. | 1 |
| 4 | 2051217 | AUTOM.CIRCUIT BREAKER S203 B16 TO7,5kW | 1 |
| 5 | 2046288 | CIRCUIT BREAKER S201 B16 | 1 |
| 6 | 4194956 | PATCH CABLE RJ45 CAT6 1,0M BLUE SC-PANEL | 1 |

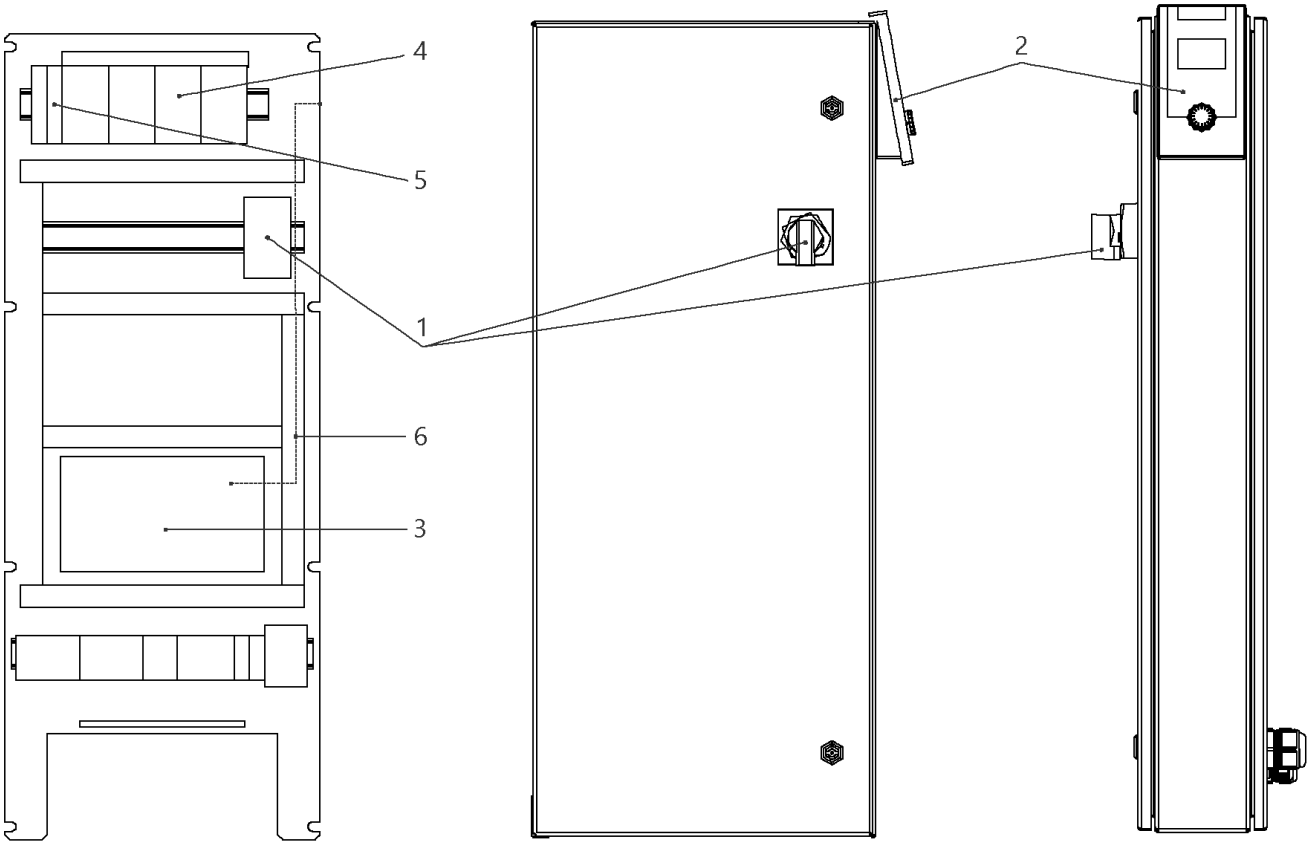
4
5
1
6
3
2

## W-CTRL-SCE-B-2x13A-T34-FM-ND2-AVC-PKG (2541905)

| Item | Article no. | Description | Quantity |
|---|---|---|---|
| 1 | 2104473 | MAIN SWITCH OT63F3 L105 KIT | 1 |
| Note: TO / BIS / JUSQU'AU 30/06/2015 | | | |
| 1 | 2104470 | MAIN SWITCH OT40F3 L250 KIT | 1 |
| Note: FROM / AB / À PARTIR DU 01/07/2015 | | | |
| 2 | 4184784 | CONTROL PANEL HMI SC KIT | 1 |
| 2 | 4185259 | ASSEMBLY DISPLAY SC PKG VP. | 1 |
| Note: DISPLAY ALONE / PLATINE SEULE | | | |
| 3 | 4185257 | ASSEMBLY CPU SCe Booster VP. | 1 |
| 4 | 2051217 | AUTOM.CIRCUIT BREAKER S203 B16 TO7,5kW | 1 |
| 5 | 2046288 | CIRCUIT BREAKER S201 B16 | 1 |
| 6 | 4194956 | PATCH CABLE RJ45 CAT6 1,0M BLUE SC-PANEL | 1 |

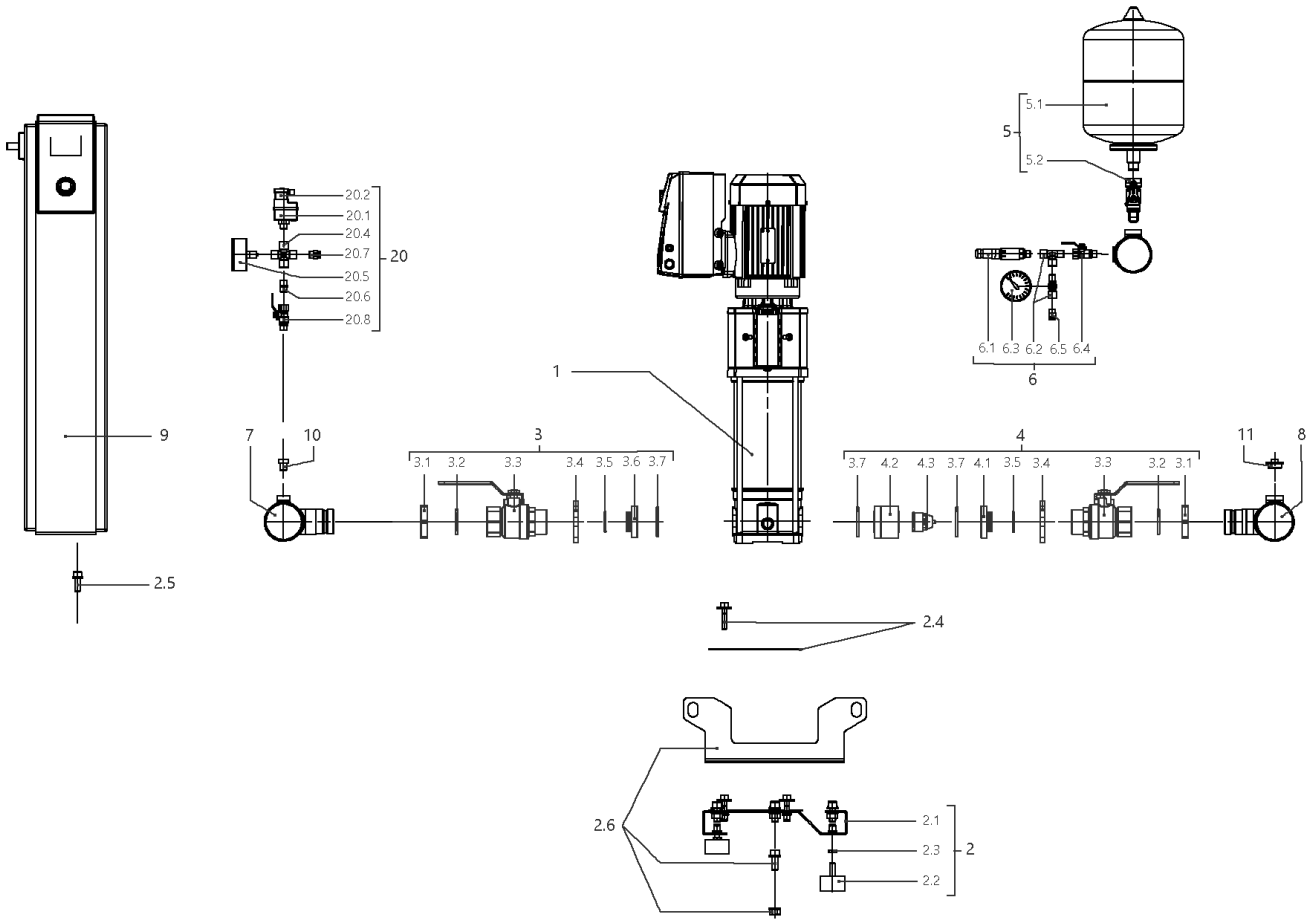
20.2
20.1
20.4
20.7
20.5
20.6
20.8
20
5.1
5
5.2
6.1 6.3 6.2 6.5 6.4
6
1
9
7
10
3
3.1 3.2 3.3 3.4 3.5 3.6 3.7
4
3.7 4.2 4.3 3.7 4.1 3.5 3.4 3.3 3.2 3.1
11
8
2.5
2.4
2.6
2.1
2.3
2.2
2

## SiBoost Smart 2HELIX VE611 (2536374)

| Item | Article no. | Description | Quantity |
|---|---|---|---|
| 1 | | HELIX VE611-1/16/E/S | 1 |
| Note: TO / BIS / JUSQU'AU 30/04/2016 | | | |
| 1 | 4201587 | HELIX VE611-1/16/E/S | 1 |
| Note: FROM / AB / À PARTIR DU 01/05/2016 | | | |
| 2 | 4200135 | BASE PLATE DE2 850x420 KIT | 1 |
| 2.1 | | > BASEPLATE_2x4/6/10/16V_E300_BOX_150 | 1 |
| 2.2 | 2028654 | > VIBRATION DAMPER D.50X30 M10X28 | 1 |
| 2.3 | 2028281 | > NUT M10 DIN936 (ISO4035) 17H VZ | 1 |
| 2.4 | 4199875 | > HOLDER PUMP Siboost Helix V2/4 KIT | 1 |
| 2.5 | 4197084 | > HOLDER SWITCHBOX WILO Smart Control KIT | 1 |
| 2.6 | 4197117 | > LIFTING Siboost HELIX SC KIT | 1 |
| 3 | 4199876 | SUCTION SIDE Siboost Helix V2/4/6 KIT | 1 |
| 3.1 | 2032610 | > NUT G11/4 MS VP. | 1 |
| 3.2 | 2032611 | > O-RING ID.36,09X3,53N DIN3771 E7502 | 1 |
| 3.3 | 2507646 | > BALL VALVE G11/4"M-F-W.HANDLE 1/4-TURN | 1 |
| 3.4 | 2032613 | > SCREWED FLANGE G1 1/4" LK-75 ST37VZ | 1 |
| 3.5 | 2032614 | > O-RING ID.29,82X2,62N DIN3771 E7502 | 1 |
| 3.6 | 2032615 | > SPACER F.I/A KUH.DN32 CUZN | 1 |
| 3.7 | 2032616 | > O-RING ID.44X3,53N DIN3771 E7502 | 1 |
| 4 | 4199877 | DELIVERY SIDE Siboost Helix V2/4/6 KIT | 1 |
| 3.1 | 2032610 | > NUT G11/4 MS VP. | 1 |
| 3.2 | 2032611 | > O-RING ID.36,09X3,53N DIN3771 E7502 | 1 |
| 3.3 | 2507646 | > BALL VALVE G11/4"M-F-W.HANDLE 1/4-TURN | 1 |
| 3.4 | 2032613 | > SCREWED FLANGE G1 1/4" LK-75 ST37VZ | 1 |
| 3.5 | 2032614 | > O-RING ID.29,82X2,62N DIN3771 E7502 | 1 |
| 4.1 | 2058116 | > SPACER F.I/A KUH.DN32 CUZN | 1 |
| 3.7 | 2032616 | > O-RING ID.44X3,53N DIN3771 E7502 | 1 |
| 4.2 | 2058115 | > HOUSING RFV(RV-IN) DN32 SGS/DRS | 1 |
| 4.3 | 2027870 | > NON-RETURN-DEVICE INSERT DN32(MTR) | 1 |
| 5 | 2032642 | DIAPHREM TANK 8L/PN16 DIN4807/T5 KIT | 1 |
| 5.1 | 2045914 | > DIAPHREM TANK 8L TYP-DD 16BAR | 1 |
| 5.2 | 2027853 | > FLOW FITTING G3/4 FOR DIAPHRAGM VES. | 1 |
| 6 | 4197076 | PRESSURE SENSOR/ GAUGE 0-16BAR KIT | 1 |
| 6.1 | 2085909 | > PRESS.SENSOR 1/4" 0-16BAR 4-20MA VP. | 1 |

| Item | Article no. | Description | Quantity |
|---|---|---|---|
| 6.2 | 4197077 | > T-PIECE 1/4" VP. | 1 |
| 6.3 | 2028692 | > PRESSURE GAUGE NG63-PN16-G1/4 | 1 |
| 6.4 | 2028291 | > BALL TAP R1/4" PN42 GIACOMINI R254DL | 1 |
| 6.5 | 2028691 | > BLOWGUN 1/4" MS 30BAR VP. | 1 |
| 7 | 4200092 | PIPE DE2 2''-2x1"1/4+1x1/4x600 VP. | 1 |
| 8 | 4200093 | PIPE DE2 2''-2x11/4"+1x1/4+1x3/4x600 VP. | 1 |
| 9 | | W-CTRL-SCE-B-2x4,0KW-T4-FM-ND2 | 1 |
| Note: TO / BIS / JUSQU'AU 18/05/2014 | | | |
| 9 | 2541905 | W-CTRL-SCE-B-2x13A-T34-FM-ND2-AVC-PKG | 1 |
| Note: FROM / AB / À PARTIR DU 19/05/2014 | | | |
| 10 | 4197079 | PLUG G1/4"x10 AISI304 KIT | 1 |
| 11 | 2032654 | PLUG R3/4" MS VIEGA 1751 | 1 |
| 20 | 2521150 | ASSEMBLY WMS. DE-EB. +VP | 1 |
| 20.1 | 2028652 | > PRESSURE SWITCH PS3-ASR 1/(1,3) VP. | 1 |
| 20.2 | 2130983 | > PLUG PS3-415 WITH KABEL 1,5M 2NO VP. | 1 |
| 20.4 | 2028290 | > CROSSPIECE R1/4" MS-NICKEL | 1 |
| 20.5 | 2028687 | > PRESSURE GAUGE NG63 R1/4" HI.0-6BAR | 1 |
| 20.6 | 2054268 | > DUAL NIPPLE G1/4" x G1/4" MS VP. | 1 |
| 20.7 | 2028691 | > BLOWGUN 1/4" MS 30BAR VP. | 1 |
| 20.8 | 2028291 | > BALL TAP R1/4" PN42 GIACOMINI R254DL | 1 |

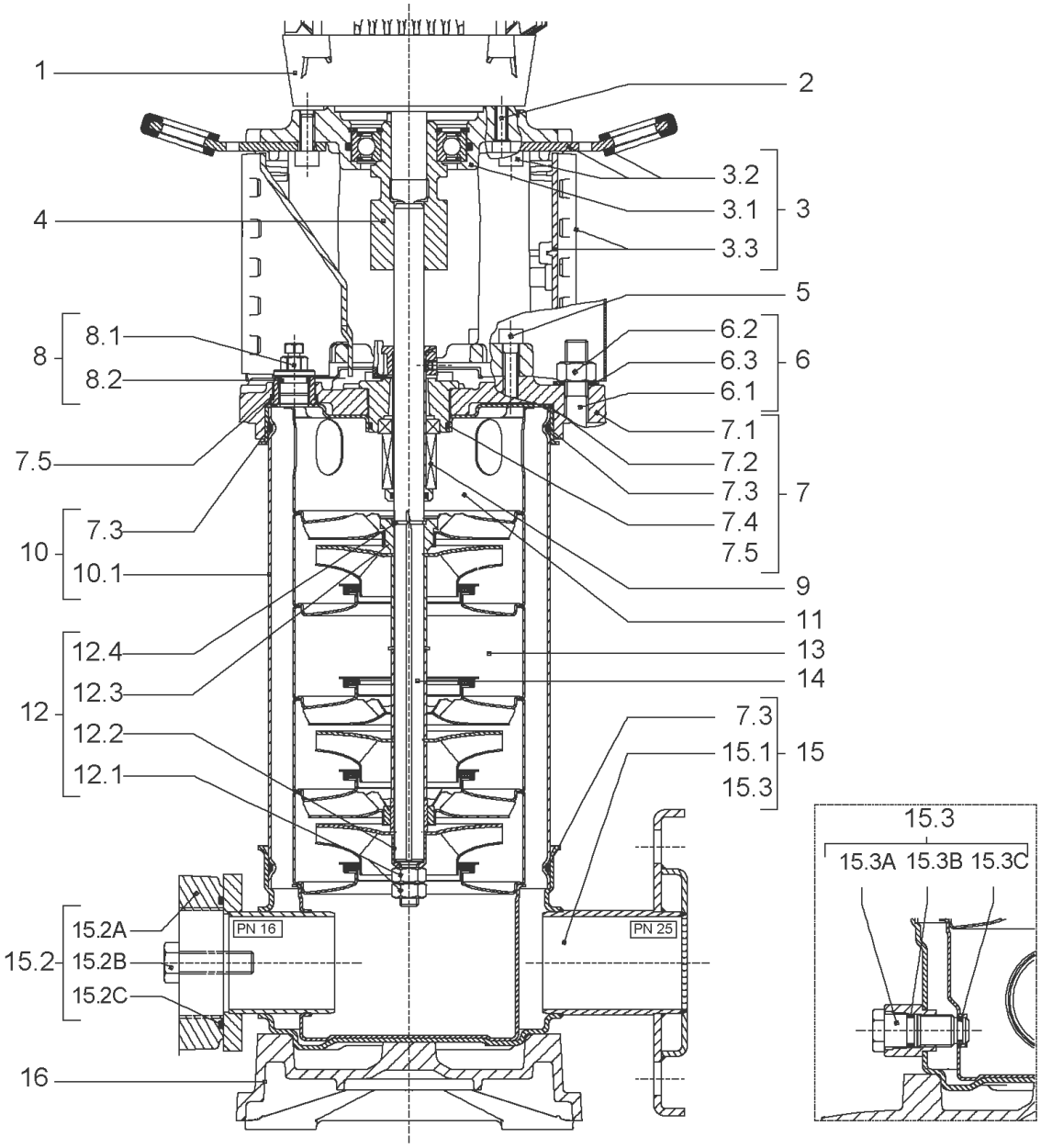
1
2
3.2
3.1
3
3.3
4
5
8.1
8
8.2
6.2
6.3
6
6.1
7.1
7.5
7.2
7.3
7
7.4
7.3
10
7.5
10.1
9
11
12.4
13
12.3
14
12
12.2
7.3
15.1
15
12.1
15.3
15.3
15.3A 15.3B 15.3C
15.2A
PN 16
PN 25
15.2
15.2B
15.2C
16

| Item | Article no. | Description | Quantity |
|---|---|---|---|
| 1 | | DRIVE HELIX-VE611-IE2-ATB KIT | 1 |
| Note: MOTOR BRAND ATB | | | |
| 1 | | DRIVE HELIX-VE611IE2-WE KIT | 1 |
| Note: MOTOR BRAND WILO ELEC | | | |
| 1 | | DRIVE HELIX-VE611-IE4-WE KIT | 1 |
| Note: MOTOR BRAND WILO ELEC | | | |
| 2 | 4206025 | SCREW M8X45 (4 PIECES) | 1 |
| 3 | 4172789 | LANTERN FT130 HELIX V10 KIT | 1 |
| 3.1 | | > M+5_6_LANTERN_ONE-PIECE_FT130_CATA | 1 |
| 3.2 | 2127604 | > EYELET CPL.FT HELIX(2 PIECES) | 1 |
| 3.3 | 4159692 | > COUPLING PROTECTOR FT HELIX KIT | 1 |
| 4 | 4159710 | COUPLING D.16XD.28 FT130 HELIX KIT | 1 |
| 5 | 4159707 | SCREW M8X30 (4 PIECES) | 1 |
| 6 | 4177842 | STUD BOLT M12X638KIT | 1 |
| 6.1 | | > TIE BOLT M12-638x18x30-1.4057 | 1 |
| 6.2 | 2094647 | > NUT M12 M12 ISO4032 VP. | 1 |
| 6.3 | 2123557 | > WASHER CS-12.4-24-1.6-NFE25 (4 PIECES) | 1 |
| 7 | 4210143 | STATIONARY RING HOLDER HELIX 6" EPDM | 1 |
| 7.2 | 2127607 | > STATIONARY RING HOLDER 6" HELIX 1.4301 V | 1 |
| 7.3 | 4176513 | > O-RING FOR PUMP JACKET VP. | 1 |
| 7.4 | 2127603 | > O-RING ID.37,6x2,4 EPDM VP. | 1 |
| 7.5 | 2127602 | > O-RING ID.21,35x2 EPDM VP. | 1 |
| 8 | 4159686 | FILING/PURGING PLUG HELIX EPDM KIT | 1 |
| 9 | 4171327 | SEAL-KIT-HELIX6-10-16 O/E KIT | 1 |
| 10 | 4177843 | HOUSING PIPES D.152X510 1.4307 KIT | 1 |
| 7.3 | 4176513 | > O-RING FOR PUMP JACKET VP. | 1 |
| 10.1 | | > HOUSING-PIPE Ø152-M+1012/1609-304 | 1 |
| 11 | 4174087 | CENTERING STAGE-RETURN HELIX6 1.4301VP. | 1 |
| 12 | 4174086 | SHAFTS EQUIPMENT HELIX V6 MONOBLOC KIT | 1 |
| 12.1 | | > NUT-H-M10-A4.70 | 1 |
| 12.2 | | > SERRATED LOCK WASHER M+6M3-316L | 1 |
| 12.3 | | > IMPELLER STOP RING L33,2-304 | 1 |
| 12.4 | | > STOP-RUSH-1/2-D16xd2-M+316 | 1 |
| 13 | | HYDRAULIC HELIX V 611 1.4307 | 1 |

| Item | Article no. | Description | Quantity |
|---|---|---|---|
| 14 | 4177844 | SHAFT D.16X630 1.4301 VP. | 1 |
| 15 | 4217897 | PUMP HOUSING HELIX DN32 PN16 1.4301 KIT | 1 |
| 7.3 | 4176513 | > O-RING FOR PUMP JACKET VP. | 1 |
| 15.1 | | > BLASTING PPE HOUSING V-PN16-DN32-5"-304 | 1 |
| 15.2 | 4217891 | > COUNTER FLANGE-G1"1/4-PN16-GJL KIT | 1 |
| 15.3 | 4171321 | > PRIMING/DRAIN PLUG EPDM HELIX KIT | 1 |
| 16 | 4177964 | BASEPLATE HELIX V2/4/6 PN16 VP. | 1 |

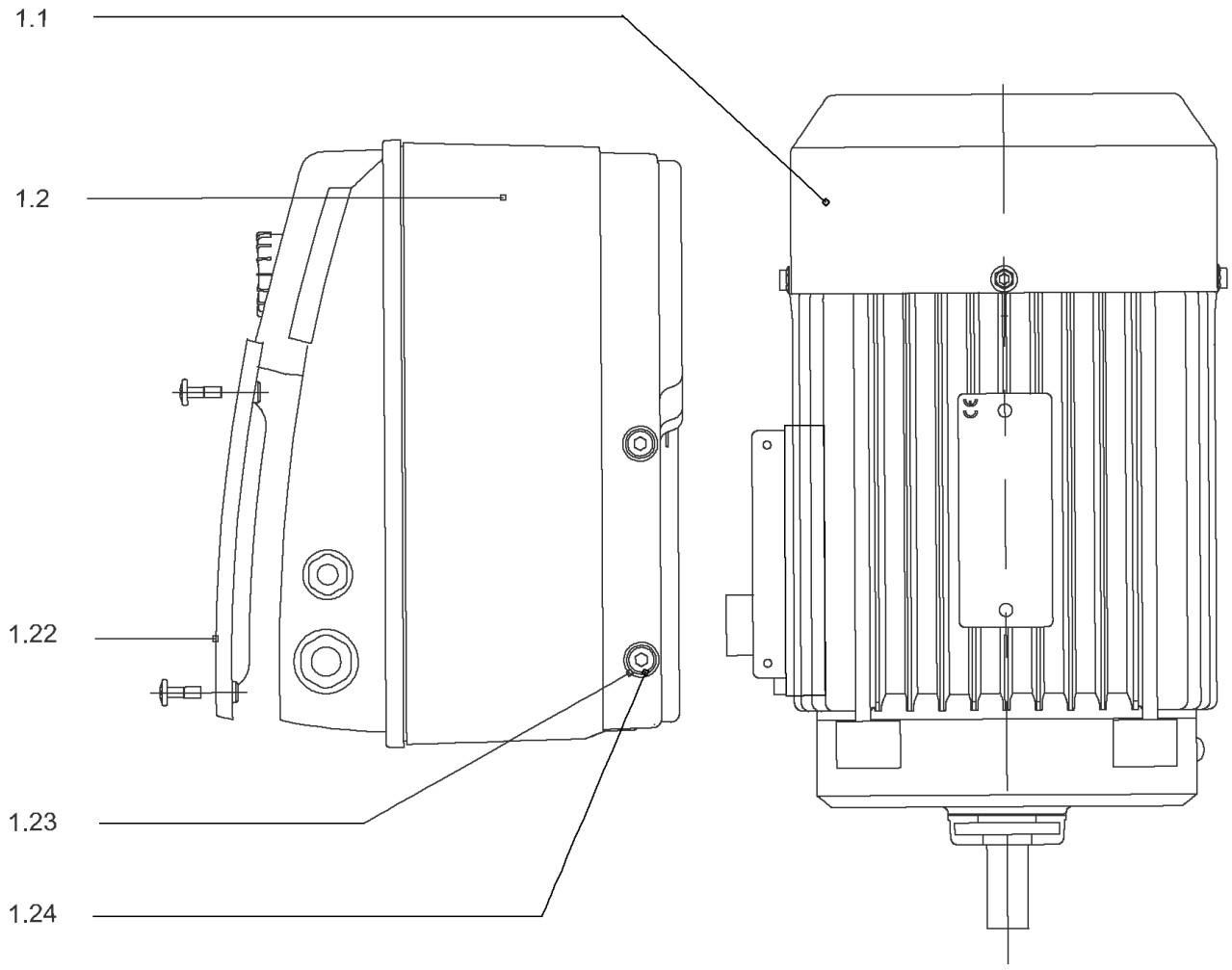
1.1
1.2
1.22
1.23
1.24

## DRIVE HELIX-VE611-IE2-ATB KIT

| Item | Article no. | Description | Quantity |
|---|---|---|---|
| 1.1 | | MOTOR 4/2/112 3~ 380V 60HZ IE2 ATB VP. | 1 |
| Note: no longer available/nicht mehrlieferbarn'est plus disponible | | | |
| | | SPARE PARTS MOTOR:ON REQUEST | 1 |
| 1.2 | 4186772 | MODULE HELIX-VE611-IE2-ATB KIT | 1 |
| 1.22 | 2054227 | > MODULE COVER/GASKET TL3/4 KIT | 1 |
| 1.23 | 4215716 | > SCREW M5X16 DIN912 8.8 A2A (4pieces) VP. | 1 |
| 1.24 | 2057978 | > RONDELLE A5,3 DIN6797 FST ZN (4 PIECES) | 1 |

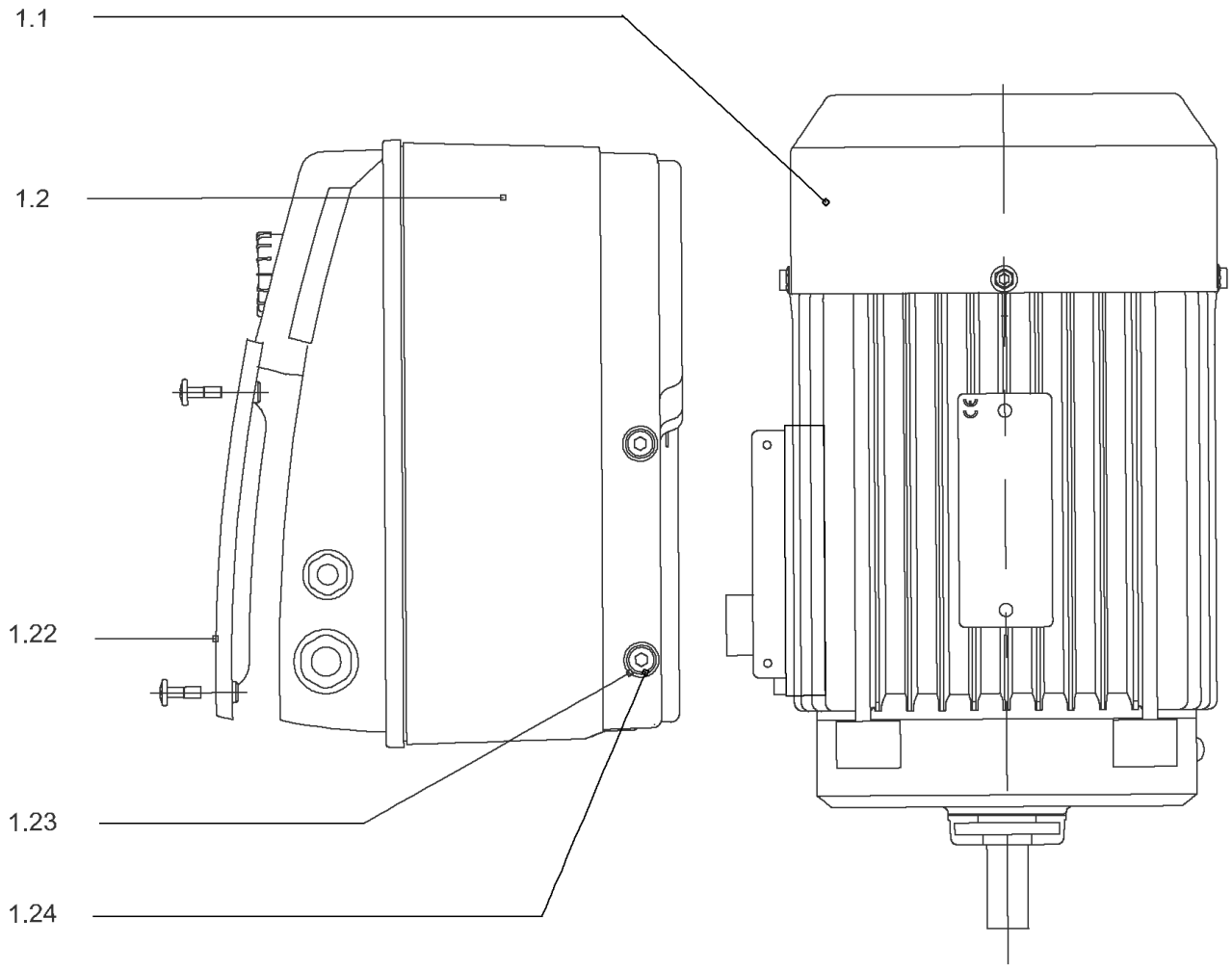
1.1
1.2
1.22
1.23
1.24

## DRIVE HELIX-VE611IE2-WE KIT

| Item | Article no. | Description | Quantity |
|---|---|---|---|
| 1.1 | 4188824 | MO.4/2/112 3~380V 60Hz IE2 WE VP. | 1 |
| | | SPARE PARTS MOTOR:ON REQUEST | 1 |
| 1.2 | 4186332 | MODULE HELIX-VE611-IE2-WE KIT | 1 |
| 1.22 | 2054227 | > MODULE COVER/GASKET TL3/4 KIT | 1 |
| 1.23 | 4215716 | > SCREW M5X16 DIN912 8.8 A2A (4pieces) VP. | 1 |
| 1.24 | 2057978 | > RONDELLE A5,3 DIN6797 FST ZN (4 PIECES) | 1 |

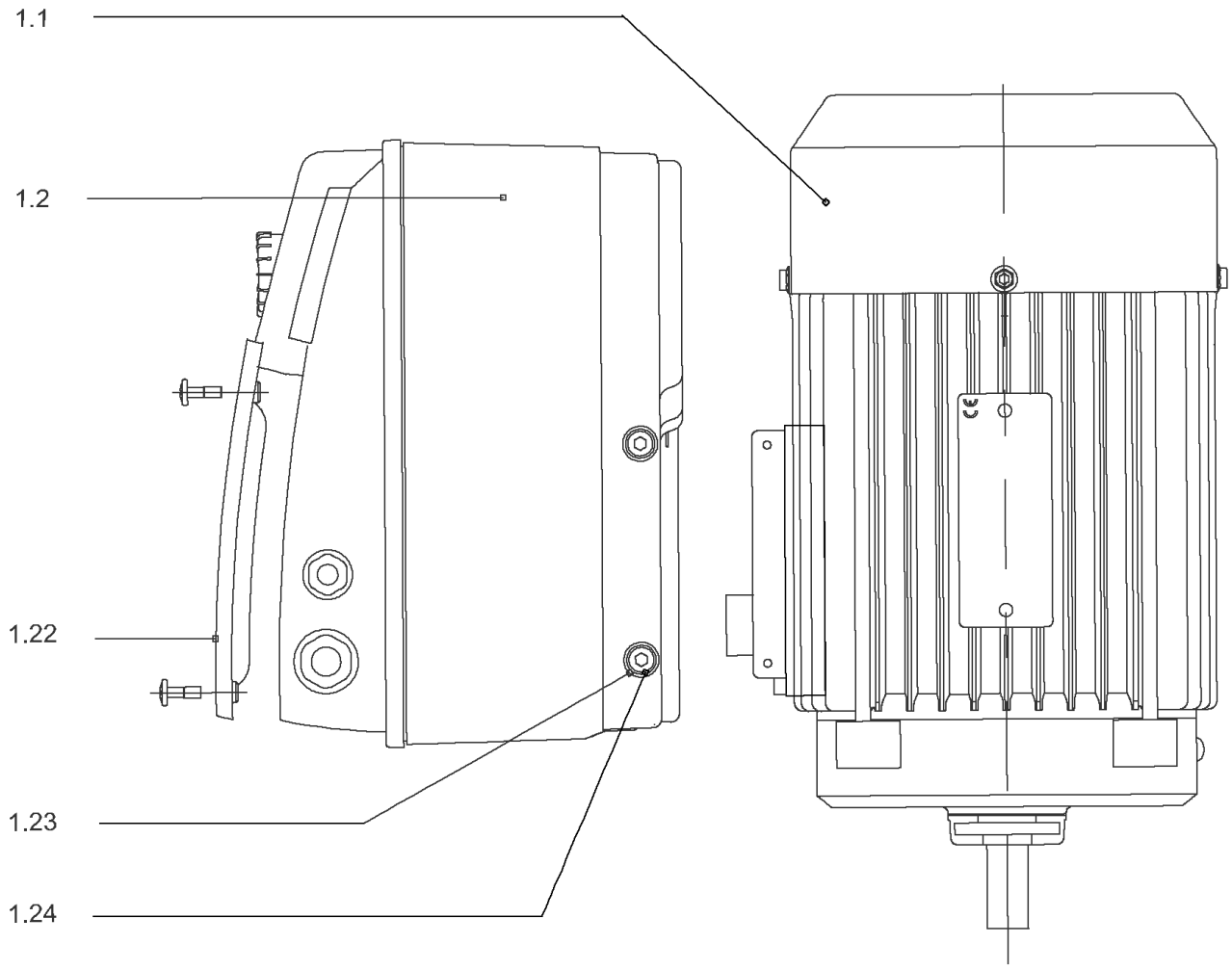
1.1
1.2
1.22
1.23
1.24

## DRIVE HELIX-VE611-IE4-WE KIT

| Item | Article no. | Description | Quantity |
|---|---|---|---|
| 1.1 | 4207924 | MOTOR 4/2/112 3~ 380V 60HZ IE4 WE VP. | 1 |
| | | SPARE PARTS MOTOR:ON REQUEST | 1 |
| 1.2 | 4209605 | MODULE HELIX-VE611-IE4-WE KIT | 1 |
| 1.22 | 2054227 | > MODULE COVER/GASKET TL3/4 KIT | 1 |
| 1.23 | 4215716 | > SCREW M5X16 DIN912 8.8 A2A (4pieces) VP. | 1 |
| 1.24 | 2057978 | > RONDELLE A5,3 DIN6797 FST ZN (4 PIECES) | 1 |

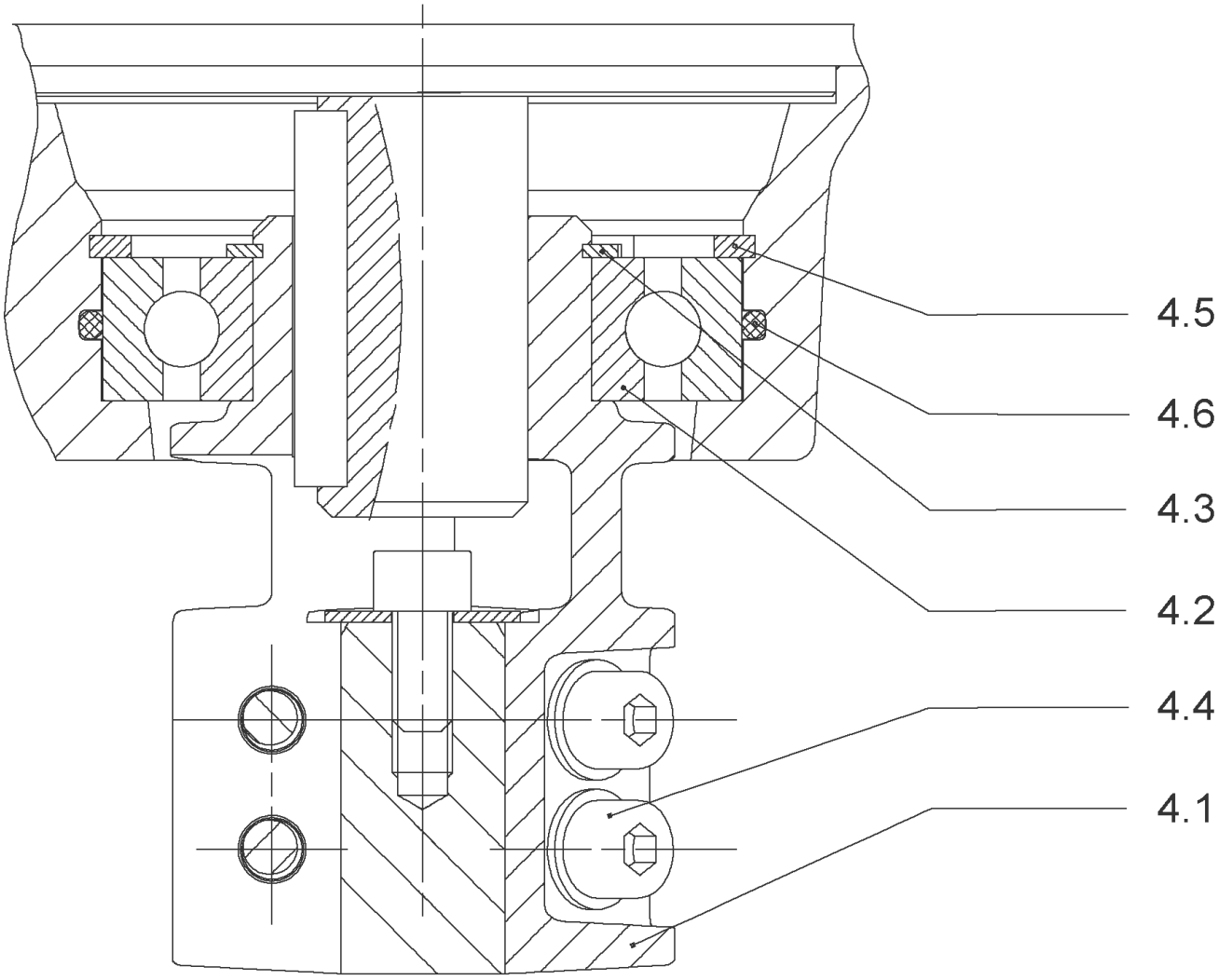
4.5
4.6
4.3
4.2
4.4
4.1

## COUPLING D.16XD.28 FT130 HELIX KIT (4159710)

| Item | Article no. | Description | Quantity |
|---|---|---|---|
| 4.1 | | COUPLING M+ Ø16XØ28 FT130 MACHINED | 1 |
| 4.2 | 2131022 | BALL BEARING 6209/ZZ-C3(HT)VP. | 1 |
| 4.3 | 4233930 | CIRCLIP-FOR-BORES-D45x1,75 VP. | 1 |
| 4.4 | 4157726 | SCREW KIT M8X30 (4 PIECES) | 1 |
| 4.5 | 4234252 | CIRCLIPS 85X3 VP. | 1 |
| 4.6 | 4234243 | O-RING 85X3 VP. | 1 |
| | | NOMEL CONTACT WASHER 8x16x1,4 STEEL ZC | 1 |

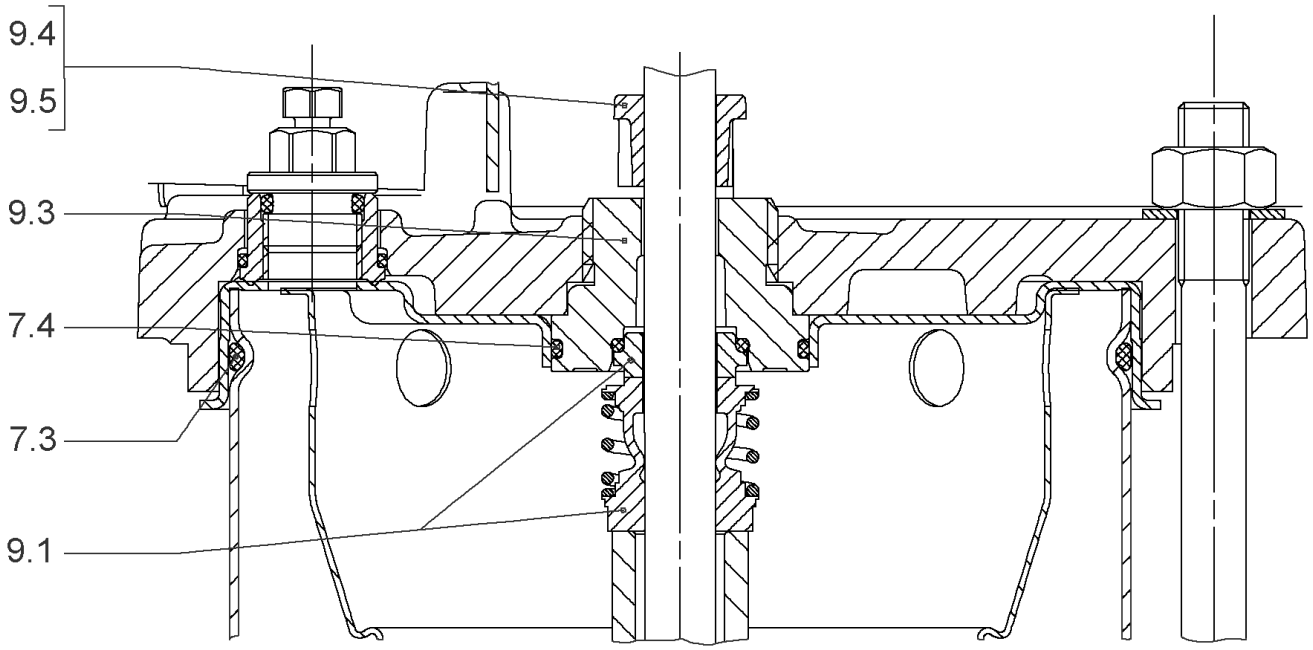
9.4
9.5
9.3
7.4
7.3
9.1

## SEAL-KIT-HELIX6-10-16 O/E KIT (4171327)

| Item | Article no. | Description | Quantity |
|---|---|---|---|
| 7.3 | 4176513 | O-RING FOR PUMP JACKET VP. | 1 |
| 7.4 | 2127603 | O-RING ID.37,6x2,4 EPDM VP. | 1 |
| 9.1 | 4177801 | MECH.SEAL HELIX6-10-16 O/E VP. | 1 |
| 9.3 | 4177798 | MACHINED RING HOLDER M+6" Ø16 304 VP. | 1 |
| 9.5 | 4177799 | MACHINED DRIVE RING Ø16 VP. | 1 |
| 9.4 | 4176520 | SCREW CH M5x5 A4-70 ( 3PIECES ) | 1 |

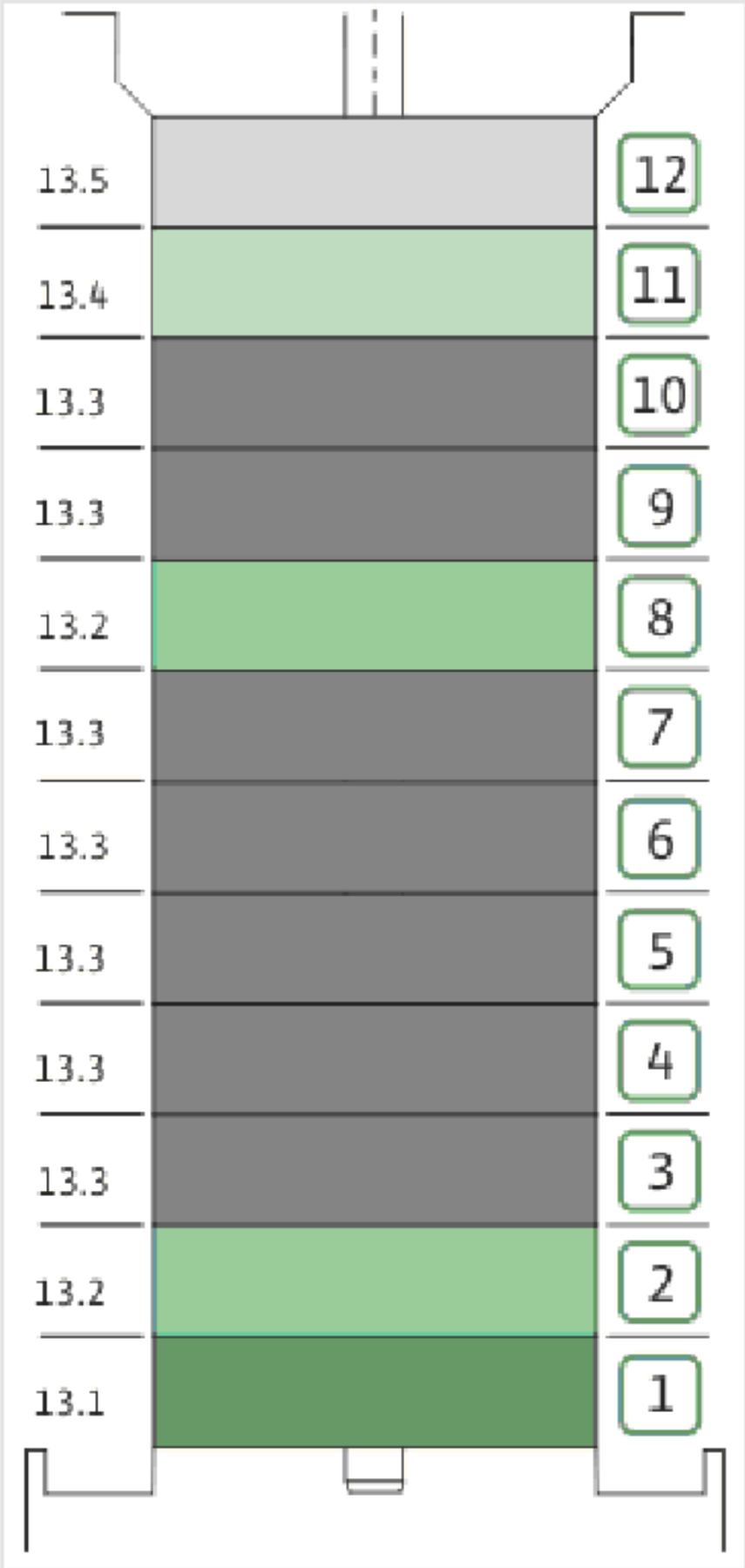
13.5
13.4
13.3
13.3
13.2
13.3
13.3
13.3
13.3
13.3
13.2
13.1
12
11
10
9
8
7
6
5
4
3
2
1

| Item | Article no. | Description | Quantity |
|---|---|---|---|
| 13.1 | 4174084 | STAGE HELIX 6 1.4301 KIT | 1 |
| | | > MACH.STG-CASING-WOGV-WNR-M+6-304 | 1 |
| | | > IMPELLER-M+6-304 | 1 |
| 13.2 | 4174089 | INTERMEDIATE STAGE HELIX 6 1.4301 KIT | 1 |
| | | > MACH.BEARING-STG-CASING-WNR-M+6-304 | 1 |
| | | > IMPELLER-M+6-304 | 1 |
| | | > SHAFT SLEEVE-SPACER-Ø19,35x18,465-304 | 1 |
| | | > SHAFT-SLEEVE-D16xD20x18-CW | 1 |
| 13.3 | 4174090 | INTERMEDIATE STAGE HELIX 6 1.4301 KIT | 1 |
| | | > MACH.STD-STG-CASING-WGV+NR-M+6-304 | 1 |
| | | > IMPELLER-M+6-304 | 1 |
| | | > IMPELLER SPACER Ø16,05X19,45-L36,465-304 | 1 |
| 13.4 | 4174092 | EMPTY STAGE HELIX6 1.4301KIT | 1 |
| | | > MACH.STD-STG-CASING-WGV+NR-M+6-304 | 1 |
| | | > FLAT WASHER-D16.1XD22X1.2-316L | 1 |
| | | > IMPELLER SPACER Ø16,05X19,45-L36,465-304 | 1 |
| 13.5 | 4174091 | STAGE HELIX 6 1.4301 KIT | 1 |
| | | > MACH.STG-CASING-WOGV-WNR-M+6-304 | 1 |
| | | > IMPELLER-M+6-304 | 1 |
| | | > IMPELLER SPACER Ø16,05X19,45-L36,465-304 | 1 |

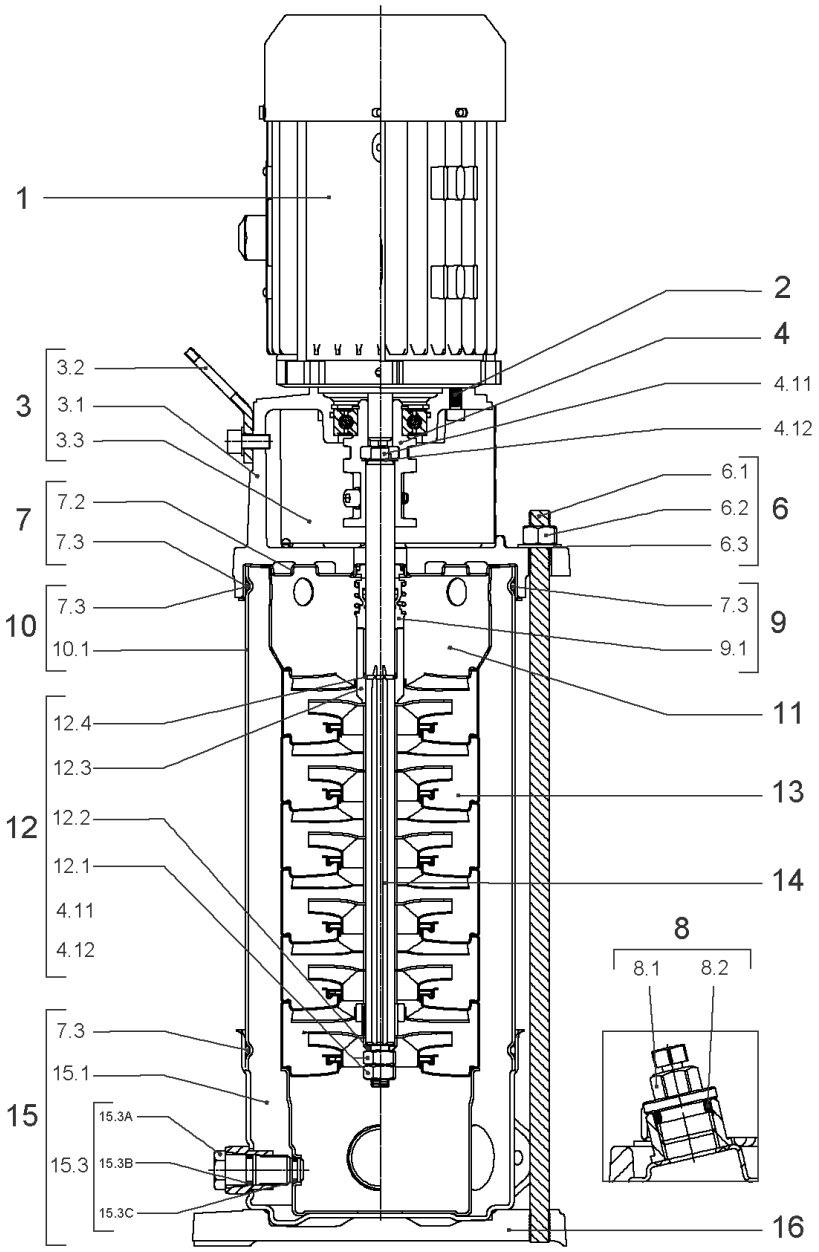
1
2
4
4.11
4.12
3
3.2
3.1
3.3
7
7.2
7.3
6
6.1
6.2
6.3
10
7.3
10.1
9
7.3
9.1
11
12
12.4
12.3
12.2
12.1
4.11
4.12
13
14
8
8.1
8.2
15
7.3
15.1
15.3
15.3A
15.3B
15.3C
16

## HELIX VE611-1/16/E/S (4201587)

| Item | Article no. | Description | Quantity |
|---|---|---|---|
| 1 | | DRIVE HELIX-VE611-IE4-WE KIT | 1 |
| Note: MOTOR BRAND WILO ELEC | | | |
| | | SPARE PARTS MOTOR:ON REQUEST | 1 |
| 2 | 4159707 | SCREW M8X30 (4 PIECES) | 1 |
| 3 | 4214473 | LANTERN FT130 HELIX KIT | 1 |
| 3.1 | | > LANT-MOT-VMI-ReDTC6"-FT130-MACHINED+CATA | 1 |
| 3.2 | 4184852 | > EYELET CPL.FT HELIX (2 PIECES) | 1 |
| 3.3 | 4213782 | > COUPLING PROTECTOR FT115/130 HELIX KIT | 1 |
| 4 | 4159710 | COUPLING D.16XD.28 FT130 HELIX KIT | 1 |
| 6 | 4177842 | STUD BOLT M12X638KIT | 1 |
| 6.1 | | > TIE BOLT M12-638x18x30-1.4057 | 1 |
| 6.2 | 2094647 | > NUT M12 M12 ISO4032 VP. | 1 |
| 6.3 | 2123557 | > WASHER CS-12.4-24-1.6-NFE25 (4 PIECES) | 1 |
| 7 | 4214481 | STATIONARY RING HOLDER HELIX D27 ReDTC | 1 |
| 7.2 | 4214479 | > STATIONARY RING HOLDER HELIX D27 VP. | 1 |
| 7.3 | 4176513 | > O-RING FOR PUMP JACKET VP. | 1 |
| 8 | 4212724 | FILING/PURGING PLUG HELIX ReDTC KIT | 1 |
| 8.1 | | > FILLING PLUG MVI6"-304 | 1 |
| 8.2 | 4177800 | > O-RING EPDM PLUG HELIX VP. | 1 |
| 9 | 4214483 | MECH.SEAL HELIX6-10-16 O/E ReDTC KIT | 1 |
| 9.1 | 4177801 | > MECH.SEAL HELIX6-10-16 O/E VP. | 1 |
| 7.3 | 4176513 | > O-RING FOR PUMP JACKET VP. | 1 |
| 10 | 4177843 | HOUSING PIPES D.152X510 1.4307 KIT | 1 |
| 7.3 | 4176513 | > O-RING FOR PUMP JACKET VP. | 1 |
| 10.1 | | > HOUSING-PIPE Ø152-M+1012/1609-304 | 1 |
| 11 | 4174087 | CENTERING STAGE-RETURN HELIX6 1.4301VP. | 1 |
| 12 | 4214486 | SHAFT EQUIPMENT HELIX V6 ReDTC KIT | 1 |
| 12.1 | | > NUT-H-M10-A4.70 | 1 |
| 12.2 | | > SERRATED LOCK WASHER M+6M3-316L | 1 |
| 12.3 | | > 1/2-SNAP-RING-6/10M3-316L | 1 |
| 12.4 | | > STOP-RUSH-1/2-D16xd2-M+316 | 1 |
| 4.11 | | > SCREW CHC-M6X14-8.8-ISO4762-GEOMET500A | 1 |
| 4.12 | | > WASHER D.24 L6U ZINK | 1 |
| 13 | | HYDRAULIC HELIX V 611 1.4307 | 1 |

| Item | Article no. | Description | Quantity |
|---|---|---|---|
| 14 | 4214510 | SHAFT D.16X578 HELIX 1.4057 VP. | 1 |
| 15 | 4217897 | PUMP HOUSING HELIX DN32 PN16 1.4301 KIT | 1 |
| 7.3 | 4176513 | > O-RING FOR PUMP JACKET VP. | 1 |
| 15.1 | | > BLASTING PPE HOUSING V-PN16-DN32-5"-304 | 1 |
| 15.2 | 4217891 | > COUNTER FLANGE-G1"1/4-PN16-GJL KIT | 1 |
| 15.3 | 4171321 | > PRIMING/DRAIN PLUG EPDM HELIX KIT | 1 |
| 16 | 4177964 | BASEPLATE HELIX V2/4/6 PN16 VP. | 1 |

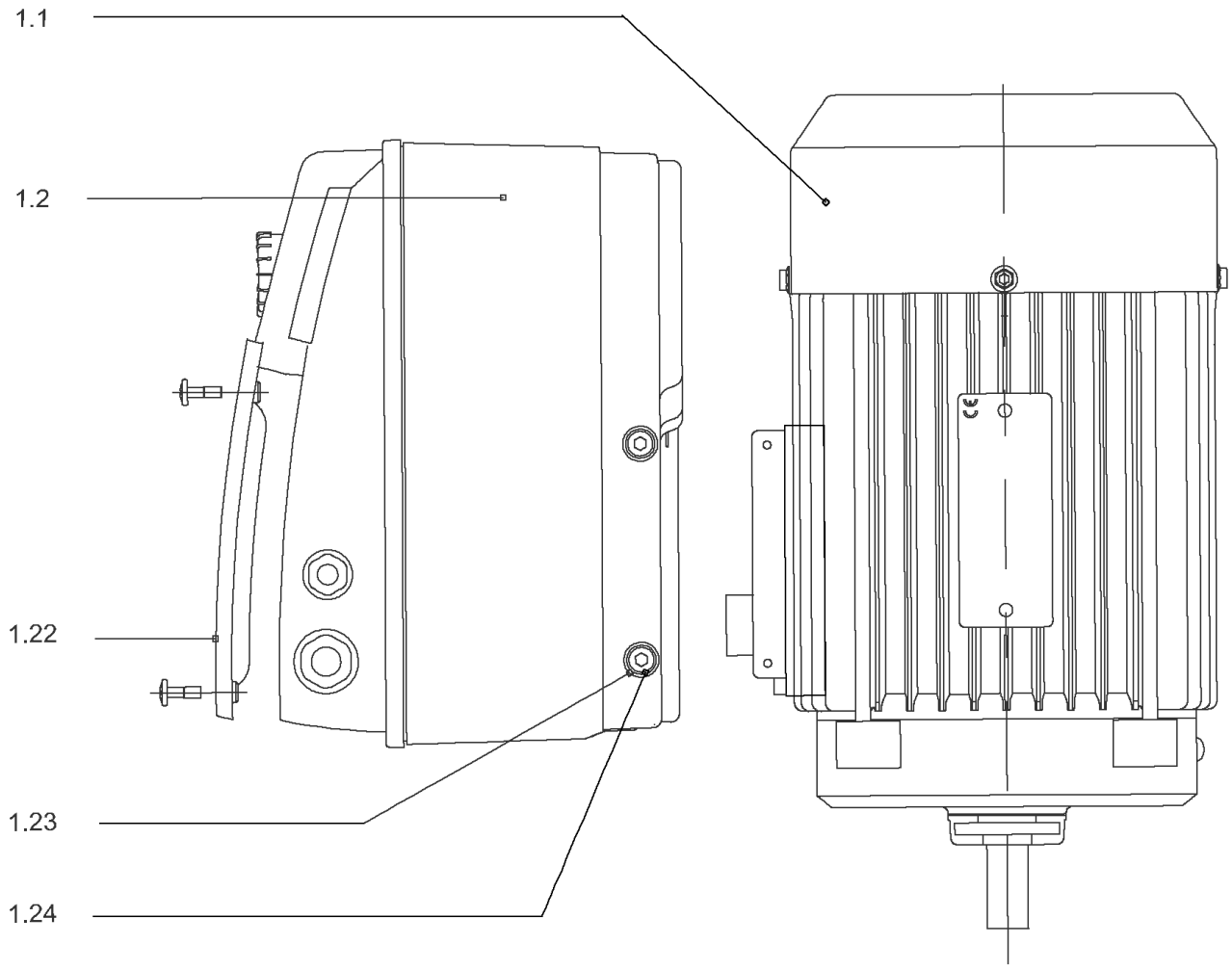
1.1
1.2
1.22
1.23
1.24

## DRIVE HELIX-VE611-IE4-WE KIT

| Item | Article no. | Description | Quantity |
|---|---|---|---|
| 1.1 | 4207924 | MOTOR 4/2/112 3~ 380V 60HZ IE4 WE VP. | 1 |
| | | SPARE PARTS MOTOR:ON REQUEST | 1 |
| 1.2 | 4209605 | MODULE HELIX-VE611-IE4-WE KIT | 1 |
| 1.22 | 2054227 | > MODULE COVER/GASKET TL3/4 KIT | 1 |
| 1.23 | 4215716 | > SCREW M5X16 DIN912 8.8 A2A (4pieces) VP. | 1 |
| 1.24 | 2057978 | > RONDELLE A5,3 DIN6797 FST ZN (4 PIECES) | 1 |

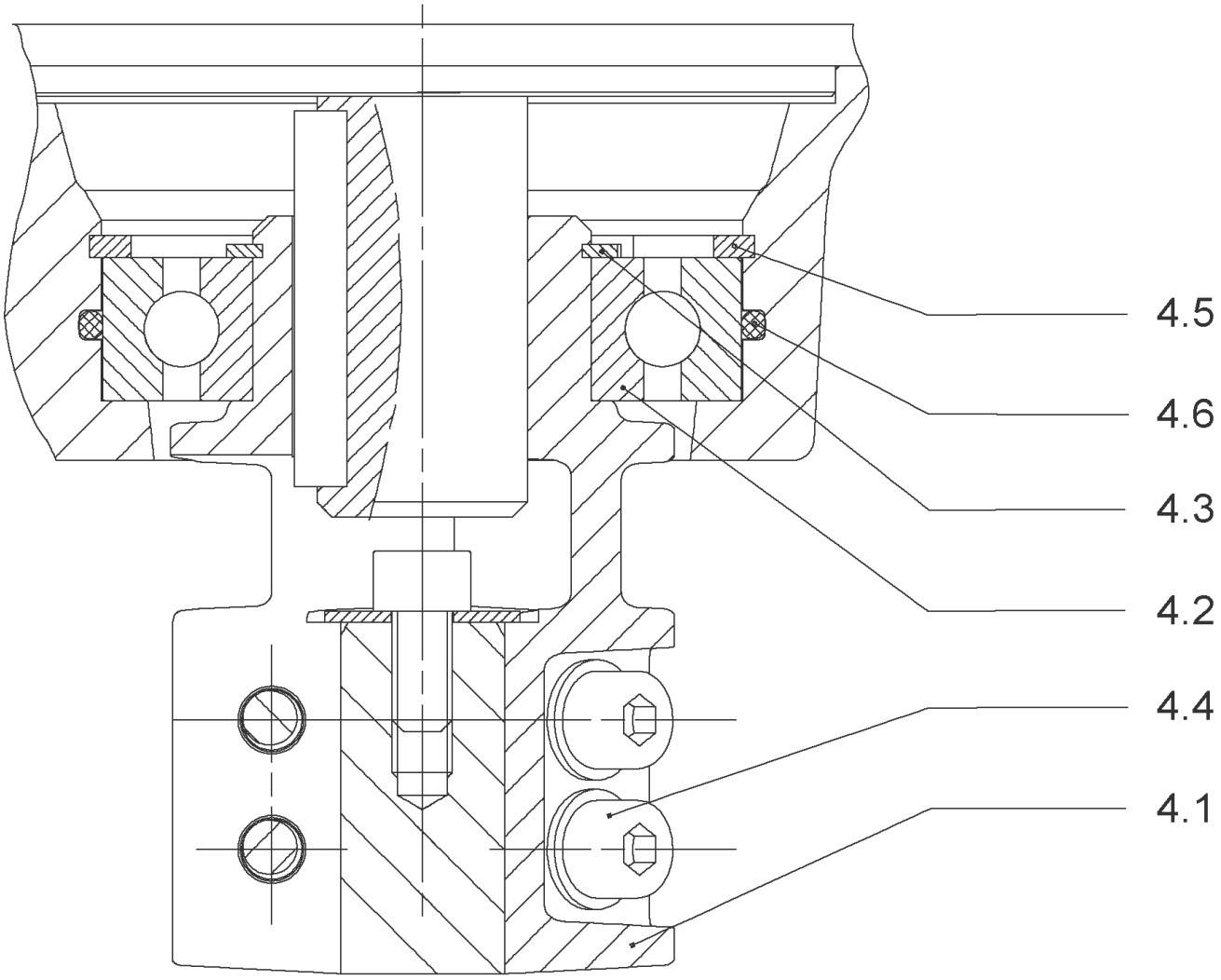
4.5
4.6
4.3
4.2
4.4
4.1

## COUPLING D.16XD.28 FT130 HELIX KIT (4159710)

| Item | Article no. | Description | Quantity |
|---|---|---|---|
| 4.1 | | COUPLING M+ Ø16XØ28 FT130 MACHINED | 1 |
| 4.2 | 2131022 | BALL BEARING 6209/ZZ-C3(HT)VP. | 1 |
| 4.3 | 4233930 | CIRCLIP-FOR-BORES-D45x1,75 VP. | 1 |
| 4.4 | 4157726 | SCREW KIT M8X30 (4 PIECES) | 1 |
| 4.5 | 4234252 | CIRCLIPS 85X3 VP. | 1 |
| 4.6 | 4234243 | O-RING 85X3 VP. | 1 |
| | | NOMEL CONTACT WASHER 8x16x1,4 STEEL ZC | 1 |

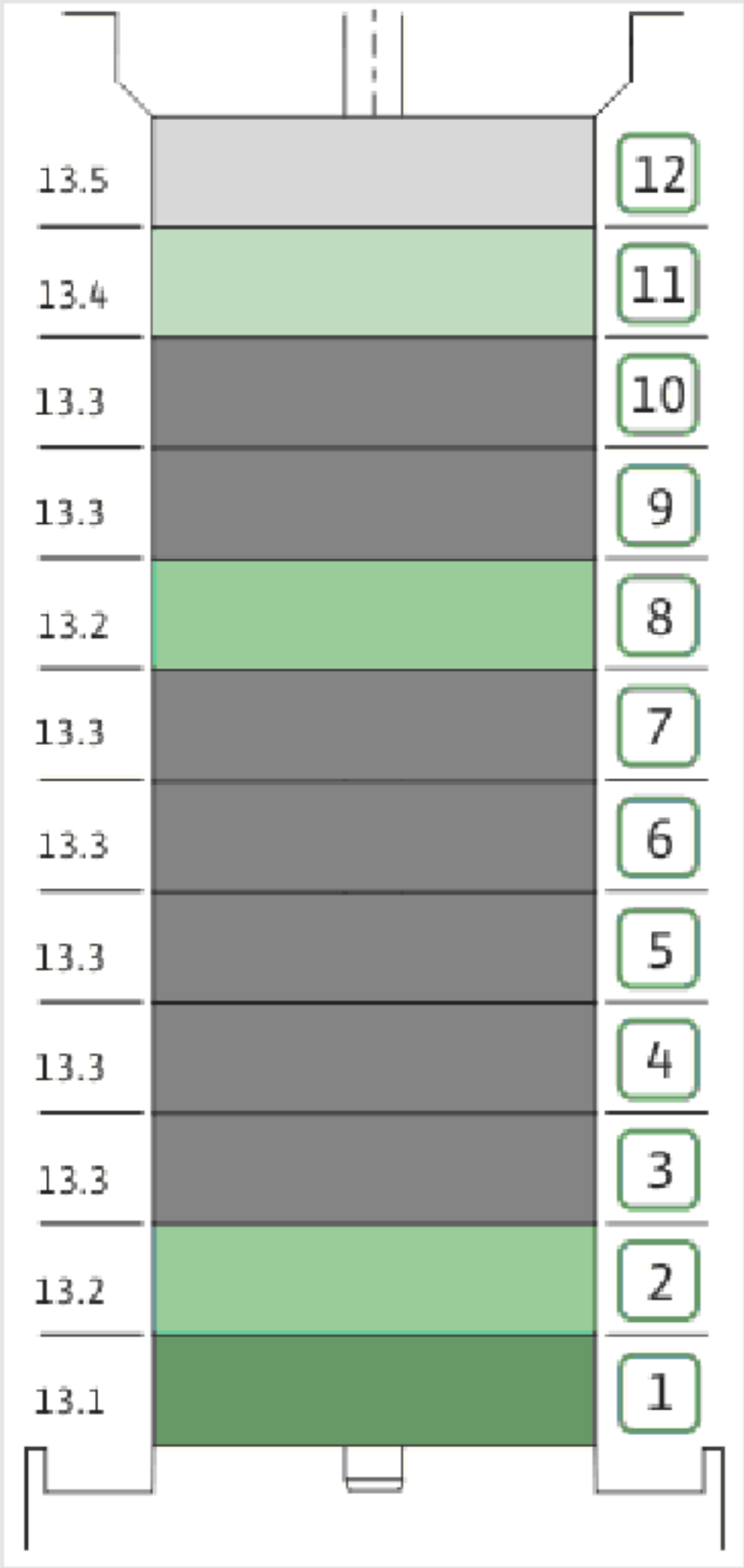
13.5
13.4
13.3
13.3
13.2
13.3
13.3
13.3
13.3
13.3
13.2
13.1
12
11
10
9
8
7
6
5
4
3
2
1

## HYDRAULIC HELIX V 611 1.4307

| Item | Article no. | Description | Quantity |
|---|---|---|---|
| 13.1 | 4174084 | STAGE HELIX 6 1.4301 KIT | 1 |
| | | > MACH.STG-CASING-WOGV-WNR-M+6-304 | 1 |
| | | > IMPELLER-M+6-304 | 1 |
| 13.2 | 4174089 | INTERMEDIATE STAGE HELIX 6 1.4301 KIT | 1 |
| | | > MACH.BEARING-STG-CASING-WNR-M+6-304 | 1 |
| | | > IMPELLER-M+6-304 | 1 |
| | | > SHAFT SLEEVE-SPACER-Ø19,35x18,465-304 | 1 |
| | | > SHAFT-SLEEVE-D16xD20x18-CW | 1 |
| 13.3 | 4174090 | INTERMEDIATE STAGE HELIX 6 1.4301 KIT | 1 |
| | | > MACH.STD-STG-CASING-WGV+NR-M+6-304 | 1 |
| | | > IMPELLER-M+6-304 | 1 |
| | | > IMPELLER SPACER Ø16,05X19,45-L36,465-304 | 1 |
| 13.4 | 4174092 | EMPTY STAGE HELIX6 1.4301KIT | 1 |
| | | > MACH.STD-STG-CASING-WGV+NR-M+6-304 | 1 |
| | | > FLAT WASHER-D16.1XD22X1.2-316L | 1 |
| | | > IMPELLER SPACER Ø16,05X19,45-L36,465-304 | 1 |
| 13.5 | 4174091 | STAGE HELIX 6 1.4301 KIT | 1 |
| | | > MACH.STG-CASING-WOGV-WNR-M+6-304 | 1 |
| | | > IMPELLER-M+6-304 | 1 |
| | | > IMPELLER SPACER Ø16,05X19,45-L36,465-304 | 1 |

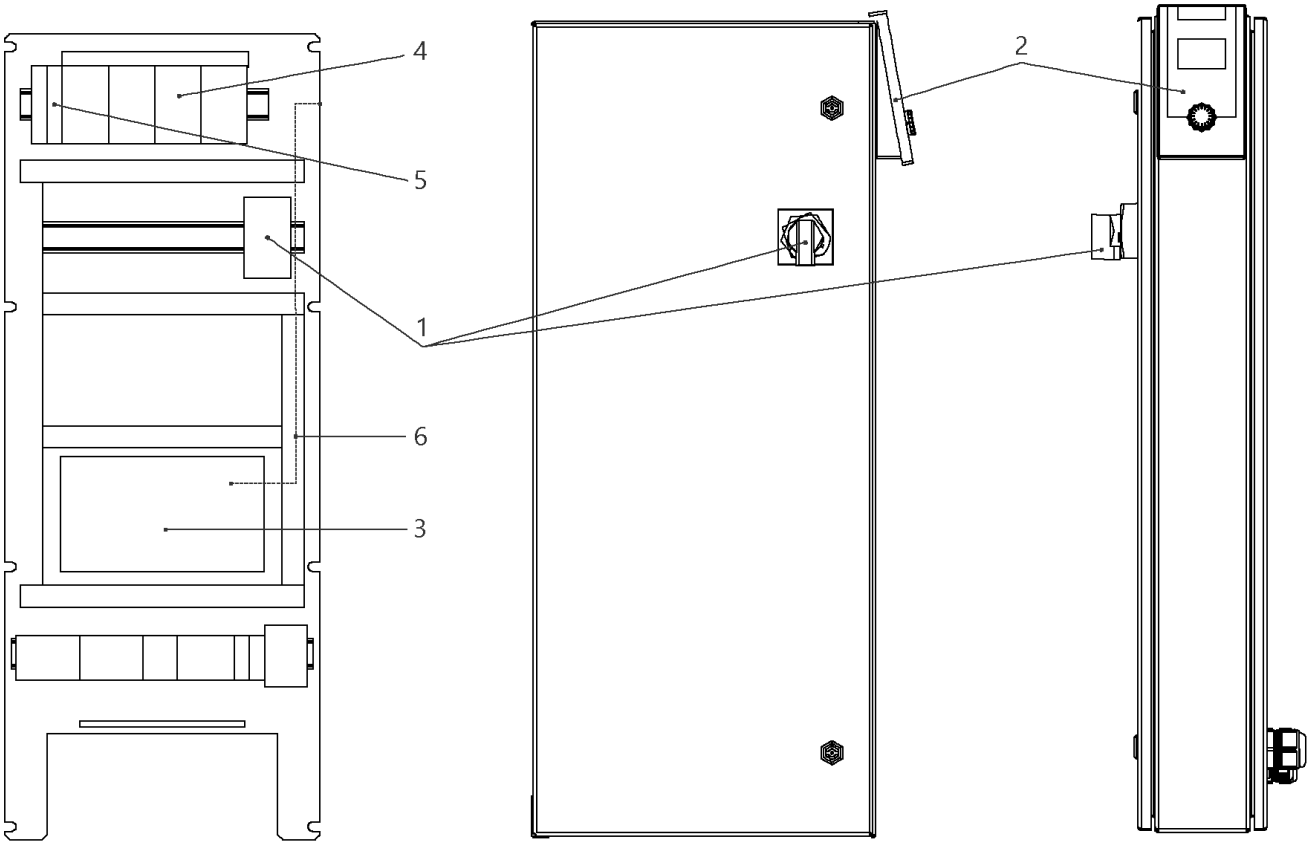
4
5
1
6
3
2

## W-CTRL-SCE-B-2x4,0KW-T4-FM-ND2

| Item | Article no. | Description | Quantity |
|---|---|---|---|
| 1 | 2104470 | MAIN SWITCH OT40F3 L250 KIT | 1 |
| 2 | 4184784 | CONTROL PANEL HMI SC KIT | 1 |
| 2 | 4185259 | ASSEMBLY DISPLAY SC PKG VP. | 1 |
| 3 | 4185257 | ASSEMBLY CPU SCe Booster VP. | 1 |
| 4 | 2051217 | AUTOM.CIRCUIT BREAKER S203 B16 TO7,5kW | 1 |
| 5 | 2046288 | CIRCUIT BREAKER S201 B16 | 1 |
| 6 | 4194956 | PATCH CABLE RJ45 CAT6 1,0M BLUE SC-PANEL | 1 |

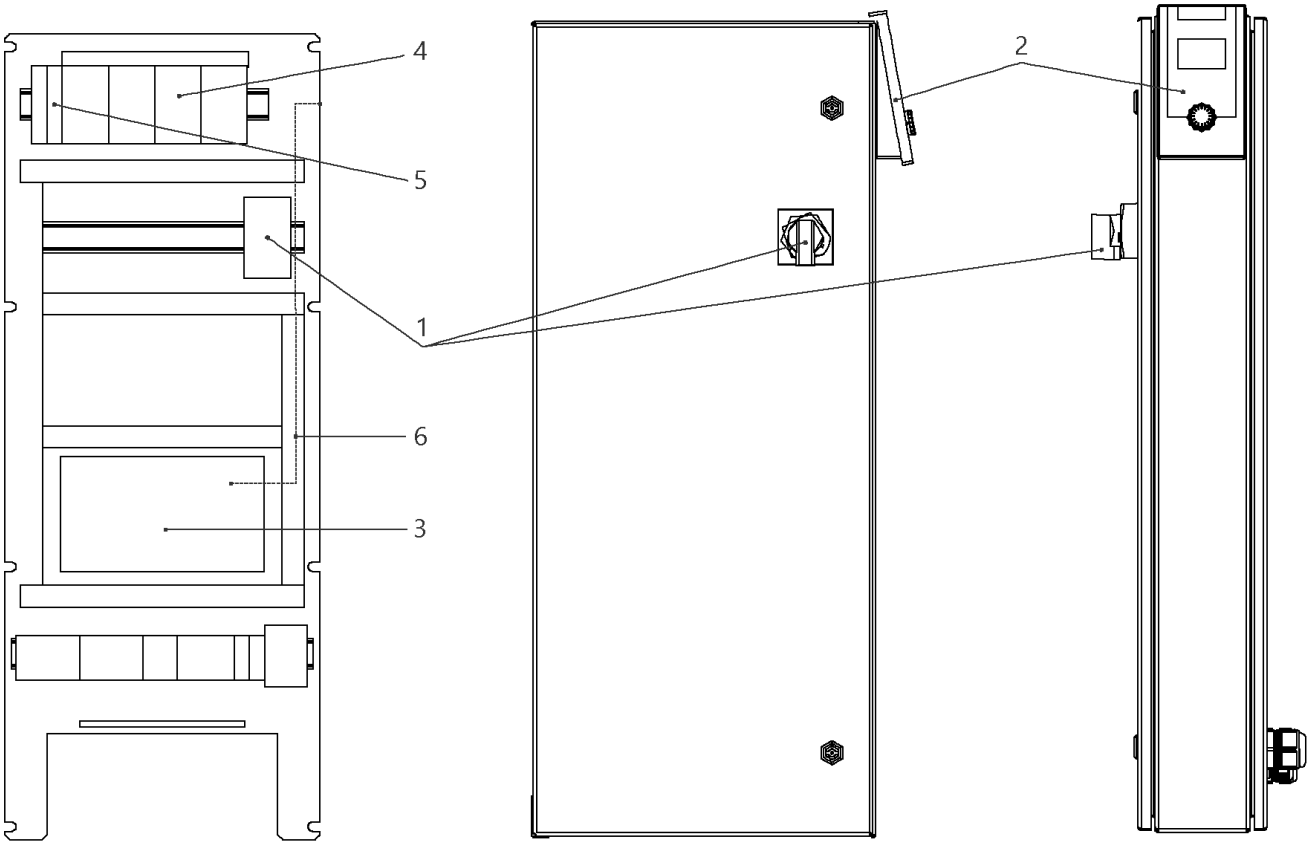
4
5
1
6
3
2

## W-CTRL-SCE-B-2x13A-T34-FM-ND2-AVC-PKG (2541905)

| Item | Article no. | Description | Quantity |
|---|---|---|---|
| 1 | 2104473 | MAIN SWITCH OT63F3 L105 KIT | 1 |
| Note: TO / BIS / JUSQU'AU 30/06/2015 | | | |
| 1 | 2104470 | MAIN SWITCH OT40F3 L250 KIT | 1 |
| Note: FROM / AB / À PARTIR DU 01/07/2015 | | | |
| 2 | 4184784 | CONTROL PANEL HMI SC KIT | 1 |
| 2 | 4185259 | ASSEMBLY DISPLAY SC PKG VP. | 1 |
| Note: DISPLAY ALONE / PLATINE SEULE | | | |
| 3 | 4185257 | ASSEMBLY CPU SCe Booster VP. | 1 |
| 4 | 2051217 | AUTOM.CIRCUIT BREAKER S203 B16 TO7,5kW | 1 |
| 5 | 2046288 | CIRCUIT BREAKER S201 B16 | 1 |
| 6 | 4194956 | PATCH CABLE RJ45 CAT6 1,0M BLUE SC-PANEL | 1 |

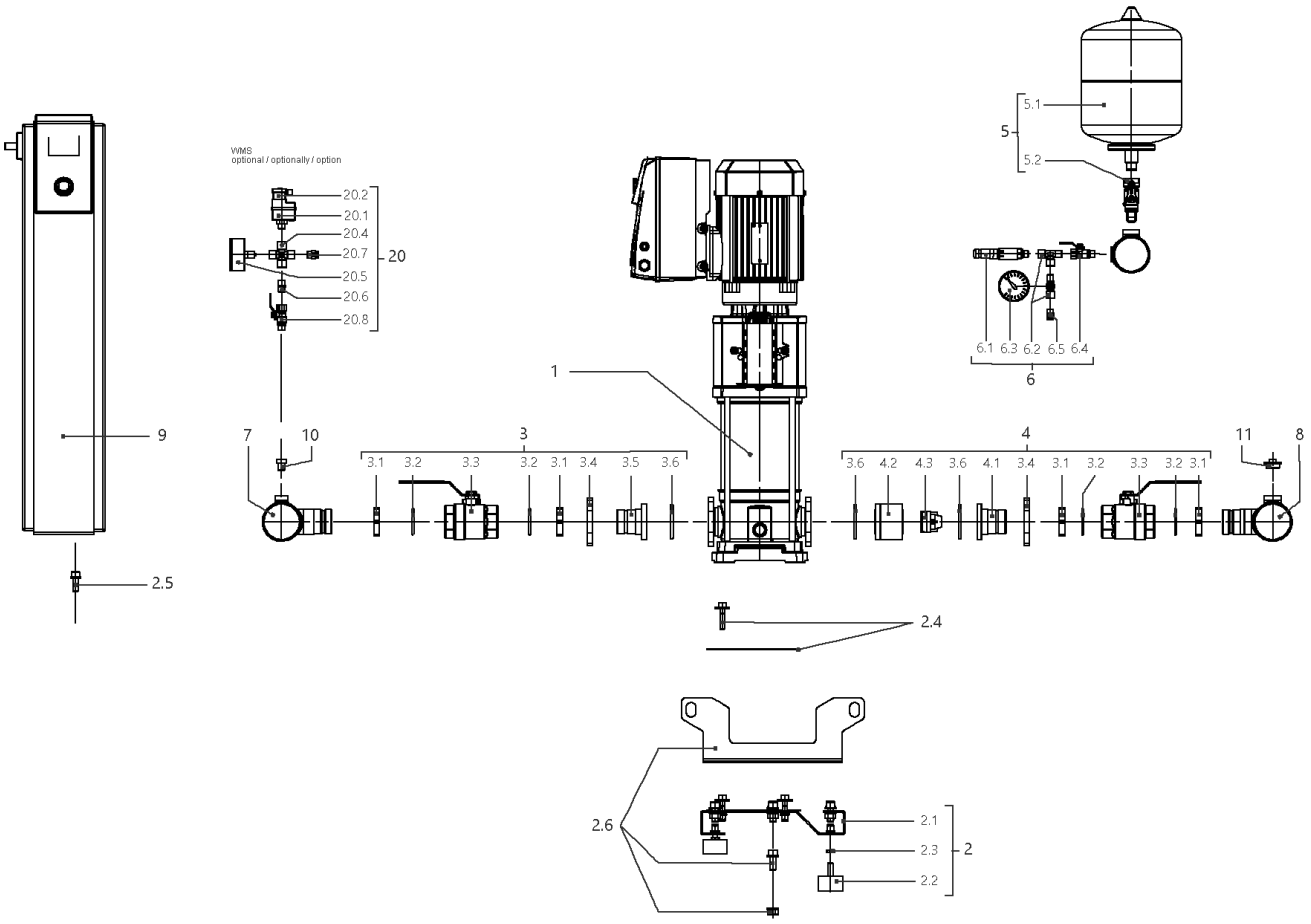
VVMS
optional / optionally / option
20.2
20.1
20.4
20.7
20.5
20.6
20.8
20
5.1
5
5.2
6.1 6.3 6.2 6.5 6.4
6
1
9
7
10
3
3.1 3.2 3.3 3.2 3.1 3.4 3.5 3.6
4
3.6 4.2 4.3 3.6 4.1 3.4 3.1 3.2 3.3 3.2 3.1
11
8
2.5
2.4
2.6
2.1
2.3
2.2
2

| Item | Article no. | Description | Quantity |
|---|---|---|---|
| 1 | | HELIX VE1002-1/16/E/S | 1 |
| Note: TO / BIS / JUSQU'AU 31/03/2016 | | | |
| 1 | 4201547 | HELIX VE1002-1/16/E/S | 1 |
| Note: FROM / AB / À PARTIR DU 01/04/2016 | | | |
| 2 | 4197125 | BASE PLATE DE2 850x420 KIT | 1 |
| Note: TO / BIS / JUSQU'AU 28/02/2013 | | | |
| 2.1 | | > BASEPLATE_2x4/6/10/16V_E300_BOX_150 | 1 |
| 2.2 | 2028654 | > VIBRATION DAMPER D.50X30 M10X28 | 1 |
| 2.3 | 2028281 | > NUT M10 DIN936 (ISO4035) 17H VZ | 1 |
| 2.4 | 4197083 | > HOLDER PUMP Helix 10/16 KIT | 1 |
| 2.5 | 4197084 | > HOLDER SWITCHBOX WILO Smart Control KIT | 1 |
| 2.6 | 4197117 | > LIFTING Siboost HELIX SC KIT | 1 |
| 2 | 4199874 | BASE PLATE DE2 850x300 M10 KIT | 1 |
| Note: FROM / AB / À PARTIR DU 01/03/2013 - TO / BIS / JUSQU'AU 06/02/2014 | | | |
| 2.1 | | > BASEPLATE_2x4/6/10V_E300_850x300_BOX_150 | 1 |
| 2.2 | 2028654 | > VIBRATION DAMPER D.50X30 M10X28 | 1 |
| 2.3 | 2028281 | > NUT M10 DIN936 (ISO4035) 17H VZ | 1 |
| 2.4 | 4199875 | > HOLDER PUMP Siboost Helix V2/4 KIT | 1 |
| 2.5 | 4197084 | > HOLDER SWITCHBOX WILO Smart Control KIT | 1 |
| 2.6 | 4197085 | > LIFTING Siboost HELIX SC KIT | 1 |
| 2 | 4197122 | BASE PLATE DE2 850x300 M10 KIT | 1 |
| Note: FROM / AB / À PARTIR DU 07/02/2014 | | | |
| 2.1 | | > BASEPLATE_2x4/6/10V_E300_850x300_BOX_150 | 1 |
| 2.2 | 2028654 | > VIBRATION DAMPER D.50X30 M10X28 | 1 |
| 2.3 | 2028281 | > NUT M10 DIN936 (ISO4035) 17H VZ | 1 |
| 2.4 | 4197083 | > HOLDER PUMP Helix 10/16 KIT | 1 |
| 2.5 | 4197084 | > HOLDER SWITCHBOX WILO Smart Control KIT | 1 |
| 2.6 | 4197085 | > LIFTING Siboost HELIX SC KIT | 1 |
| 3 | 4197072 | SUCTION SIDE Siboost Helix10/16 KIT | 1 |
| 3.1 | 2032623 | > NUT G1 1/2"SW55 MS | 1 |
| 3.2 | 2032616 | > O-RING ID.44X3,53N DIN3771 E7502 | 1 |
| 3.2 | 2534877 | > BALL TAP KDW40-H G11/2I-I-DN40 DVGW | 1 |
| 3.4 | 2032626 | > OVAL FLANGE D52-LK100 ST-VZ | 1 |
| 3.5 | 2032627 | > UNION INSERT DN40 LAPPED FLANGE | 1 |

| Item | Article no. | Description | Quantity |
|---|---|---|---|
| 3.6 | 2032628 | > O-RING ID.56,52X5,33N DIN3771 E7502 | 1 |
| 4 | 4197074 | DELIVERY SIDE Siboost Helix V10 KIT | 1 |
| 3.1 | 2032623 | > NUT G1 1/2"SW55 MS | 1 |
| 3.2 | 2032616 | > O-RING ID.44X3,53N DIN3771 E7502 | 1 |
| 3.3 | 2534877 | > BALL TAP KDW40-H G11/2I-I-DN40 DVGW | 1 |
| 3.4 | 2032626 | > OVAL FLANGE D52-LK100 ST-VZ | 1 |
| 4.1 | 2054316 | > UNION INSERT DN40 LAPPED FLANGE(W.SLOT) | 1 |
| 4.2 | 2054317 | > HOUSING F.NON RETURN VALVE(RV-IN) DN40 | 1 |
| 4.3 | 2032631 | > NON-RETURN-DEVICE DN40 (MTR)TYP RV-IN | 1 |
| 3.6 | 2032628 | > O-RING ID.56,52X5,33N DIN3771 E7502 | 1 |
| 5 | 2032642 | DIAPHREM TANK 8L/PN16 DIN4807/T5 KIT | 1 |
| 5.1 | 2045914 | > DIAPHREM TANK 8L TYP-DD 16BAR | 1 |
| 5.2 | 2027853 | > FLOW FITTING G3/4 FOR DIAPHRAGM VES. | 1 |
| 6 | 4197076 | PRESSURE SENSOR/ GAUGE 0-16BAR KIT | 1 |
| 6.1 | 2085909 | > PRESS.SENSOR 1/4" 0-16BAR 4-20MA VP. | 1 |
| 6.2 | 4197077 | > T-PIECE 1/4" VP. | 1 |
| 6.3 | 2028692 | > PRESSURE GAUGE NG63-PN16-G1/4 | 1 |
| 6.4 | 2028291 | > BALL TAP R1/4" PN42 GIACOMINI R254DL | 1 |
| 6.5 | 2028691 | > BLOWGUN 1/4" MS 30BAR VP. | 1 |
| 7 | 4197123 | PIPE DE2 R21/2''-2x11/2"+1x1/4x600 VP. | 1 |
| 8 | 4197124 | PIPE DE2 R21/2''-2x11/2"+1x1/4+1x3/4x600 | 1 |
| 9 | | W-CTRL-SCE-B-2x1,1KW-T4-FM-ND2 | 1 |
| Note: TO / BIS / JUSQU'AU 28/02/201 | | | |
| 9 | | W-CTRL-SCE-B-2x0,55-1,5KW-T4-FM-ND1 | 1 |
| Note: FROM / AB / À PARTIR DU 01/03/2013 - TO / BIS / JUSQU'AU 18/05/2014 | | | |
| 9 | 2541913 | W-CTRL-SCE-B-2x10A-T34-FM-ND1-AVC-PKG | 1 |
| Note: FROM / AB / À PARTIR DU 19/05/2014 | | | |
| 10 | 4197079 | PLUG G1/4"x10 AISI304 KIT | 1 |
| 11 | 2032654 | PLUG R3/4" MS VIEGA 1751 | 1 |
| 20 | 2521150 | ASSEMBLY WMS. DE-EB. +VP | 1 |
| 20.1 | 2028652 | > PRESSURE SWITCH PS3-ASR 1/(1,3) VP. | 1 |
| 20.2 | 2130983 | > PLUG PS3-415 WITH KABEL 1,5M 2NO VP. | 1 |
| 20.4 | 2028290 | > CROSSPIECE R1/4" MS-NICKEL | 1 |
| 20.5 | 2028687 | > PRESSURE GAUGE NG63 R1/4" HI.0-6BAR | 1 |

| Item | Article no. | Description | Quantity |
|---|---|---|---|
| 20.6 | 2054268 | > DUAL NIPPLE G1/4" x G1/4" MS VP. | 1 |
| 20.7 | 2028691 | > BLOWGUN 1/4" MS 30BAR VP. | 1 |
| 20.8 | 2028291 | > BALL TAP R1/4" PN42 GIACOMINI R254DL | 1 |

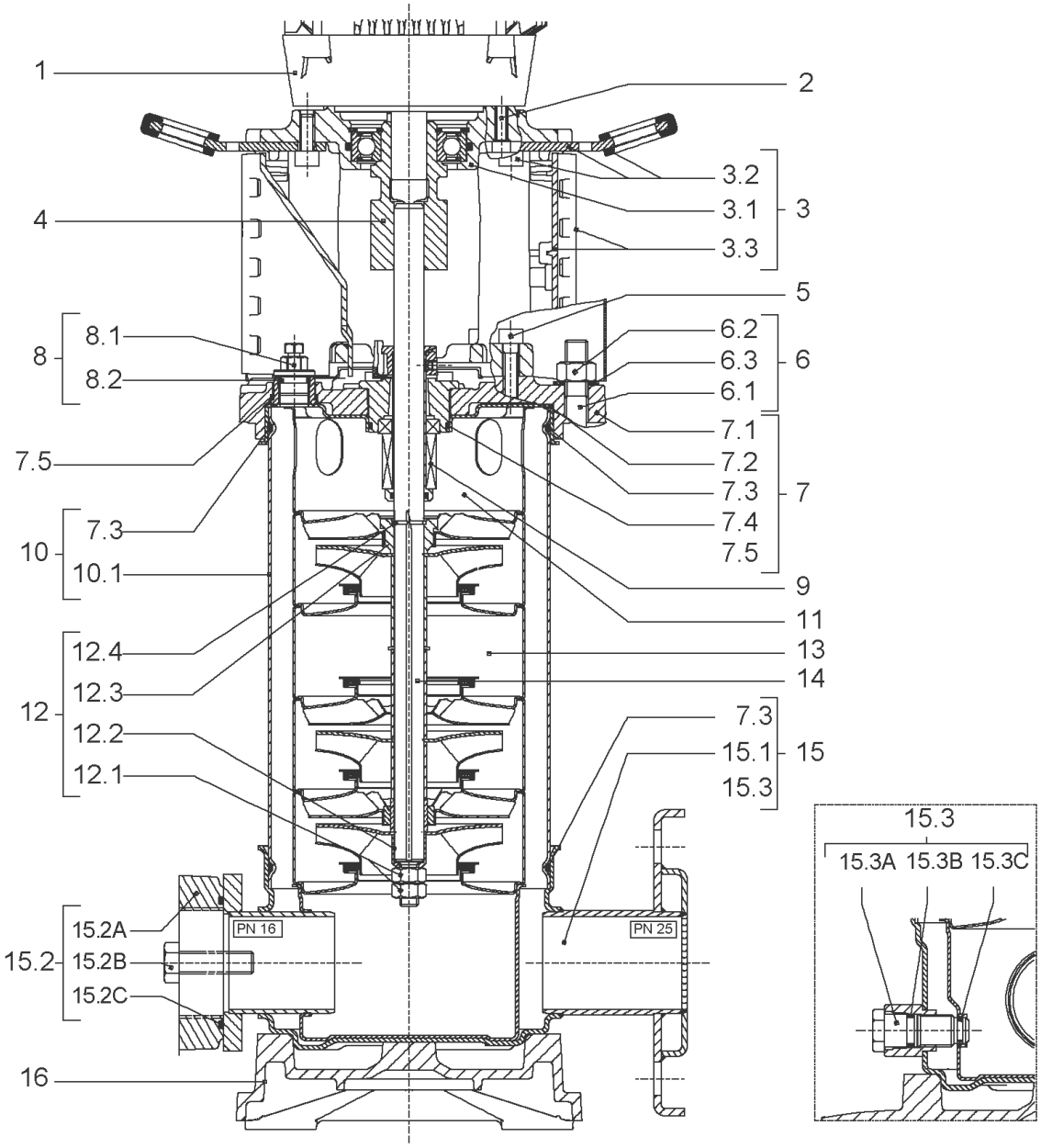
1
2
3.2
3.1
3
3.3
4
5
8.1
8
8.2
6.2
6.3
6
6.1
7.1
7.5
7.2
7.3
7
7.4
7.3
10
7.5
10.1
9
11
12.4
13
12.3
14
12
12.2
7.3
15.1
15
12.1
15.3
15.3
15.3A 15.3B 15.3C
15.2A
PN 16
PN 25
15.2
15.2B
15.2C
16

| Item | Article no. | Description | Quantity |
|---|---|---|---|
| 1 | | DRIVE HELIX-VE1002-IE2-WE KIT | 1 |
| Note: MOTOR BRAND WILO ELEC | | | |
| 1 | | DRIVE HELIX-VE1002-IE2-ATB KIT | 1 |
| Note: MOTOR BRAND ATB | | | |
| 1 | | DRIVE HELIX-VE1002-IE4-WE KIT | 1 |
| Note: MOTOR BRAND WILO ELEC | | | |
| 2 | 4159702 | SCREW M6X30 (4 PIECES) | 1 |
| 3 | 4172790 | EQUIPED LANTERN NEXIS FT 100 KIT | 1 |
| 3.1 | | > M+5_6_LANTERN_ONE-PIECE_FT100_CATA | 1 |
| 3.2 | 2127604 | > EYELET CPL.FT HELIX(2 PIECES) | 1 |
| 3.3 | 4159692 | > COUPLING PROTECTOR FT HELIX KIT | 1 |
| 4 | 4159708 | COUPLING D.16XD.19 FT100 HELIX KIT | 1 |
| 5 | 4159707 | SCREW M8X30 (4 PIECES) | 1 |
| 6 | 4177803 | STUD BOLT M12X263 KIT | 1 |
| 6.1 | | > TIE BOLT M12-263x18x30-1.4057 | 1 |
| 6.2 | 2094647 | > NUT M12 M12 ISO4032 VP. | 1 |
| 6.3 | 2123557 | > WASHER CS-12.4-24-1.6-NFE25 (4 PIECES) | 1 |
| 7 | 4210143 | STATIONARY RING HOLDER HELIX 6" EPDM | 1 |
| 7.2 | 2127607 | > STATIONARY RING HOLDER 6" HELIX 1.4301 V | 1 |
| 7.3 | 4176513 | > O-RING FOR PUMP JACKET VP. | 1 |
| 7.4 | 2127603 | > O-RING ID.37,6x2,4 EPDM VP. | 1 |
| 7.5 | 2127602 | > O-RING ID.21,35x2 EPDM VP. | 1 |
| 8 | 4159686 | FILING/PURGING PLUG HELIX EPDM KIT | 1 |
| 9 | 4171327 | SEAL-KIT-HELIX6-10-16 O/E KIT | 1 |
| 10 | 4177804 | HOUSING PIPES D.152X134 1.4301 KIT | 1 |
| 7.3 | 4176513 | > O-RING FOR PUMP JACKET VP. | 1 |
| 10.1 | | > HOUSING-PIPE Ø152-M+1001/02-304 | 1 |
| 11 | 4172791 | CENTERING STAGE-RETURN HELIX10 1.4301VP. | 1 |
| 12 | 4209273 | SHAFT EQUIPMENT HELIX V10 KIT | 1 |
| 12.1 | | > NUT-H-M10-A4.70 | 1 |
| 12.2 | | > SERRATED LOCK WASHER M+10M3-316L | 1 |
| 12.3 | | > IMPELLER STOP RING L33,6-304 | 1 |
| 12.4 | | > STOP-RUSH-1/2-D16xd2-M+316 | 1 |
| 13 | | HYDRAULIC HELIX V 1002 1.4307 | 1 |

| Item | Article no. | Description | Quantity |
|---|---|---|---|
| 14 | 4177807 | SHAFT D.16X255 1.4301 VP. | 1 |
| 15 | 4159682 | PUMP HOUSING HELIX DN50 PN16 1.4301 KIT | 1 |
| 7.3 | 4176513 | > O-RING FOR PUMP JACKET VP. | 1 |
| 15.1 | | > BLASTING PPE HOUSING V-PN16-DN50-304 | 1 |
| 15.2 | 4217893 | > COUNTER FLANGE-G1"1/2-PN16-GJL KIT | 1 |
| 15.3 | 4171321 | > PRIMING/DRAIN PLUG EPDM HELIX KIT | 1 |
| 16 | 4176517 | BASEPLATE V8/10 VP. | 1 |

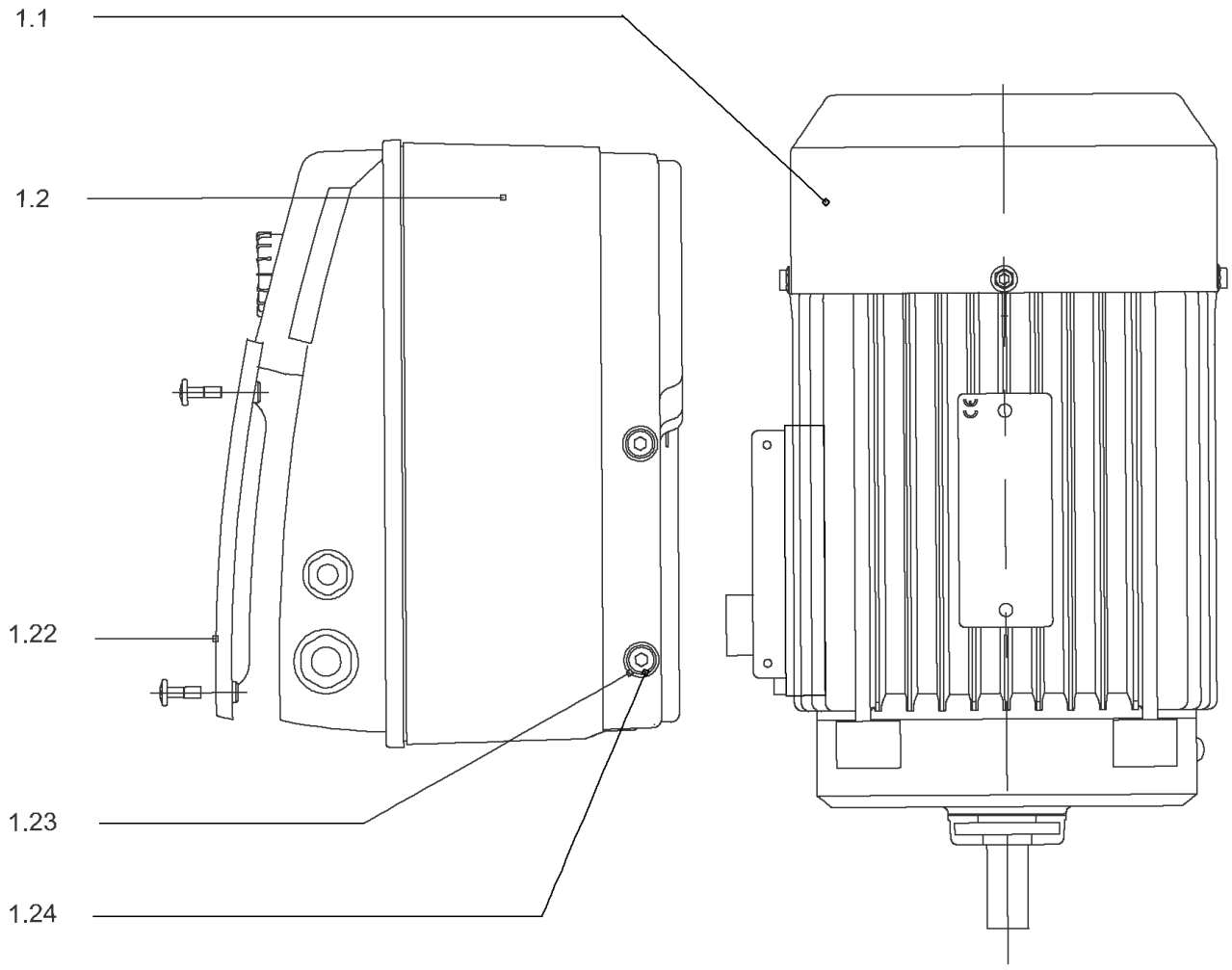
1.1
1.2
1.22
1.23
1.24

## DRIVE HELIX-VE1002-IE2-WE KIT

| Item | Article no. | Description | Quantity |
|---|---|---|---|
| 1.1 | 4184817 | MOTOR 1,1/2/80 3~ 380V 60HZ IE2 WE VP. | 1 |
| | | SPARE PARTS MOTOR:ON REQUEST | 1 |
| 1.2 | 4186942 | MODULE HELIX-VE1002-IE2-WE KIT | 1 |
| 1.22 | 2054372 | > MODULE COVER TL1,TL2+GASKET KIT | 1 |
| 1.23 | 4215716 | > SCREW M5X16 DIN912 8.8 A2A (4pieces) VP. | 1 |
| 1.24 | 2057978 | > RONDELLE A5,3 DIN6797 FST ZN (4 PIECES) | 1 |

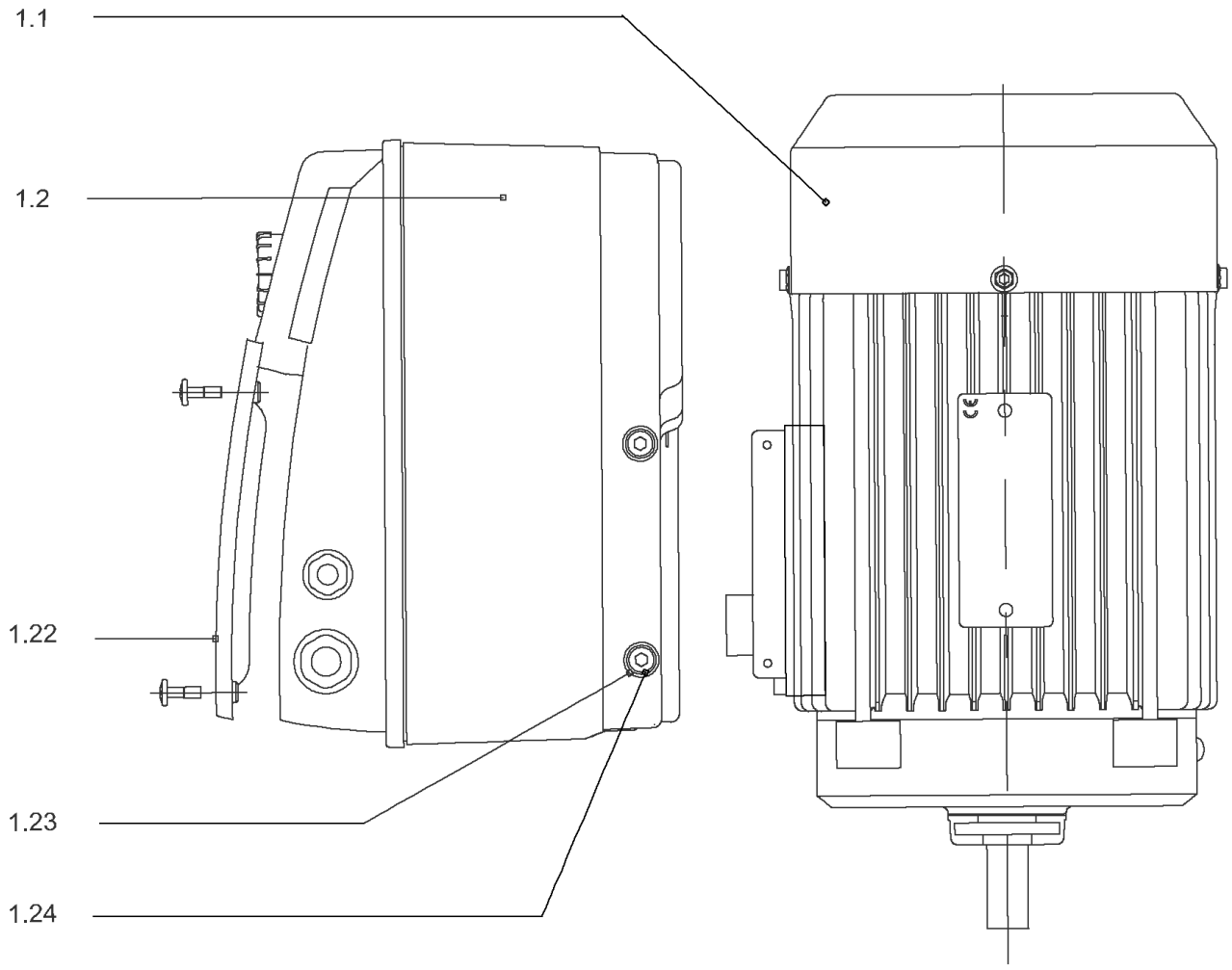
1.1
1.2
1.22
1.23
1.24

## DRIVE HELIX-VE1002-IE2-ATB KIT

| Item | Article no. | Description | Quantity |
|---|---|---|---|
| 1.1 | | M1,1-2T638P55V18-80F10-SU-N19-ADAPT-IE2 | 1 |
| Note: no longer available/nicht mehrlieferbar/n'est plus disponible | | | |
| | | SPARE PARTS MOTOR:ON REQUEST | 1 |
| 1.2 | 4228815 | MODULE HELIX-VE1002-IE2-ATB KIT | 1 |
| 1.22 | 2054372 | > MODULE COVER TL1,TL2+GASKET KIT | 1 |
| 1.23 | 4215716 | > SCREW M5X16 DIN912 8.8 A2A (4pieces) VP. | 1 |
| 1.24 | 2057978 | > RONDELLE A5,3 DIN6797 FST ZN (4 PIECES) | 1 |

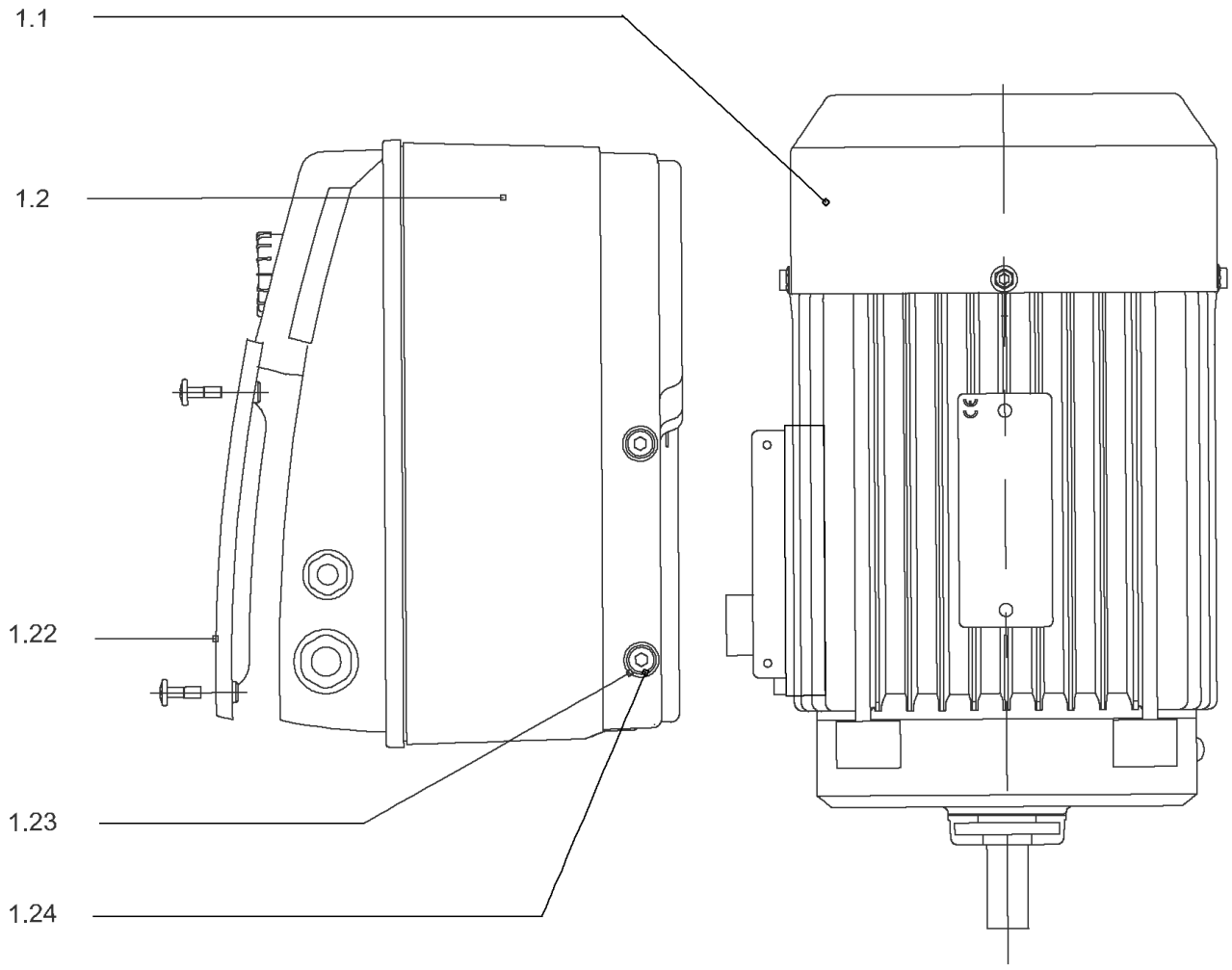
1.1
1.2
1.22
1.23
1.24

## DRIVE HELIX-VE1002-IE4-WE KIT

| Item | Article no. | Description | Quantity |
|---|---|---|---|
| 1.1 | 4207916 | MOTOR 1.1/2/80 3~ 380V 60HZ IE4 WE VP. | 1 |
| | | SPARE PARTS MOTOR:ON REQUEST | 1 |
| 1.2 | 4209600 | MODULE HELIX-VE1002-IE4-WE KIT | 1 |
| 1.22 | 2054372 | > MODULE COVER TL1,TL2+GASKET KIT | 1 |
| 1.23 | 4215716 | > SCREW M5X16 DIN912 8.8 A2A (4pieces) VP. | 1 |
| 1.24 | 2057978 | > RONDELLE A5,3 DIN6797 FST ZN (4 PIECES) | 1 |

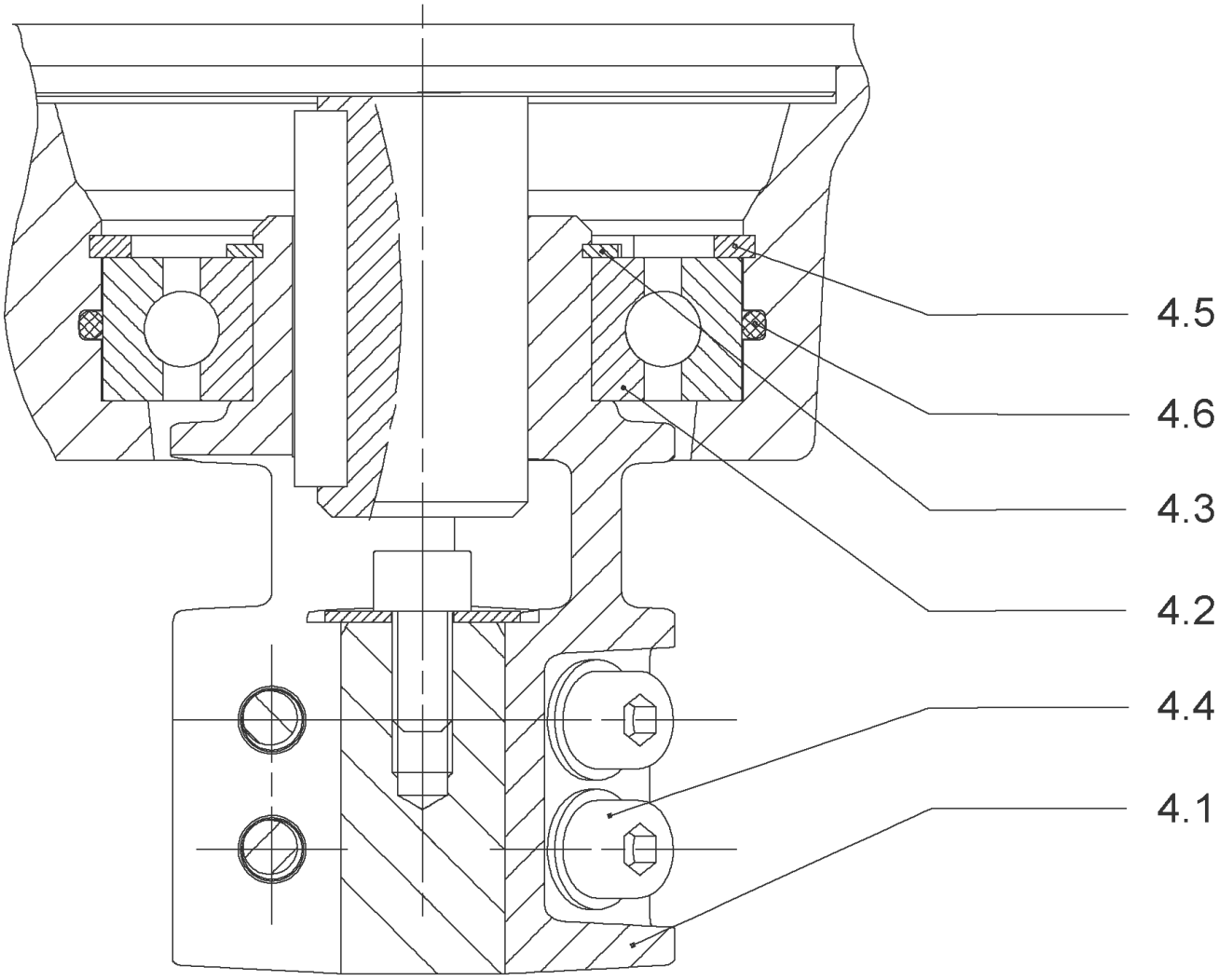
4.5
4.6
4.3
4.2
4.4
4.1

## COUPLING D.16XD.19 FT100 HELIX KIT (4159708)

| Item | Article no. | Description | Quantity |
|---|---|---|---|
| 4.1 | | COUPLING M+ Ø16XØ19 FT100 MACHINED | 1 |
| 4.2 | 2130977 | BALL BEARING 6206/ZZ-C3(HT)VP. | 1 |
| 4.3 | 4234249 | CIRCLIP-FOR-SHAFT-D30x1.5 VP. | 1 |
| 4.4 | 4212716 | SCREW M6X20 KIT (4PIECES) | 1 |
| 4.5 | 4234250 | CIRCLIP-D62x2 VP. | 1 |
| 4.6 | 4234245 | O-RING 63X3 VP. | 1 |
| | | CONTACT-WASHER-6ETR-6,1x12,2x1,8-STEEL | 1 |

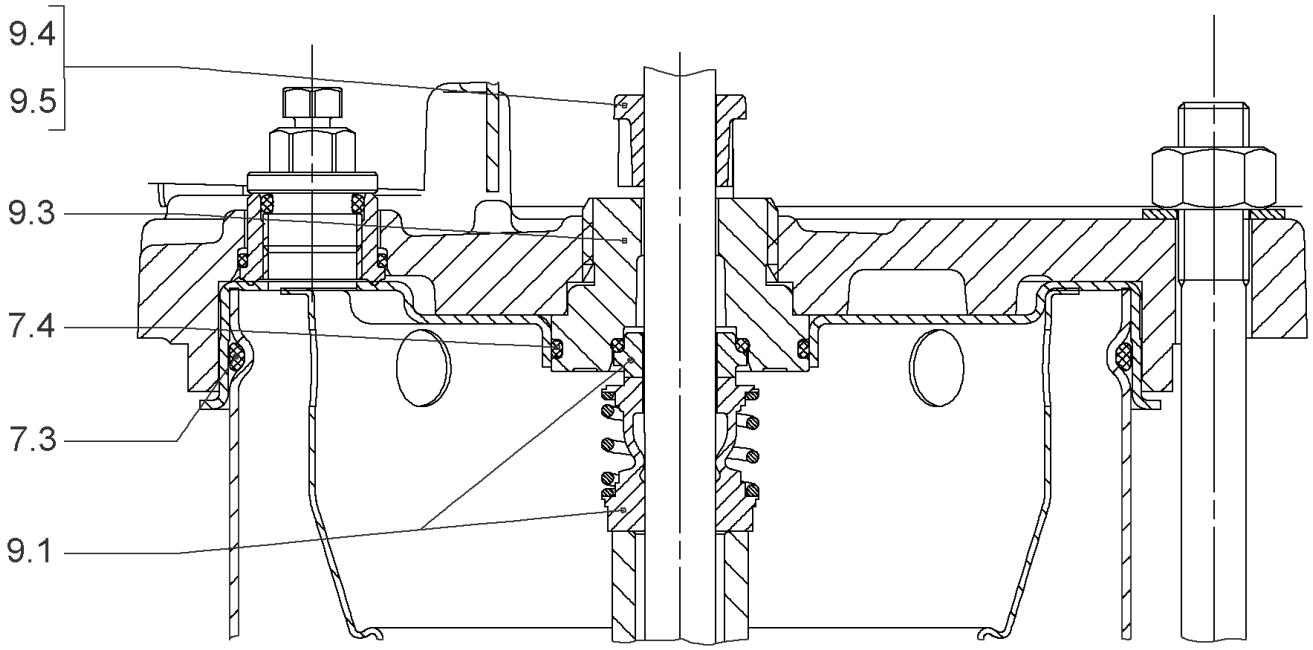
9.4
9.5
9.3
7.4
7.3
9.1

## SEAL-KIT-HELIX6-10-16 O/E KIT (4171327)

| Item | Article no. | Description | Quantity |
|---|---|---|---|
| 7.3 | 4176513 | O-RING FOR PUMP JACKET VP. | 1 |
| 7.4 | 2127603 | O-RING ID.37,6x2,4 EPDM VP. | 1 |
| 9.1 | 4177801 | MECH.SEAL HELIX6-10-16 O/E VP. | 1 |
| 9.3 | 4177798 | MACHINED RING HOLDER M+6" Ø16 304 VP. | 1 |
| 9.5 | 4177799 | MACHINED DRIVE RING Ø16 VP. | 1 |
| 9.4 | 4176520 | SCREW CH M5x5 A4-70 ( 3PIECES ) | 1 |

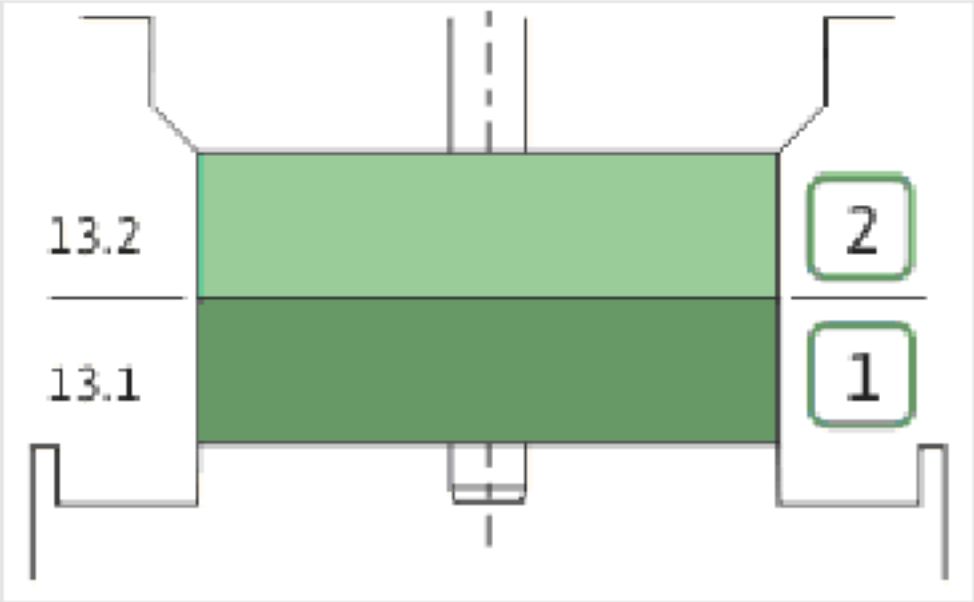
13.2
13.1
2
1

| Item | Article no. | Description | Quantity |
|---|---|---|---|
| 13.1 | 4171331 | STAGE HELIX10 1.4301KIT | 1 |
| | | > MACH.STG-CASING-WOGV-WNR-M+10-304 | 1 |
| | | > IMPELLER-M+10-304 | 1 |
| 13.2 | 4172792 | INTERMEDIATE STAGE HELIX 10 1.4301 KIT | 1 |
| | | > MACH.BEARING-STG-CASING-WNR-M+10-304 | 1 |
| | | > IMPELLER-M+10-304 | 1 |
| | | > SHAFT SLEEVE-SPACER-Ø19,35x18,465-304 | 1 |
| | | > SHAFT-SLEEVE-D16xD20x18-CW | 1 |

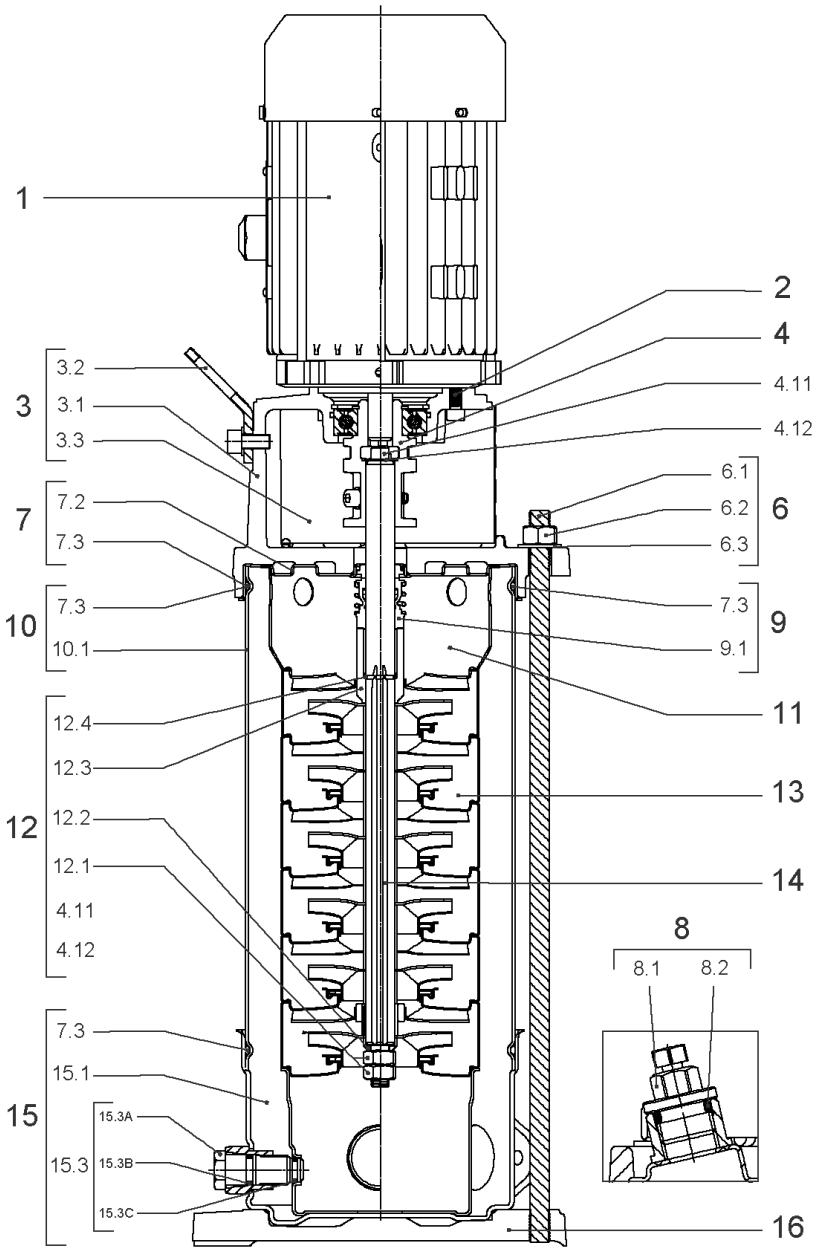
1
2
4
4.11
4.12
3
3.2
3.1
3.3
7
7.2
7.3
10
7.3
10.1
6
6.1
6.2
6.3
9
7.3
9.1
11
12
12.4
12.3
12.2
12.1
4.11
4.12
13
14
8
8.1
8.2
15
7.3
15.1
15.3
15.3A
15.3B
15.3C
16

## HELIX VE1002-1/16/E/S (4201547)

| Item | Article no. | Description | Quantity |
|---|---|---|---|
| 1 | | DRIVE HELIX-VE1002-IE4-WE KIT | 1 |
| Note: MOTOR BRAND WILO ELEC | | | |
| | | SPARE PARTS MOTOR:ON REQUEST | 1 |
| 2 | 4212716 | SCREW M6X20 KIT (4PIECES) | 1 |
| 3 | 4213752 | LANTERN FT100 HELIX KIT | 1 |
| 3.1 | | > LANT-MOT-VMI-ReDTC6"-FT100-MACHINED+CATA | 1 |
| 3.2 | 4184852 | > EYELET CPL.FT HELIX (2 PIECES) | 1 |
| 3.3 | 4213713 | > COUPLING PROTECTOR FT85/100 HELIX KIT | 1 |
| 4 | 4159708 | COUPLING D.16XD.19 FT100 HELIX KIT | 1 |
| 6 | 4177803 | STUD BOLT M12X263 KIT | 1 |
| 6.1 | | > TIE BOLT M12-263x18x30-1.4057 | 1 |
| 6.2 | 2094647 | > NUT M12 M12 ISO4032 VP. | 1 |
| 6.3 | 2123557 | > WASHER CS-12.4-24-1.6-NFE25 (4 PIECES) | 1 |
| 7 | 4214481 | STATIONARY RING HOLDER HELIX D27 ReDTC | 1 |
| 7.2 | 4214479 | > STATIONARY RING HOLDER HELIX D27 VP. | 1 |
| 7.3 | 4176513 | > O-RING FOR PUMP JACKET VP. | 1 |
| 8 | 4212724 | FILING/PURGING PLUG HELIX ReDTC KIT | 1 |
| 8.1 | | > FILLING PLUG MVI6"-304 | 1 |
| 8.2 | 4177800 | > O-RING EPDM PLUG HELIX VP. | 1 |
| 9 | 4214483 | MECH.SEAL HELIX6-10-16 O/E ReDTC KIT | 1 |
| 9.1 | 4177801 | > MECH.SEAL HELIX6-10-16 O/E VP. | 1 |
| 7.3 | 4176513 | > O-RING FOR PUMP JACKET VP. | 1 |
| 10 | 4177804 | HOUSING PIPES D.152X134 1.4301 KIT | 1 |
| 7.3 | 4176513 | > O-RING FOR PUMP JACKET VP. | 1 |
| 10.1 | | > HOUSING-PIPE Ø152-M+1001/02-304 | 1 |
| 11 | 4172791 | CENTERING STAGE-RETURN HELIX10 1.4301VP. | 1 |
| 12 | 4214517 | SHAFT EQUIPMENT HELIX V10 ReDTC KIT | 1 |
| 12.1 | | > NUT-H-M10-A4.70 | 1 |
| 12.2 | | > SERRATED LOCK WASHER M+10M3-316L | 1 |
| 12.3 | | > 1/2-SNAP-RING-6/10M3-316L | 1 |
| 12.4 | | > STOP-RUSH-1/2-D16xd2-M+316 | 1 |
| 4.11 | | > SCREW CHC-M6X14-8.8-ISO4762-GEOMET500A | 1 |
| 4.12 | | > WASHER D.24 L6U ZINK | 1 |
| 13 | | HYDRAULIC HELIX V 1002 1.4307 | 1 |

| Item | Article no. | Description | Quantity |
|---|---|---|---|
| 14 | 4214488 | SHAFT D.16X203 HELIX 1.4057 VP. | 1 |
| 15 | 4159682 | PUMP HOUSING HELIX DN50 PN16 1.4301 KIT | 1 |
| 7.3 | 4176513 | > O-RING FOR PUMP JACKET VP. | 1 |
| 15.1 | | > BLASTING PPE HOUSING V-PN16-DN50-304 | 1 |
| 15.2 | 4217893 | > COUNTER FLANGE-G1"1/2-PN16-GJL KIT | 1 |
| 15.3 | 4171321 | > PRIMING/DRAIN PLUG EPDM HELIX KIT | 1 |
| 16 | 4176517 | BASEPLATE V8/10 VP. | 1 |

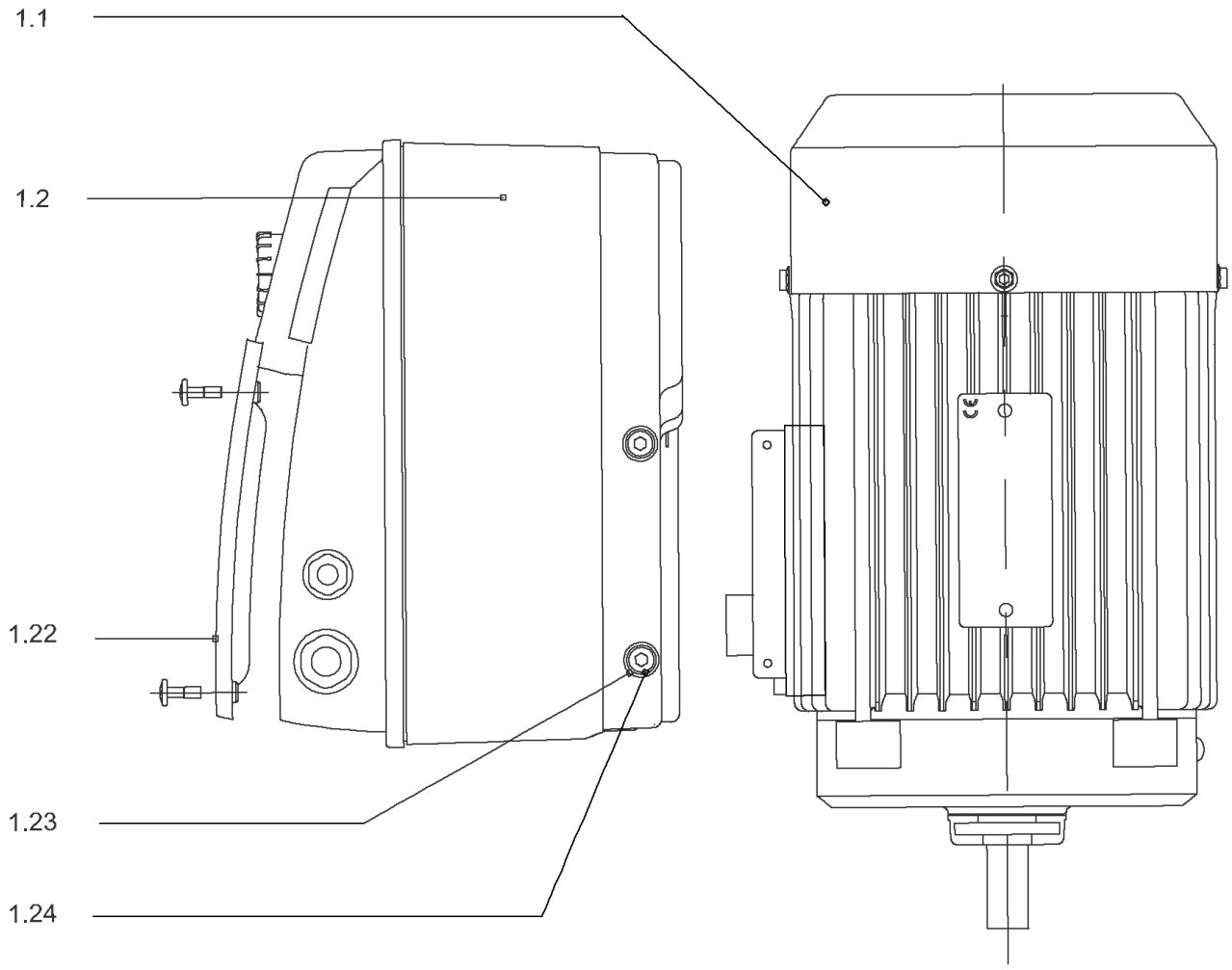
1.1
1.2
1.22
1.23
1.24

## DRIVE HELIX-VE1002-IE4-WE KIT

| Item | Article no. | Description | Quantity |
|---|---|---|---|
| 1.1 | 4207916 | MOTOR 1.1/2/80 3~ 380V 60HZ IE4 WE VP. | 1 |
| | | SPARE PARTS MOTOR:ON REQUEST | 1 |
| 1.2 | 4209600 | MODULE HELIX-VE1002-IE4-WE KIT | 1 |
| 1.22 | 2054372 | > MODULE COVER TL1,TL2+GASKET KIT | 1 |
| 1.23 | 4215716 | > SCREW M5X16 DIN912 8.8 A2A (4pieces) VP. | 1 |
| 1.24 | 2057978 | > RONDELLE A5,3 DIN6797 FST ZN (4 PIECES) | 1 |

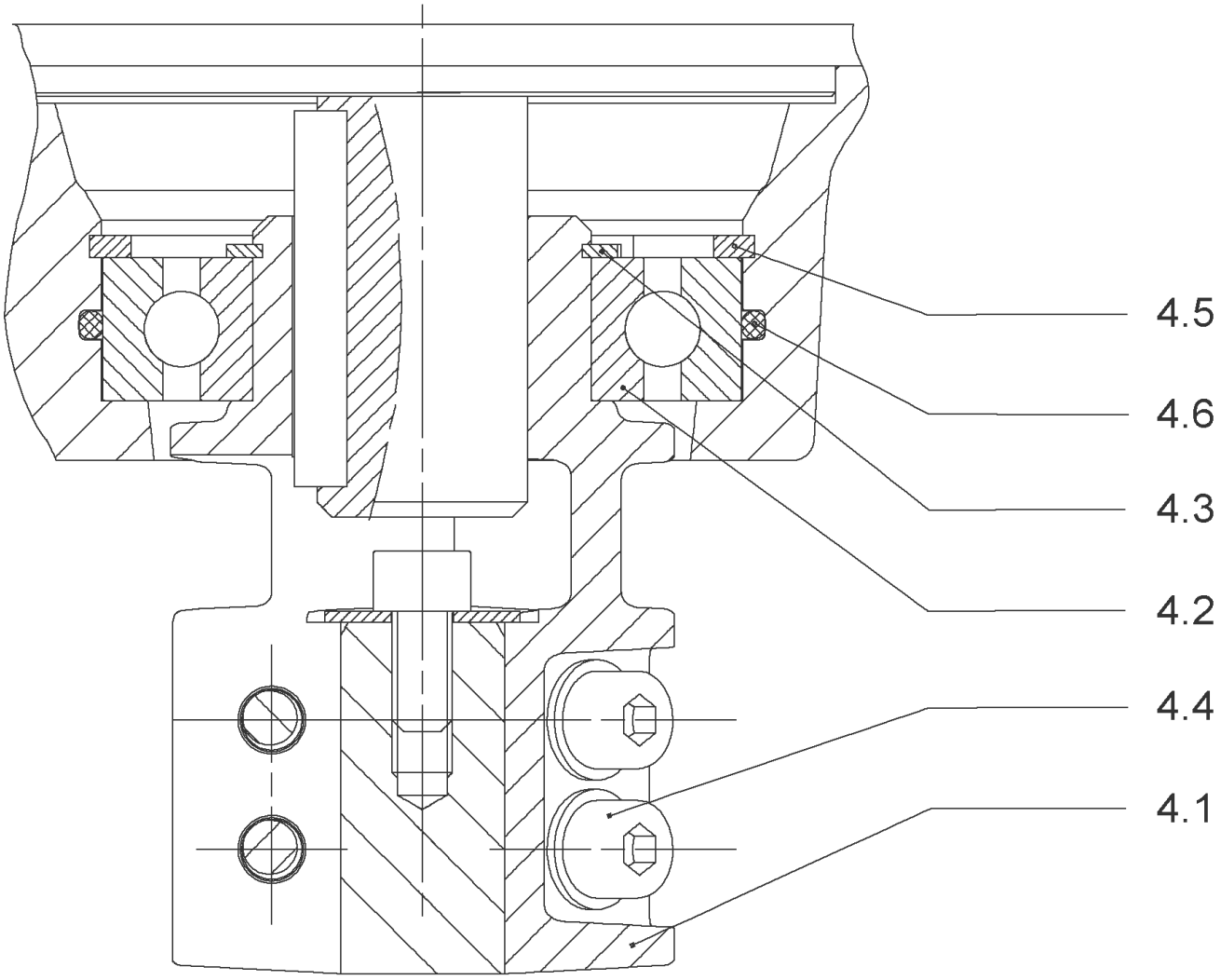
4.5
4.6
4.3
4.2
4.4
4.1

## COUPLING D.16XD.19 FT100 HELIX KIT (4159708)

| Item | Article no. | Description | Quantity |
|---|---|---|---|
| 4.1 | | COUPLING M+ Ø16XØ19 FT100 MACHINED | 1 |
| 4.2 | 2130977 | BALL BEARING 6206/ZZ-C3(HT)VP. | 1 |
| 4.3 | 4234249 | CIRCLIP-FOR-SHAFT-D30x1.5 VP. | 1 |
| 4.4 | 4212716 | SCREW M6X20 KIT (4PIECES) | 1 |
| 4.5 | 4234250 | CIRCLIP-D62x2 VP. | 1 |
| 4.6 | 4234245 | O-RING 63X3 VP. | 1 |
| | | CONTACT-WASHER-6ETR-6,1x12,2x1,8-STEEL | 1 |

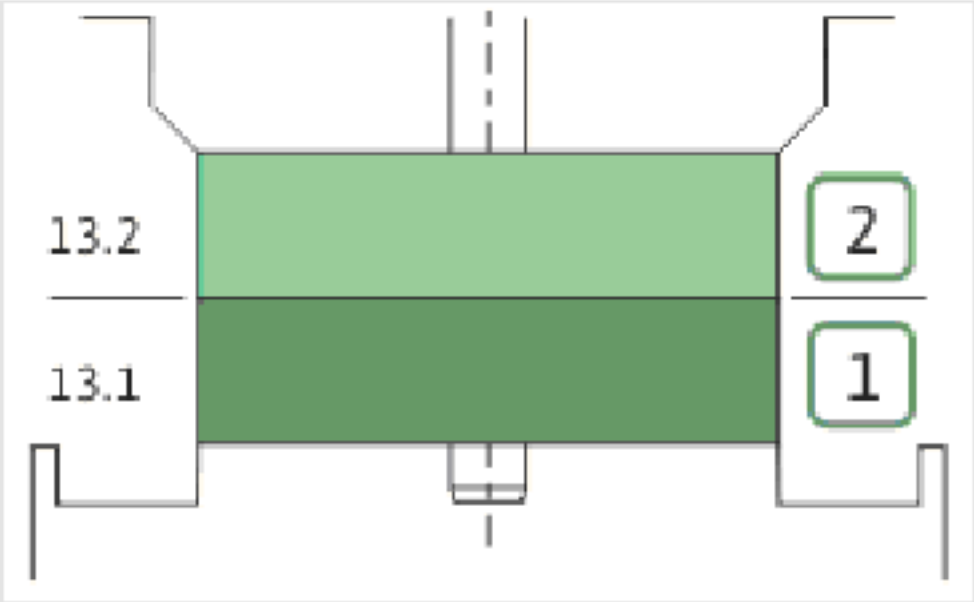
13.2
13.1
2
1

| Item | Article no. | Description | Quantity |
|---|---|---|---|
| 13.1 | 4171331 | STAGE HELIX10 1.4301KIT | 1 |
| | | > MACH.STG-CASING-WOGV-WNR-M+10-304 | 1 |
| | | > IMPELLER-M+10-304 | 1 |
| 13.2 | 4172792 | INTERMEDIATE STAGE HELIX 10 1.4301 KIT | 1 |
| | | > MACH.BEARING-STG-CASING-WNR-M+10-304 | 1 |
| | | > IMPELLER-M+10-304 | 1 |
| | | > SHAFT SLEEVE-SPACER-Ø19,35x18,465-304 | 1 |
| | | > SHAFT-SLEEVE-D16xD20x18-CW | 1 |

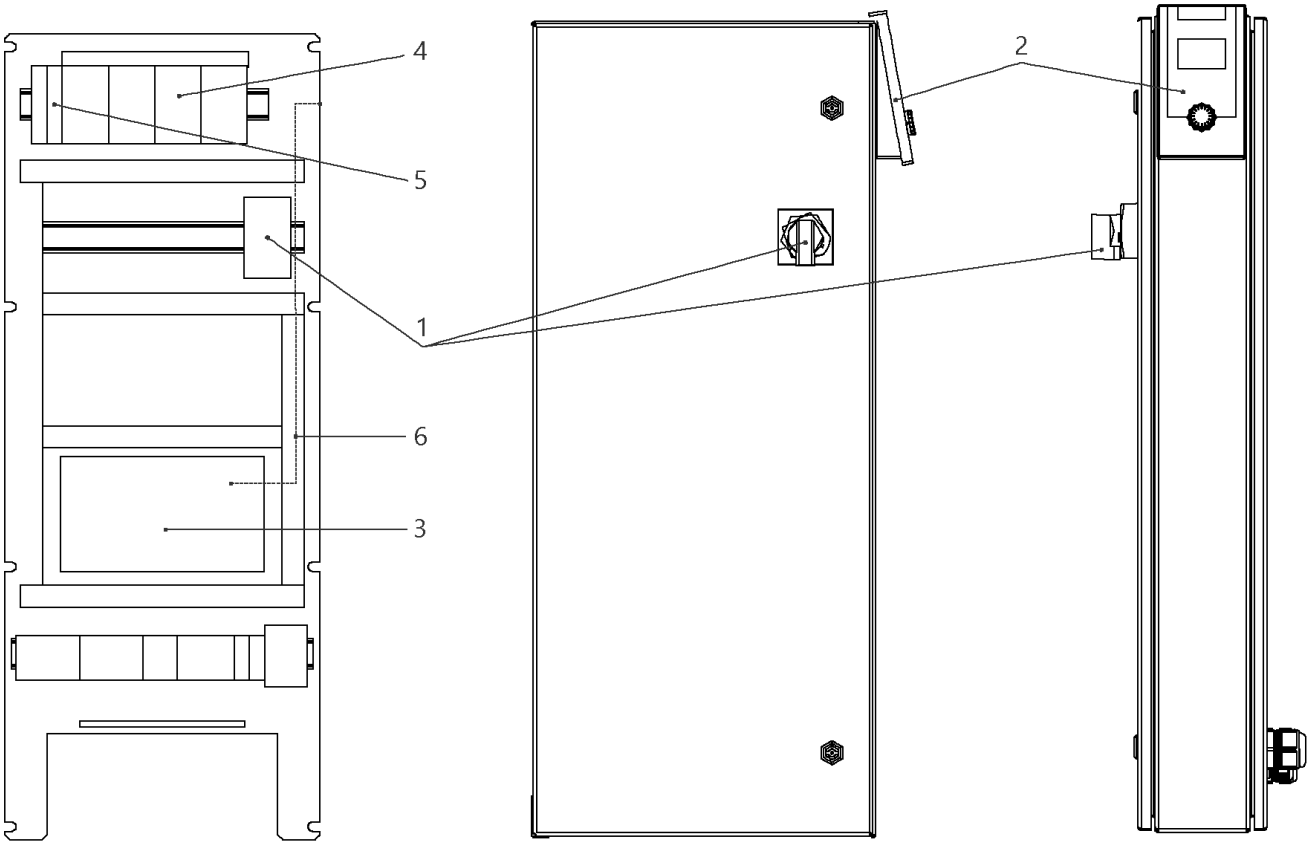
4
5
1
6
3
2

## W-CTRL-SCE-B-2x1,1KW-T4-FM-ND2

| Item | Article no. | Description | Quantity |
|---|---|---|---|
| 1 | 2104470 | MAIN SWITCH OT40F3 L250 KIT | 1 |
| 2 | 4184784 | CONTROL PANEL HMI SC KIT | 1 |
| 2 | 4185259 | ASSEMBLY DISPLAY SC PKG VP. | 1 |
| 3 | 4185257 | ASSEMBLY CPU SCe Booster VP. | 1 |
| 4 | 2051217 | AUTOM.CIRCUIT BREAKER S203 B16 TO7,5kW | 1 |
| 5 | 2046288 | CIRCUIT BREAKER S201 B16 | 1 |
| 6 | 4194956 | PATCH CABLE RJ45 CAT6 1,0M BLUE SC-PANEL | 1 |

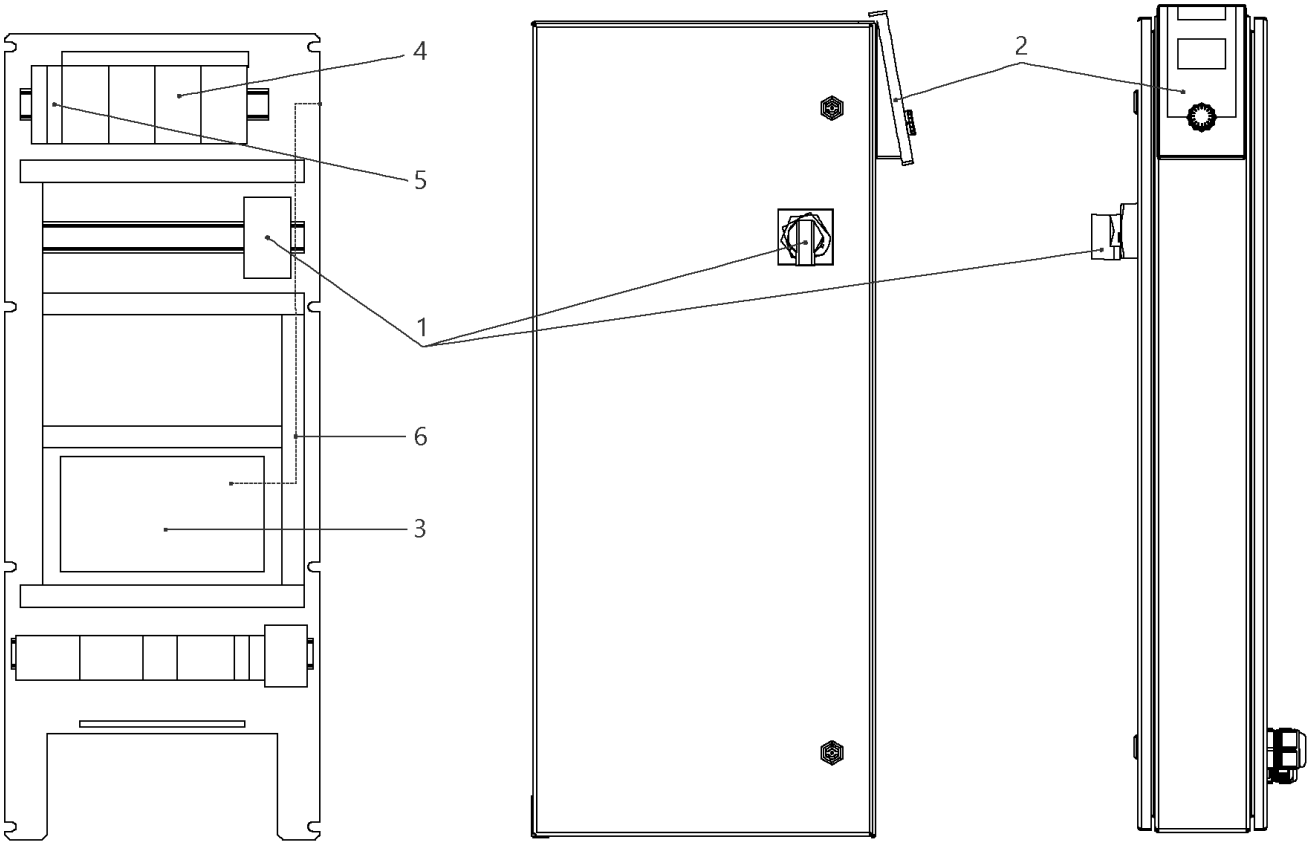
4
5
1
6
3
2

## W-CTRL-SCE-B-2x0,55-1,5KW-T4-FM-ND1

| Item | Article no. | Description | Quantity |
|---|---|---|---|
| 1 | 2104470 | MAIN SWITCH OT40F3 L250 KIT | 1 |
| 2 | 4184784 | CONTROL PANEL HMI SC KIT | 1 |
| 2 | 4185259 | ASSEMBLY DISPLAY SC PKG VP. | 1 |
| 3 | 4185257 | ASSEMBLY CPU SCe Booster VP. | 1 |
| 4 | 2051217 | AUTOM.CIRCUIT BREAKER S203 B16 TO7,5kW | 1 |
| 5 | 2046288 | CIRCUIT BREAKER S201 B16 | 1 |
| 6 | 4197081 | CABLE RJ45 CAT6 0,5M RED SC-PANEL VP. | 1 |

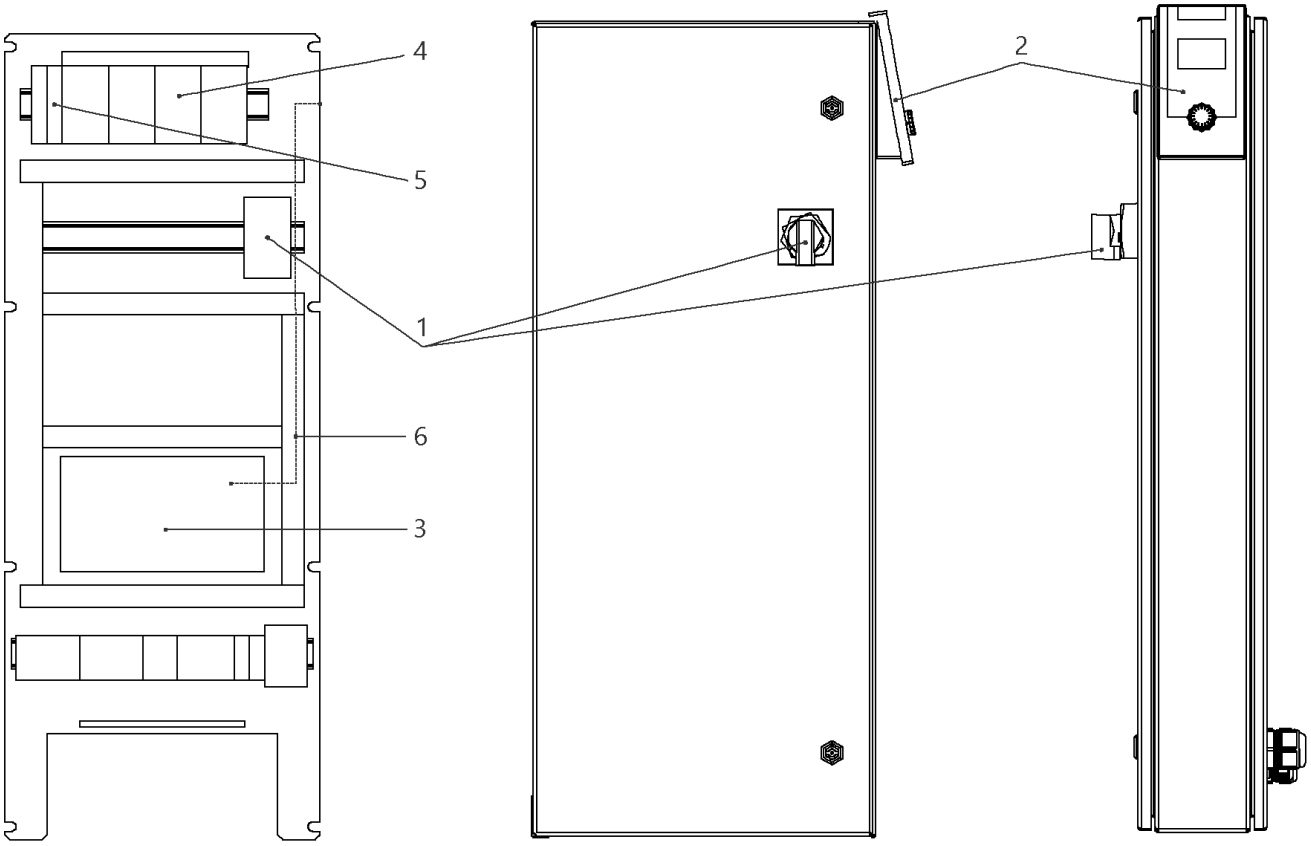
4
5
1
6
3
2

## W-CTRL-SCE-B-2x10A-T34-FM-ND1-AVC-PKG (2541913)

| Item | Article no. | Description | Quantity |
|---|---|---|---|
| 1 | 2104470 | MAIN SWITCH OT40F3 L250 KIT | 1 |
| 2 | 4184784 | CONTROL PANEL HMI SC KIT | 1 |
| 2 | 4185259 | ASSEMBLY DISPLAY SC PKG VP. | 1 |
| Note: DISPLAY ALONE / PLATINE SEULE | | | |
| 3 | 4185257 | ASSEMBLY CPU SCe Booster VP. | 1 |
| 4 | 2119861 | AUTOMATIC CIRCUIT BREAKER S203 B13 3POL. | 1 |
| 5 | 2046288 | CIRCUIT BREAKER S201 B16 | 1 |
| 6 | 4197081 | CABLE RJ45 CAT6 0,5M RED SC-PANEL VP. | 1 |

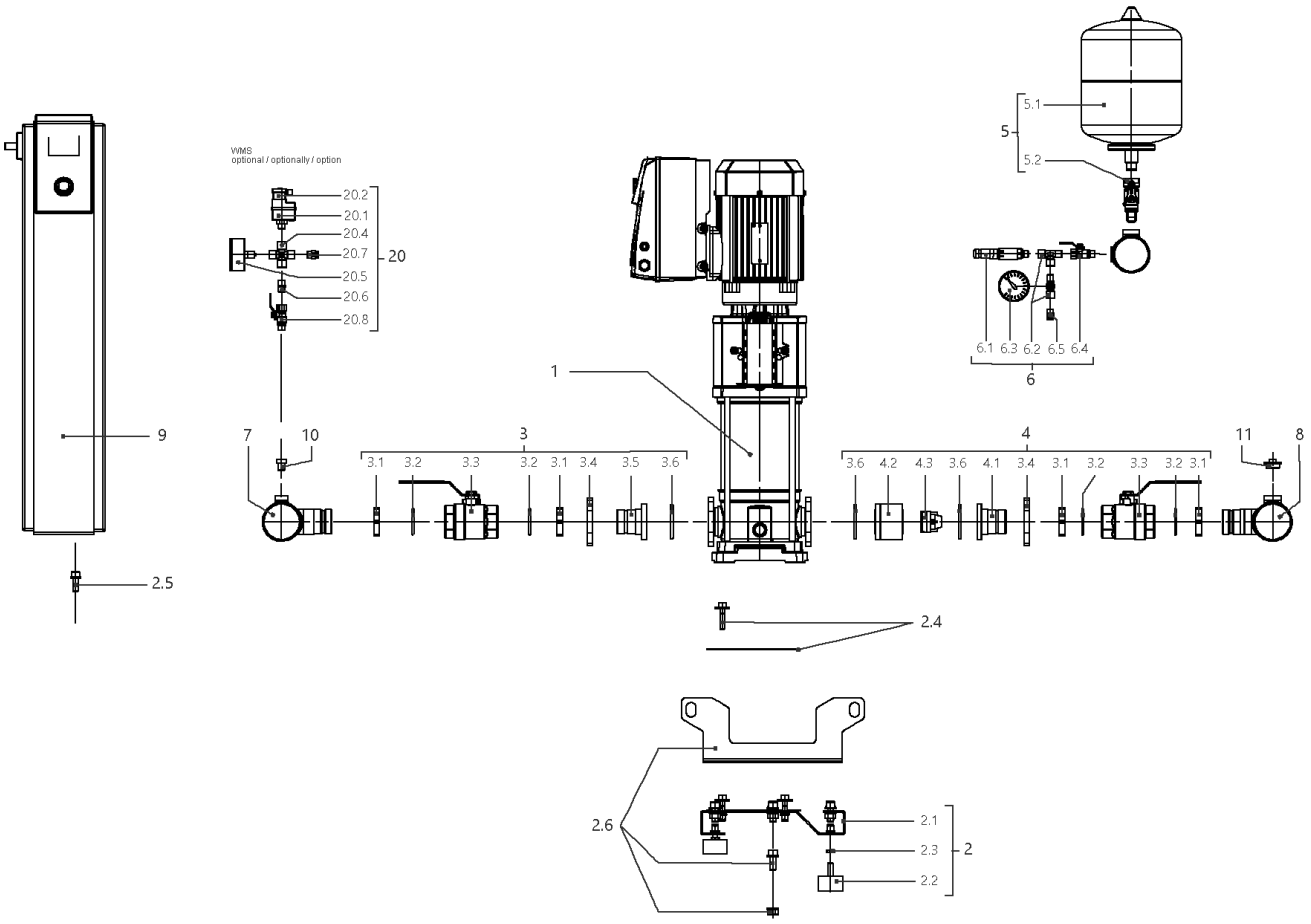
VVMS
optional / optionally / option
20.2
20.1
20.4
20.7
20.5
20.6
20.8
20
5.1
5
5.2
6.1 6.3 6.2 6.5 6.4
6
1
9
7
10
3
3.1 3.2 3.3 3.2 3.1 3.4 3.5 3.6
4
3.6 4.2 4.3 3.6 4.1 3.4 3.1 3.2 3.3 3.2 3.1
11
8
2.5
2.4
2.6
2.1
2.3
2.2
2

| Item | Article no. | Description | Quantity |
|---|---|---|---|
| 1 | | HELIX VE1003-1/16/E/S | 1 |
| Note: TO / BIS / JUSQU'AU 31/03/2016 | | | |
| 1 | 4201549 | HELIX VE1003-1/16/E/S | 1 |
| Note: FROM / AB / À PARTIR DU 01/04/2016 | | | |
| 2 | 4199874 | BASE PLATE DE2 850x300 M10 KIT | 1 |
| Note: TO / BIS / JUSQU'AU 06/02/2014 | | | |
| 2.1 | | > BASEPLATE_2x4/6/10V_E300_850x300_BOX_150 | 1 |
| 2.2 | 2028654 | > VIBRATION DAMPER D.50X30 M10X28 | 1 |
| 2.3 | 2028281 | > NUT M10 DIN936 (ISO4035) 17H VZ | 1 |
| 2.4 | 4199875 | > HOLDER PUMP Siboost Helix V2/4 KIT | 1 |
| 2.5 | 4197084 | > HOLDER SWITCHBOX WILO Smart Control KIT | 1 |
| 2.6 | 4197085 | > LIFTING Siboost HELIX SC KIT | 1 |
| 2 | 4197122 | BASE PLATE DE2 850x300 M10 KIT | 1 |
| Note: FROM / AB / À PARTIR DU 07/02/2014 | | | |
| 2.1 | | > BASEPLATE_2x4/6/10V_E300_850x300_BOX_150 | 1 |
| 2.2 | 2028654 | > VIBRATION DAMPER D.50X30 M10X28 | 1 |
| 2.3 | 2028281 | > NUT M10 DIN936 (ISO4035) 17H VZ | 1 |
| 2.4 | 4197083 | > HOLDER PUMP Helix 10/16 KIT | 1 |
| 2.5 | 4197084 | > HOLDER SWITCHBOX WILO Smart Control KIT | 1 |
| 2.6 | 4197085 | > LIFTING Siboost HELIX SC KIT | 1 |
| 3 | 4197072 | SUCTION SIDE Siboost Helix10/16 KIT | 1 |
| 3.1 | 2032623 | > NUT G1 1/2"SW55 MS | 1 |
| 3.2 | 2032616 | > O-RING ID.44X3,53N DIN3771 E7502 | 1 |
| 3.2 | 2534877 | > BALL TAP KDW40-H G11/2I-I-DN40 DVGW | 1 |
| 3.4 | 2032626 | > OVAL FLANGE D52-LK100 ST-VZ | 1 |
| 3.5 | 2032627 | > UNION INSERT DN40 LAPPED FLANGE | 1 |
| 3.6 | 2032628 | > O-RING ID.56,52X5,33N DIN3771 E7502 | 1 |
| 4 | 4197074 | DELIVERY SIDE Siboost Helix V10 KIT | 1 |
| 3.1 | 2032623 | > NUT G1 1/2"SW55 MS | 1 |
| 3.2 | 2032616 | > O-RING ID.44X3,53N DIN3771 E7502 | 1 |
| 3.3 | 2534877 | > BALL TAP KDW40-H G11/2I-I-DN40 DVGW | 1 |
| 3.4 | 2032626 | > OVAL FLANGE D52-LK100 ST-VZ | 1 |
| 4.1 | 2054316 | > UNION INSERT DN40 LAPPED FLANGE(W.SLOT) | 1 |
| 4.2 | 2054317 | > HOUSING F.NON RETURN VALVE(RV-IN) DN40 | 1 |

| Item | Article no. | Description | Quantity |
|---|---|---|---|
| 4.3 | 2032631 | > NON-RETURN-DEVICE DN40 (MTR)TYP RV-IN | 1 |
| 3.6 | 2032628 | > O-RING ID.56,52X5,33N DIN3771 E7502 | 1 |
| 5 | 2032642 | DIAPHREM TANK 8L/PN16 DIN4807/T5 KIT | 1 |
| 5.1 | 2045914 | > DIAPHREM TANK 8L TYP-DD 16BAR | 1 |
| 5.2 | 2027853 | > FLOW FITTING G3/4 FOR DIAPHRAGM VES. | 1 |
| 6 | 4197076 | PRESSURE SENSOR/ GAUGE 0-16BAR KIT | 1 |
| 6.1 | 2085909 | > PRESS.SENSOR 1/4" 0-16BAR 4-20MA VP. | 1 |
| 6.2 | 4197077 | > T-PIECE 1/4" VP. | 1 |
| 6.3 | 2028692 | > PRESSURE GAUGE NG63-PN16-G1/4 | 1 |
| 6.4 | 2028291 | > BALL TAP R1/4" PN42 GIACOMINI R254DL | 1 |
| 6.5 | 2028691 | > BLOWGUN 1/4" MS 30BAR VP. | 1 |
| 7 | 4197123 | PIPE DE2 R21/2''-2x11/2"+1x1/4x600 VP. | 1 |
| 8 | 4197124 | PIPE DE2 R21/2''-2x11/2"+1x1/4+1x3/4x600 | 1 |
| 9 | | W-CTRL-SCE-B-2x0,55-1,5KW-T4-FM-ND1 | 1 |
| Note: TO / BIS / JUSQU'AU 18/05/2014 | | | |
| 9 | 2541913 | W-CTRL-SCE-B-2x10A-T34-FM-ND1-AVC-PKG | 1 |
| Note: FROM / AB / À PARTIR DU 19/05/2014 | | | |
| 10 | 4197079 | PLUG G1/4"x10 AISI304 KIT | 1 |
| 11 | 2032654 | PLUG R3/4" MS VIEGA 1751 | 1 |
| 20 | 2521150 | ASSEMBLY WMS. DE-EB. +VP | 1 |
| 20.1 | 2028652 | > PRESSURE SWITCH PS3-ASR 1/(1,3) VP. | 1 |
| 20.2 | 2130983 | > PLUG PS3-415 WITH KABEL 1,5M 2NO VP. | 1 |
| 20.4 | 2028290 | > CROSSPIECE R1/4" MS-NICKEL | 1 |
| 20.5 | 2028687 | > PRESSURE GAUGE NG63 R1/4" HI.0-6BAR | 1 |
| 20.6 | 2054268 | > DUAL NIPPLE G1/4" x G1/4" MS VP. | 1 |
| 20.7 | 2028691 | > BLOWGUN 1/4" MS 30BAR VP. | 1 |
| 20.8 | 2028291 | > BALL TAP R1/4" PN42 GIACOMINI R254DL | 1 |

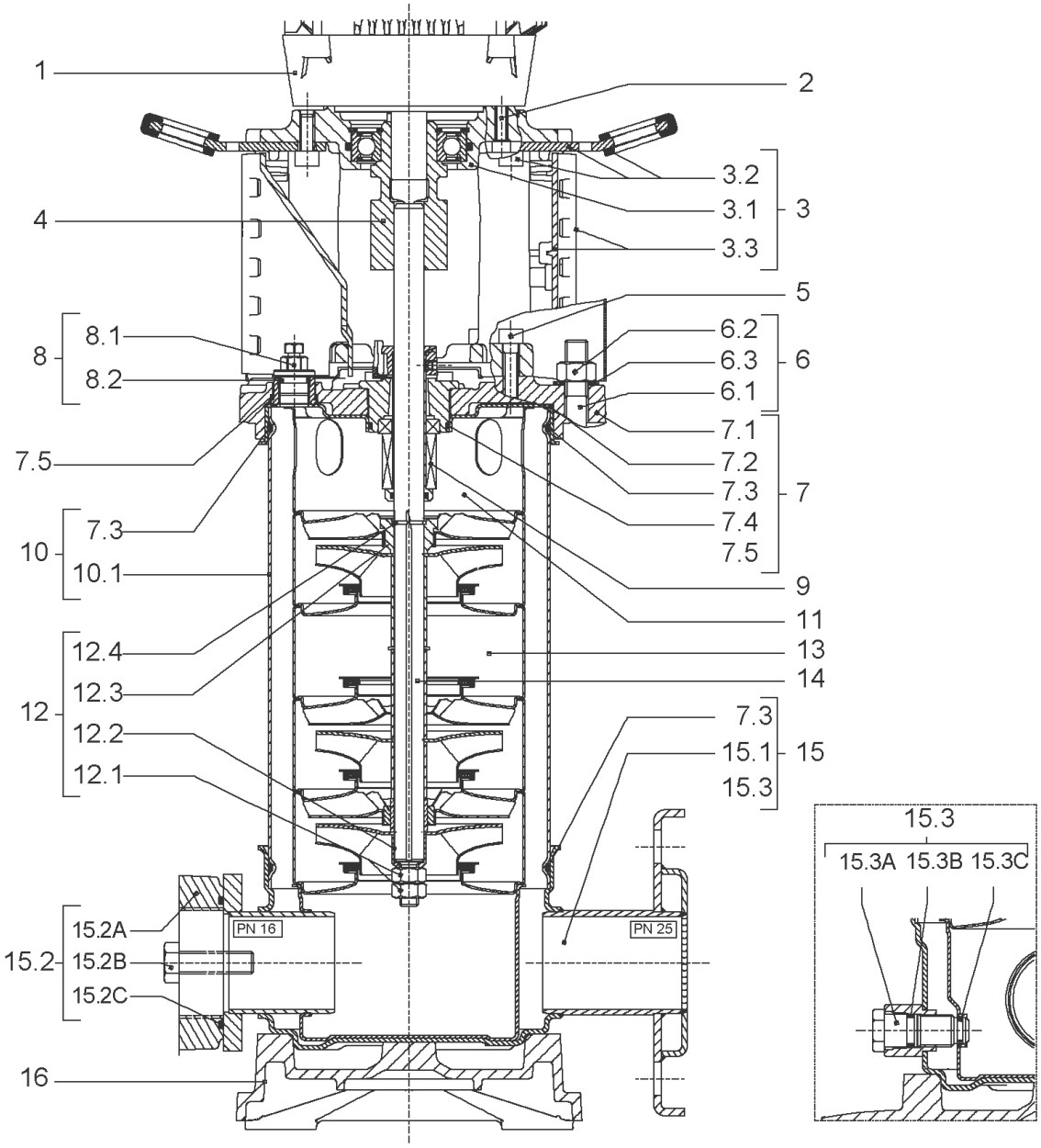
1
2
3.2
3.1
3
3.3
4
5
8.1
8
8.2
6.2
6.3
6
6.1
7.1
7.5
7.2
7.3
7
7.4
7.3
10
7.5
10.1
9
11
12.4
13
12.3
14
12
12.2
7.3
15.1
15
12.1
15.3
15.3
15.3A 15.3B 15.3C
15.2A
PN 16
PN 25
15.2
15.2B
15.2C
16

| Item | Article no. | Description | Quantity |
|---|---|---|---|
| 1 | | DRIVE HELIX-VE1003IE2-WE KIT | 1 |
| Note: MOTOR BRAND WILO ELEC | | | |
| 1 | | DRIVE HELIX-VE1003-IE4-WE-KIT | 1 |
| Note: MOTOR BRAND WILO ELEC | | | |
| 2 | 4159703 | SCREW M8X40 (4 PIECES) | 1 |
| 3 | 4172795 | LANTERNE FT115 HELIX KIT | 1 |
| 3.1 | | > M+5_6_LANTERN_ONE-PIECE_FT115_CATA | 1 |
| 3.2 | 2127604 | > EYELET CPL.FT HELIX(2 PIECES) | 1 |
| 3.3 | 4159692 | > COUPLING PROTECTOR FT HELIX KIT | 1 |
| 4 | 4159709 | COUPLING D.16xD.24 FT115 HELIX KIT | 1 |
| 5 | 4159707 | SCREW M8X30 (4 PIECES) | 1 |
| 6 | 4177812 | STUD BOLT M12X300KIT | 1 |
| 6.1 | | > TIE BOLT M12-300x18x30-1.4057 | 1 |
| 6.2 | 2094647 | > NUT M12 M12 ISO4032 VP. | 1 |
| 6.3 | 2123557 | > WASHER CS-12.4-24-1.6-NFE25 (4 PIECES) | 1 |
| 7 | 4210143 | STATIONARY RING HOLDER HELIX 6" EPDM | 1 |
| 7.2 | 2127607 | > STATIONARY RING HOLDER 6" HELIX 1.4301 V | 1 |
| 7.3 | 4176513 | > O-RING FOR PUMP JACKET VP. | 1 |
| 7.4 | 2127603 | > O-RING ID.37,6x2,4 EPDM VP. | 1 |
| 7.5 | 2127602 | > O-RING ID.21,35x2 EPDM VP. | 1 |
| 8 | 4159686 | FILING/PURGING PLUG HELIX EPDM KIT | 1 |
| 9 | 4171327 | SEAL-KIT-HELIX6-10-16 O/E KIT | 1 |
| 10 | 4177813 | HOUSING PIPE D.152x172 1.4301 KIT | 1 |
| 7.3 | 4176513 | > O-RING FOR PUMP JACKET VP. | 1 |
| 10.1 | | > HOUSING-PIPE Ø152-M+1003-304 | 1 |
| 11 | 4172791 | CENTERING STAGE-RETURN HELIX10 1.4301VP. | 1 |
| 12 | 4209273 | SHAFT EQUIPMENT HELIX V10 KIT | 1 |
| 12.1 | | > NUT-H-M10-A4.70 | 1 |
| 12.2 | | > SERRATED LOCK WASHER M+10M3-316L | 1 |
| 12.3 | | > IMPELLER STOP RING L33,6-304 | 1 |
| 12.4 | | > STOP-RUSH-1/2-D16xd2-M+316 | 1 |
| 13 | | HYDRAULIC HELIX V 1003 1.4307 | 1 |
| 14 | 4177815 | SHAFT D.16X292,5 1.4301 VP. | 1 |
| 15 | 4159682 | PUMP HOUSING HELIX DN50 PN16 1.4301 KIT | 1 |

| Item | Article no. | Description | Quantity |
|---|---|---|---|
| 7.3 | 4176513 | > O-RING FOR PUMP JACKET VP. | 1 |
| 15.1 | | > BLASTING PPE HOUSING V-PN16-DN50-304 | 1 |
| 15.2 | 4217893 | > COUNTER FLANGE-G1"1/2-PN16-GJL KIT | 1 |
| 15.3 | 4171321 | > PRIMING/DRAIN PLUG EPDM HELIX KIT | 1 |
| 16 | 4176517 | BASEPLATE V8/10 VP. | 1 |

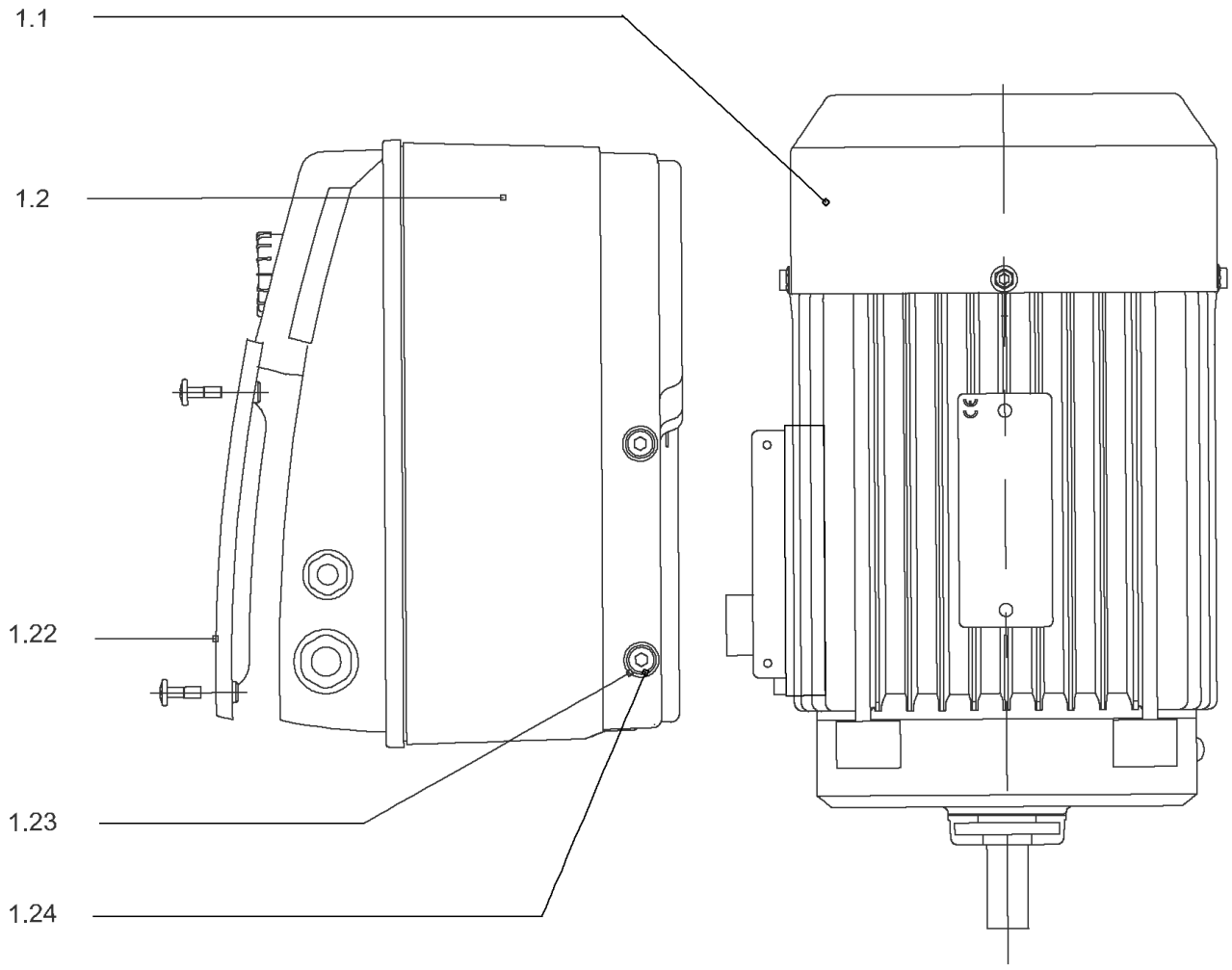
1.1
1.2
1.22
1.23
1.24

## DRIVE HELIX-VE1003IE2-WE KIT

| Item | Article no. | Description | Quantity |
|---|---|---|---|
| 1.1 | | MOTOR 1,5/2/90 3~ 380V 60HZ IE2 WE VP. | 1 |
| Note: no longer available/nicht mehrlieferbar/n'est plus disponible | | | |
| | | SPARE PARTS MOTOR:ON REQUEST | 1 |
| 1.2 | 4186336 | MODULE HELIX-VE1003-IE2-WE KIT | 1 |
| 1.22 | 2054227 | > MODULE COVER/GASKET TL3/4 KIT | 1 |
| 1.23 | 4215716 | > SCREW M5X16 DIN912 8.8 A2A (4pieces) VP. | 1 |
| 1.24 | 2057978 | > RONDELLE A5,3 DIN6797 FST ZN (4 PIECES) | 1 |

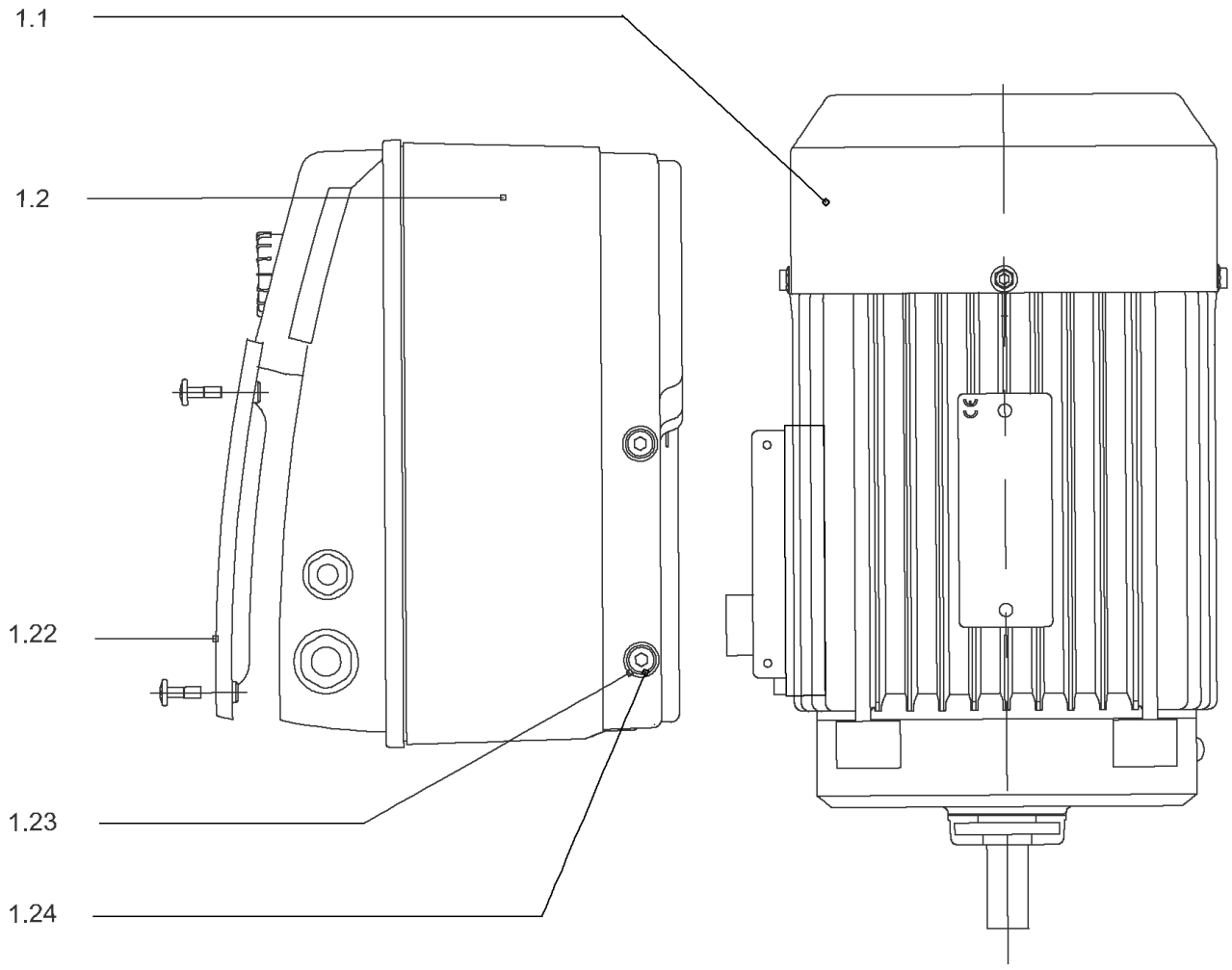
1.1
1.2
1.22
1.23
1.24

## DRIVE HELIX-VE1003-IE4-WE-KIT

| Item | Article no. | Description | Quantity |
|---|---|---|---|
| 1.1 | 4207918 | MOTOR 1.5/2/90 3~ 380V 60HZ IE4 WE VP. | 1 |
| | | SPARE PARTS MOTOR:ON REQUEST | 1 |
| 1.2 | 4209327 | MODULE HELIX-VE1003-IE4-WE KIT | 1 |
| 1.22 | 2054227 | > MODULE COVER/GASKET TL3/4 KIT | 1 |
| 1.23 | 4215716 | > SCREW M5X16 DIN912 8.8 A2A (4pieces) VP. | 1 |
| 1.24 | 2057978 | > RONDELLE A5,3 DIN6797 FST ZN (4 PIECES) | 1 |

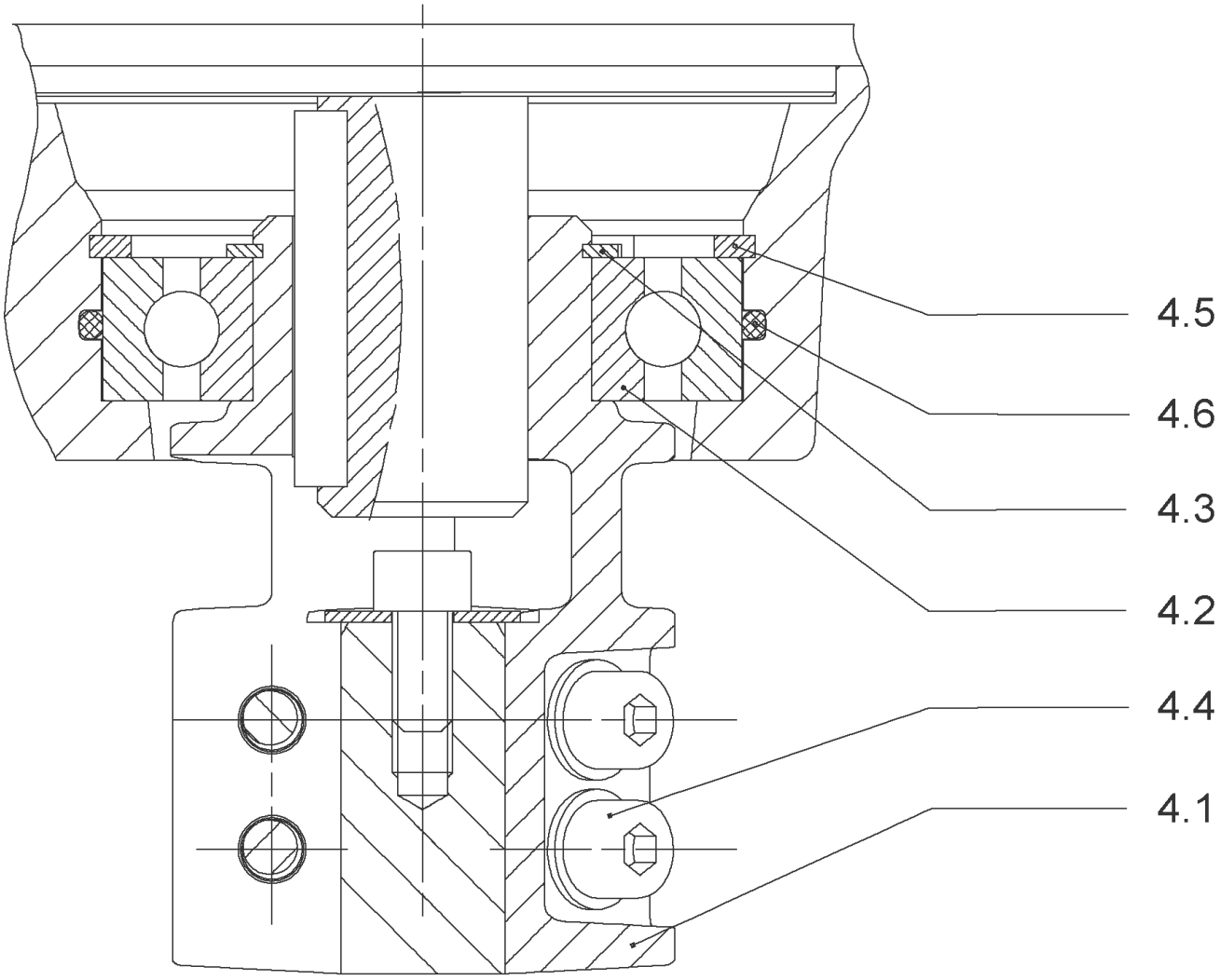
4.5
4.6
4.3
4.2
4.4
4.1

## COUPLING D.16xD.24 FT115 HELIX KIT (4159709)

| Item | Article no. | Description | Quantity |
|---|---|---|---|
| 4.1 | | COUPLING M+ Ø16XØ24 FT115 MACHINED | 1 |
| 4.2 | 2131023 | BALL BEARING 6207/ZZ-C3(HT)VP. | 1 |
| 4.3 | 4234254 | CIRCLIP-FOR-SHAFT-D35x1.5 VP. | 1 |
| 4.4 | 4157726 | SCREW KIT M8X30 (4 PIECES) | 1 |
| 4.5 | 4234251 | CIRCLIP-D72x2.5 VP. | 1 |
| 4.6 | 4234246 | O-RING 72X3 VP. | 1 |
| | | NOMEL CONTACT WASHER 8x16x1,4 STEEL ZC | 1 |

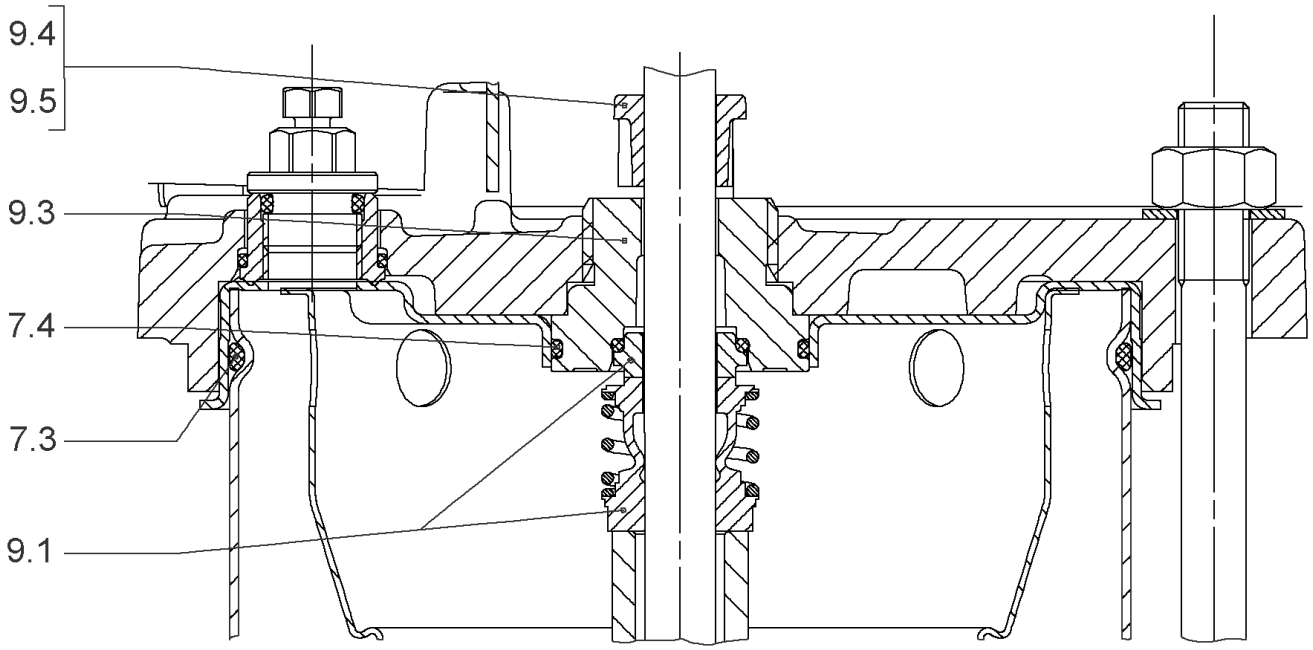
9.4
9.5
9.3
7.4
7.3
9.1

## SEAL-KIT-HELIX6-10-16 O/E KIT (4171327)

| Item | Article no. | Description | Quantity |
|---|---|---|---|
| 7.3 | 4176513 | O-RING FOR PUMP JACKET VP. | 1 |
| 7.4 | 2127603 | O-RING ID.37,6x2,4 EPDM VP. | 1 |
| 9.1 | 4177801 | MECH.SEAL HELIX6-10-16 O/E VP. | 1 |
| 9.3 | 4177798 | MACHINED RING HOLDER M+6" Ø16 304 VP. | 1 |
| 9.5 | 4177799 | MACHINED DRIVE RING Ø16 VP. | 1 |
| 9.4 | 4176520 | SCREW CH M5x5 A4-70 ( 3PIECES ) | 1 |

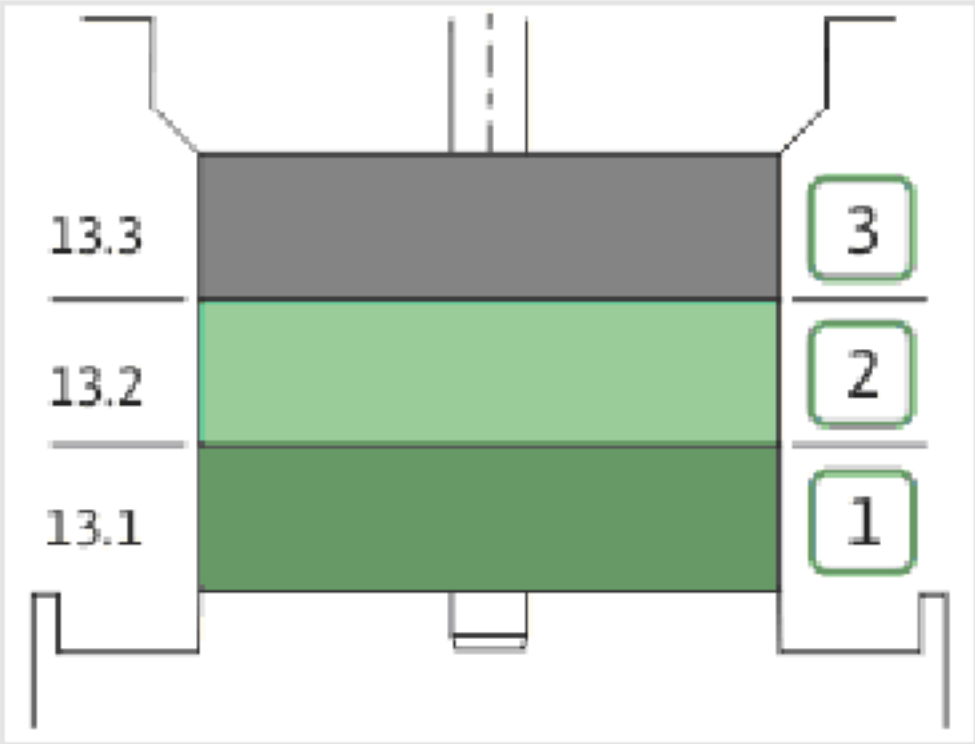
13.3
13.2
13.1
3
2
1

| Item | Article no. | Description | Quantity |
|---|---|---|---|
| 13.1 | 4171331 | STAGE HELIX10 1.4301KIT | 1 |
| | | > MACH.STG-CASING-WOGV-WNR-M+10-304 | 1 |
| | | > IMPELLER-M+10-304 | 1 |
| 13.2 | 4172792 | INTERMEDIATE STAGE HELIX 10 1.4301 KIT | 1 |
| | | > MACH.BEARING-STG-CASING-WNR-M+10-304 | 1 |
| | | > IMPELLER-M+10-304 | 1 |
| | | > SHAFT SLEEVE-SPACER-Ø19,35x18,465-304 | 1 |
| | | > SHAFT-SLEEVE-D16xD20x18-CW | 1 |
| 13.3 | 4172793 | INTERMEDIATE STAGE HELIX 10 1.4301 KIT | 1 |
| | | > MACH.STD-STG-CASING-WGV+NR-M+10-304 | 1 |
| | | > IMPELLER-M+10-304 | 1 |
| | | > IMPELLER SPACER Ø16,05X19,45-L36,465-304 | 1 |

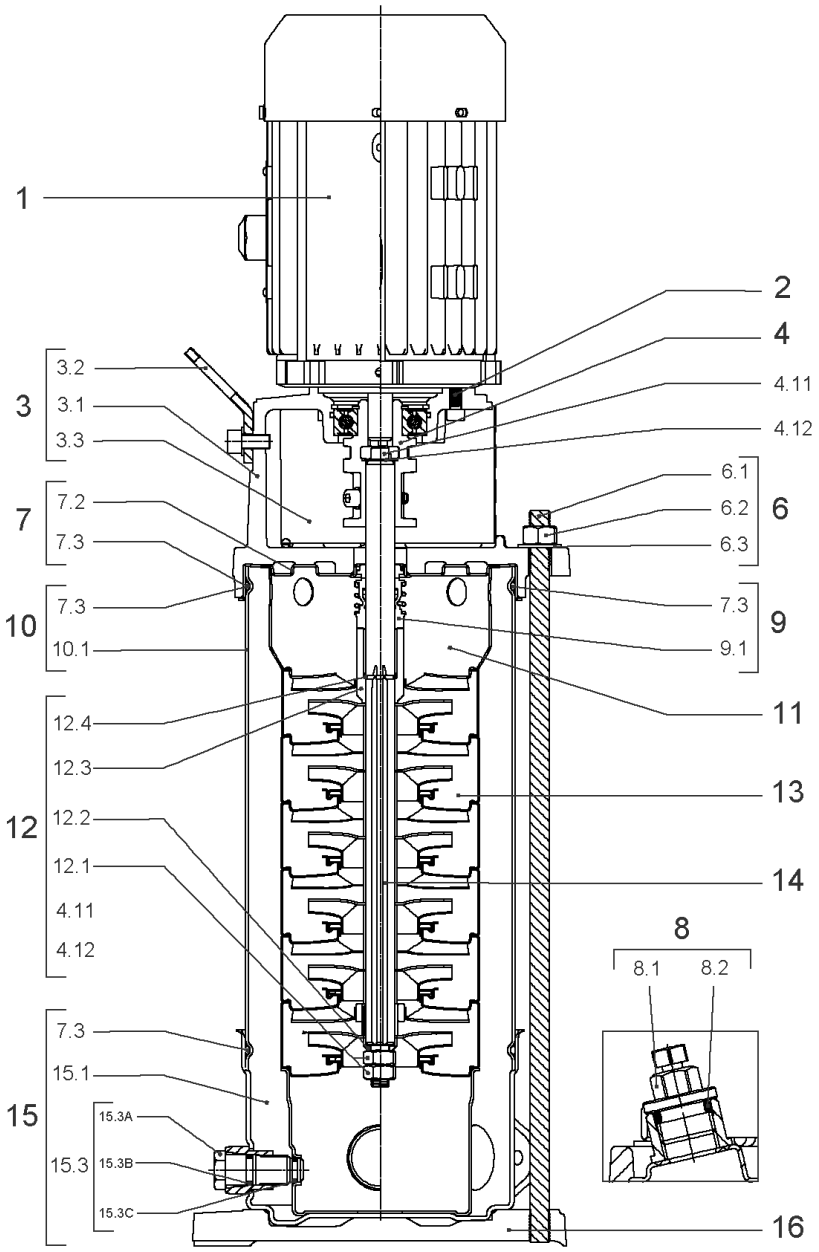
1
2
4
4.11
4.12
3
3.2
3.1
3.3
7
7.2
7.3
10
7.3
10.1
6
6.1
6.2
6.3
9
7.3
9.1
11
12
12.4
12.3
12.2
12.1
4.11
4.12
13
14
8
8.1
8.2
15
7.3
15.1
15.3
15.3A
15.3B
15.3C
16

## HELIX VE1003-1/16/E/S (4201549)

| Item | Article no. | Description | Quantity |
|---|---|---|---|
| 1 | | DRIVE HELIX-VE1003-IE4-WE-KIT | 1 |
| Note: MOTOR BRAND WILO ELEC | | | |
| | | SPARE PARTS MOTOR:ON REQUEST | 1 |
| 2 | 4159707 | SCREW M8X30 (4 PIECES) | 1 |
| 3 | 4213784 | LANTERN FT115 HELIX KIT | 1 |
| 3.1 | | > LANT-MOT-VMI-ReDTC6"-FT115-MACHINED+CATA | 1 |
| 3.2 | 4184852 | > EYELET CPL.FT HELIX (2 PIECES) | 1 |
| 3.3 | 4213782 | > COUPLING PROTECTOR FT115/130 HELIX KIT | 1 |
| 4 | 4159709 | COUPLING D.16xD.24 FT115 HELIX KIT | 1 |
| 6 | 4177812 | STUD BOLT M12X300KIT | 1 |
| 6.1 | | > TIE BOLT M12-300x18x30-1.4057 | 1 |
| 6.2 | 2094647 | > NUT M12 M12 ISO4032 VP. | 1 |
| 6.3 | 2123557 | > WASHER CS-12.4-24-1.6-NFE25 (4 PIECES) | 1 |
| 7 | 4214481 | STATIONARY RING HOLDER HELIX D27 ReDTC | 1 |
| 7.2 | 4214479 | > STATIONARY RING HOLDER HELIX D27 VP. | 1 |
| 7.3 | 4176513 | > O-RING FOR PUMP JACKET VP. | 1 |
| 8 | 4212724 | FILING/PURGING PLUG HELIX ReDTC KIT | 1 |
| 8.1 | | > FILLING PLUG MVI6"-304 | 1 |
| 8.2 | 4177800 | > O-RING EPDM PLUG HELIX VP. | 1 |
| 9 | 4214483 | MECH.SEAL HELIX6-10-16 O/E ReDTC KIT | 1 |
| 9.1 | 4177801 | > MECH.SEAL HELIX6-10-16 O/E VP. | 1 |
| 7.3 | 4176513 | > O-RING FOR PUMP JACKET VP. | 1 |
| 10 | 4177813 | HOUSING PIPE D.152x172 1.4301 KIT | 1 |
| 7.3 | 4176513 | > O-RING FOR PUMP JACKET VP. | 1 |
| 10.1 | | > HOUSING-PIPE Ø152-M+1003-304 | 1 |
| 11 | 4172791 | CENTERING STAGE-RETURN HELIX10 1.4301VP. | 1 |
| 12 | 4214517 | SHAFT EQUIPMENT HELIX V10 ReDTC KIT | 1 |
| 12.1 | | > NUT-H-M10-A4.70 | 1 |
| 12.2 | | > SERRATED LOCK WASHER M+10M3-316L | 1 |
| 12.3 | | > 1/2-SNAP-RING-6/10M3-316L | 1 |
| 12.4 | | > STOP-RUSH-1/2-D16xd2-M+316 | 1 |
| 4.11 | | > SCREW CHC-M6X14-8.8-ISO4762-GEOMET500A | 1 |
| 4.12 | | > WASHER D.24 L6U ZINK | 1 |
| 13 | | HYDRAULIC HELIX V 1003 1.4307 | 1 |

| Item | Article no. | Description | Quantity |
|---|---|---|---|
| 14 | 4214493 | SHAFT D.16X241 HELIX 1.4057 VP. | 1 |
| 15 | 4159682 | PUMP HOUSING HELIX DN50 PN16 1.4301 KIT | 1 |
| 7.3 | 4176513 | > O-RING FOR PUMP JACKET VP. | 1 |
| 15.1 | | > BLASTING PPE HOUSING V-PN16-DN50-304 | 1 |
| 15.2 | 4217893 | > COUNTER FLANGE-G1"1/2-PN16-GJL KIT | 1 |
| 15.3 | 4171321 | > PRIMING/DRAIN PLUG EPDM HELIX KIT | 1 |
| 16 | 4176517 | BASEPLATE V8/10 VP. | 1 |

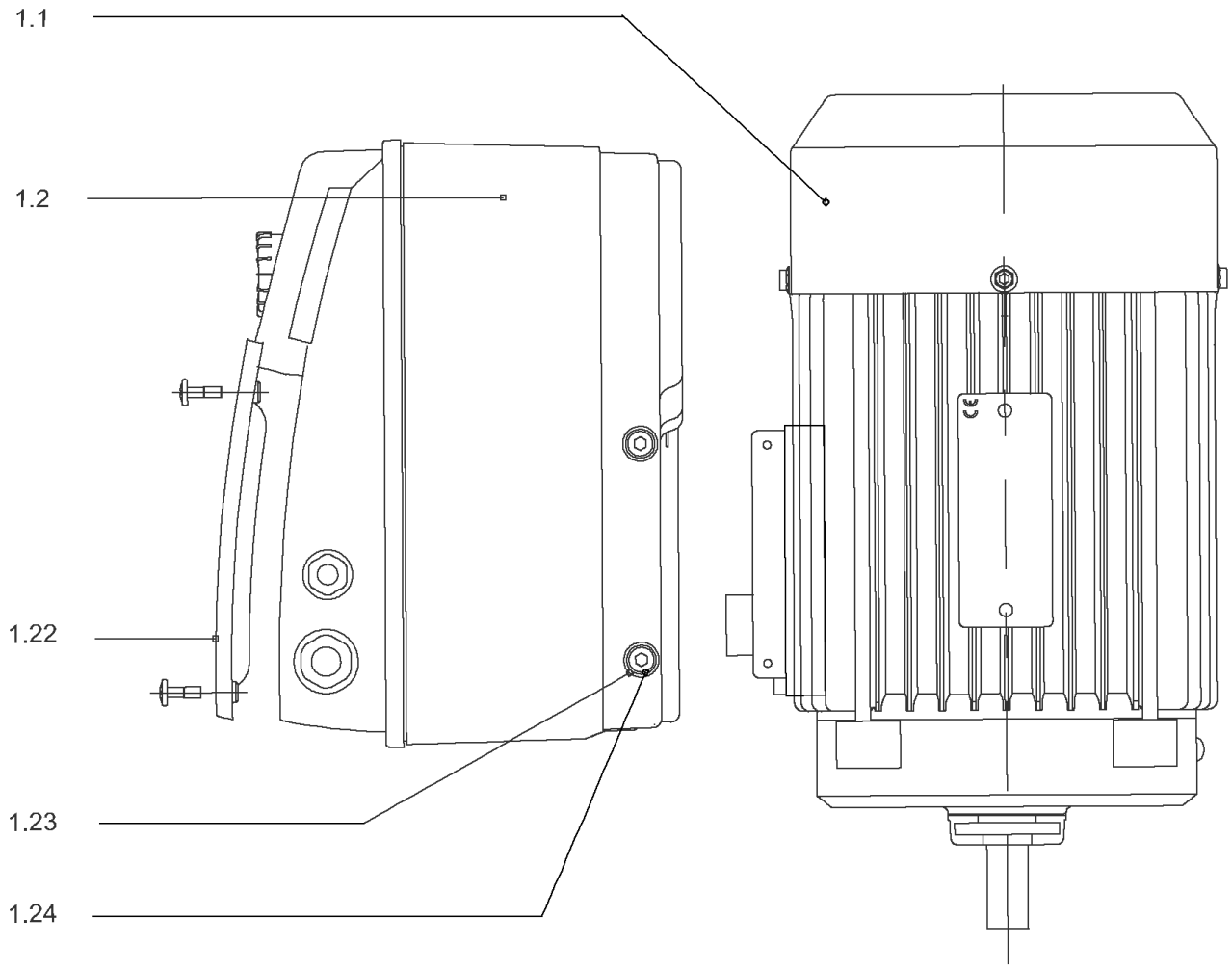
1.1
1.2
1.22
1.23
1.24

## DRIVE HELIX-VE1003-IE4-WE-KIT

| Item | Article no. | Description | Quantity |
|---|---|---|---|
| 1.1 | 4207918 | MOTOR 1.5/2/90 3~ 380V 60HZ IE4 WE VP. | 1 |
| | | SPARE PARTS MOTOR:ON REQUEST | 1 |
| 1.2 | 4209327 | MODULE HELIX-VE1003-IE4-WE KIT | 1 |
| 1.22 | 2054227 | > MODULE COVER/GASKET TL3/4 KIT | 1 |
| 1.23 | 4215716 | > SCREW M5X16 DIN912 8.8 A2A (4pieces) VP. | 1 |
| 1.24 | 2057978 | > RONDELLE A5,3 DIN6797 FST ZN (4 PIECES) | 1 |

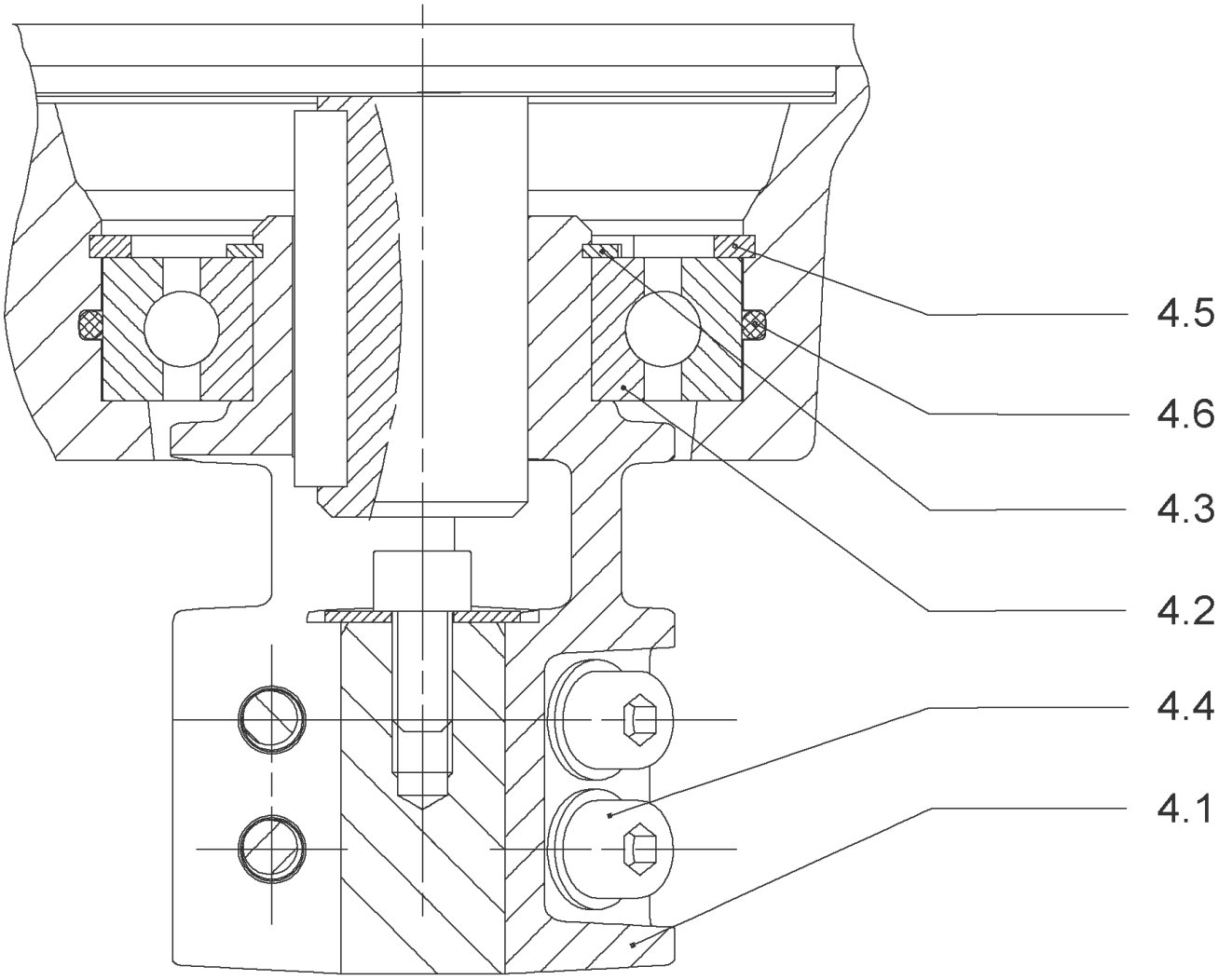
4.5
4.6
4.3
4.2
4.4
4.1

## COUPLING D.16xD.24 FT115 HELIX KIT (4159709)

| Item | Article no. | Description | Quantity |
|---|---|---|---|
| 4.1 | | COUPLING M+ Ø16XØ24 FT115 MACHINED | 1 |
| 4.2 | 2131023 | BALL BEARING 6207/ZZ-C3(HT)VP. | 1 |
| 4.3 | 4234254 | CIRCLIP-FOR-SHAFT-D35x1.5 VP. | 1 |
| 4.4 | 4157726 | SCREW KIT M8X30 (4 PIECES) | 1 |
| 4.5 | 4234251 | CIRCLIP-D72x2.5 VP. | 1 |
| 4.6 | 4234246 | O-RING 72X3 VP. | 1 |
| | | NOMEL CONTACT WASHER 8x16x1,4 STEEL ZC | 1 |

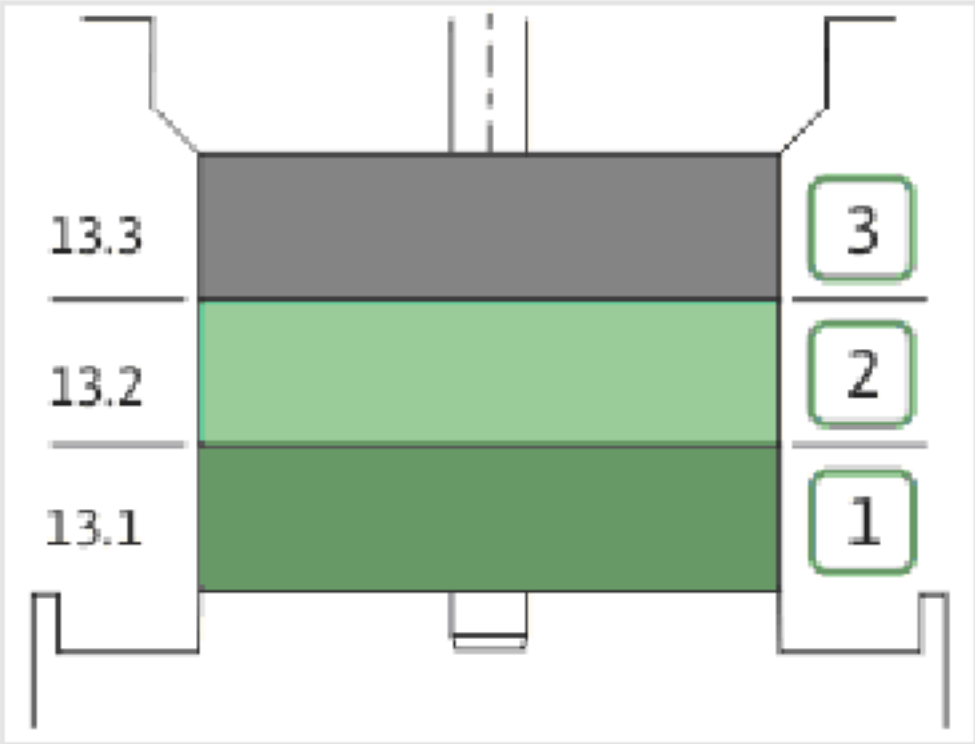
13.3
13.2
13.1
3
2
1

| Item | Article no. | Description | Quantity |
|---|---|---|---|
| 13.1 | 4171331 | STAGE HELIX10 1.4301KIT | 1 |
| | | > MACH.STG-CASING-WOGV-WNR-M+10-304 | 1 |
| | | > IMPELLER-M+10-304 | 1 |
| 13.2 | 4172792 | INTERMEDIATE STAGE HELIX 10 1.4301 KIT | 1 |
| | | > MACH.BEARING-STG-CASING-WNR-M+10-304 | 1 |
| | | > IMPELLER-M+10-304 | 1 |
| | | > SHAFT SLEEVE-SPACER-Ø19,35x18,465-304 | 1 |
| | | > SHAFT-SLEEVE-D16xD20x18-CW | 1 |
| 13.3 | 4172793 | INTERMEDIATE STAGE HELIX 10 1.4301 KIT | 1 |
| | | > MACH.STD-STG-CASING-WGV+NR-M+10-304 | 1 |
| | | > IMPELLER-M+10-304 | 1 |
| | | > IMPELLER SPACER Ø16,05X19,45-L36,465-304 | 1 |

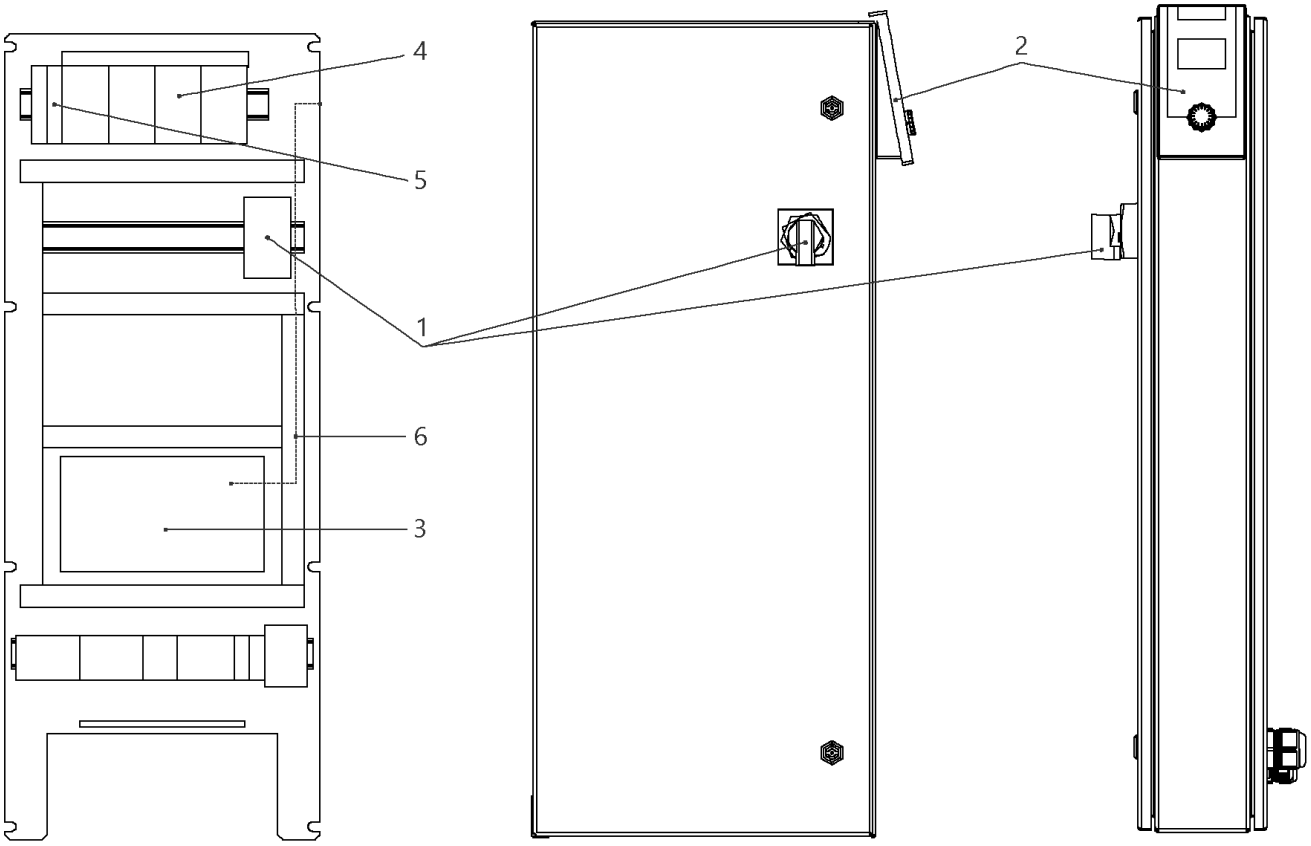
4
5
1
6
3
2

## W-CTRL-SCE-B-2x0,55-1,5KW-T4-FM-ND1

| Item | Article no. | Description | Quantity |
|---|---|---|---|
| 1 | 2104470 | MAIN SWITCH OT40F3 L250 KIT | 1 |
| 2 | 4184784 | CONTROL PANEL HMI SC KIT | 1 |
| 2 | 4185259 | ASSEMBLY DISPLAY SC PKG VP. | 1 |
| 3 | 4185257 | ASSEMBLY CPU SCe Booster VP. | 1 |
| 4 | 2051217 | AUTOM.CIRCUIT BREAKER S203 B16 TO7,5kW | 1 |
| 5 | 2046288 | CIRCUIT BREAKER S201 B16 | 1 |
| 6 | 4197081 | CABLE RJ45 CAT6 0,5M RED SC-PANEL VP. | 1 |

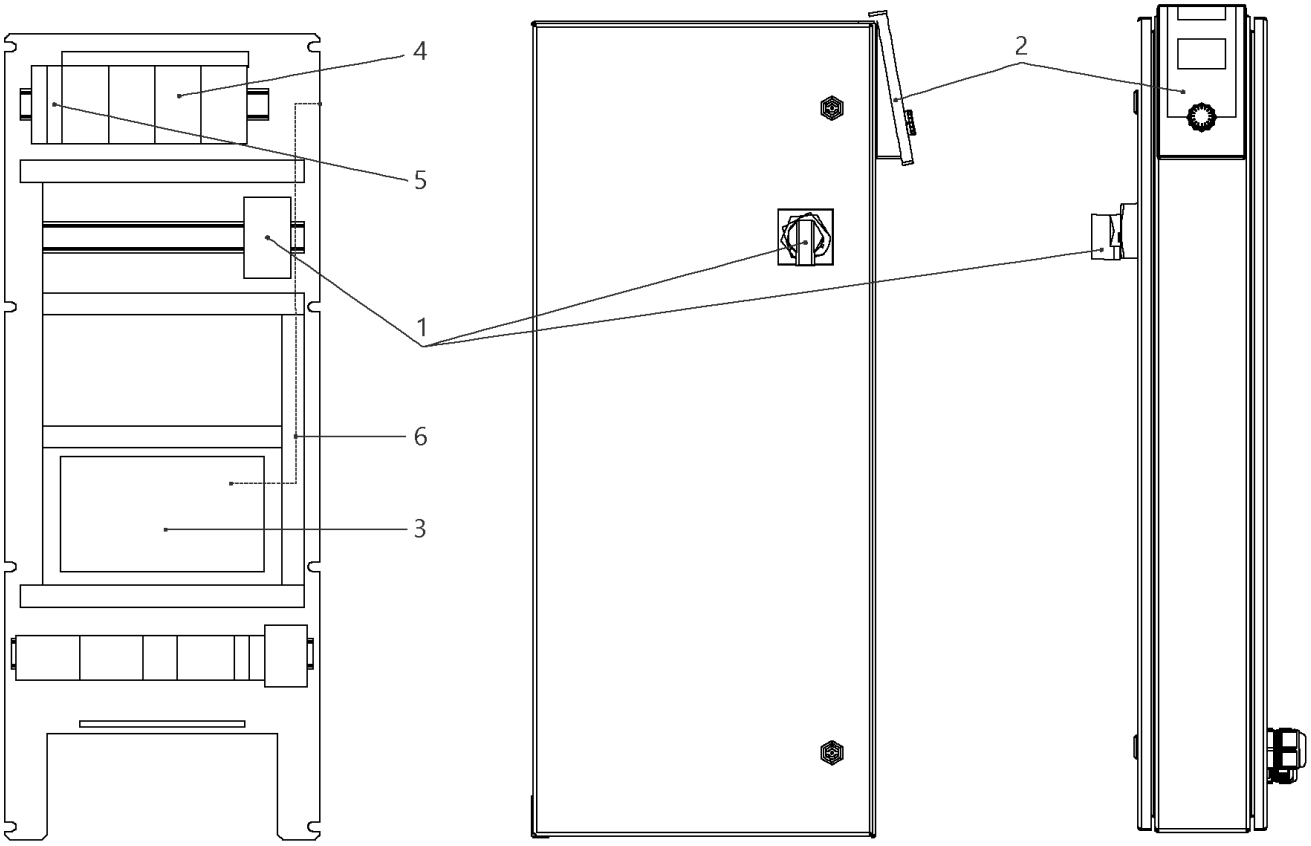
4
5
1
6
3
2

## W-CTRL-SCE-B-2x10A-T34-FM-ND1-AVC-PKG (2541913)

| Item | Article no. | Description | Quantity |
|---|---|---|---|
| 1 | 2104470 | MAIN SWITCH OT40F3 L250 KIT | 1 |
| 2 | 4184784 | CONTROL PANEL HMI SC KIT | 1 |
| 2 | 4185259 | ASSEMBLY DISPLAY SC PKG VP. | 1 |
| Note: DISPLAY ALONE / PLATINE SEULE | | | |
| 3 | 4185257 | ASSEMBLY CPU SCe Booster VP. | 1 |
| 4 | 2119861 | AUTOMATIC CIRCUIT BREAKER S203 B13 3POL. | 1 |
| 5 | 2046288 | CIRCUIT BREAKER S201 B16 | 1 |
| 6 | 4197081 | CABLE RJ45 CAT6 0,5M RED SC-PANEL VP. | 1 |

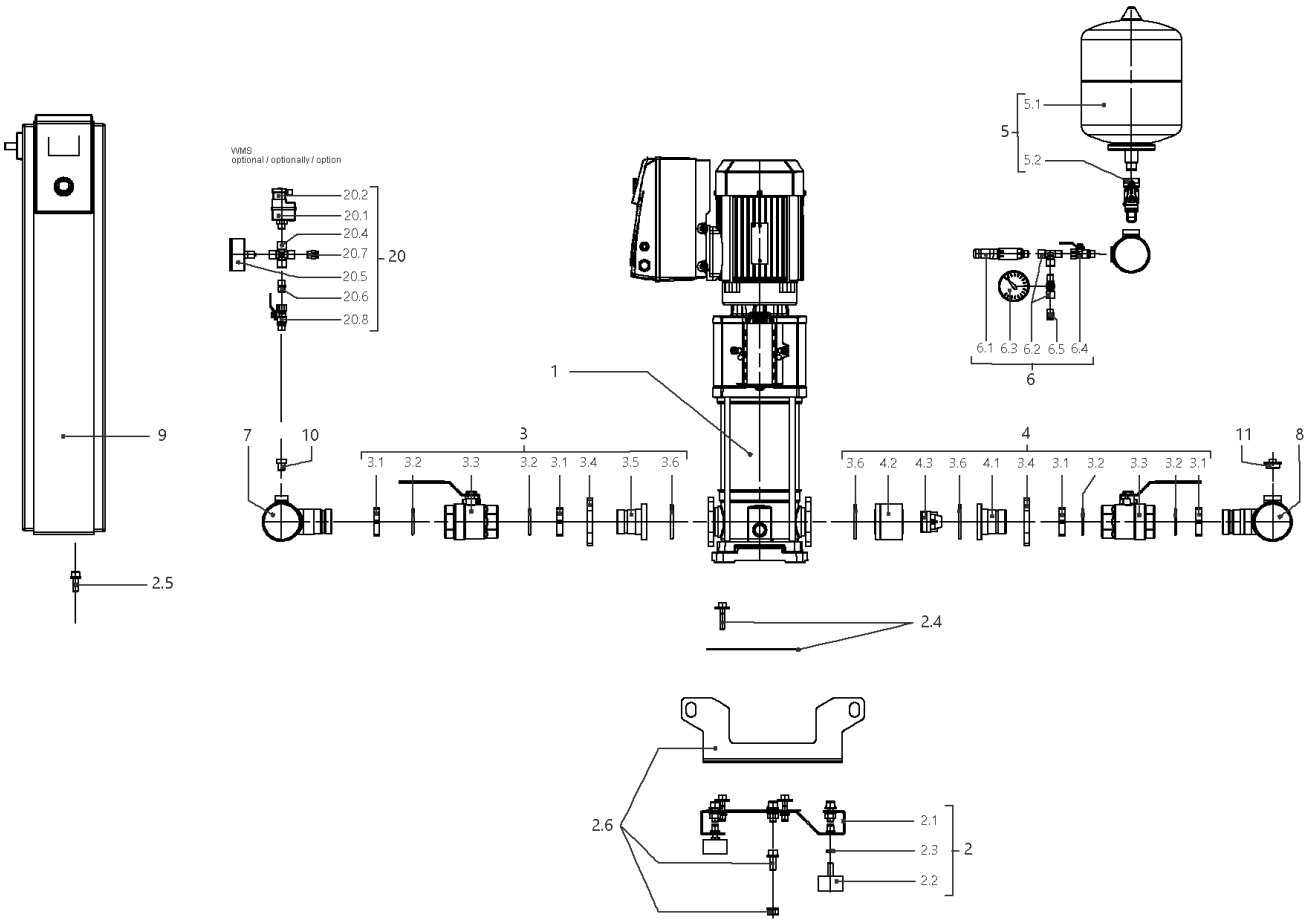
VVMS
optional / optionally / option
20.2
20.1
20.4
20.7
20.5
20.6
20.8
20
5.1
5
5.2
6.1 6.3 6.2 6.5 6.4
6
1
9
7
10
3
3.1 3.2 3.3 3.2 3.1 3.4 3.5 3.6
4
3.6 4.2 4.3 3.6 4.1 3.4 3.1 3.2 3.3 3.2 3.1
11
8
2.5
2.4
2.6
2.1
2.3
2.2
2

## SiBoost Smart 2HELIX VE1004 (2536346)

| Item | Article no. | Description | Quantity |
|---|---|---|---|
| 1 | | HELIX VE1004-1/16/E/S | 1 |
| Note: TO / BIS / JUSQU'AU 31/03/2016 | | | |
| 1 | 4201551 | HELIX VE1004-1/16/E/S | 1 |
| Note: FROM / AB / À PARTIR DU 01/04/2016 | | | |
| 2 | 4197125 | BASE PLATE DE2 850x420 KIT | 1 |
| Note: TO / BIS / JUSQU'AU 28/02/2013 | | | |
| 2.1 | | > BASEPLATE_2x4/6/10/16V_E300_BOX_150 | 1 |
| 2.2 | 2028654 | > VIBRATION DAMPER D.50X30 M10X28 | 1 |
| 2.3 | 2028281 | > NUT M10 DIN936 (ISO4035) 17H VZ | 1 |
| 2.4 | 4197083 | > HOLDER PUMP Helix 10/16 KIT | 1 |
| 2.5 | 4197084 | > HOLDER SWITCHBOX WILO Smart Control KIT | 1 |
| 2.6 | 4197117 | > LIFTING Siboost HELIX SC KIT | 1 |
| 2 | 4199874 | BASE PLATE DE2 850x300 M10 KIT | 1 |
| Note: FROM / AB / À PARTIR DU 01/03/2013 - TO / BIS / JUSQU'AU 06/02/2014 | | | |
| 2.1 | | > BASEPLATE_2x4/6/10V_E300_850x300_BOX_150 | 1 |
| 2.2 | 2028654 | > VIBRATION DAMPER D.50X30 M10X28 | 1 |
| 2.3 | 2028281 | > NUT M10 DIN936 (ISO4035) 17H VZ | 1 |
| 2.4 | 4199875 | > HOLDER PUMP Siboost Helix V2/4 KIT | 1 |
| 2.5 | 4197084 | > HOLDER SWITCHBOX WILO Smart Control KIT | 1 |
| 2.6 | 4197085 | > LIFTING Siboost HELIX SC KIT | 1 |
| 2 | 4197122 | BASE PLATE DE2 850x300 M10 KIT | 1 |
| Note: FROM / AB / À PARTIR DU 07/02/2014 | | | |
| 2.1 | | > BASEPLATE_2x4/6/10V_E300_850x300_BOX_150 | 1 |
| 2.2 | 2028654 | > VIBRATION DAMPER D.50X30 M10X28 | 1 |
| 2.3 | 2028281 | > NUT M10 DIN936 (ISO4035) 17H VZ | 1 |
| 2.4 | 4197083 | > HOLDER PUMP Helix 10/16 KIT | 1 |
| 2.5 | 4197084 | > HOLDER SWITCHBOX WILO Smart Control KIT | 1 |
| 2.6 | 4197085 | > LIFTING Siboost HELIX SC KIT | 1 |
| 3 | 4197072 | SUCTION SIDE Siboost Helix10/16 KIT | 1 |
| 3.1 | 2032623 | > NUT G1 1/2"SW55 MS | 1 |
| 3.2 | 2032616 | > O-RING ID.44X3,53N DIN3771 E7502 | 1 |
| 3.2 | 2534877 | > BALL TAP KDW40-H G11/2I-I-DN40 DVGW | 1 |
| 3.4 | 2032626 | > OVAL FLANGE D52-LK100 ST-VZ | 1 |
| 3.5 | 2032627 | > UNION INSERT DN40 LAPPED FLANGE | 1 |

| Item | Article no. | Description | Quantity |
|---|---|---|---|
| 3.6 | 2032628 | > O-RING ID.56,52X5,33N DIN3771 E7502 | 1 |
| 4 | 4197074 | DELIVERY SIDE Siboost Helix V10 KIT | 1 |
| 3.1 | 2032623 | > NUT G1 1/2"SW55 MS | 1 |
| 3.2 | 2032616 | > O-RING ID.44X3,53N DIN3771 E7502 | 1 |
| 3.3 | 2534877 | > BALL TAP KDW40-H G11/2I-I-DN40 DVGW | 1 |
| 3.4 | 2032626 | > OVAL FLANGE D52-LK100 ST-VZ | 1 |
| 4.1 | 2054316 | > UNION INSERT DN40 LAPPED FLANGE(W.SLOT) | 1 |
| 4.2 | 2054317 | > HOUSING F.NON RETURN VALVE(RV-IN) DN40 | 1 |
| 4.3 | 2032631 | > NON-RETURN-DEVICE DN40 (MTR)TYP RV-IN | 1 |
| 3.6 | 2032628 | > O-RING ID.56,52X5,33N DIN3771 E7502 | 1 |
| 5 | 2032642 | DIAPHREM TANK 8L/PN16 DIN4807/T5 KIT | 1 |
| 5.1 | 2045914 | > DIAPHREM TANK 8L TYP-DD 16BAR | 1 |
| 5.2 | 2027853 | > FLOW FITTING G3/4 FOR DIAPHRAGM VES. | 1 |
| 6 | 4197076 | PRESSURE SENSOR/ GAUGE 0-16BAR KIT | 1 |
| 6.1 | 2085909 | > PRESS.SENSOR 1/4" 0-16BAR 4-20MA VP. | 1 |
| 6.2 | 4197077 | > T-PIECE 1/4" VP. | 1 |
| 6.3 | 2028692 | > PRESSURE GAUGE NG63-PN16-G1/4 | 1 |
| 6.4 | 2028291 | > BALL TAP R1/4" PN42 GIACOMINI R254DL | 1 |
| 6.5 | 2028691 | > BLOWGUN 1/4" MS 30BAR VP. | 1 |
| 7 | 4197123 | PIPE DE2 R21/2''-2x11/2"+1x1/4x600 VP. | 1 |
| 8 | 4197124 | PIPE DE2 R21/2''-2x11/2"+1x1/4+1x3/4x600 | 1 |
| 9 | | W-CTRL-SCE-B-2x2,2KW-T4-FM-ND2 | 1 |
| Note: TO / BIS / JUSQU'AU 28/02/2013 | | | |
| 9 | | W-CTRL-SCE-B-2x2,2-3,0KW-T4-FM-ND1 | 1 |
| Note: FROM / AB / À PARTIR DU 01/03/2013 - TO / BIS / JUSQU'AU 18/05/2014 | | | |
| 9 | 2541913 | W-CTRL-SCE-B-2x10A-T34-FM-ND1-AVC-PKG | 1 |
| Note: FROM / AB / À PARTIR DU 19/05/2014 | | | |
| 10 | 4197079 | PLUG G1/4"x10 AISI304 KIT | 1 |
| 11 | 2032654 | PLUG R3/4" MS VIEGA 1751 | 1 |
| 20 | 2521150 | ASSEMBLY WMS. DE-EB. +VP | 1 |
| 20.1 | 2028652 | > PRESSURE SWITCH PS3-ASR 1/(1,3) VP. | 1 |
| 20.2 | 2130983 | > PLUG PS3-415 WITH KABEL 1,5M 2NO VP. | 1 |
| 20.4 | 2028290 | > CROSSPIECE R1/4" MS-NICKEL | 1 |
| 20.5 | 2028687 | > PRESSURE GAUGE NG63 R1/4" HI.0-6BAR | 1 |

| Item | Article no. | Description | Quantity |
|---|---|---|---|
| 20.6 | 2054268 | > DUAL NIPPLE G1/4" x G1/4" MS VP. | 1 |
| 20.7 | 2028691 | > BLOWGUN 1/4" MS 30BAR VP. | 1 |
| 20.8 | 2028291 | > BALL TAP R1/4" PN42 GIACOMINI R254DL | 1 |

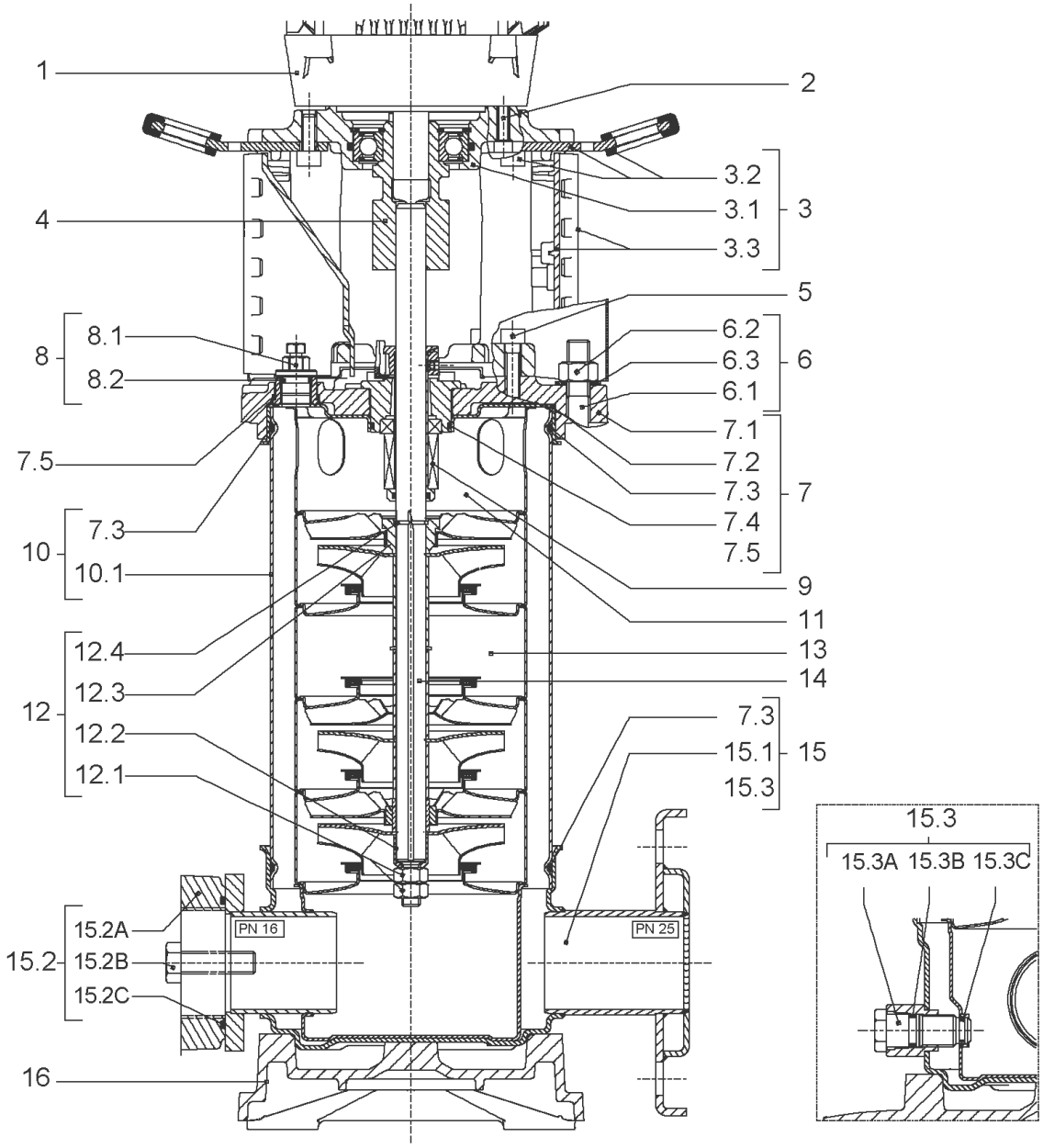
1
2
3.2
3.1
3
3.3
4
5
8.1
8
8.2
6.2
6.3
6
6.1
7.1
7.5
7.2
7.3
7
7.4
7.3
10
7.5
10.1
9
11
12.4
13
12.3
14
12
12.2
7.3
15.1
15
12.1
15.3
15.3
15.3A 15.3B 15.3C
15.2A
PN 16
PN 25
15.2
15.2B
15.2C
16

| Item | Article no. | Description | Quantity |
|---|---|---|---|
| 1 | | DRIVE HELIX-VE1004-IE2-WE KIT | 1 |
| Note: MOTOR BRAND WILO ELEC | | | |
| 1 | | DRIVE HELIX-VE1004-IE4-WE-KIT | 1 |
| Note: MOTOR BRAND WILO ELEC | | | |
| 2 | 4159703 | SCREW M8X40 (4 PIECES) | 1 |
| 3 | 4172795 | LANTERNE FT115 HELIX KIT | 1 |
| 3.1 | | > M+5_6_LANTERN_ONE-PIECE_FT115_CATA | 1 |
| 3.2 | 2127604 | > EYELET CPL.FT HELIX(2 PIECES) | 1 |
| 3.3 | 4159692 | > COUPLING PROTECTOR FT HELIX KIT | 1 |
| 4 | 4159709 | COUPLING D.16xD.24 FT115 HELIX KIT | 1 |
| 5 | 4159707 | SCREW M8X30 (4 PIECES) | 1 |
| 6 | 4177817 | STUD BOLT M12X341 KIT | 1 |
| 6.1 | | > TIE BOLT M12-341x18x30-1.4057 | 1 |
| 6.2 | 2094647 | > NUT M12 M12 ISO4032 VP. | 1 |
| 6.3 | 2123557 | > WASHER CS-12.4-24-1.6-NFE25 (4 PIECES) | 1 |
| 7 | 4210143 | STATIONARY RING HOLDER HELIX 6" EPDM | 1 |
| 7.2 | 2127607 | > STATIONARY RING HOLDER 6" HELIX 1.4301 V | 1 |
| 7.3 | 4176513 | > O-RING FOR PUMP JACKET VP. | 1 |
| 7.4 | 2127603 | > O-RING ID.37,6x2,4 EPDM VP. | 1 |
| 7.5 | 2127602 | > O-RING ID.21,35x2 EPDM VP. | 1 |
| 8 | 4159686 | FILING/PURGING PLUG HELIX EPDM KIT | 1 |
| 9 | 4171327 | SEAL-KIT-HELIX6-10-16 O/E KIT | 1 |
| 10 | 2127575 | HOUSING PIPE D.152x210 1.4301 KIT | 1 |
| 11 | 4172791 | CENTERING STAGE-RETURN HELIX10 1.4301VP. | 1 |
| 12 | 4209273 | SHAFT EQUIPMENT HELIX V10 KIT | 1 |
| 12.1 | | > NUT-H-M10-A4.70 | 1 |
| 12.2 | | > SERRATED LOCK WASHER M+10M3-316L | 1 |
| 12.3 | | > IMPELLER STOP RING L33,6-304 | 1 |
| 12.4 | | > STOP-RUSH-1/2-D16xd2-M+316 | 1 |
| 13 | | HYDRAULIC HELIX V 1004 1.4307 | 1 |
| 14 | 4177820 | SHAFTS Ø16X330 1. 4301 VP. | 1 |
| 15 | 4159682 | PUMP HOUSING HELIX DN50 PN16 1.4301 KIT | 1 |
| 7.3 | 4176513 | > O-RING FOR PUMP JACKET VP. | 1 |
| 15.1 | | > BLASTING PPE HOUSING V-PN16-DN50-304 | 1 |

| Item | Article no. | Description | Quantity |
|---|---|---|---|
| 15.2 | 4217893 | > COUNTER FLANGE-G1"1/2-PN16-GJL KIT | 1 |
| 15.3 | 4171321 | > PRIMING/DRAIN PLUG EPDM HELIX KIT | 1 |
| 16 | 4176517 | BASEPLATE V8/10 VP. | 1 |

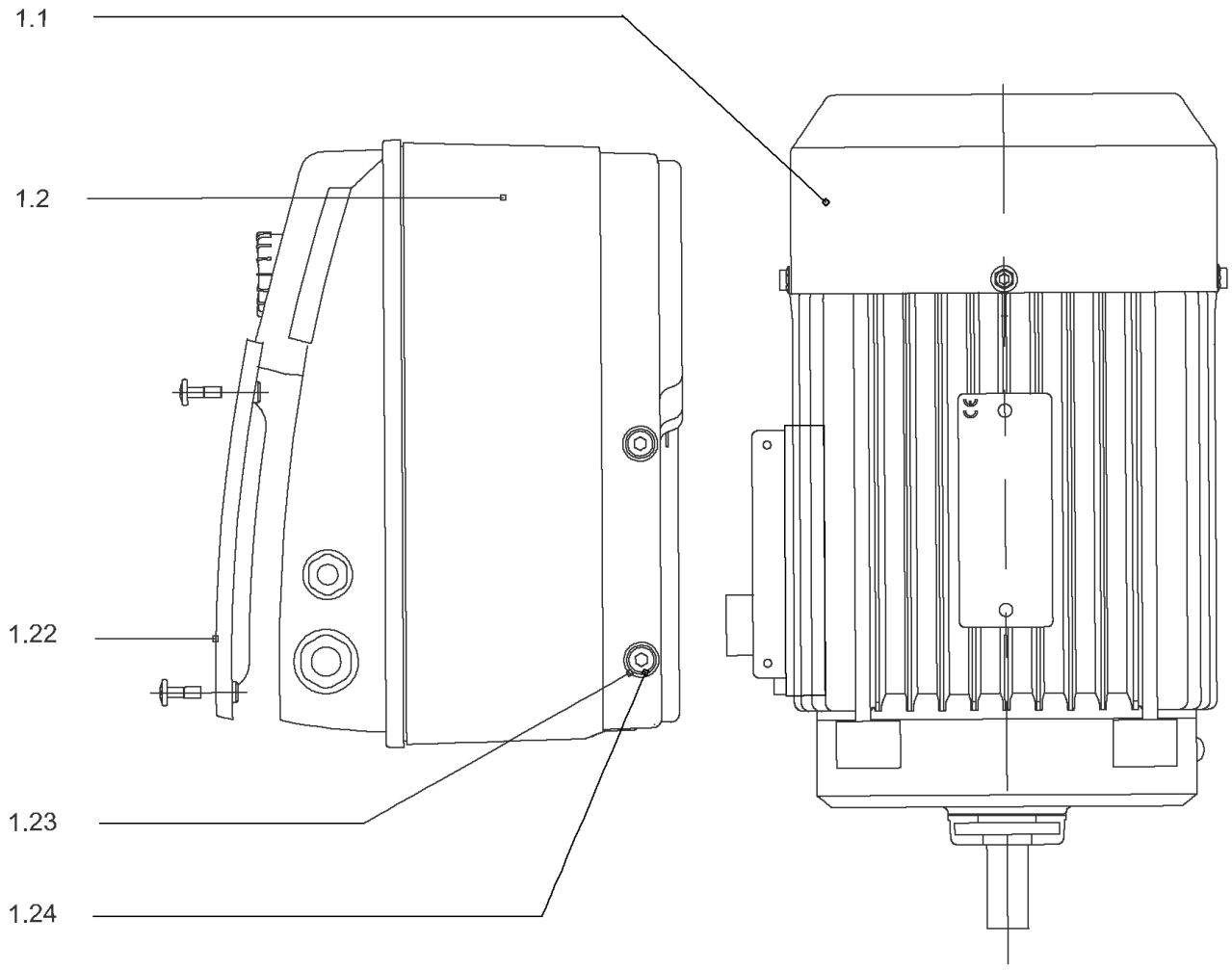
1.1
1.2
1.22
1.23
1.24

## DRIVE HELIX-VE1004-IE2-WE KIT

| Item | Article no. | Description | Quantity |
|---|---|---|---|
| 1.1 | 4185016 | MOTOR 2,2/2/90 3~ 380V 60HZ IE2 WE VP. | 1 |
| | | SPARE PARTS MOTOR:ON REQUEST | 1 |
| 1.2 | 4209650 | MODULE HELIX-VE1004-IE2-WE KIT | 1 |
| 1.22 | 2054227 | > MODULE COVER/GASKET TL3/4 KIT | 1 |
| 1.23 | 4215716 | > SCREW M5X16 DIN912 8.8 A2A (4pieces) VP. | 1 |
| 1.24 | 2057978 | > RONDELLE A5,3 DIN6797 FST ZN (4 PIECES) | 1 |

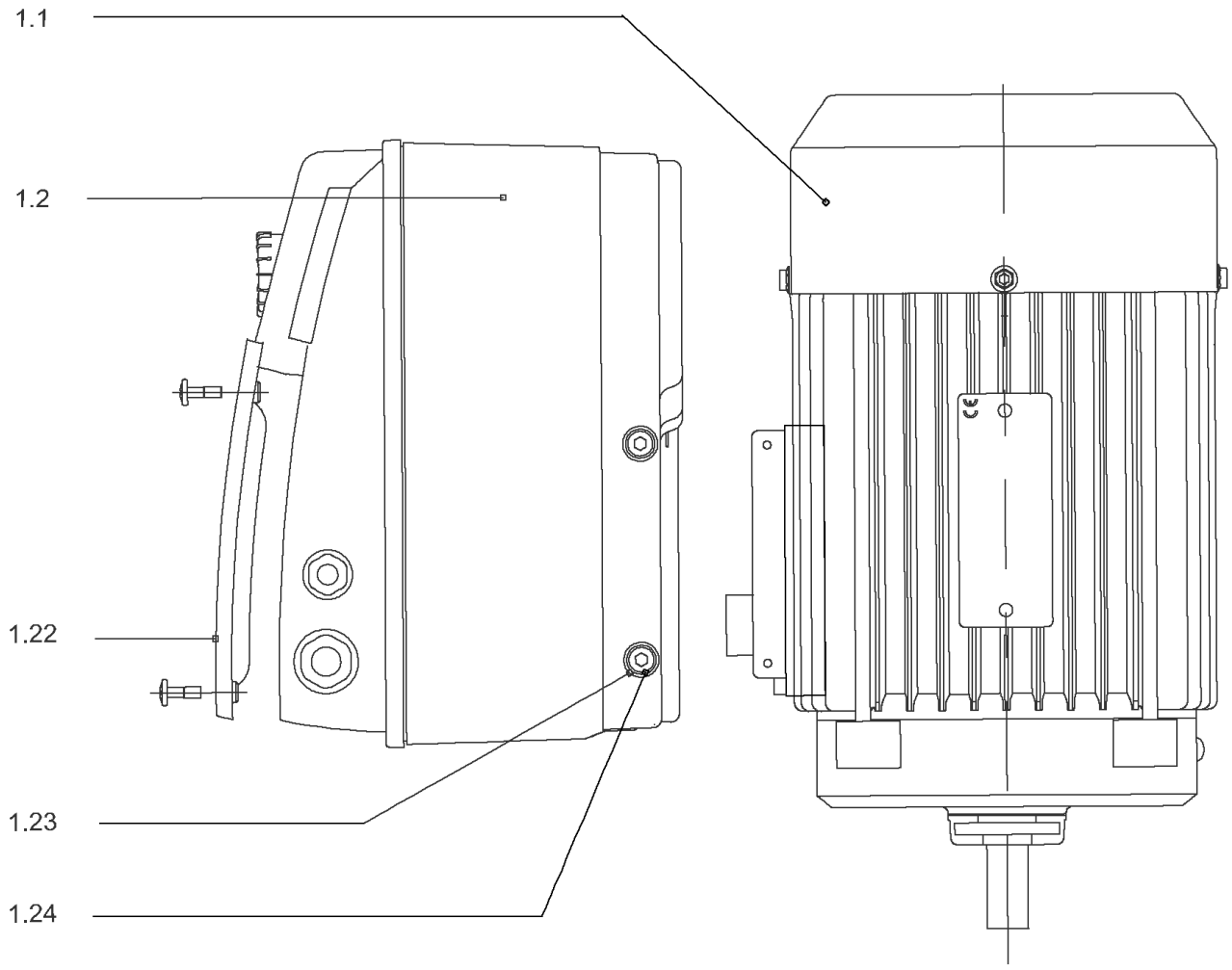
1.1
1.2
1.22
1.23
1.24

## DRIVE HELIX-VE1004-IE4-WE-KIT

| Item | Article no. | Description | Quantity |
|---|---|---|---|
| 1.1 | 4207920 | MOTOR 2.2/2/90 3~ 380V 60HZ IE4 WE VP. | 1 |
| | | SPARE PARTS MOTOR:ON REQUEST | 1 |
| 1.2 | 4209592 | MODULE HELIX-VE1004-IE4-WE KIT | 1 |
| 1.22 | 2054227 | > MODULE COVER/GASKET TL3/4 KIT | 1 |
| 1.23 | 4215716 | > SCREW M5X16 DIN912 8.8 A2A (4pieces) VP. | 1 |
| 1.24 | 2057978 | > RONDELLE A5,3 DIN6797 FST ZN (4 PIECES) | 1 |

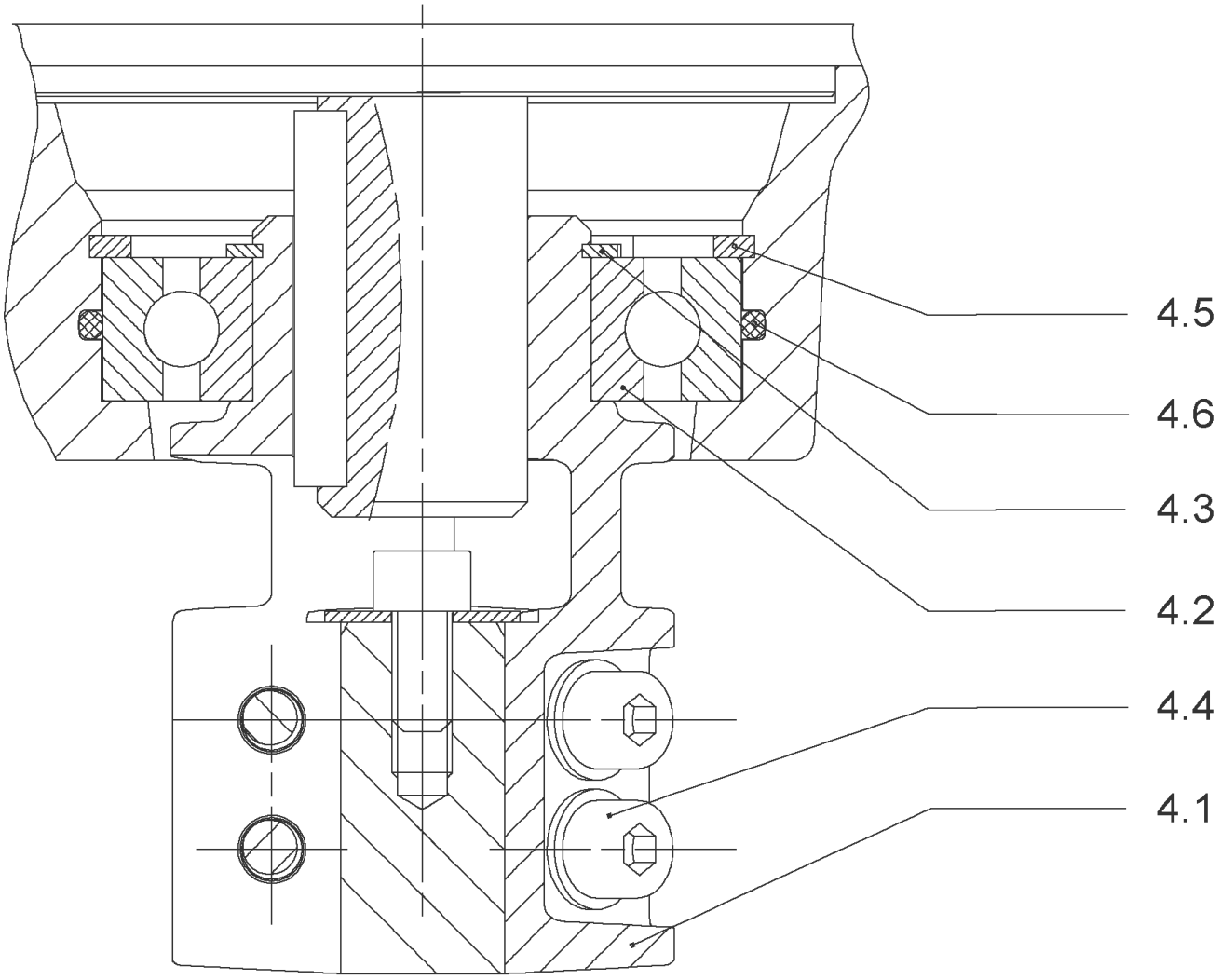
4.5
4.6
4.3
4.2
4.4
4.1

## COUPLING D.16xD.24 FT115 HELIX KIT (4159709)

| Item | Article no. | Description | Quantity |
|---|---|---|---|
| 4.1 | | COUPLING M+ Ø16XØ24 FT115 MACHINED | 1 |
| 4.2 | 2131023 | BALL BEARING 6207/ZZ-C3(HT)VP. | 1 |
| 4.3 | 4234254 | CIRCLIP-FOR-SHAFT-D35x1.5 VP. | 1 |
| 4.4 | 4157726 | SCREW KIT M8X30 (4 PIECES) | 1 |
| 4.5 | 4234251 | CIRCLIP-D72x2.5 VP. | 1 |
| 4.6 | 4234246 | O-RING 72X3 VP. | 1 |
| | | NOMEL CONTACT WASHER 8x16x1,4 STEEL ZC | 1 |

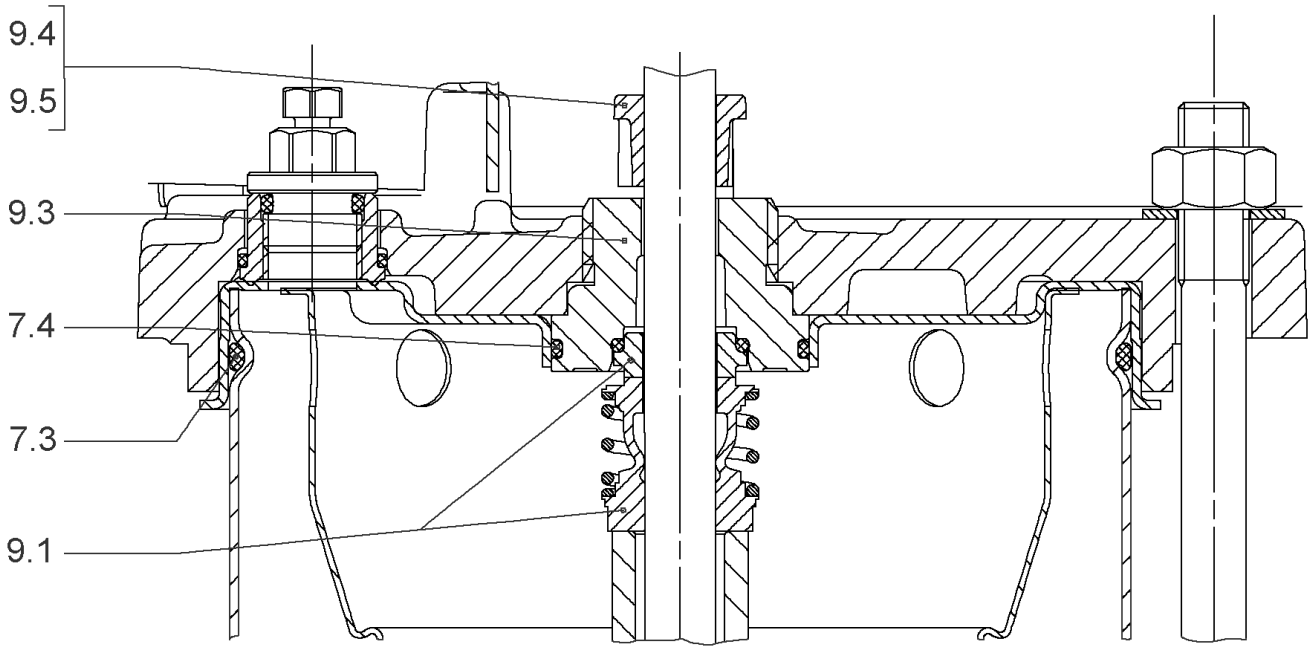
9.4
9.5
9.3
7.4
7.3
9.1

## SEAL-KIT-HELIX6-10-16 O/E KIT (4171327)

| Item | Article no. | Description | Quantity |
|---|---|---|---|
| 7.3 | 4176513 | O-RING FOR PUMP JACKET VP. | 1 |
| 7.4 | 2127603 | O-RING ID.37,6x2,4 EPDM VP. | 1 |
| 9.1 | 4177801 | MECH.SEAL HELIX6-10-16 O/E VP. | 1 |
| 9.3 | 4177798 | MACHINED RING HOLDER M+6" Ø16 304 VP. | 1 |
| 9.5 | 4177799 | MACHINED DRIVE RING Ø16 VP. | 1 |
| 9.4 | 4176520 | SCREW CH M5x5 A4-70 ( 3PIECES ) | 1 |

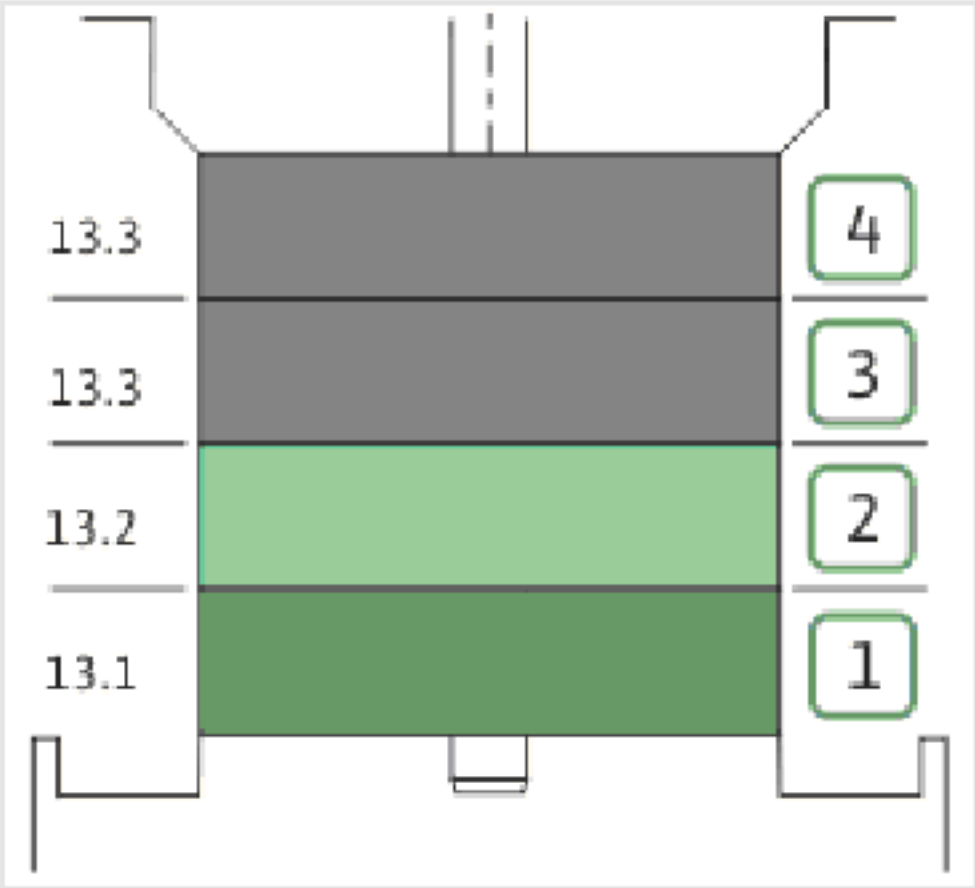
13.3
13.3
13.2
13.1
4
3
2
1

| Item | Article no. | Description | Quantity |
|---|---|---|---|
| 13.3 | 4172793 | INTERMEDIATE STAGE HELIX 10 1.4301 KIT | 1 |
| | | > MACH.STD-STG-CASING-WGV+NR-M+10-304 | 1 |
| | | > IMPELLER-M+10-304 | 1 |
| | | > IMPELLER SPACER Ø16,05X19,45-L36,465-304 | 1 |
| 13.2 | 4172792 | INTERMEDIATE STAGE HELIX 10 1.4301 KIT | 1 |
| | | > MACH.BEARING-STG-CASING-WNR-M+10-304 | 1 |
| | | > IMPELLER-M+10-304 | 1 |
| | | > SHAFT SLEEVE-SPACER-Ø19,35x18,465-304 | 1 |
| | | > SHAFT-SLEEVE-D16xD20x18-CW | 1 |
| 13.1 | 4171331 | STAGE HELIX10 1.4301KIT | 1 |
| | | > MACH.STG-CASING-WOGV-WNR-M+10-304 | 1 |
| | | > IMPELLER-M+10-304 | 1 |

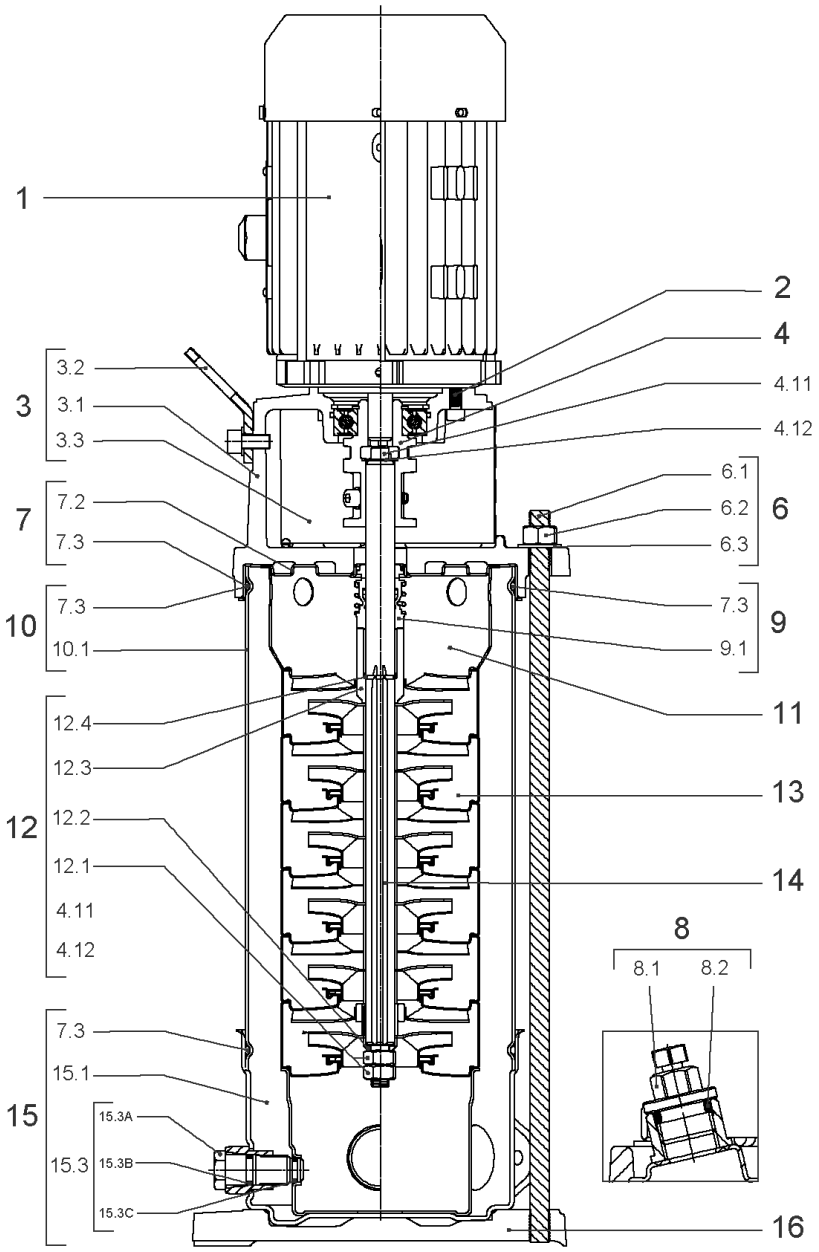
1
2
4
4.11
4.12
3
3.2
3.1
3.3
7
7.2
7.3
10
7.3
10.1
6
6.1
6.2
6.3
9
7.3
9.1
11
12
12.4
12.3
12.2
12.1
4.11
4.12
13
14
8
8.1
8.2
15
7.3
15.1
15.3
15.3A
15.3B
15.3C
16

## HELIX VE1004-1/16/E/S (4201551)

| Item | Article no. | Description | Quantity |
|---|---|---|---|
| 1 | | DRIVE HELIX-VE1004-IE4-WE-KIT | 1 |
| Note: MOTOR BRAND WILO ELEC | | | |
| | | SPARE PARTS MOTOR:ON REQUEST | 1 |
| 2 | 4159707 | SCREW M8X30 (4 PIECES) | 1 |
| 3 | 4213784 | LANTERN FT115 HELIX KIT | 1 |
| 3.1 | | > LANT-MOT-VMI-ReDTC6"-FT115-MACHINED+CATA | 1 |
| 3.2 | 4184852 | > EYELET CPL.FT HELIX (2 PIECES) | 1 |
| 3.3 | 4213782 | > COUPLING PROTECTOR FT115/130 HELIX KIT | 1 |
| 4 | 4159709 | COUPLING D.16xD.24 FT115 HELIX KIT | 1 |
| 6 | 4177817 | STUD BOLT M12X341 KIT | 1 |
| 6.1 | | > TIE BOLT M12-341x18x30-1.4057 | 1 |
| 6.2 | 2094647 | > NUT M12 M12 ISO4032 VP. | 1 |
| 6.3 | 2123557 | > WASHER CS-12.4-24-1.6-NFE25 (4 PIECES) | 1 |
| 7 | 4214481 | STATIONARY RING HOLDER HELIX D27 ReDTC | 1 |
| 7.2 | 4214479 | > STATIONARY RING HOLDER HELIX D27 VP. | 1 |
| 7.3 | 4176513 | > O-RING FOR PUMP JACKET VP. | 1 |
| 8 | 4212724 | FILING/PURGING PLUG HELIX ReDTC KIT | 1 |
| 8.1 | | > FILLING PLUG MVI6"-304 | 1 |
| 8.2 | 4177800 | > O-RING EPDM PLUG HELIX VP. | 1 |
| 9 | 4214483 | MECH.SEAL HELIX6-10-16 O/E ReDTC KIT | 1 |
| 9.1 | 4177801 | > MECH.SEAL HELIX6-10-16 O/E VP. | 1 |
| 7.3 | 4176513 | > O-RING FOR PUMP JACKET VP. | 1 |
| 10 | 4177818 | HOUSING PIPES Ø152-M+1004-304 KIT | 1 |
| 7.3 | 4176513 | > O-RING FOR PUMP JACKET VP. | 1 |
| 10.1 | | > HOUSING-PIPE Ø152-M+1004/1603-304 | 1 |
| 11 | 4172791 | CENTERING STAGE-RETURN HELIX10 1.4301VP. | 1 |
| 12 | 4214517 | SHAFT EQUIPMENT HELIX V10 ReDTC KIT | 1 |
| 12.1 | | > NUT-H-M10-A4.70 | 1 |
| 12.2 | | > SERRATED LOCK WASHER M+10M3-316L | 1 |
| 12.3 | | > 1/2-SNAP-RING-6/10M3-316L | 1 |
| 12.4 | | > STOP-RUSH-1/2-D16xd2-M+316 | 1 |
| 4.11 | | > SCREW CHC-M6X14-8.8-ISO4762-GEOMET500A | 1 |
| 4.12 | | > WASHER D.24 L6U ZINK | 1 |
| 13 | | HYDRAULIC HELIX V 1004 1.4307 | 1 |

## HELIX VE1004-1/16/E/S (4201551)

| Item | Article no. | Description | Quantity |
|---|---|---|---|
| 14 | 4214495 | SHAFT D.16X278 HELIX 1.4057 VP. | 1 |
| 15 | 4159682 | PUMP HOUSING HELIX DN50 PN16 1.4301 KIT | 1 |
| 7.3 | 4176513 | > O-RING FOR PUMP JACKET VP. | 1 |
| 15.1 | | > BLASTING PPE HOUSING V-PN16-DN50-304 | 1 |
| 15.2 | 4217893 | > COUNTER FLANGE-G1"1/2-PN16-GJL KIT | 1 |
| 15.3 | 4171321 | > PRIMING/DRAIN PLUG EPDM HELIX KIT | 1 |
| 16 | 4176517 | BASEPLATE V8/10 VP. | 1 |

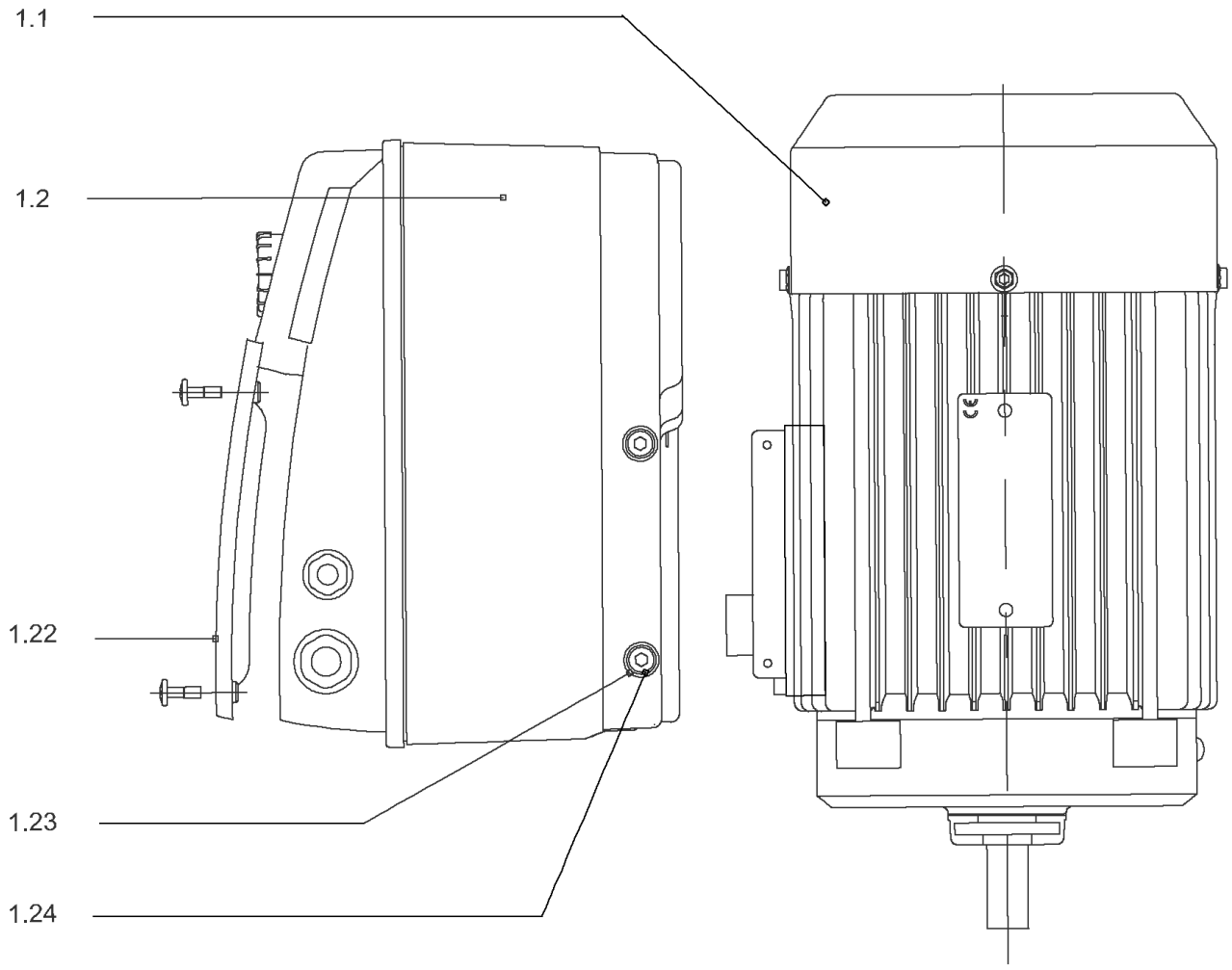
1.1
1.2
1.22
1.23
1.24

## DRIVE HELIX-VE1004-IE4-WE-KIT

| Item | Article no. | Description | Quantity |
|---|---|---|---|
| 1.1 | 4207920 | MOTOR 2.2/2/90 3~ 380V 60HZ IE4 WE VP. | 1 |
| | | SPARE PARTS MOTOR:ON REQUEST | 1 |
| 1.2 | 4209592 | MODULE HELIX-VE1004-IE4-WE KIT | 1 |
| 1.22 | 2054227 | > MODULE COVER/GASKET TL3/4 KIT | 1 |
| 1.23 | 4215716 | > SCREW M5X16 DIN912 8.8 A2A (4pieces) VP. | 1 |
| 1.24 | 2057978 | > RONDELLE A5,3 DIN6797 FST ZN (4 PIECES) | 1 |

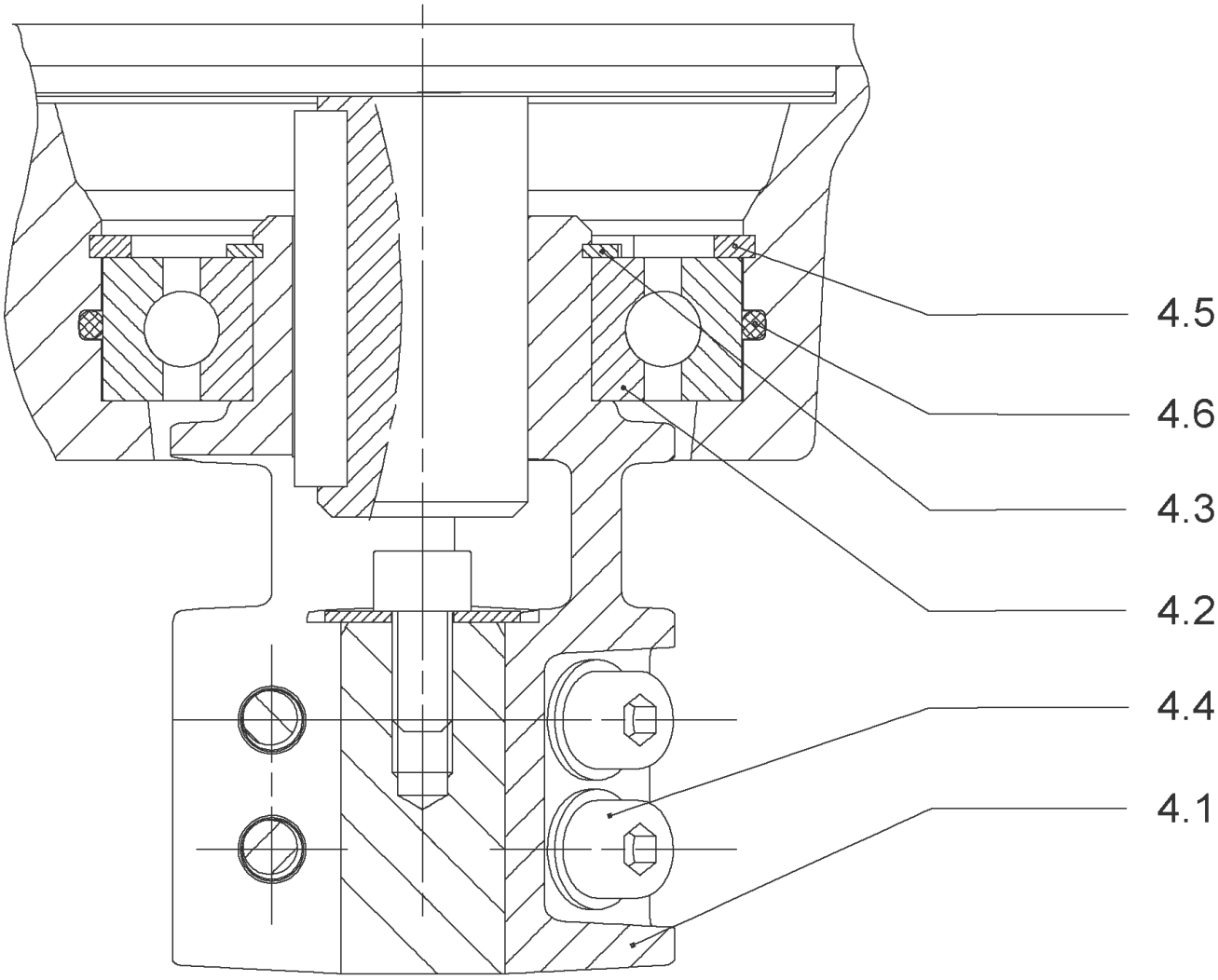
4.5
4.6
4.3
4.2
4.4
4.1

## COUPLING D.16xD.24 FT115 HELIX KIT (4159709)

| Item | Article no. | Description | Quantity |
|---|---|---|---|
| 4.1 | | COUPLING M+ Ø16XØ24 FT115 MACHINED | 1 |
| 4.2 | 2131023 | BALL BEARING 6207/ZZ-C3(HT)VP. | 1 |
| 4.3 | 4234254 | CIRCLIP-FOR-SHAFT-D35x1.5 VP. | 1 |
| 4.4 | 4157726 | SCREW KIT M8X30 (4 PIECES) | 1 |
| 4.5 | 4234251 | CIRCLIP-D72x2.5 VP. | 1 |
| 4.6 | 4234246 | O-RING 72X3 VP. | 1 |
| | | NOMEL CONTACT WASHER 8x16x1,4 STEEL ZC | 1 |

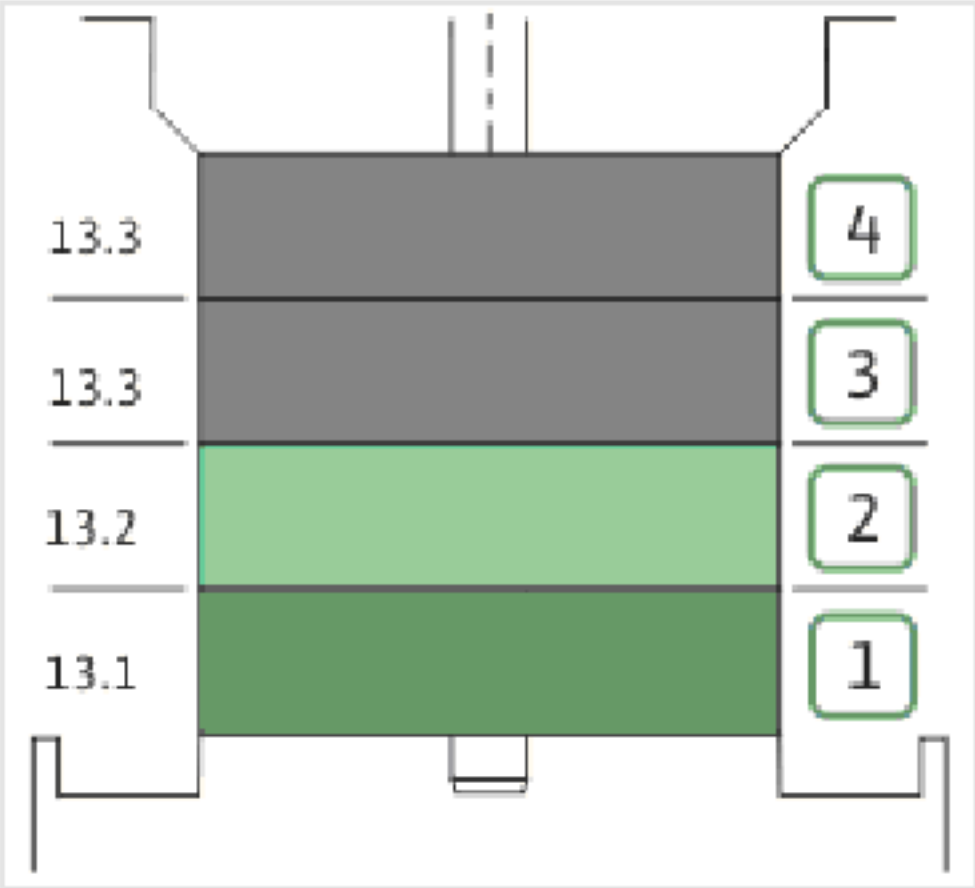
13.3
13.3
13.2
13.1
4
3
2
1

| Item | Article no. | Description | Quantity |
|---|---|---|---|
| 13.3 | 4172793 | INTERMEDIATE STAGE HELIX 10 1.4301 KIT | 1 |
| | | > MACH.STD-STG-CASING-WGV+NR-M+10-304 | 1 |
| | | > IMPELLER-M+10-304 | 1 |
| | | > IMPELLER SPACER Ø16,05X19,45-L36,465-304 | 1 |
| 13.2 | 4172792 | INTERMEDIATE STAGE HELIX 10 1.4301 KIT | 1 |
| | | > MACH.BEARING-STG-CASING-WNR-M+10-304 | 1 |
| | | > IMPELLER-M+10-304 | 1 |
| | | > SHAFT SLEEVE-SPACER-Ø19,35x18,465-304 | 1 |
| | | > SHAFT-SLEEVE-D16xD20x18-CW | 1 |
| 13.1 | 4171331 | STAGE HELIX10 1.4301KIT | 1 |
| | | > MACH.STG-CASING-WOGV-WNR-M+10-304 | 1 |
| | | > IMPELLER-M+10-304 | 1 |

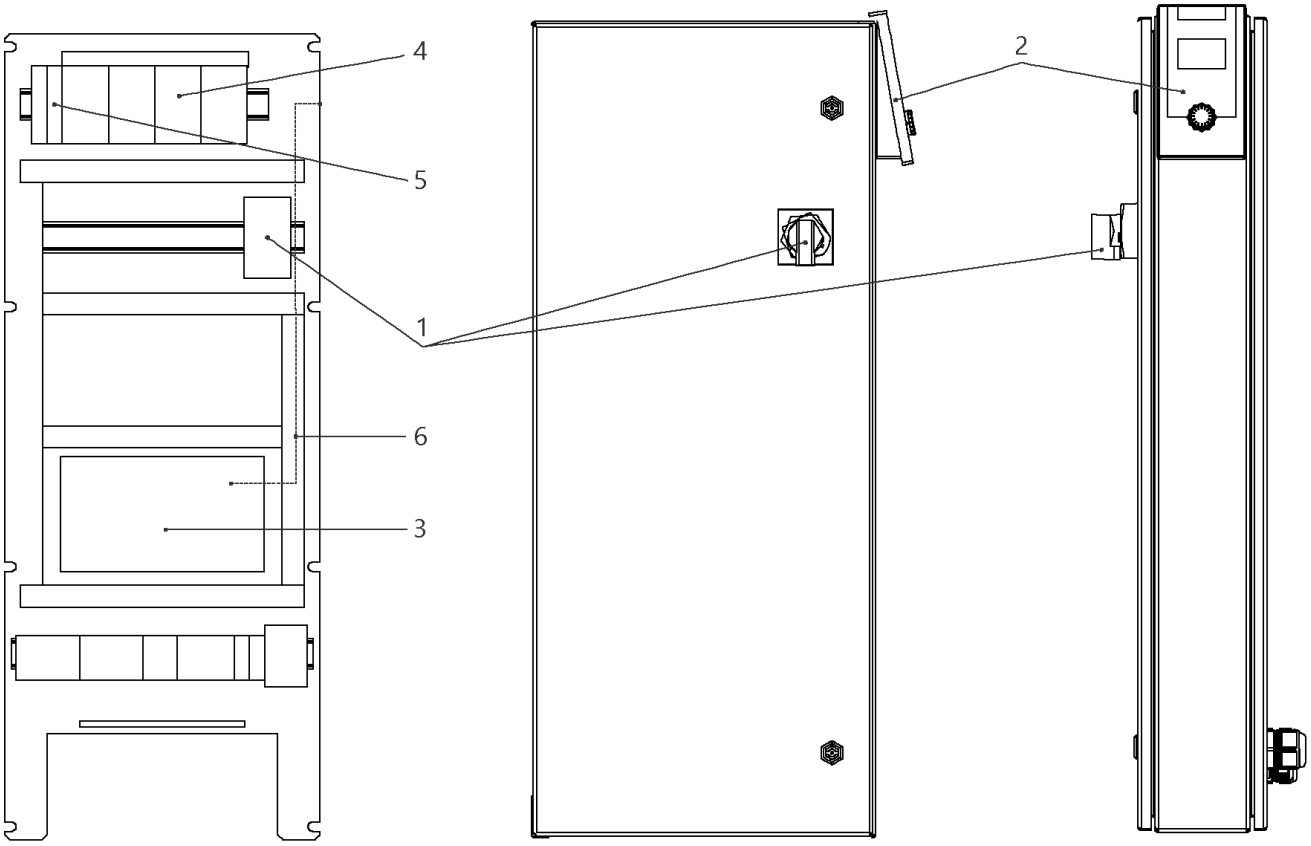
4
5
1
6
3
2

## W-CTRL-SCE-B-2x2,2KW-T4-FM-ND2

| Item | Article no. | Description | Quantity |
|---|---|---|---|
| 1 | 2104470 | MAIN SWITCH OT40F3 L250 KIT | 1 |
| 2 | 4184784 | CONTROL PANEL HMI SC KIT | 1 |
| 2 | 4185259 | ASSEMBLY DISPLAY SC PKG VP. | 1 |
| 3 | 4185257 | ASSEMBLY CPU SCe Booster VP. | 1 |
| 4 | 2051217 | AUTOM.CIRCUIT BREAKER S203 B16 TO7,5kW | 1 |
| 5 | 2046288 | CIRCUIT BREAKER S201 B16 | 1 |
| 6 | 4194956 | PATCH CABLE RJ45 CAT6 1,0M BLUE SC-PANEL | 1 |

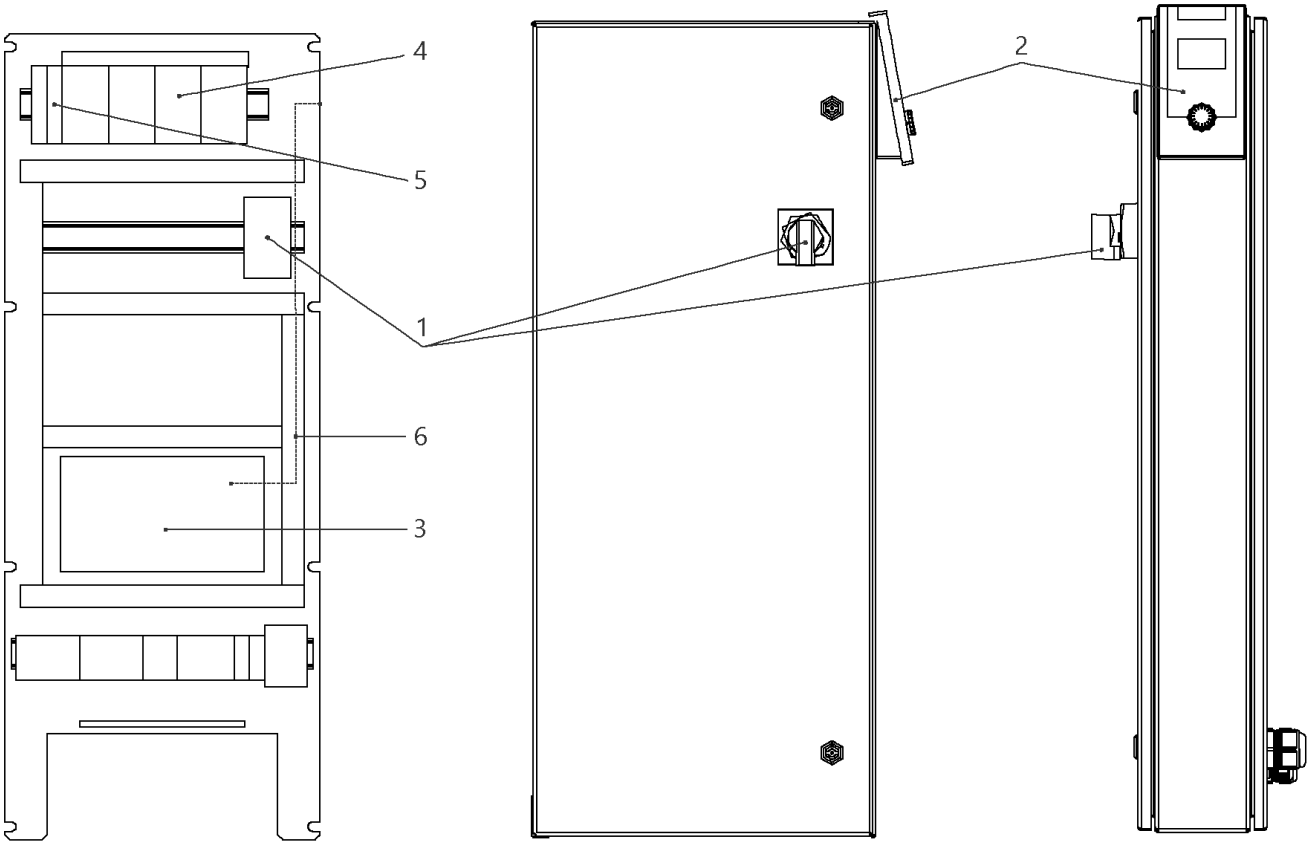
4
5
1
6
3
2

## W-CTRL-SCE-B-2x2,2-3,0KW-T4-FM-ND1

| Item | Article no. | Description | Quantity |
|---|---|---|---|
| 1 | 2104470 | MAIN SWITCH OT40F3 L250 KIT | 1 |
| 2 | 4184784 | CONTROL PANEL HMI SC KIT | 1 |
| 2 | 4185259 | ASSEMBLY DISPLAY SC PKG VP. | 1 |
| 3 | 4185257 | ASSEMBLY CPU SCe Booster VP. | 1 |
| 4 | 2051217 | AUTOM.CIRCUIT BREAKER S203 B16 TO7,5kW | 1 |
| 5 | 2046288 | CIRCUIT BREAKER S201 B16 | 1 |
| 6 | 4197081 | CABLE RJ45 CAT6 0,5M RED SC-PANEL VP. | 1 |

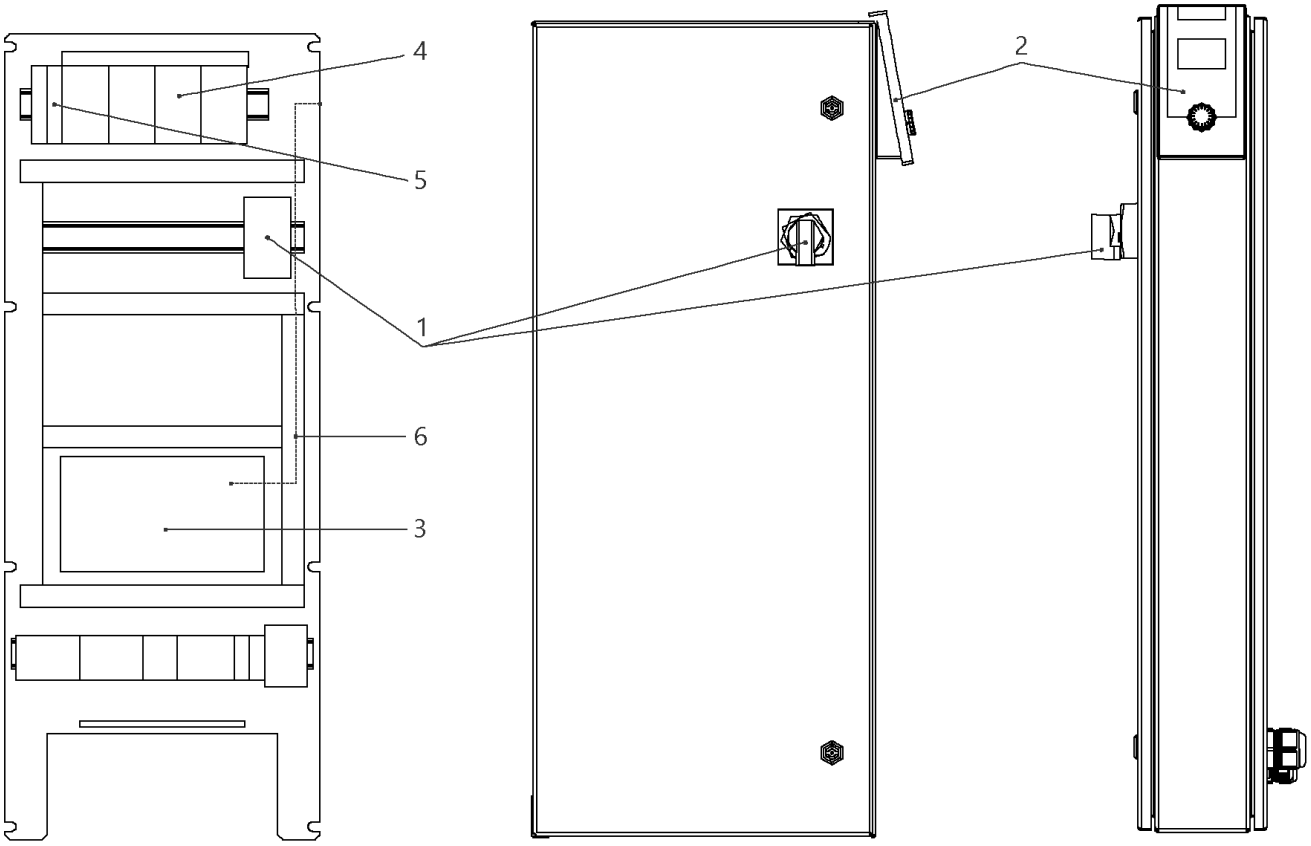
4
5
1
6
3
2

## W-CTRL-SCE-B-2x10A-T34-FM-ND1-AVC-PKG (2541913)

| Item | Article no. | Description | Quantity |
|---|---|---|---|
| 1 | 2104470 | MAIN SWITCH OT40F3 L250 KIT | 1 |
| 2 | 4184784 | CONTROL PANEL HMI SC KIT | 1 |
| 2 | 4185259 | ASSEMBLY DISPLAY SC PKG VP. | 1 |
| Note: DISPLAY ALONE / PLATINE SEULE | | | |
| 3 | 4185257 | ASSEMBLY CPU SCe Booster VP. | 1 |
| 4 | 2119861 | AUTOMATIC CIRCUIT BREAKER S203 B13 3POL. | 1 |
| 5 | 2046288 | CIRCUIT BREAKER S201 B16 | 1 |
| 6 | 4197081 | CABLE RJ45 CAT6 0,5M RED SC-PANEL VP. | 1 |

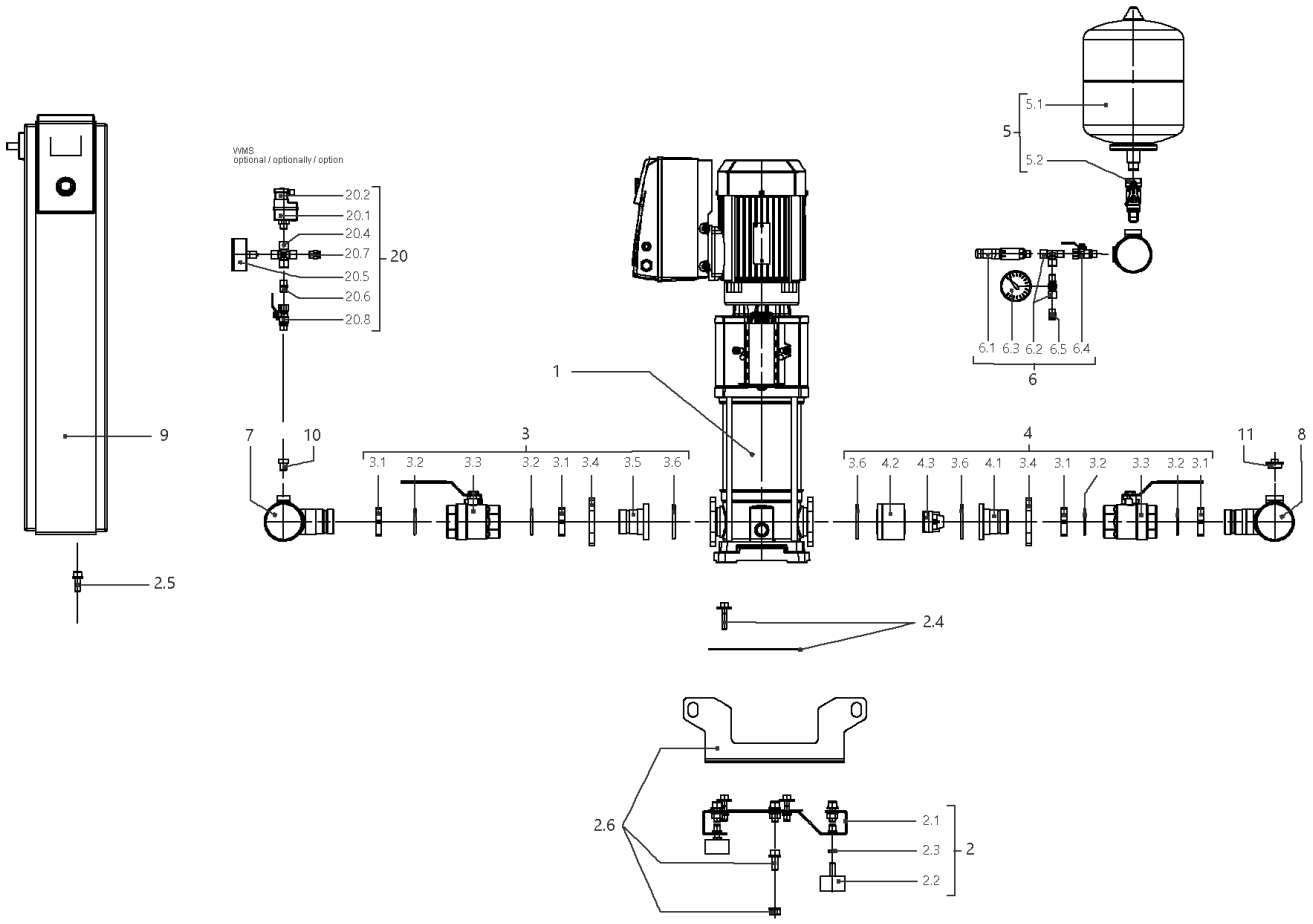
VVMS
optional / optionally / option
20.2
20.1
20.4
20.7
20.5
20.6
20.8
20
5.1
5
5.2
6.1 6.3 6.2 6.5 6.4
6
1
9
7
10
3
3.1 3.2 3.3 3.2 3.1 3.4 3.5 3.6
4
3.6 4.2 4.3 3.6 4.1 3.4 3.1 3.2 3.3 3.2 3.1
11
8
2.5
2.4
2.6
2.1
2.3
2.2
2

## SiBoost Smart 2HELIX VE1005 (2537336)

| Item | Article no. | Description | Quantity |
|---|---|---|---|
| 1 | | HELIX VE1005-1/16/E/S | 1 |
| Note: TO / BIS / JUSQU'AU 30/04/2016 | | | |
| 1 | 4201553 | HELIX VE1005-1/16/E/S | 1 |
| Note: FROM / AB / À PARTIR DU 01/05/2016 | | | |
| 2 | 4197125 | BASE PLATE DE2 850x420 KIT | 1 |
| 2.1 | | > BASEPLATE_2x4/6/10/16V_E300_BOX_150 | 1 |
| 2.2 | 2028654 | > VIBRATION DAMPER D.50X30 M10X28 | 1 |
| 2.3 | 2028281 | > NUT M10 DIN936 (ISO4035) 17H VZ | 1 |
| 2.4 | 4197083 | > HOLDER PUMP Helix 10/16 KIT | 1 |
| 2.5 | 4197084 | > HOLDER SWITCHBOX WILO Smart Control KIT | 1 |
| 2.6 | 4197117 | > LIFTING Siboost HELIX SC KIT | 1 |
| 3 | 4197072 | SUCTION SIDE Siboost Helix10/16 KIT | 1 |
| 3.1 | 2032623 | > NUT G1 1/2"SW55 MS | 1 |
| 3.2 | 2032616 | > O-RING ID.44X3,53N DIN3771 E7502 | 1 |
| 3.2 | 2534877 | > BALL TAP KDW40-H G11/2I-I-DN40 DVGW | 1 |
| 3.4 | 2032626 | > OVAL FLANGE D52-LK100 ST-VZ | 1 |
| 3.5 | 2032627 | > UNION INSERT DN40 LAPPED FLANGE | 1 |
| 3.6 | 2032628 | > O-RING ID.56,52X5,33N DIN3771 E7502 | 1 |
| 4 | 4197074 | DELIVERY SIDE Siboost Helix V10 KIT | 1 |
| 3.1 | 2032623 | > NUT G1 1/2"SW55 MS | 1 |
| 3.2 | 2032616 | > O-RING ID.44X3,53N DIN3771 E7502 | 1 |
| 3.3 | 2534877 | > BALL TAP KDW40-H G11/2I-I-DN40 DVGW | 1 |
| 3.4 | 2032626 | > OVAL FLANGE D52-LK100 ST-VZ | 1 |
| 4.1 | 2054316 | > UNION INSERT DN40 LAPPED FLANGE(W.SLOT) | 1 |
| 4.2 | 2054317 | > HOUSING F.NON RETURN VALVE(RV-IN) DN40 | 1 |
| 4.3 | 2032631 | > NON-RETURN-DEVICE DN40 (MTR)TYP RV-IN | 1 |
| 3.6 | 2032628 | > O-RING ID.56,52X5,33N DIN3771 E7502 | 1 |
| 5 | 2032642 | DIAPHREM TANK 8L/PN16 DIN4807/T5 KIT | 1 |
| 5.1 | 2045914 | > DIAPHREM TANK 8L TYP-DD 16BAR | 1 |
| 5.2 | 2027853 | > FLOW FITTING G3/4 FOR DIAPHRAGM VES. | 1 |
| 6 | 4197076 | PRESSURE SENSOR/ GAUGE 0-16BAR KIT | 1 |
| 6.1 | 2085909 | > PRESS.SENSOR 1/4" 0-16BAR 4-20MA VP. | 1 |
| 6.2 | 4197077 | > T-PIECE 1/4" VP. | 1 |
| 6.3 | 2028692 | > PRESSURE GAUGE NG63-PN16-G1/4 | 1 |

| Item | Article no. | Description | Quantity |
|---|---|---|---|
| 6.4 | 2028291 | > BALL TAP R1/4" PN42 GIACOMINI R254DL | 1 |
| 6.5 | 2028691 | > BLOWGUN 1/4" MS 30BAR VP. | 1 |
| 7 | 4197123 | PIPE DE2 R21/2''-2x11/2"+1x1/4x600 VP. | 1 |
| 8 | 4197124 | PIPE DE2 R21/2''-2x11/2"+1x1/4+1x3/4x600 | 1 |
| 9 | | W-CTRL-SCE-B-2x4,0KW-T4-FM-ND2 | 1 |
| Note: TO / BIS / JUSQU'AU 18/05/2014 | | | |
| 9 | 2541905 | W-CTRL-SCE-B-2x13A-T34-FM-ND2-AVC-PKG | 1 |
| Note: FROM / AB / À PARTIR DU 19/05/2014 | | | |
| 10 | 4197079 | PLUG G1/4"x10 AISI304 KIT | 1 |
| 11 | 2032654 | PLUG R3/4" MS VIEGA 1751 | 1 |
| 20 | 2521150 | ASSEMBLY WMS. DE-EB. +VP | 1 |
| 20.1 | 2028652 | > PRESSURE SWITCH PS3-ASR 1/(1,3) VP. | 1 |
| 20.2 | 2130983 | > PLUG PS3-415 WITH KABEL 1,5M 2NO VP. | 1 |
| 20.4 | 2028290 | > CROSSPIECE R1/4" MS-NICKEL | 1 |
| 20.5 | 2028687 | > PRESSURE GAUGE NG63 R1/4" HI.0-6BAR | 1 |
| 20.6 | 2054268 | > DUAL NIPPLE G1/4" x G1/4" MS VP. | 1 |
| 20.7 | 2028691 | > BLOWGUN 1/4" MS 30BAR VP. | 1 |
| 20.8 | 2028291 | > BALL TAP R1/4" PN42 GIACOMINI R254DL | 1 |

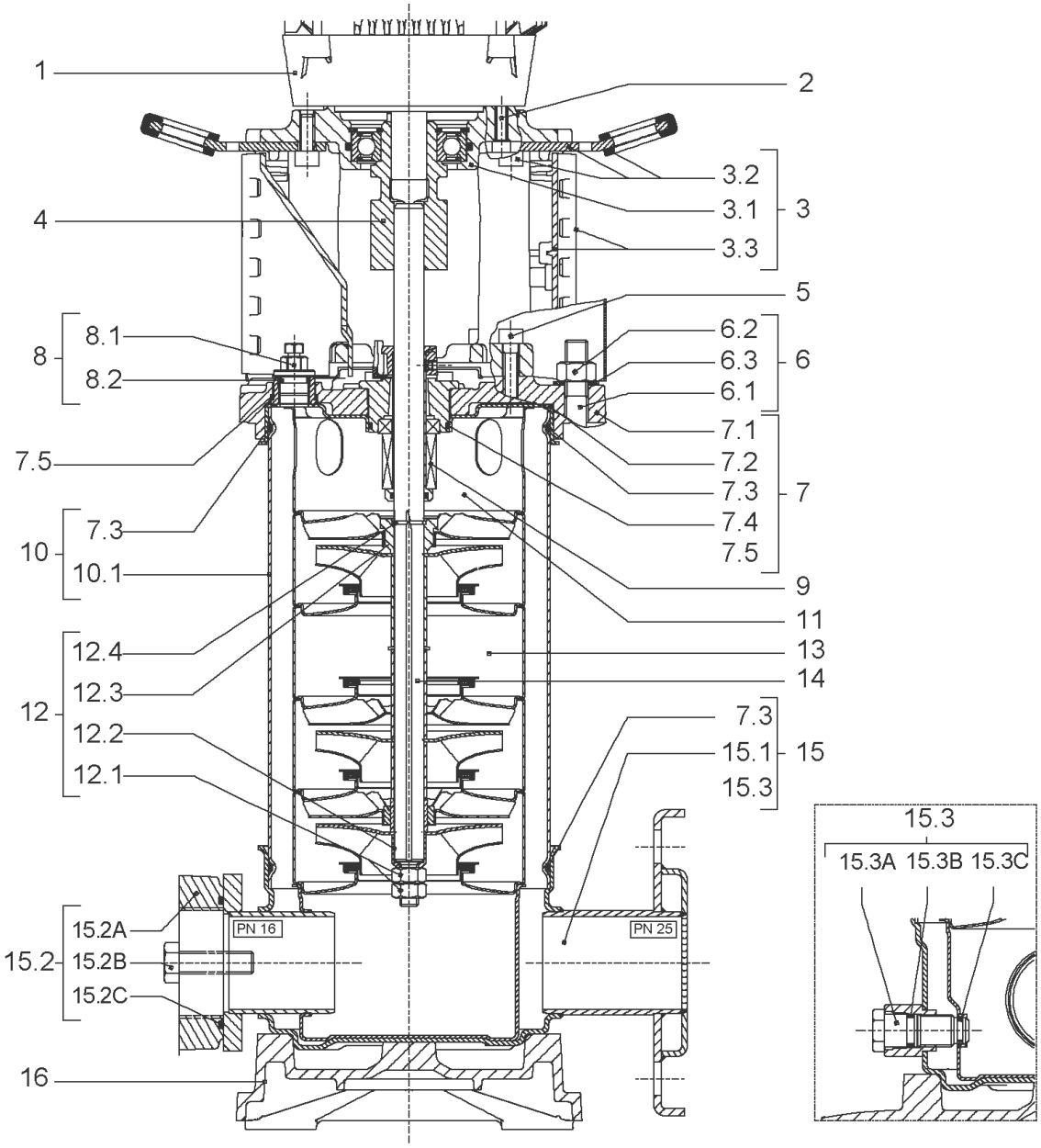
1
2
3.2
3.1
3
3.3
4
5
8.1
8
8.2
6.2
6.3
6
6.1
7.1
7.2
7.5
7.3
7
7.4
7.3
10
7.5
10.1
9
11
12.4
13
12.3
14
12
12.2
7.3
15.1
15
12.1
15.3
15.3
15.3A 15.3B 15.3C
15.2A
PN 16
PN 25
15.2
15.2B
15.2C
16

| Item | Article no. | Description | Quantity |
|---|---|---|---|
| 1 | | DRIVE HELIX-VE1005IE2-WE KIT | 1 |
| Note: MOTOR BRAND WILO ELEC | | | |
| 1 | | DRIVE HELIX-VE1005-IE4-WE-KIT | 1 |
| Note: MOTOR BRAND WILO ELEC | | | |
| 2 | 4206025 | SCREW M8X45 (4 PIECES) | 1 |
| 3 | 4172789 | LANTERN FT130 HELIX V10 KIT | 1 |
| 3.1 | | > M+5_6_LANTERN_ONE-PIECE_FT130_CATA | 1 |
| 3.2 | 2127604 | > EYELET CPL.FT HELIX(2 PIECES) | 1 |
| 3.3 | 4159692 | > COUPLING PROTECTOR FT HELIX KIT | 1 |
| 4 | 4159710 | COUPLING D.16XD.28 FT130 HELIX KIT | 1 |
| 5 | 4159707 | SCREW M8X30 (4 PIECES) | 1 |
| 6 | 2018576 | STUD BOLT M12X377 KIT | 1 |
| 6.1 | | > TIE BOLT M12-377x18x30-1.4057 | 1 |
| 6.2 | 2094647 | > NUT M12 M12 ISO4032 VP. | 1 |
| 6.3 | 2123557 | > WASHER CS-12.4-24-1.6-NFE25 (4 PIECES) | 1 |
| 7 | 4210143 | STATIONARY RING HOLDER HELIX 6" EPDM | 1 |
| 7.2 | 2127607 | > STATIONARY RING HOLDER 6" HELIX 1.4301 V | 1 |
| 7.3 | 4176513 | > O-RING FOR PUMP JACKET VP. | 1 |
| 7.4 | 2127603 | > O-RING ID.37,6x2,4 EPDM VP. | 1 |
| 7.5 | 2127602 | > O-RING ID.21,35x2 EPDM VP. | 1 |
| 8 | 4159686 | FILING/PURGING PLUG HELIX EPDM KIT | 1 |
| 9 | 4171327 | SEAL-KIT-HELIX6-10-16 O/E KIT | 1 |
| 10 | 4176518 | HOUSING PIPES D.152X247 1.4301 KIT | 1 |
| 7.3 | 4176513 | > O-RING FOR PUMP JACKET VP. | 1 |
| 10.1 | | > HOUSING-PIPE Ø152-M+1005-304 | 1 |
| 11 | 4172791 | CENTERING STAGE-RETURN HELIX10 1.4301VP. | 1 |
| 12 | 4209273 | SHAFT EQUIPMENT HELIX V10 KIT | 1 |
| 12.1 | | > NUT-H-M10-A4.70 | 1 |
| 12.2 | | > SERRATED LOCK WASHER M+10M3-316L | 1 |
| 12.3 | | > IMPELLER STOP RING L33,6-304 | 1 |
| 12.4 | | > STOP-RUSH-1/2-D16xd2-M+316 | 1 |
| 13 | | HYDRAULIC HELIX V 1005 1.4307 | 1 |
| 14 | 4176515 | SHAFT D.16 X367,5 1. 4301 VP. | 1 |
| 15 | 4159682 | PUMP HOUSING HELIX DN50 PN16 1.4301 KIT | 1 |

| Item | Article no. | Description | Quantity |
|---|---|---|---|
| 7.3 | 4176513 | > O-RING FOR PUMP JACKET VP. | 1 |
| 15.1 | | > BLASTING PPE HOUSING V-PN16-DN50-304 | 1 |
| 15.2 | 4217893 | > COUNTER FLANGE-G1"1/2-PN16-GJL KIT | 1 |
| 15.3 | 4171321 | > PRIMING/DRAIN PLUG EPDM HELIX KIT | 1 |
| 16 | 4176517 | BASEPLATE V8/10 VP. | 1 |

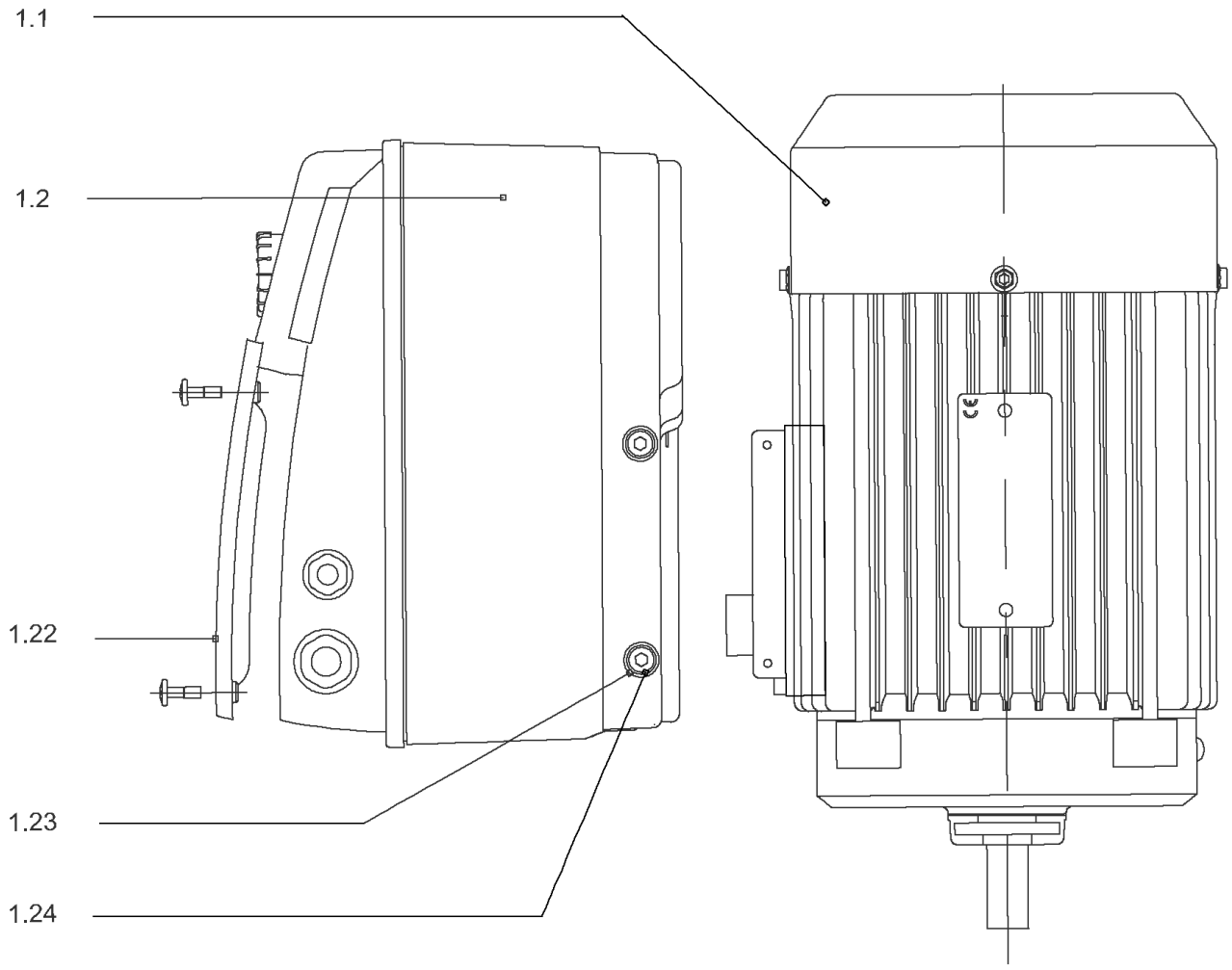
1.1
1.2
1.22
1.23
1.24

## DRIVE HELIX-VE1005IE2-WE KIT

| Item | Article no. | Description | Quantity |
|---|---|---|---|
| 1.1 | | M3-T638P55V18H-100F13-SU-N28-WE-IE2 VP. | 1 |
| Note: no longer available/nicht mehrlieferbar/n'est plus disponible | | | |
| | | SPARE PARTS MOTOR:ON REQUEST | 1 |
| 1.2 | 4190202 | MODULE HELIX-VE1005-IE2-WE KIT | 1 |
| 1.22 | 2054227 | > MODULE COVER/GASKET TL3/4 KIT | 1 |
| 1.23 | 4215716 | > SCREW M5X16 DIN912 8.8 A2A (4pieces) VP. | 1 |
| 1.24 | 2057978 | > RONDELLE A5,3 DIN6797 FST ZN (4 PIECES) | 1 |

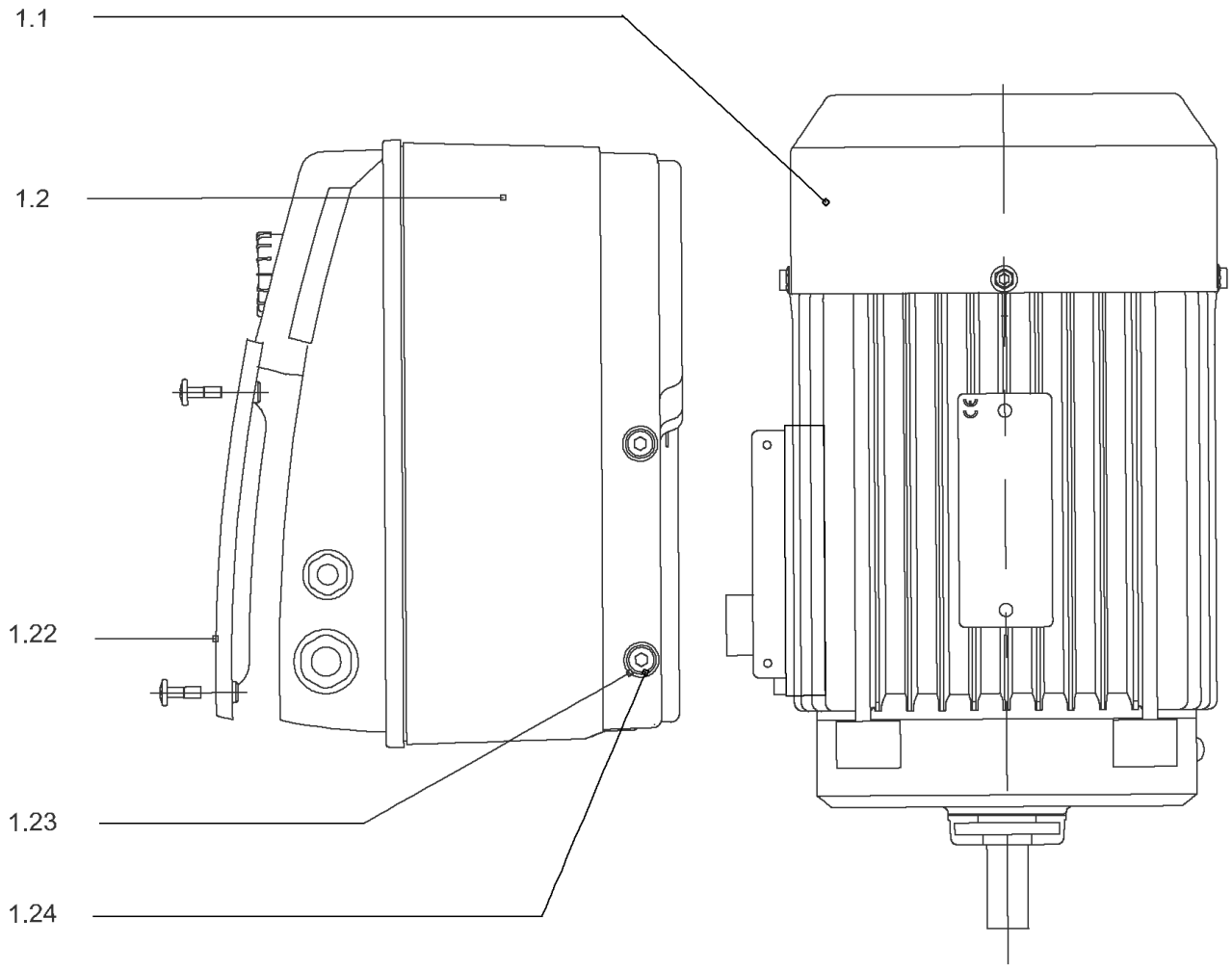
1.1
1.2
1.22
1.23
1.24

## DRIVE HELIX-VE1005-IE4-WE-KIT

| Item | Article no. | Description | Quantity |
|---|---|---|---|
| 1.1 | 4207922 | MOTOR 3/2/100 3~ 380V 60HZ IE4 WE VP. | 1 |
| | | SPARE PARTS MOTOR:ON REQUEST | 1 |
| 1.2 | 4209339 | MODULE HELIX-VE1005-IE4-WE KIT | 1 |
| 1.22 | 2054227 | > MODULE COVER/GASKET TL3/4 KIT | 1 |
| 1.23 | 4215716 | > SCREW M5X16 DIN912 8.8 A2A (4pieces) VP. | 1 |
| 1.24 | 2057978 | > RONDELLE A5,3 DIN6797 FST ZN (4 PIECES) | 1 |

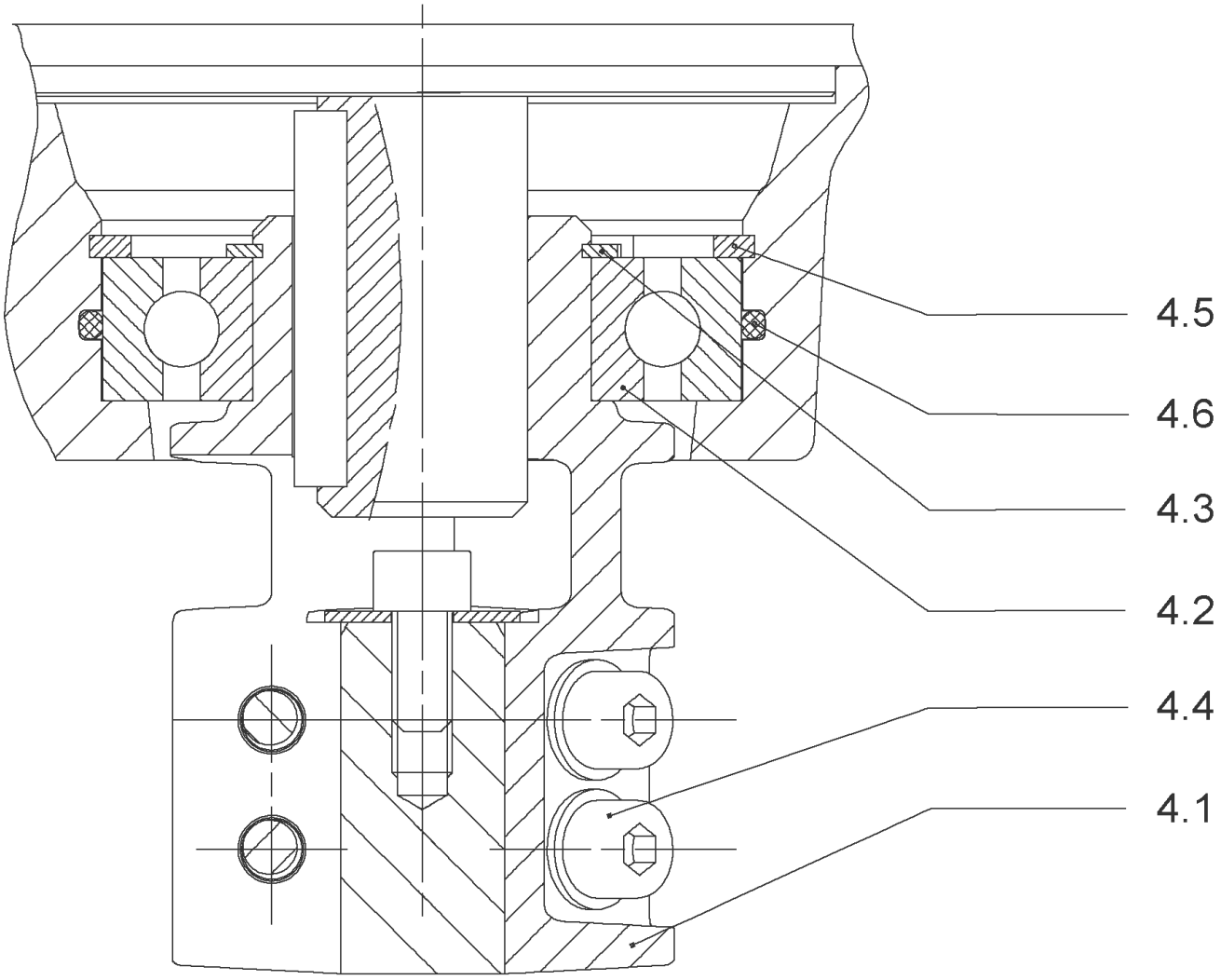
4.5
4.6
4.3
4.2
4.4
4.1

## COUPLING D.16XD.28 FT130 HELIX KIT (4159710)

| Item | Article no. | Description | Quantity |
|---|---|---|---|
| 4.1 | | COUPLING M+ Ø16XØ28 FT130 MACHINED | 1 |
| 4.2 | 2131022 | BALL BEARING 6209/ZZ-C3(HT)VP. | 1 |
| 4.3 | 4233930 | CIRCLIP-FOR-BORES-D45x1,75 VP. | 1 |
| 4.4 | 4157726 | SCREW KIT M8X30 (4 PIECES) | 1 |
| 4.5 | 4234252 | CIRCLIPS 85X3 VP. | 1 |
| 4.6 | 4234243 | O-RING 85X3 VP. | 1 |
| | | NOMEL CONTACT WASHER 8x16x1,4 STEEL ZC | 1 |

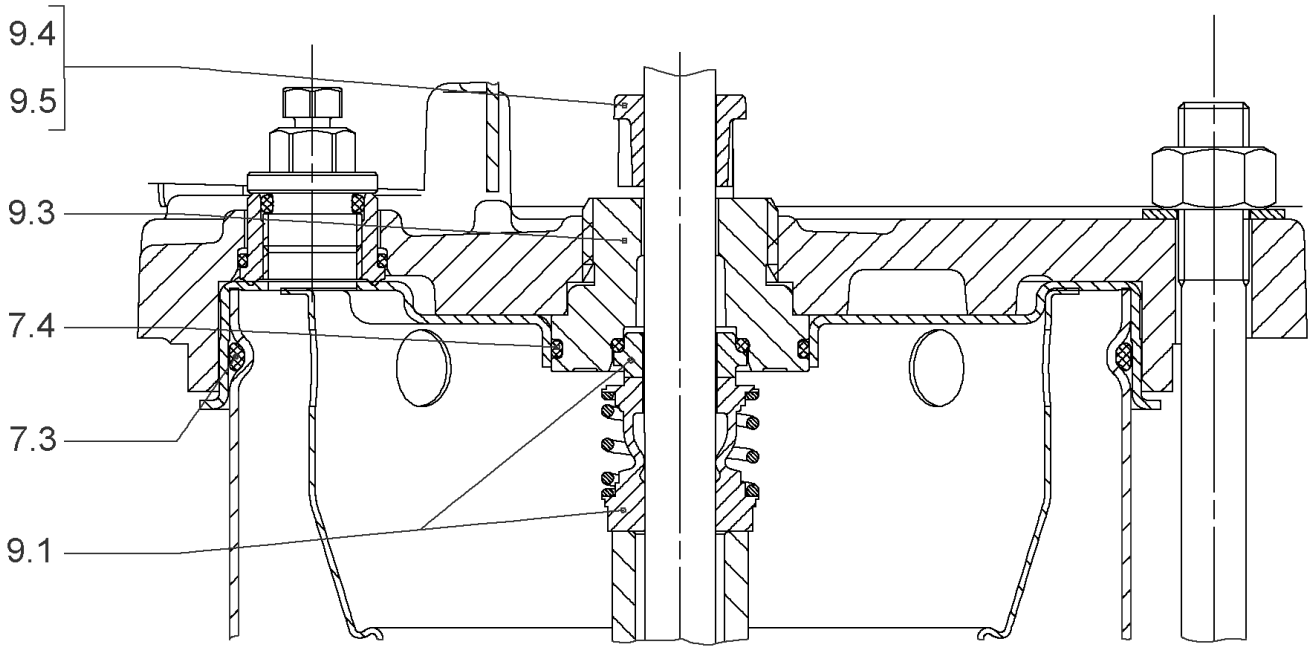
9.4
9.5
9.3
7.4
7.3
9.1

## SEAL-KIT-HELIX6-10-16 O/E KIT (4171327)

| Item | Article no. | Description | Quantity |
|---|---|---|---|
| 7.3 | 4176513 | O-RING FOR PUMP JACKET VP. | 1 |
| 7.4 | 2127603 | O-RING ID.37,6x2,4 EPDM VP. | 1 |
| 9.1 | 4177801 | MECH.SEAL HELIX6-10-16 O/E VP. | 1 |
| 9.3 | 4177798 | MACHINED RING HOLDER M+6" Ø16 304 VP. | 1 |
| 9.5 | 4177799 | MACHINED DRIVE RING Ø16 VP. | 1 |
| 9.4 | 4176520 | SCREW CH M5x5 A4-70 ( 3PIECES ) | 1 |

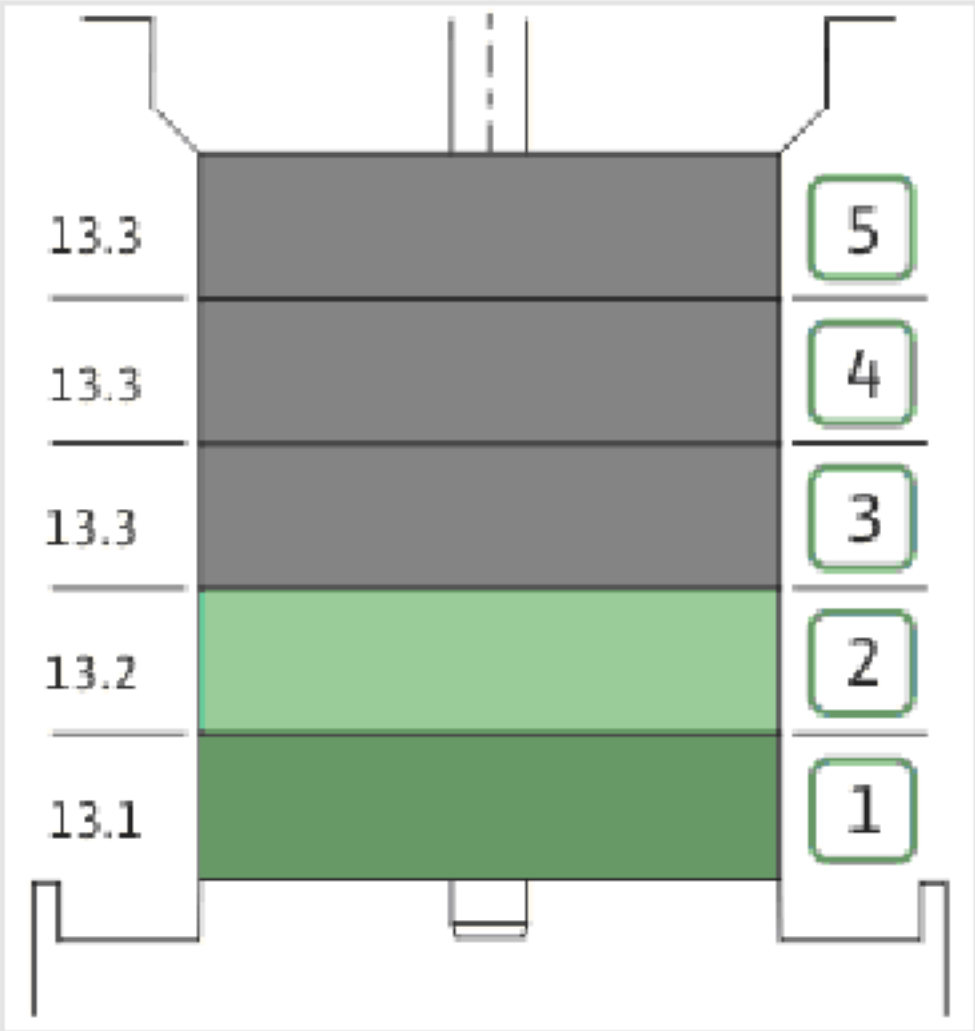
13.3
13.3
13.3
13.2
13.1
5
4
3
2
1

| Item | Article no. | Description | Quantity |
|---|---|---|---|
| 13.1 | 4171331 | STAGE HELIX10 1.4301KIT | 1 |
| | | > MACH.STG-CASING-WOGV-WNR-M+10-304 | 1 |
| | | > IMPELLER-M+10-304 | 1 |
| 13.2 | 4172792 | INTERMEDIATE STAGE HELIX 10 1.4301 KIT | 1 |
| | | > MACH.BEARING-STG-CASING-WNR-M+10-304 | 1 |
| | | > IMPELLER-M+10-304 | 1 |
| | | > SHAFT SLEEVE-SPACER-Ø19,35x18,465-304 | 1 |
| | | > SHAFT-SLEEVE-D16xD20x18-CW | 1 |
| 13.3 | 4172793 | INTERMEDIATE STAGE HELIX 10 1.4301 KIT | 1 |
| | | > MACH.STD-STG-CASING-WGV+NR-M+10-304 | 1 |
| | | > IMPELLER-M+10-304 | 1 |
| | | > IMPELLER SPACER Ø16,05X19,45-L36,465-304 | 1 |

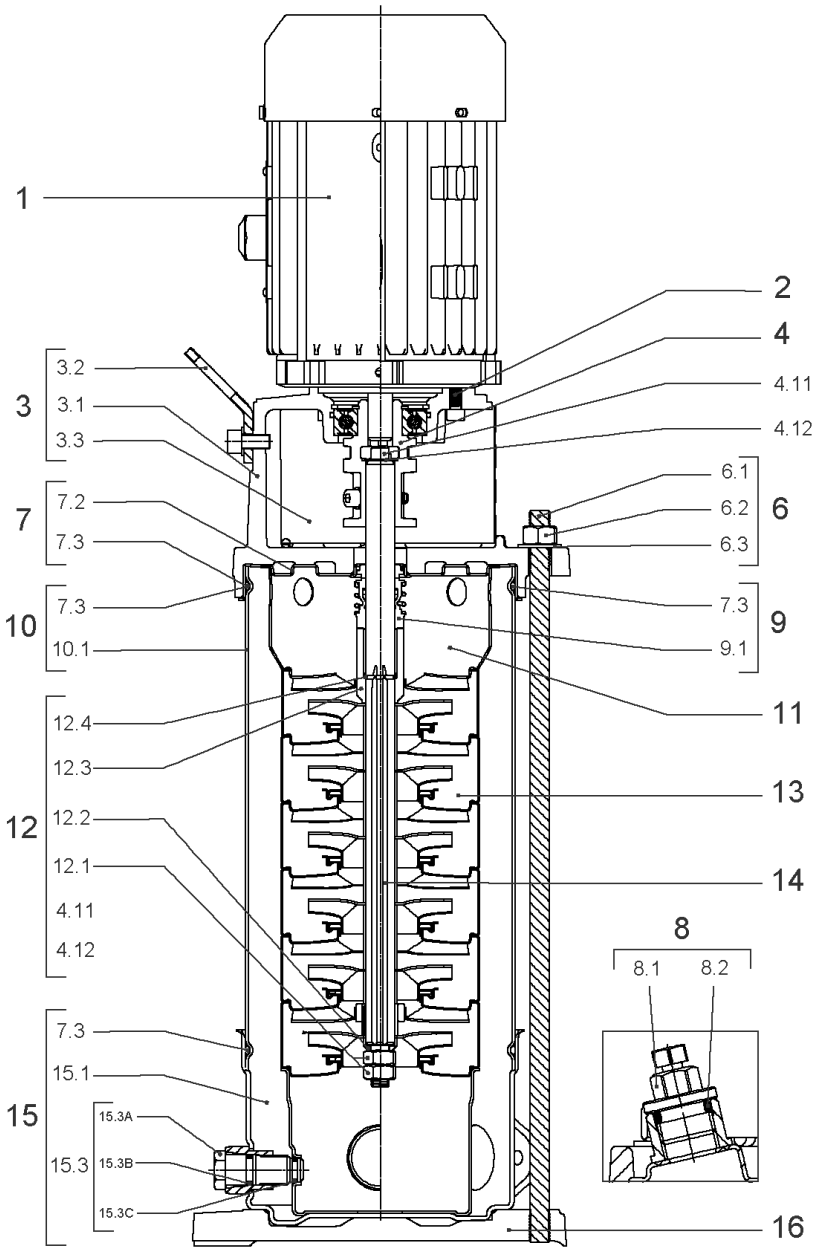
1
2
4
4.11
4.12
3
3.2
3.1
3.3
7
7.2
7.3
10
7.3
10.1
6
6.1
6.2
6.3
9
7.3
9.1
11
12
12.4
12.3
12.2
12.1
4.11
4.12
13
14
8
8.1
8.2
15
7.3
15.1
15.3
15.3A
15.3B
15.3C
16

## HELIX VE1005-1/16/E/S (4201553)

| Item | Article no. | Description | Quantity |
|---|---|---|---|
| 1 | | DRIVE HELIX-VE1005-IE4-WE-KIT | 1 |
| Note: MOTOR BRAND WILO ELEC | | | |
| | | SPARE PARTS MOTOR:ON REQUEST | 1 |
| 2 | 4159707 | SCREW M8X30 (4 PIECES) | 1 |
| 3 | 4214473 | LANTERN FT130 HELIX KIT | 1 |
| 3.1 | | > LANT-MOT-VMI-ReDTC6"-FT130-MACHINED+CATA | 1 |
| 3.2 | 4184852 | > EYELET CPL.FT HELIX (2 PIECES) | 1 |
| 3.3 | 4213782 | > COUPLING PROTECTOR FT115/130 HELIX KIT | 1 |
| 4 | 4159710 | COUPLING D.16XD.28 FT130 HELIX KIT | 1 |
| 6 | 2018576 | STUD BOLT M12X377 KIT | 1 |
| 6.1 | | > TIE BOLT M12-377x18x30-1.4057 | 1 |
| 6.2 | 2094647 | > NUT M12 M12 ISO4032 VP. | 1 |
| 6.3 | 2123557 | > WASHER CS-12.4-24-1.6-NFE25 (4 PIECES) | 1 |
| 7 | 4214481 | STATIONARY RING HOLDER HELIX D27 ReDTC | 1 |
| 7.2 | 4214479 | > STATIONARY RING HOLDER HELIX D27 VP. | 1 |
| 7.3 | 4176513 | > O-RING FOR PUMP JACKET VP. | 1 |
| 8 | 4212724 | FILING/PURGING PLUG HELIX ReDTC KIT | 1 |
| 8.1 | | > FILLING PLUG MVI6"-304 | 1 |
| 8.2 | 4177800 | > O-RING EPDM PLUG HELIX VP. | 1 |
| 9 | 4214483 | MECH.SEAL HELIX6-10-16 O/E ReDTC KIT | 1 |
| 9.1 | 4177801 | > MECH.SEAL HELIX6-10-16 O/E VP. | 1 |
| 7.3 | 4176513 | > O-RING FOR PUMP JACKET VP. | 1 |
| 10 | 4176518 | HOUSING PIPES D.152X247 1.4301 KIT | 1 |
| 7.3 | 4176513 | > O-RING FOR PUMP JACKET VP. | 1 |
| 10.1 | | > HOUSING-PIPE Ø152-M+1005-304 | 1 |
| 11 | 4172791 | CENTERING STAGE-RETURN HELIX10 1.4301VP. | 1 |
| 12 | 4214517 | SHAFT EQUIPMENT HELIX V10 ReDTC KIT | 1 |
| 12.1 | | > NUT-H-M10-A4.70 | 1 |
| 12.2 | | > SERRATED LOCK WASHER M+10M3-316L | 1 |
| 12.3 | | > 1/2-SNAP-RING-6/10M3-316L | 1 |
| 12.4 | | > STOP-RUSH-1/2-D16xd2-M+316 | 1 |
| 4.11 | | > SCREW CHC-M6X14-8.8-ISO4762-GEOMET500A | 1 |
| 4.12 | | > WASHER D.24 L6U ZINK | 1 |
| 13 | | HYDRAULIC HELIX V 1005 1.4307 | 1 |

| Item | Article no. | Description | Quantity |
|---|---|---|---|
| 14 | 4214498 | SHAFT D.16X316 HELIX 1.4057 VP. | 1 |
| 15 | 4159682 | PUMP HOUSING HELIX DN50 PN16 1.4301 KIT | 1 |
| 7.3 | 4176513 | > O-RING FOR PUMP JACKET VP. | 1 |
| 15.1 | | > BLASTING PPE HOUSING V-PN16-DN50-304 | 1 |
| 15.2 | 4217893 | > COUNTER FLANGE-G1"1/2-PN16-GJL KIT | 1 |
| 15.3 | 4171321 | > PRIMING/DRAIN PLUG EPDM HELIX KIT | 1 |
| 16 | 4176517 | BASEPLATE V8/10 VP. | 1 |

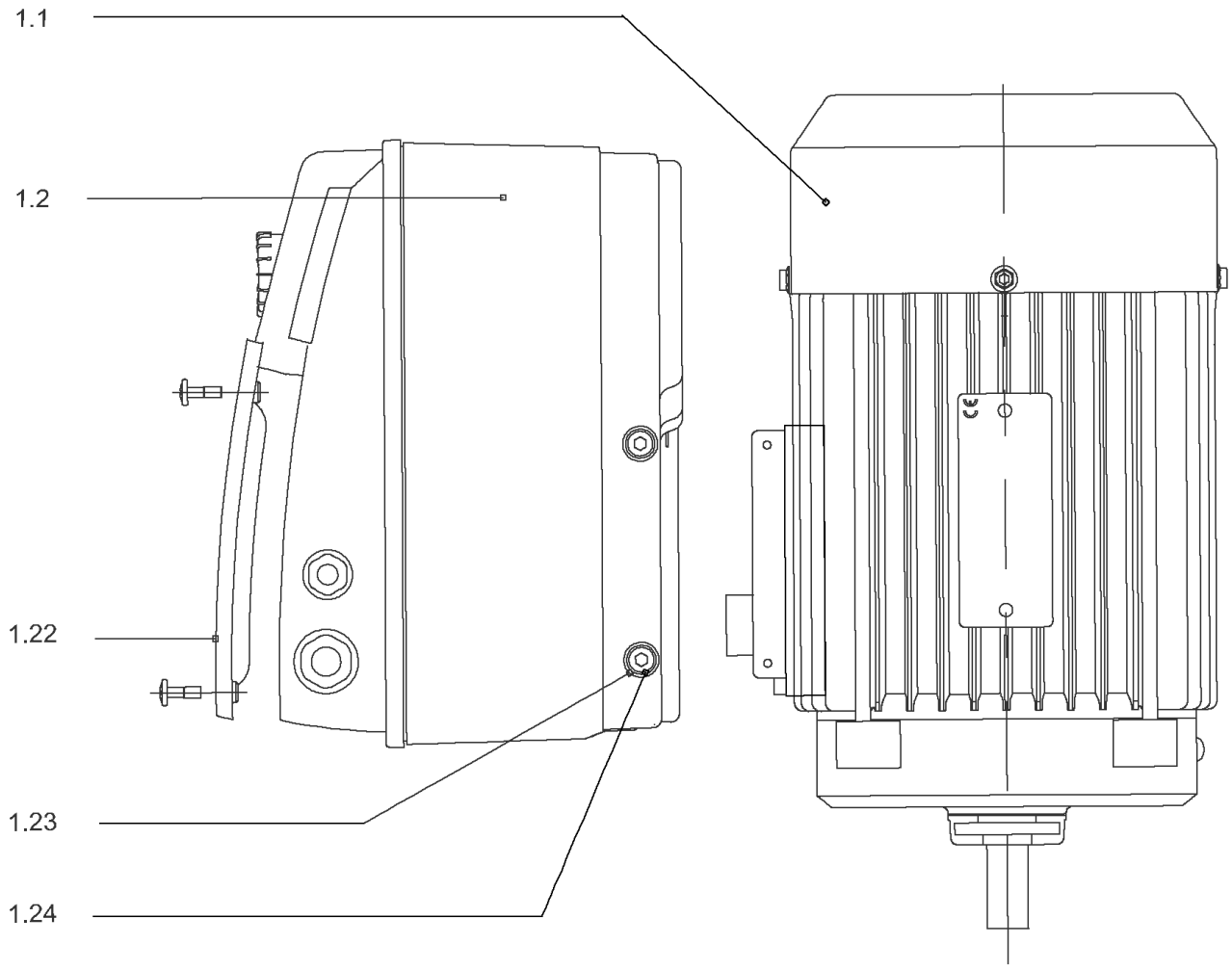
1.1
1.2
1.22
1.23
1.24

## DRIVE HELIX-VE1005-IE4-WE-KIT

| Item | Article no. | Description | Quantity |
|---|---|---|---|
| 1.1 | 4207922 | MOTOR 3/2/100 3~ 380V 60HZ IE4 WE VP. | 1 |
| | | SPARE PARTS MOTOR:ON REQUEST | 1 |
| 1.2 | 4209339 | MODULE HELIX-VE1005-IE4-WE KIT | 1 |
| 1.22 | 2054227 | > MODULE COVER/GASKET TL3/4 KIT | 1 |
| 1.23 | 4215716 | > SCREW M5X16 DIN912 8.8 A2A (4pieces) VP. | 1 |
| 1.24 | 2057978 | > RONDELLE A5,3 DIN6797 FST ZN (4 PIECES) | 1 |

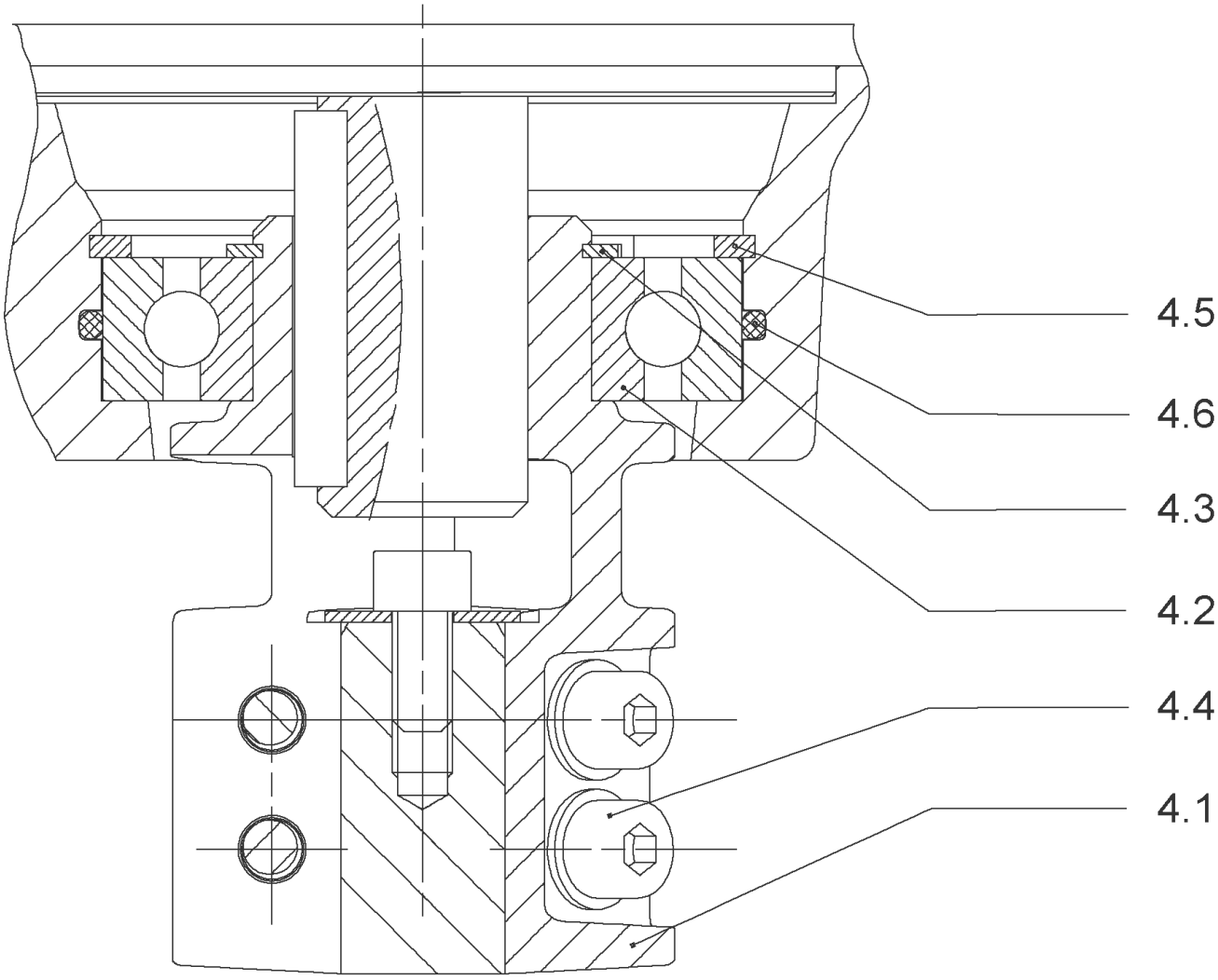
4.5
4.6
4.3
4.2
4.4
4.1

## COUPLING D.16XD.28 FT130 HELIX KIT (4159710)

| Item | Article no. | Description | Quantity |
|---|---|---|---|
| 4.1 | | COUPLING M+ Ø16XØ28 FT130 MACHINED | 1 |
| 4.2 | 2131022 | BALL BEARING 6209/ZZ-C3(HT)VP. | 1 |
| 4.3 | 4233930 | CIRCLIP-FOR-BORES-D45x1,75 VP. | 1 |
| 4.4 | 4157726 | SCREW KIT M8X30 (4 PIECES) | 1 |
| 4.5 | 4234252 | CIRCLIPS 85X3 VP. | 1 |
| 4.6 | 4234243 | O-RING 85X3 VP. | 1 |
| | | NOMEL CONTACT WASHER 8x16x1,4 STEEL ZC | 1 |

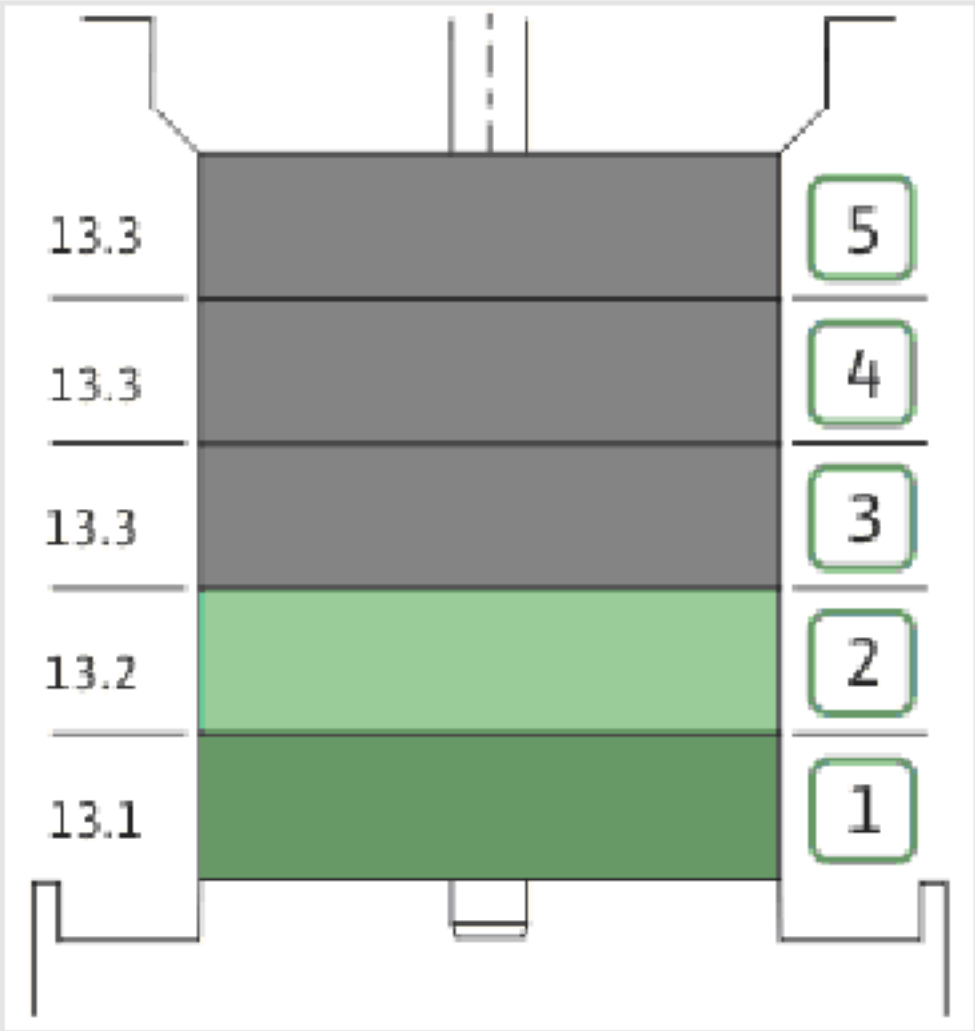
13.3
13.3
13.3
13.2
13.1
5
4
3
2
1

| Item | Article no. | Description | Quantity |
|---|---|---|---|
| 13.1 | 4171331 | STAGE HELIX10 1.4301KIT | 1 |
| | | > MACH.STG-CASING-WOGV-WNR-M+10-304 | 1 |
| | | > IMPELLER-M+10-304 | 1 |
| 13.2 | 4172792 | INTERMEDIATE STAGE HELIX 10 1.4301 KIT | 1 |
| | | > MACH.BEARING-STG-CASING-WNR-M+10-304 | 1 |
| | | > IMPELLER-M+10-304 | 1 |
| | | > SHAFT SLEEVE-SPACER-Ø19,35x18,465-304 | 1 |
| | | > SHAFT-SLEEVE-D16xD20x18-CW | 1 |
| 13.3 | 4172793 | INTERMEDIATE STAGE HELIX 10 1.4301 KIT | 1 |
| | | > MACH.STD-STG-CASING-WGV+NR-M+10-304 | 1 |
| | | > IMPELLER-M+10-304 | 1 |
| | | > IMPELLER SPACER Ø16,05X19,45-L36,465-304 | 1 |

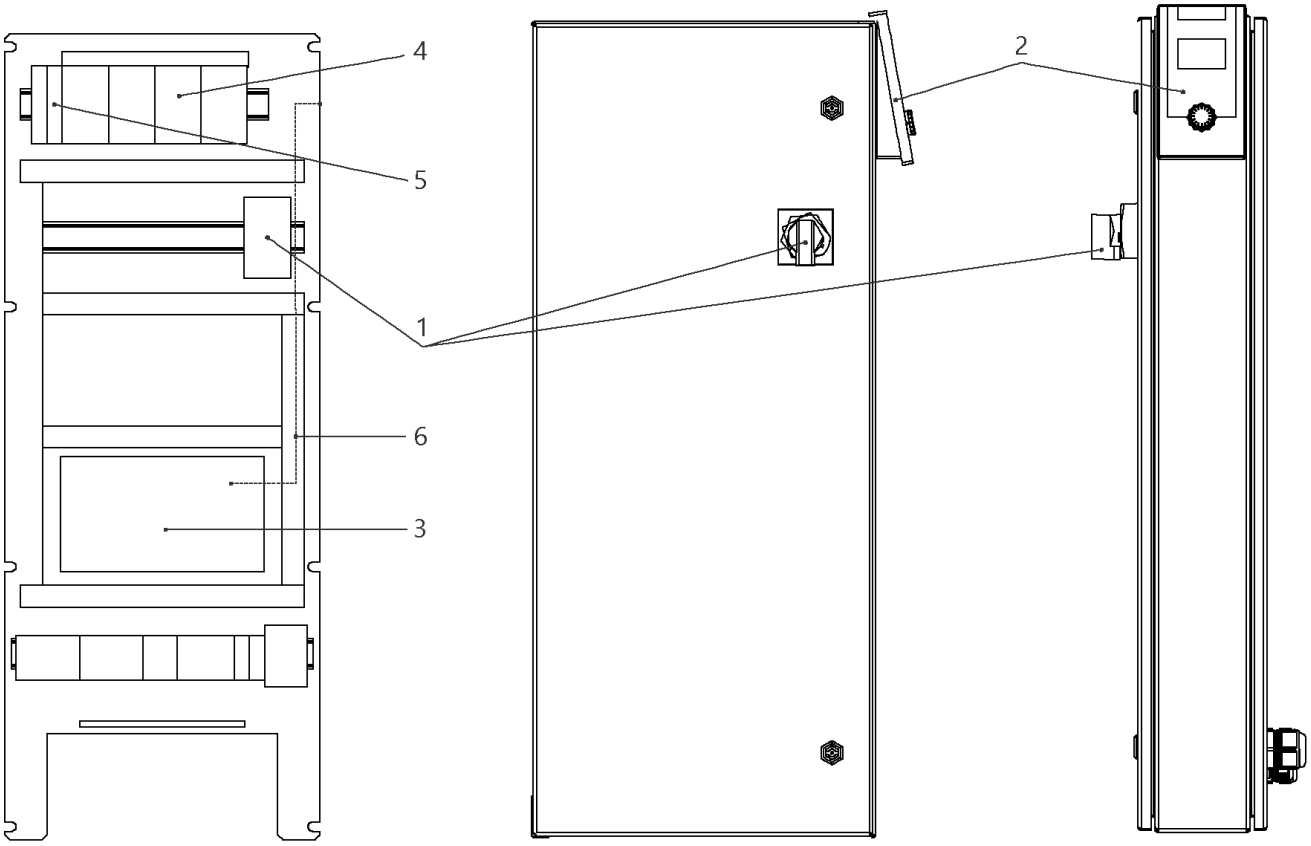
4
5
1
6
3
2

## W-CTRL-SCE-B-2x4,0KW-T4-FM-ND2

| Item | Article no. | Description | Quantity |
|---|---|---|---|
| 1 | 2104470 | MAIN SWITCH OT40F3 L250 KIT | 1 |
| 2 | 4184784 | CONTROL PANEL HMI SC KIT | 1 |
| 2 | 4185259 | ASSEMBLY DISPLAY SC PKG VP. | 1 |
| 3 | 4185257 | ASSEMBLY CPU SCe Booster VP. | 1 |
| 4 | 2051217 | AUTOM.CIRCUIT BREAKER S203 B16 TO7,5kW | 1 |
| 5 | 2046288 | CIRCUIT BREAKER S201 B16 | 1 |
| 6 | 4194956 | PATCH CABLE RJ45 CAT6 1,0M BLUE SC-PANEL | 1 |

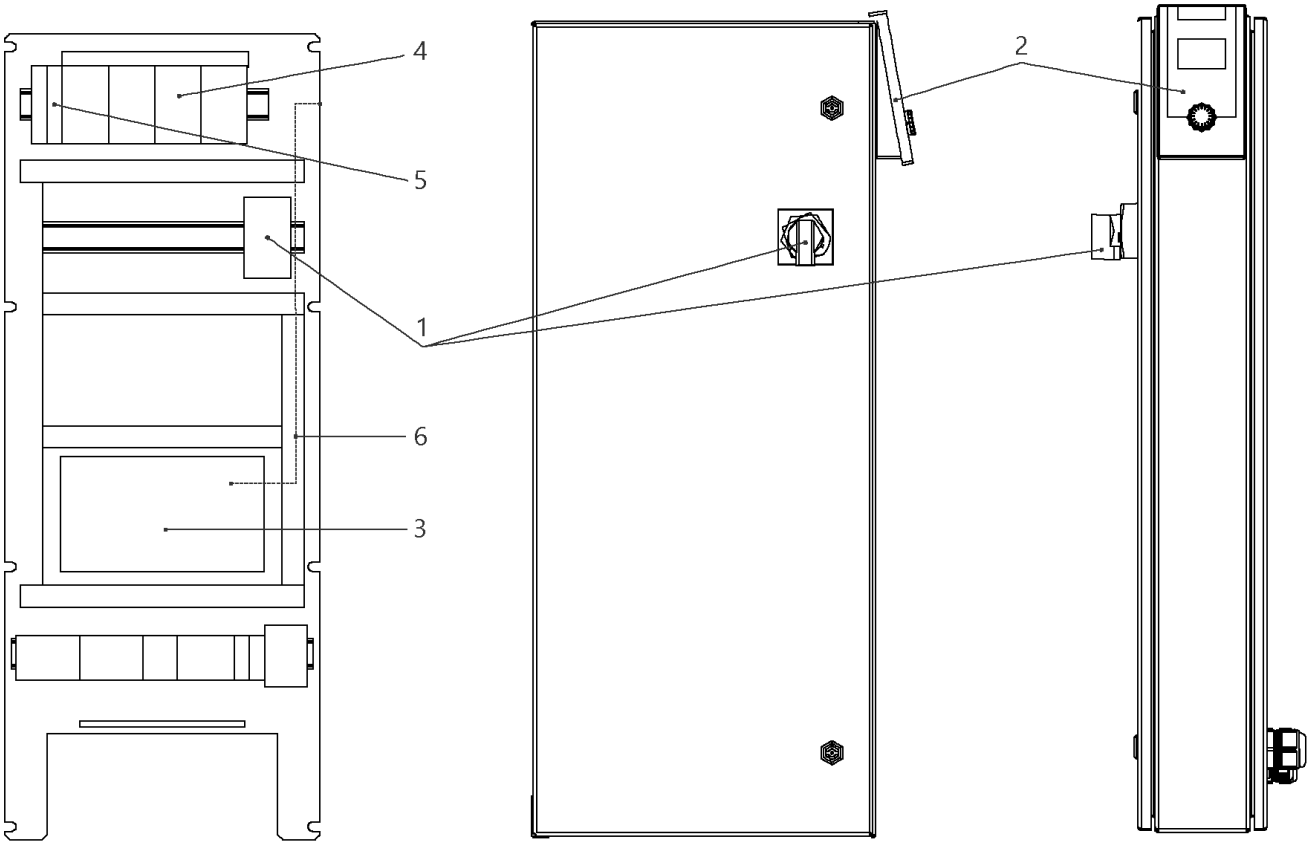
4
5
1
6
3
2

## W-CTRL-SCE-B-2x13A-T34-FM-ND2-AVC-PKG (2541905)

| Item | Article no. | Description | Quantity |
|---|---|---|---|
| 1 | 2104473 | MAIN SWITCH OT63F3 L105 KIT | 1 |
| Note: TO / BIS / JUSQU'AU 30/06/2015 | | | |
| 1 | 2104470 | MAIN SWITCH OT40F3 L250 KIT | 1 |
| Note: FROM / AB / À PARTIR DU 01/07/2015 | | | |
| 2 | 4184784 | CONTROL PANEL HMI SC KIT | 1 |
| 2 | 4185259 | ASSEMBLY DISPLAY SC PKG VP. | 1 |
| Note: DISPLAY ALONE / PLATINE SEULE | | | |
| 3 | 4185257 | ASSEMBLY CPU SCe Booster VP. | 1 |
| 4 | 2051217 | AUTOM.CIRCUIT BREAKER S203 B16 TO7,5kW | 1 |
| 5 | 2046288 | CIRCUIT BREAKER S201 B16 | 1 |
| 6 | 4194956 | PATCH CABLE RJ45 CAT6 1,0M BLUE SC-PANEL | 1 |

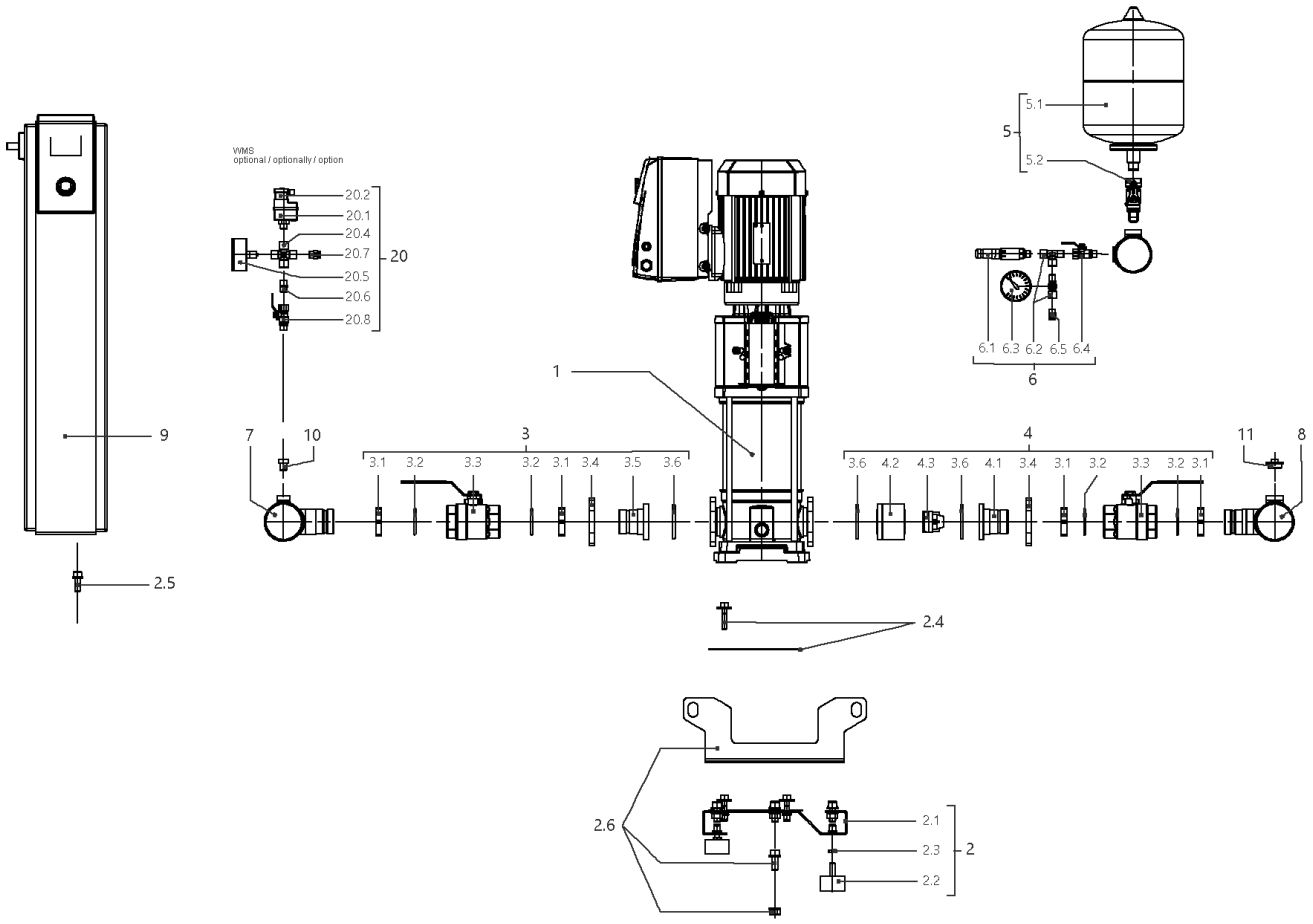
VVMS
optional / optionally / option
20.2
20.1
20.4
20.7
20.5
20.6
20.8
20
5.1
5
5.2
6.1 6.3 6.2 6.5 6.4
6
1
9
7
10
3
3.1 3.2 3.3 3.2 3.1 3.4 3.5 3.6
4
3.6 4.2 4.3 3.6 4.1 3.4 3.1 3.2 3.3 3.2 3.1
11
8
2.5
2.4
2.6
2.1
2.3
2.2
2

## SiBoost Smart 2HELIX VE1006 (2536347)

| Item | Article no. | Description | Quantity |
|---|---|---|---|
| 1 | | HELIX VE1006-1/16/E/S | 1 |
| Note: TO / BIS / JUSQU'AU 30/04/2016 | | | |
| 1 | 4201555 | HELIX VE1006-1/16/E/S | 1 |
| Note: FROM / AB / À PARTIR DU 01/05/2016 | | | |
| 2 | 4197125 | BASE PLATE DE2 850x420 KIT | 1 |
| 2.1 | | > BASEPLATE_2x4/6/10/16V_E300_BOX_150 | 1 |
| 2.2 | 2028654 | > VIBRATION DAMPER D.50X30 M10X28 | 1 |
| 2.3 | 2028281 | > NUT M10 DIN936 (ISO4035) 17H VZ | 1 |
| 2.4 | 4197083 | > HOLDER PUMP Helix 10/16 KIT | 1 |
| 2.5 | 4197084 | > HOLDER SWITCHBOX WILO Smart Control KIT | 1 |
| 2.6 | 4197117 | > LIFTING Siboost HELIX SC KIT | 1 |
| 3 | 4197072 | SUCTION SIDE Siboost Helix10/16 KIT | 1 |
| 3.1 | 2032623 | > NUT G1 1/2"SW55 MS | 1 |
| 3.2 | 2032616 | > O-RING ID.44X3,53N DIN3771 E7502 | 1 |
| 3.2 | 2534877 | > BALL TAP KDW40-H G11/2I-I-DN40 DVGW | 1 |
| 3.4 | 2032626 | > OVAL FLANGE D52-LK100 ST-VZ | 1 |
| 3.5 | 2032627 | > UNION INSERT DN40 LAPPED FLANGE | 1 |
| 3.6 | 2032628 | > O-RING ID.56,52X5,33N DIN3771 E7502 | 1 |
| 4 | 4197074 | DELIVERY SIDE Siboost Helix V10 KIT | 1 |
| 3.1 | 2032623 | > NUT G1 1/2"SW55 MS | 1 |
| 3.2 | 2032616 | > O-RING ID.44X3,53N DIN3771 E7502 | 1 |
| 3.3 | 2534877 | > BALL TAP KDW40-H G11/2I-I-DN40 DVGW | 1 |
| 3.4 | 2032626 | > OVAL FLANGE D52-LK100 ST-VZ | 1 |
| 4.1 | 2054316 | > UNION INSERT DN40 LAPPED FLANGE(W.SLOT) | 1 |
| 4.2 | 2054317 | > HOUSING F.NON RETURN VALVE(RV-IN) DN40 | 1 |
| 4.3 | 2032631 | > NON-RETURN-DEVICE DN40 (MTR)TYP RV-IN | 1 |
| 3.6 | 2032628 | > O-RING ID.56,52X5,33N DIN3771 E7502 | 1 |
| 5 | 2032642 | DIAPHREM TANK 8L/PN16 DIN4807/T5 KIT | 1 |
| 5.1 | 2045914 | > DIAPHREM TANK 8L TYP-DD 16BAR | 1 |
| 5.2 | 2027853 | > FLOW FITTING G3/4 FOR DIAPHRAGM VES. | 1 |
| 6 | 4197076 | PRESSURE SENSOR/ GAUGE 0-16BAR KIT | 1 |
| 6.1 | 2085909 | > PRESS.SENSOR 1/4" 0-16BAR 4-20MA VP. | 1 |
| 6.2 | 4197077 | > T-PIECE 1/4" VP. | 1 |
| 6.3 | 2028692 | > PRESSURE GAUGE NG63-PN16-G1/4 | 1 |

| Item | Article no. | Description | Quantity |
|---|---|---|---|
| 6.4 | 2028291 | > BALL TAP R1/4" PN42 GIACOMINI R254DL | 1 |
| 6.5 | 2028691 | > BLOWGUN 1/4" MS 30BAR VP. | 1 |
| 7 | 4197123 | PIPE DE2 R21/2''-2x11/2"+1x1/4x600 VP. | 1 |
| 8 | 4197124 | PIPE DE2 R21/2''-2x11/2"+1x1/4+1x3/4x600 | 1 |
| 9 | | W-CTRL-SCE-B-2x4,0KW-T4-FM-ND2 | 1 |
| Note: TO / BIS / JUSQU'AU 18/05/2014 | | | |
| 9 | 2541905 | W-CTRL-SCE-B-2x13A-T34-FM-ND2-AVC-PKG | 1 |
| Note: FROM / AB / À PARTIR DU 19/05/2014 | | | |
| 10 | 4197079 | PLUG G1/4"x10 AISI304 KIT | 1 |
| 11 | 2032654 | PLUG R3/4" MS VIEGA 1751 | 1 |
| 20 | 2521150 | ASSEMBLY WMS. DE-EB. +VP | 1 |
| 20.1 | 2028652 | > PRESSURE SWITCH PS3-ASR 1/(1,3) VP. | 1 |
| 20.2 | 2130983 | > PLUG PS3-415 WITH KABEL 1,5M 2NO VP. | 1 |
| 20.4 | 2028290 | > CROSSPIECE R1/4" MS-NICKEL | 1 |
| 20.5 | 2028687 | > PRESSURE GAUGE NG63 R1/4" HI.0-6BAR | 1 |
| 20.6 | 2054268 | > DUAL NIPPLE G1/4" x G1/4" MS VP. | 1 |
| 20.7 | 2028691 | > BLOWGUN 1/4" MS 30BAR VP. | 1 |
| 20.8 | 2028291 | > BALL TAP R1/4" PN42 GIACOMINI R254DL | 1 |

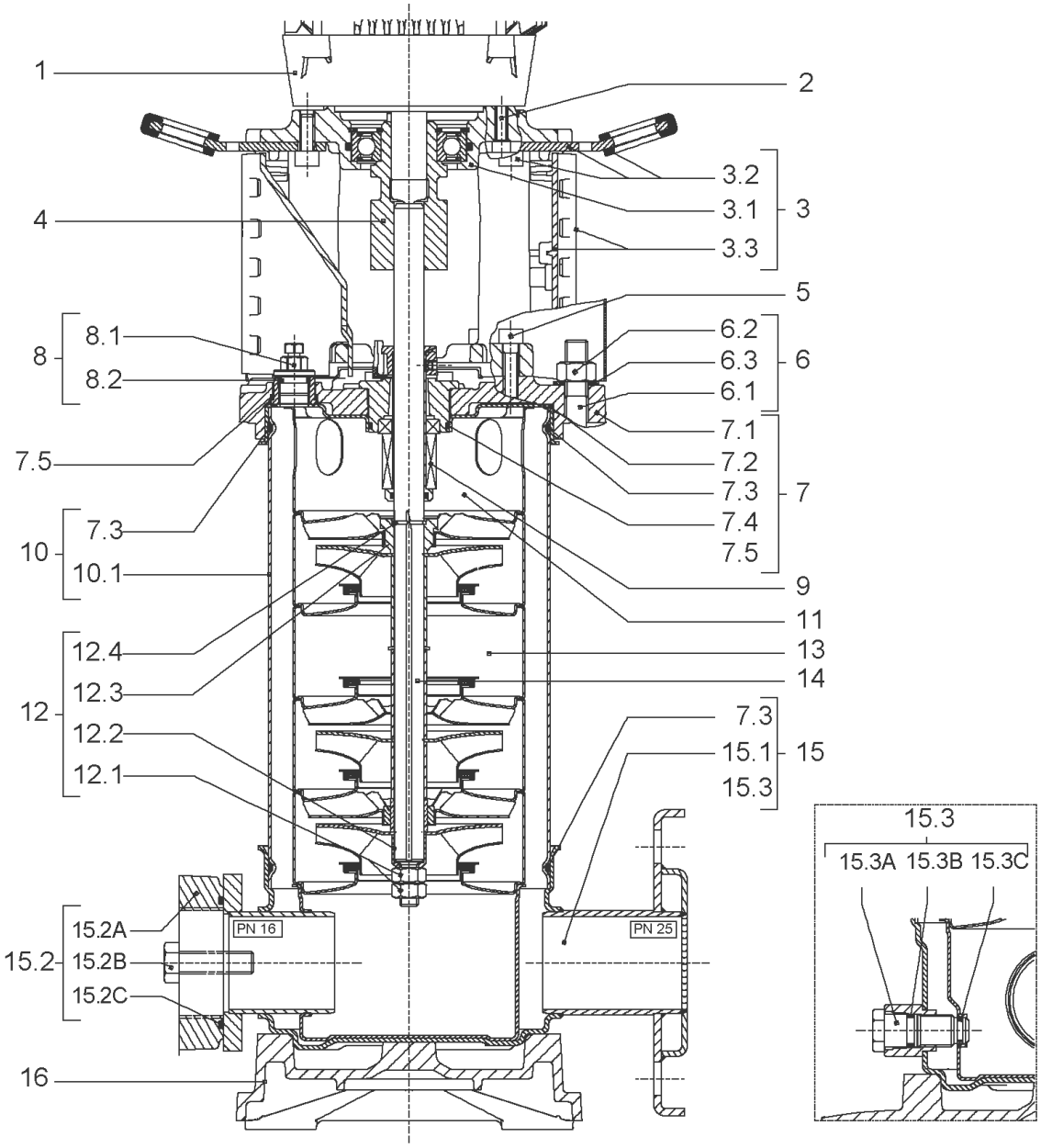
1
2
3.2
3.1
3
3.3
4
5
8.1
8
8.2
6.2
6.3
6
6.1
7.1
7.2
7.5
7.3
7
7.4
7.3
10
7.5
10.1
9
11
12.4
13
12.3
14
12
12.2
7.3
15.1
15
12.1
15.3
15.3
15.3A 15.3B 15.3C
15.2A
PN 16
PN 25
15.2
15.2B
15.2C
16

| Item | Article no. | Description | Quantity |
|---|---|---|---|
| 1 | | DRIVE HELIX-VE1006-IE2-ATB KIT | 1 |
| Note: MOTOR BRAND ATB | | | |
| 1 | | DRIVE HELIX-VE1006-IE2-WE KIT | 1 |
| Note: MOTOR BRAND WILO ELEC | | | |
| 1 | | DRIVE HELIX-VE1006-IE4-WE-KIT | 1 |
| Note: MOTOR BRAND WILO ELEC | | | |
| 2 | 4206025 | SCREW M8X45 (4 PIECES) | 1 |
| 3 | 4172789 | LANTERN FT130 HELIX V10 KIT | 1 |
| 3.1 | | > M+5_6_LANTERN_ONE-PIECE_FT130_CATA | 1 |
| 3.2 | 2127604 | > EYELET CPL.FT HELIX(2 PIECES) | 1 |
| 3.3 | 4159692 | > COUPLING PROTECTOR FT HELIX KIT | 1 |
| 4 | 4159710 | COUPLING D.16XD.28 FT130 HELIX KIT | 1 |
| 5 | 4159707 | SCREW M8X30 (4 PIECES) | 1 |
| 6 | 4177822 | STUD BOLT M12X413 KIT | 1 |
| 6.1 | | > TIE BOLT M12-413x18x30-1.4057 | 1 |
| 6.2 | 2094647 | > NUT M12 M12 ISO4032 VP. | 1 |
| 6.3 | 2123557 | > WASHER CS-12.4-24-1.6-NFE25 (4 PIECES) | 1 |
| 7 | 4210143 | STATIONARY RING HOLDER HELIX 6" EPDM | 1 |
| 7.2 | 2127607 | > STATIONARY RING HOLDER 6" HELIX 1.4301 V | 1 |
| 7.3 | 4176513 | > O-RING FOR PUMP JACKET VP. | 1 |
| 7.4 | 2127603 | > O-RING ID.37,6x2,4 EPDM VP. | 1 |
| 7.5 | 2127602 | > O-RING ID.21,35x2 EPDM VP. | 1 |
| 8 | 4159686 | FILING/PURGING PLUG HELIX EPDM KIT | 1 |
| 9 | 4171327 | SEAL-KIT-HELIX6-10-16 O/E KIT | 1 |
| 10 | 4177823 | HOUSING PIPES D.152X285 1.4301 KIT | 1 |
| 7.3 | 4176513 | > O-RING FOR PUMP JACKET VP. | 1 |
| 10.1 | | > HOUSING-PIPE Ø152-M+1006-304 | 1 |
| 11 | 4172791 | CENTERING STAGE-RETURN HELIX10 1.4301VP. | 1 |
| 12 | 4209273 | SHAFT EQUIPMENT HELIX V10 KIT | 1 |
| 12.1 | | > NUT-H-M10-A4.70 | 1 |
| 12.2 | | > SERRATED LOCK WASHER M+10M3-316L | 1 |
| 12.3 | | > IMPELLER STOP RING L33,6-304 | 1 |
| 12.4 | | > STOP-RUSH-1/2-D16xd2-M+316 | 1 |
| 13 | | HYDRAULIC HELIX V 1006 1.4307 | 1 |

| Item | Article no. | Description | Quantity |
|---|---|---|---|
| 14 | 4177825 | SHAFT D.16X405 1.4301 VP. | 1 |
| 15 | 4159682 | PUMP HOUSING HELIX DN50 PN16 1.4301 KIT | 1 |
| 7.3 | 4176513 | > O-RING FOR PUMP JACKET VP. | 1 |
| 15.1 | | > BLASTING PPE HOUSING V-PN16-DN50-304 | 1 |
| 15.2 | 4217893 | > COUNTER FLANGE-G1"1/2-PN16-GJL KIT | 1 |
| 15.3 | 4171321 | > PRIMING/DRAIN PLUG EPDM HELIX KIT | 1 |
| 16 | 4176517 | BASEPLATE V8/10 VP. | 1 |

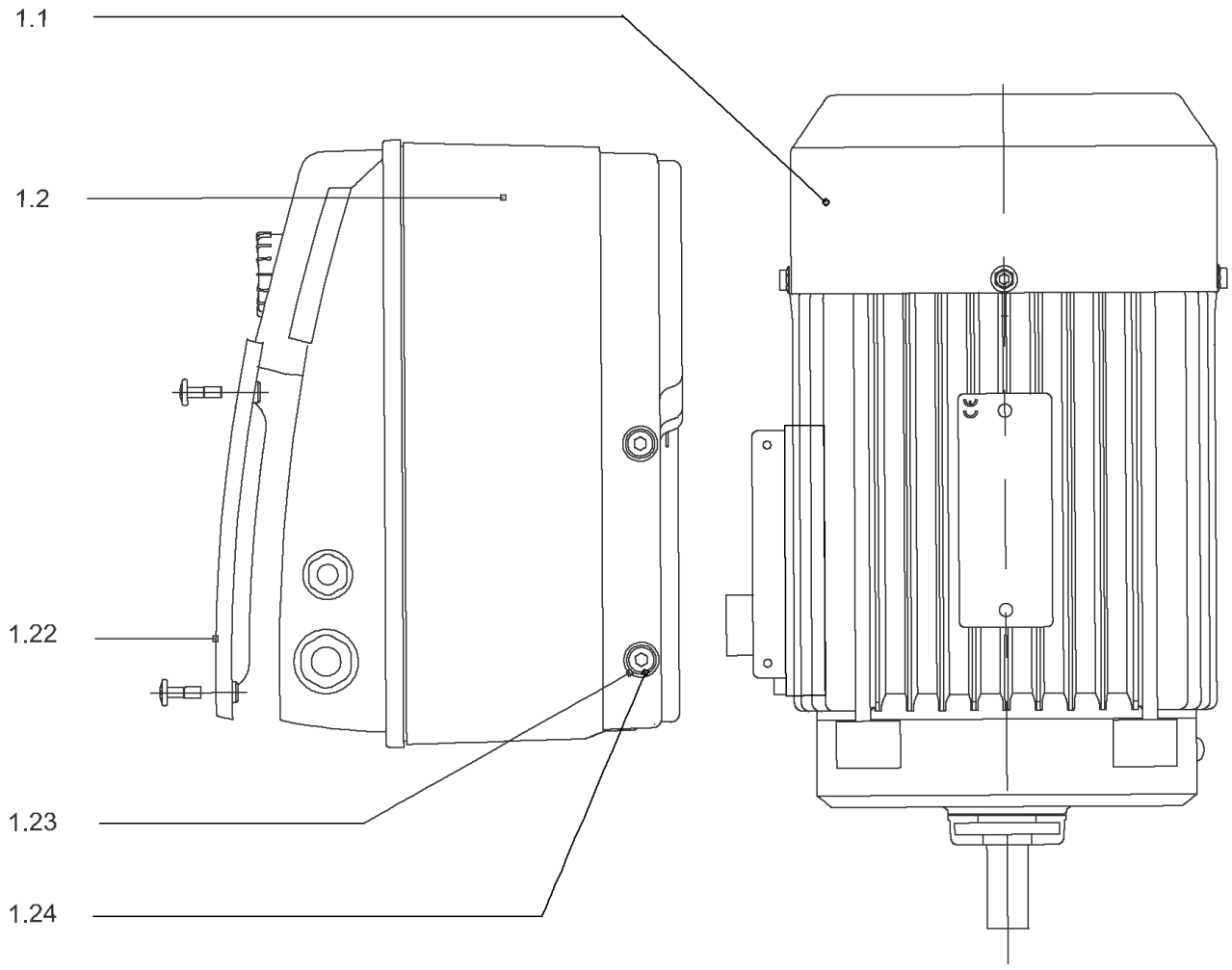
1.1
1.2
1.22
1.23
1.24

## DRIVE HELIX-VE1006-IE2-ATB KIT

| Item | Article no. | Description | Quantity |
|---|---|---|---|
| 1.1 | | MOTOR 4/2/112 3~ 380V 60HZ IE2 ATB VP. | 1 |
| Note: no longer available/nicht mehrlieferbar/n'est plus disponible | | | |
| | | SPARE PARTS MOTOR:ON REQUEST | 1 |
| 1.2 | 4184684 | MODULE HELIX-VE1006-IE2-ATB SET | 1 |
| 1.22 | 2054227 | > MODULE COVER/GASKET TL3/4 KIT | 1 |
| 1.23 | 4215716 | > SCREW M5X16 DIN912 8.8 A2A (4pieces) VP. | 1 |
| 1.24 | 2057978 | > RONDELLE A5,3 DIN6797 FST ZN (4 PIECES) | 1 |

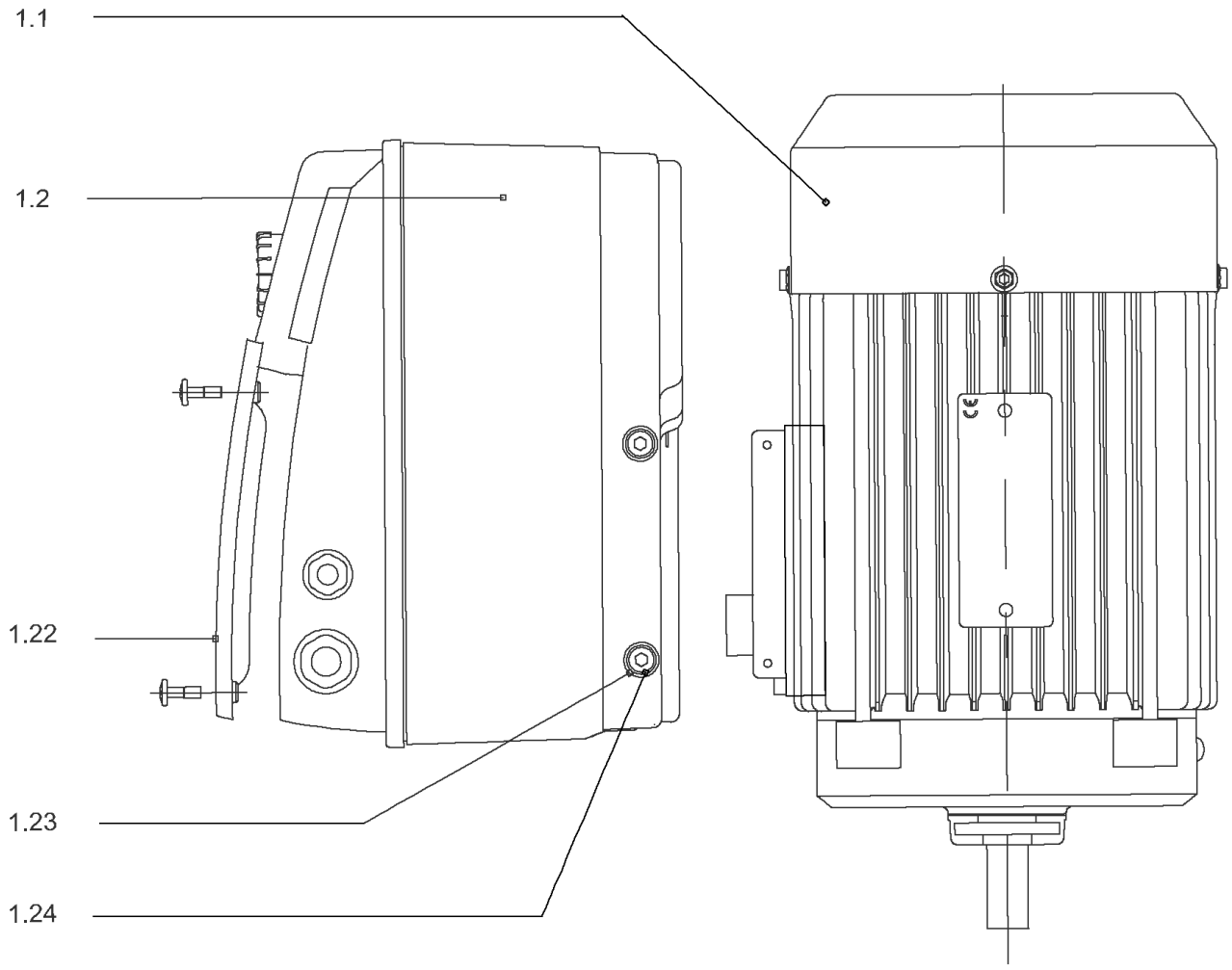
1.1
1.2
1.22
1.23
1.24

## DRIVE HELIX-VE1006-IE2-WE KIT

| Item | Article no. | Description | Quantity |
|---|---|---|---|
| 1.1 | 4188824 | MO.4/2/112 3~380V 60Hz IE2 WE VP. | 1 |
| | | SPARE PARTS MOTOR:ON REQUEST | 1 |
| 1.2 | 4186397 | MODULE HELIX-VE1006-IE2-WE SET | 1 |
| 1.22 | 2054227 | > MODULE COVER/GASKET TL3/4 KIT | 1 |
| 1.23 | 4215716 | > SCREW M5X16 DIN912 8.8 A2A (4pieces) VP. | 1 |
| 1.24 | 2057978 | > RONDELLE A5,3 DIN6797 FST ZN (4 PIECES) | 1 |

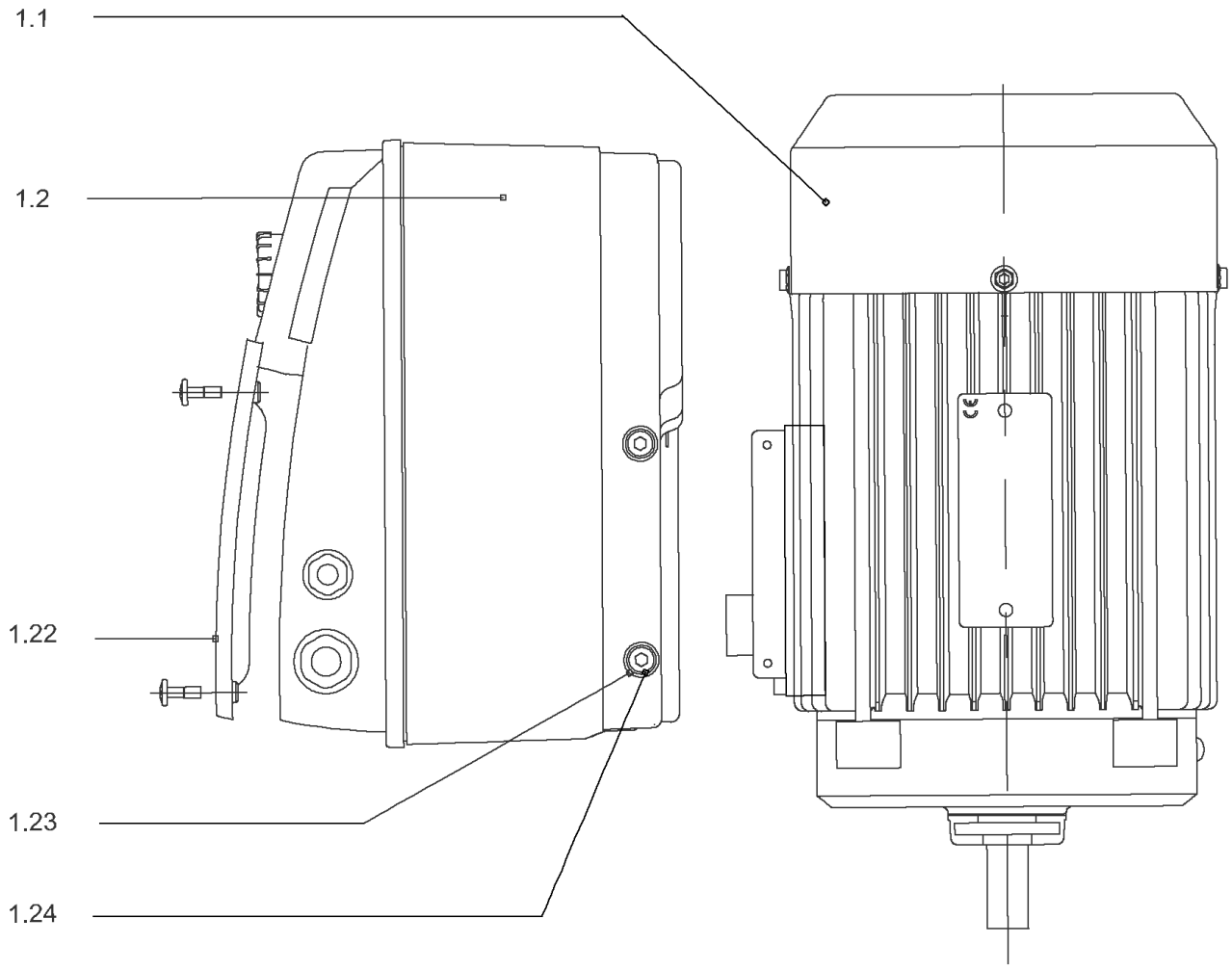
1.1
1.2
1.22
1.23
1.24

## DRIVE HELIX-VE1006-IE4-WE-KIT

| Item | Article no. | Description | Quantity |
|---|---|---|---|
| 1.1 | 4207924 | MOTOR 4/2/112 3~ 380V 60HZ IE4 WE VP. | 1 |
| | | SPARE PARTS MOTOR:ON REQUEST | 1 |
| 1.2 | 4209606 | MODULE HELIX-VE1006-IE4-WE KIT | 1 |
| 1.22 | 2054227 | > MODULE COVER/GASKET TL3/4 KIT | 1 |
| 1.23 | 4215716 | > SCREW M5X16 DIN912 8.8 A2A (4pieces) VP. | 1 |
| 1.24 | 2057978 | > RONDELLE A5,3 DIN6797 FST ZN (4 PIECES) | 1 |

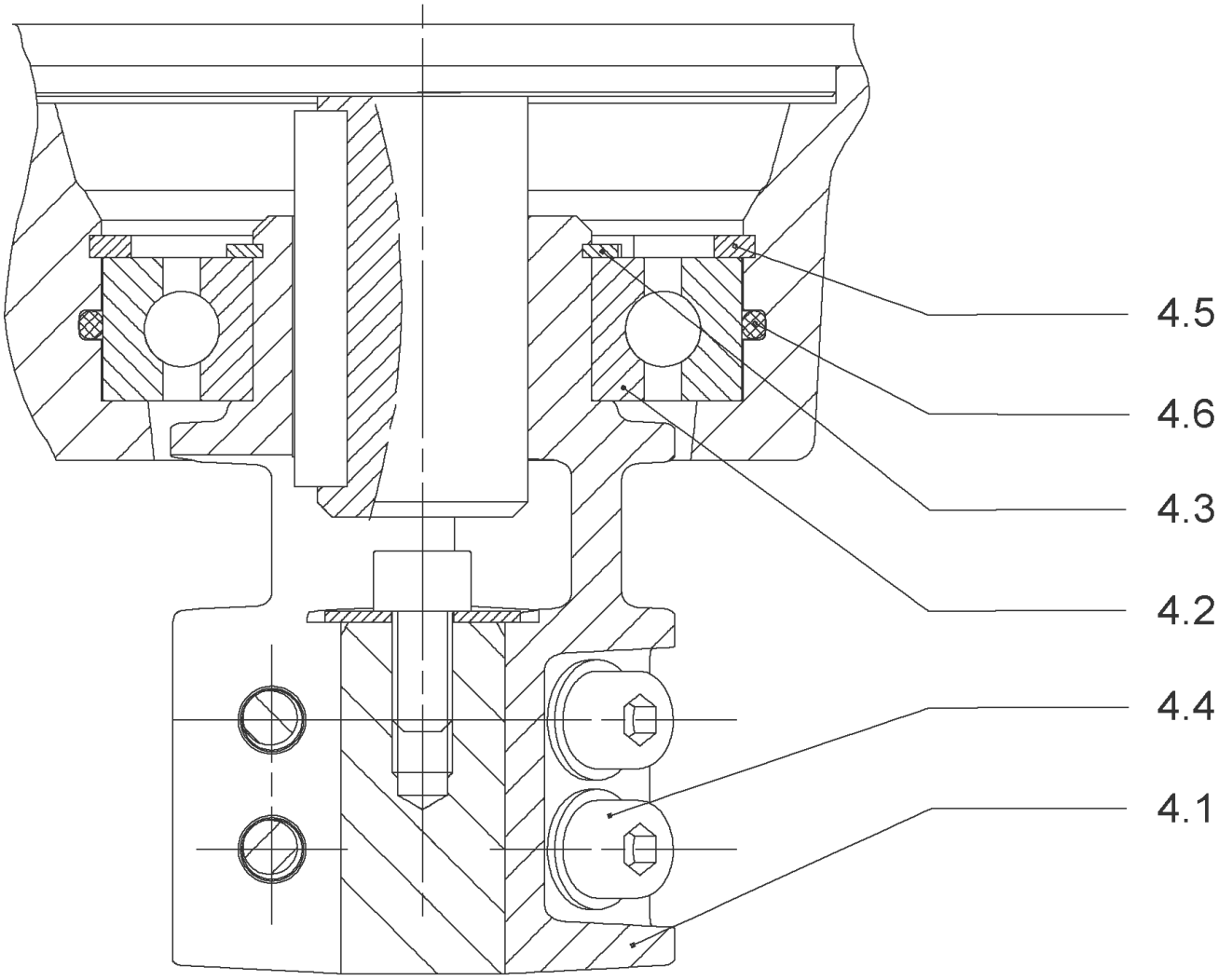
4.5
4.6
4.3
4.2
4.4
4.1

## COUPLING D.16XD.28 FT130 HELIX KIT (4159710)

| Item | Article no. | Description | Quantity |
|---|---|---|---|
| 4.1 | | COUPLING M+ Ø16XØ28 FT130 MACHINED | 1 |
| 4.2 | 2131022 | BALL BEARING 6209/ZZ-C3(HT)VP. | 1 |
| 4.3 | 4233930 | CIRCLIP-FOR-BORES-D45x1,75 VP. | 1 |
| 4.4 | 4157726 | SCREW KIT M8X30 (4 PIECES) | 1 |
| 4.5 | 4234252 | CIRCLIPS 85X3 VP. | 1 |
| 4.6 | 4234243 | O-RING 85X3 VP. | 1 |
| | | NOMEL CONTACT WASHER 8x16x1,4 STEEL ZC | 1 |

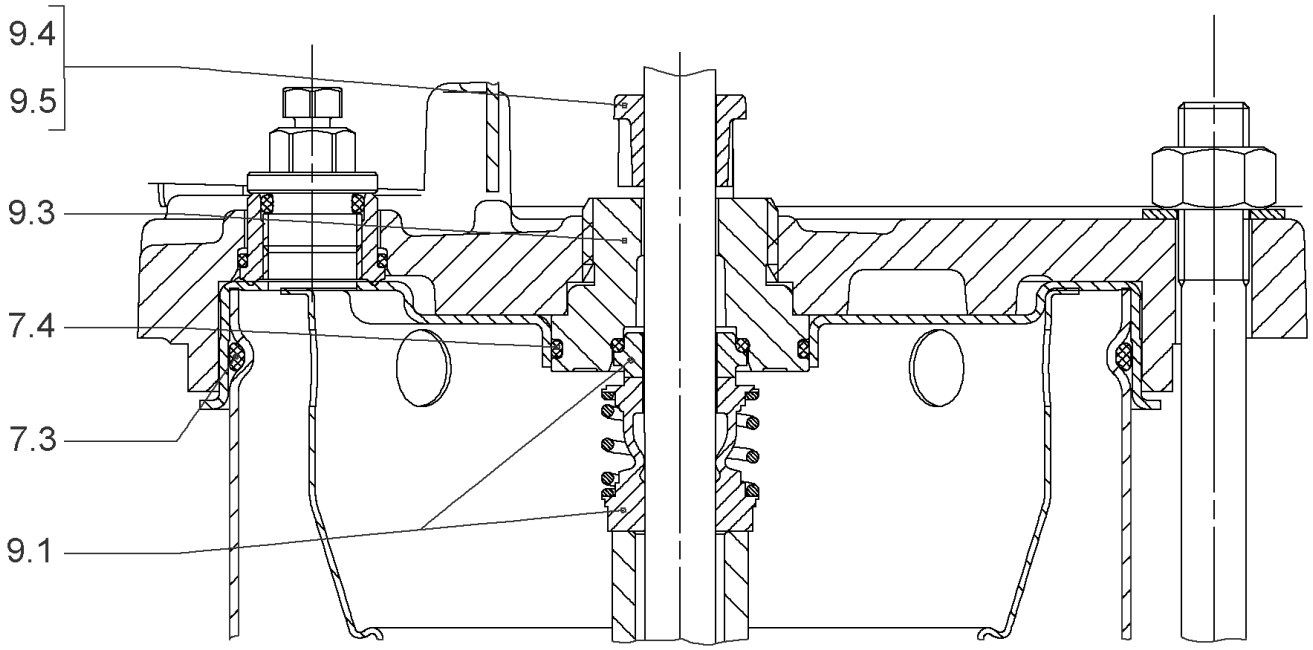
9.4
9.5
9.3
7.4
7.3
9.1

## SEAL-KIT-HELIX6-10-16 O/E KIT (4171327)

| Item | Article no. | Description | Quantity |
|---|---|---|---|
| 7.3 | 4176513 | O-RING FOR PUMP JACKET VP. | 1 |
| 7.4 | 2127603 | O-RING ID.37,6x2,4 EPDM VP. | 1 |
| 9.1 | 4177801 | MECH.SEAL HELIX6-10-16 O/E VP. | 1 |
| 9.3 | 4177798 | MACHINED RING HOLDER M+6" Ø16 304 VP. | 1 |
| 9.5 | 4177799 | MACHINED DRIVE RING Ø16 VP. | 1 |
| 9.4 | 4176520 | SCREW CH M5x5 A4-70 ( 3PIECES ) | 1 |

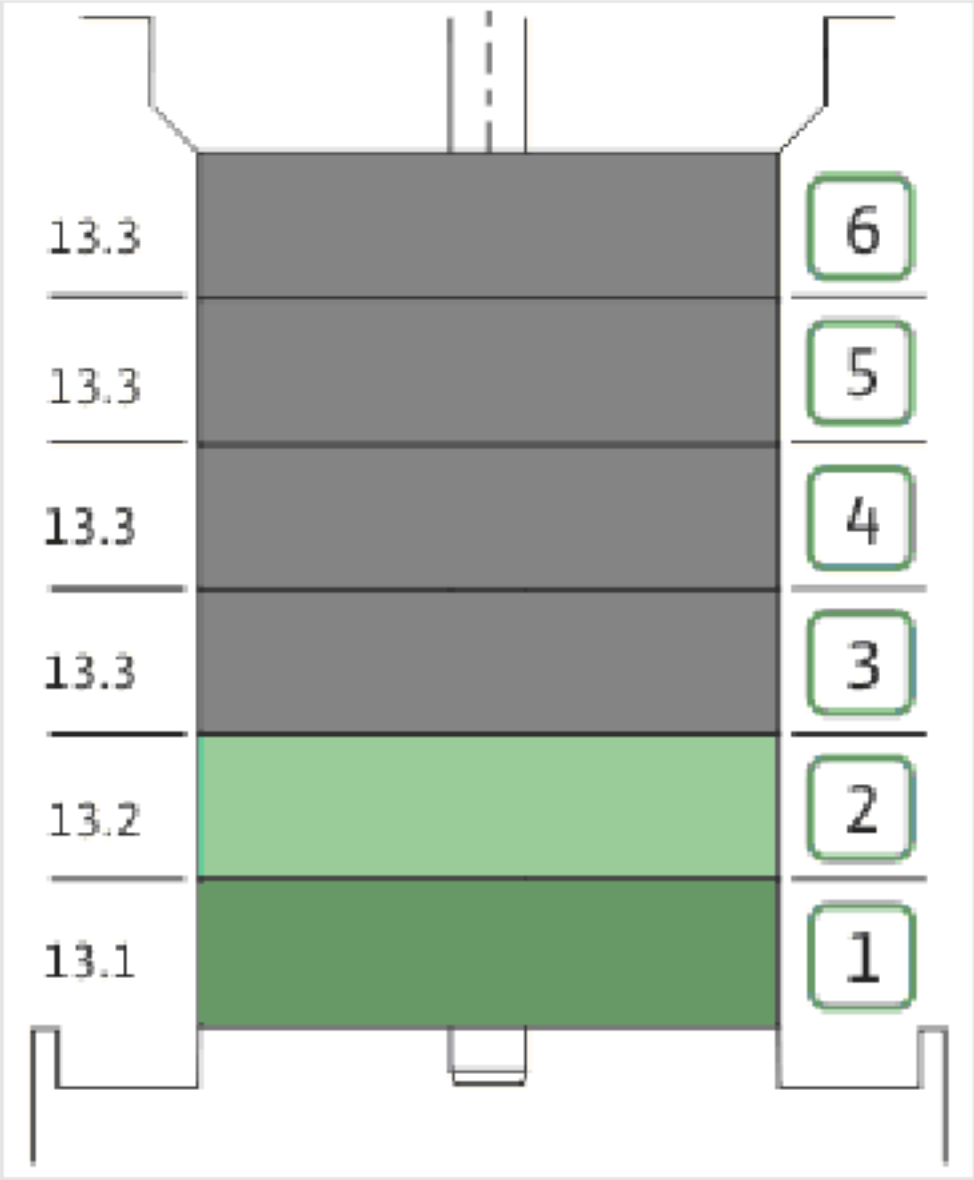
13.3
13.3
13.3
13.3
13.2
13.1
6
5
4
3
2
1

| Item | Article no. | Description | Quantity |
|---|---|---|---|
| 13.1 | 4171331 | STAGE HELIX10 1.4301KIT | 1 |
| | | > MACH.STG-CASING-WOGV-WNR-M+10-304 | 1 |
| | | > IMPELLER-M+10-304 | 1 |
| 13.2 | 4172792 | INTERMEDIATE STAGE HELIX 10 1.4301 KIT | 1 |
| | | > MACH.BEARING-STG-CASING-WNR-M+10-304 | 1 |
| | | > IMPELLER-M+10-304 | 1 |
| | | > SHAFT SLEEVE-SPACER-Ø19,35x18,465-304 | 1 |
| | | > SHAFT-SLEEVE-D16xD20x18-CW | 1 |
| 13.3 | 4172793 | INTERMEDIATE STAGE HELIX 10 1.4301 KIT | 1 |
| | | > MACH.STD-STG-CASING-WGV+NR-M+10-304 | 1 |
| | | > IMPELLER-M+10-304 | 1 |
| | | > IMPELLER SPACER Ø16,05X19,45-L36,465-304 | 1 |

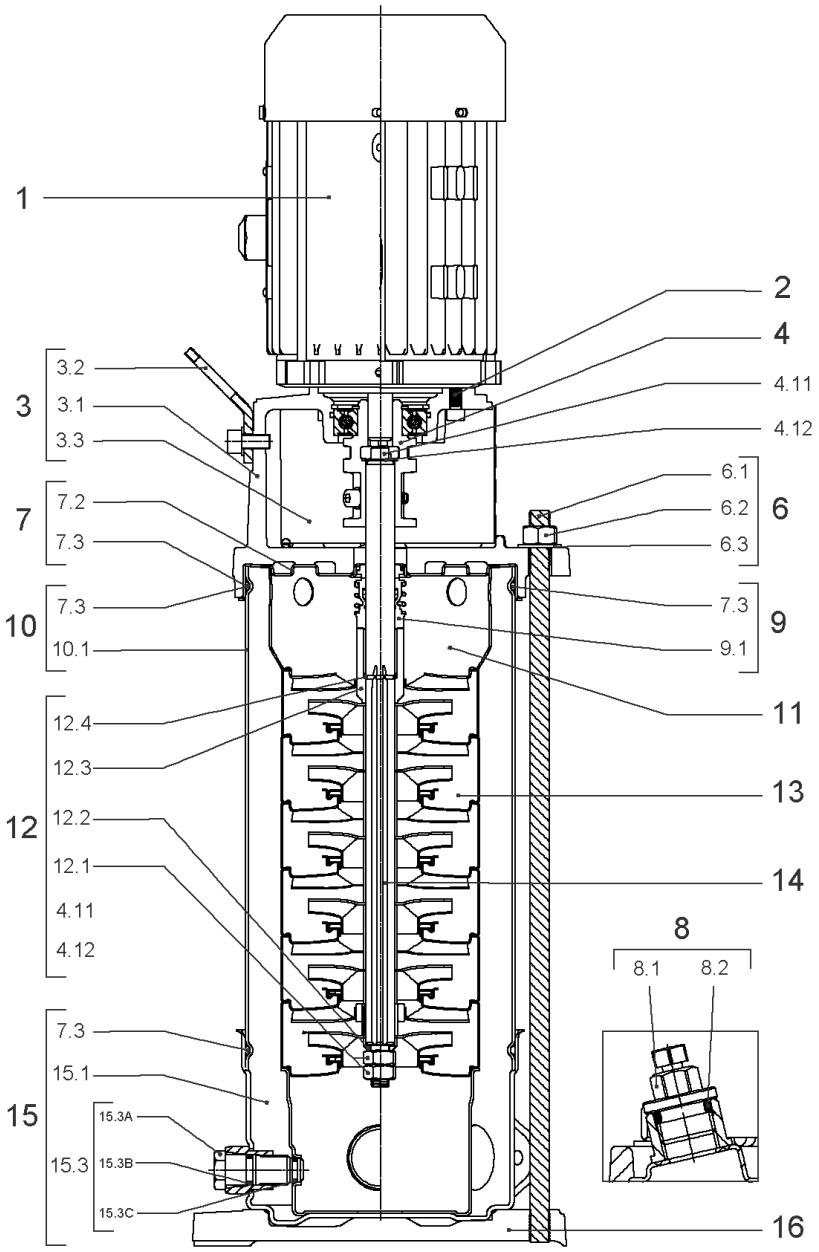
1
2
4
4.11
4.12
3
3.2
3.1
3.3
7
7.2
7.3
10
7.3
10.1
12
12.4
12.3
12.2
12.1
4.11
4.12
15
7.3
15.1
15.3
15.3A
15.3B
15.3C
6
6.1
6.2
6.3
9
7.3
9.1
11
13
14
8
8.1
8.2
16

## HELIX VE1006-1/16/E/S (4201555)

| Item | Article no. | Description | Quantity |
|---|---|---|---|
| 1 | | DRIVE HELIX-VE1006-IE4-WE-KIT | 1 |
| Note: MOTOR BRAND WILO ELEC | | | |
| | | SPARE PARTS MOTOR:ON REQUEST | 1 |
| 2 | 4159707 | SCREW M8X30 (4 PIECES) | 1 |
| 3 | 4214473 | LANTERN FT130 HELIX KIT | 1 |
| 3.1 | | > LANT-MOT-VMI-ReDTC6"-FT130-MACHINED+CATA | 1 |
| 3.2 | 4184852 | > EYELET CPL.FT HELIX (2 PIECES) | 1 |
| 3.3 | 4213782 | > COUPLING PROTECTOR FT115/130 HELIX KIT | 1 |
| 4 | 4159710 | COUPLING D.16XD.28 FT130 HELIX KIT | 1 |
| 6 | 4177822 | STUD BOLT M12X413 KIT | 1 |
| 6.1 | | > TIE BOLT M12-413x18x30-1.4057 | 1 |
| 6.2 | 2094647 | > NUT M12 M12 ISO4032 VP. | 1 |
| 6.3 | 2123557 | > WASHER CS-12.4-24-1.6-NFE25 (4 PIECES) | 1 |
| 7 | 4214481 | STATIONARY RING HOLDER HELIX D27 ReDTC | 1 |
| 7.2 | 4214479 | > STATIONARY RING HOLDER HELIX D27 VP. | 1 |
| 7.3 | 4176513 | > O-RING FOR PUMP JACKET VP. | 1 |
| 8 | 4212724 | FILING/PURGING PLUG HELIX ReDTC KIT | 1 |
| 8.1 | | > FILLING PLUG MVI6"-304 | 1 |
| 8.2 | 4177800 | > O-RING EPDM PLUG HELIX VP. | 1 |
| 9 | 4214483 | MECH.SEAL HELIX6-10-16 O/E ReDTC KIT | 1 |
| 9.1 | 4177801 | > MECH.SEAL HELIX6-10-16 O/E VP. | 1 |
| 7.3 | 4176513 | > O-RING FOR PUMP JACKET VP. | 1 |
| 10 | 4177823 | HOUSING PIPES D.152X285 1.4301 KIT | 1 |
| 7.3 | 4176513 | > O-RING FOR PUMP JACKET VP. | 1 |
| 10.1 | | > HOUSING-PIPE Ø152-M+1006-304 | 1 |
| 11 | 4172791 | CENTERING STAGE-RETURN HELIX10 1.4301VP. | 1 |
| 12 | 4214517 | SHAFT EQUIPMENT HELIX V10 ReDTC KIT | 1 |
| 12.1 | | > NUT-H-M10-A4.70 | 1 |
| 12.2 | | > SERRATED LOCK WASHER M+10M3-316L | 1 |
| 12.3 | | > 1/2-SNAP-RING-6/10M3-316L | 1 |
| 12.4 | | > STOP-RUSH-1/2-D16xd2-M+316 | 1 |
| 4.11 | | > SCREW CHC-M6X14-8.8-ISO4762-GEOMET500A | 1 |
| 4.12 | | > WASHER D.24 L6U ZINK | 1 |
| 13 | | HYDRAULIC HELIX V 1006 1.4307 | 1 |

| Item | Article no. | Description | Quantity |
|---|---|---|---|
| 14 | 4214500 | SHAFT D.16X353 HELIX 1.4057 VP. | 1 |
| 15 | 4159682 | PUMP HOUSING HELIX DN50 PN16 1.4301 KIT | 1 |
| 7.3 | 4176513 | > O-RING FOR PUMP JACKET VP. | 1 |
| 15.1 | | > BLASTING PPE HOUSING V-PN16-DN50-304 | 1 |
| 15.2 | 4217893 | > COUNTER FLANGE-G1"1/2-PN16-GJL KIT | 1 |
| 15.3 | 4171321 | > PRIMING/DRAIN PLUG EPDM HELIX KIT | 1 |
| 16 | 4176517 | BASEPLATE V8/10 VP. | 1 |

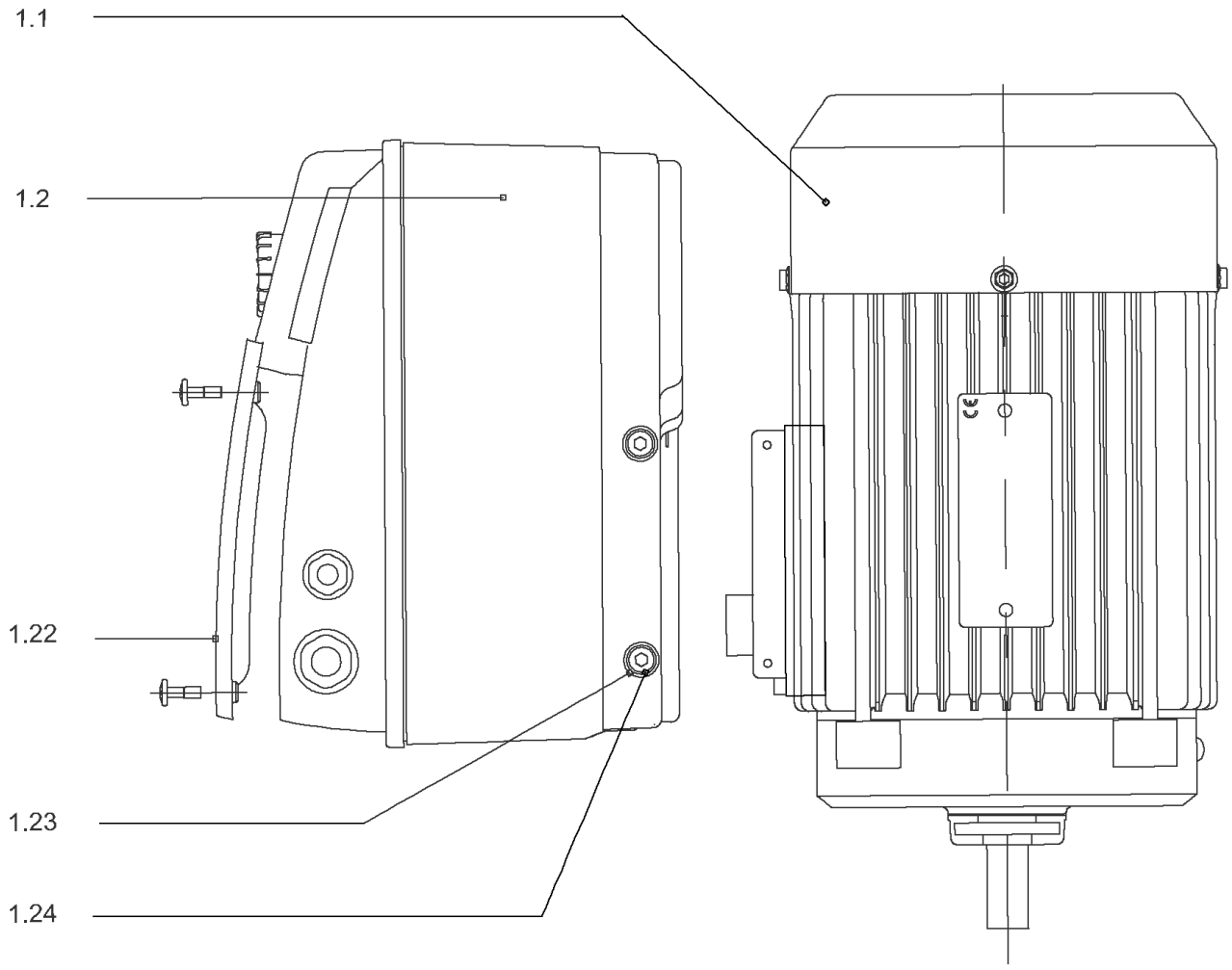
1.1
1.2
1.22
1.23
1.24

## DRIVE HELIX-VE1006-IE4-WE-KIT

| Item | Article no. | Description | Quantity |
|---|---|---|---|
| 1.1 | 4207924 | MOTOR 4/2/112 3~ 380V 60HZ IE4 WE VP. | 1 |
| | | SPARE PARTS MOTOR:ON REQUEST | 1 |
| 1.2 | 4209606 | MODULE HELIX-VE1006-IE4-WE KIT | 1 |
| 1.22 | 2054227 | > MODULE COVER/GASKET TL3/4 KIT | 1 |
| 1.23 | 4215716 | > SCREW M5X16 DIN912 8.8 A2A (4pieces) VP. | 1 |
| 1.24 | 2057978 | > RONDELLE A5,3 DIN6797 FST ZN (4 PIECES) | 1 |

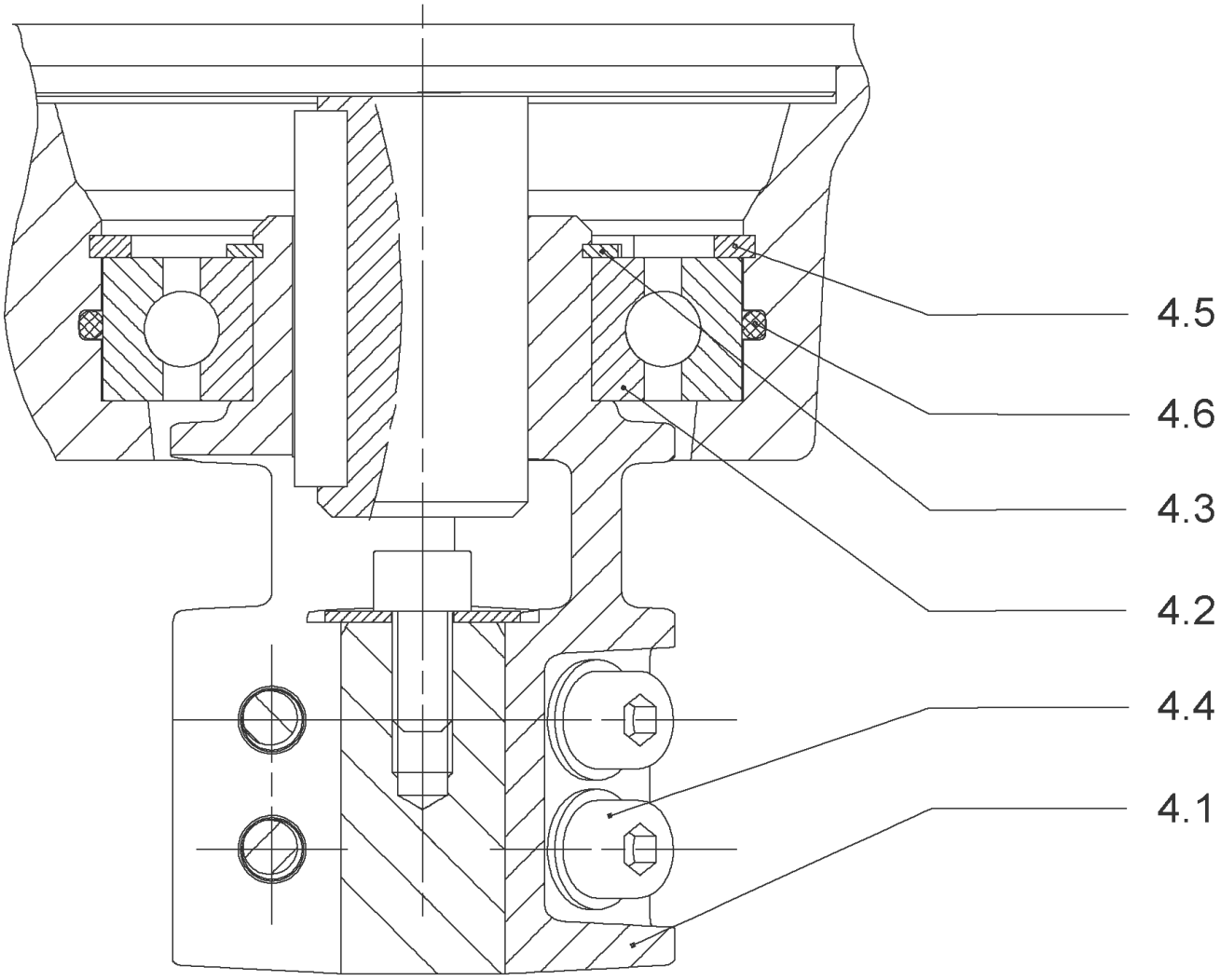
4.5
4.6
4.3
4.2
4.4
4.1

## COUPLING D.16XD.28 FT130 HELIX KIT (4159710)

| Item | Article no. | Description | Quantity |
|---|---|---|---|
| 4.1 | | COUPLING M+ Ø16XØ28 FT130 MACHINED | 1 |
| 4.2 | 2131022 | BALL BEARING 6209/ZZ-C3(HT)VP. | 1 |
| 4.3 | 4233930 | CIRCLIP-FOR-BORES-D45x1,75 VP. | 1 |
| 4.4 | 4157726 | SCREW KIT M8X30 (4 PIECES) | 1 |
| 4.5 | 4234252 | CIRCLIPS 85X3 VP. | 1 |
| 4.6 | 4234243 | O-RING 85X3 VP. | 1 |
| | | NOMEL CONTACT WASHER 8x16x1,4 STEEL ZC | 1 |

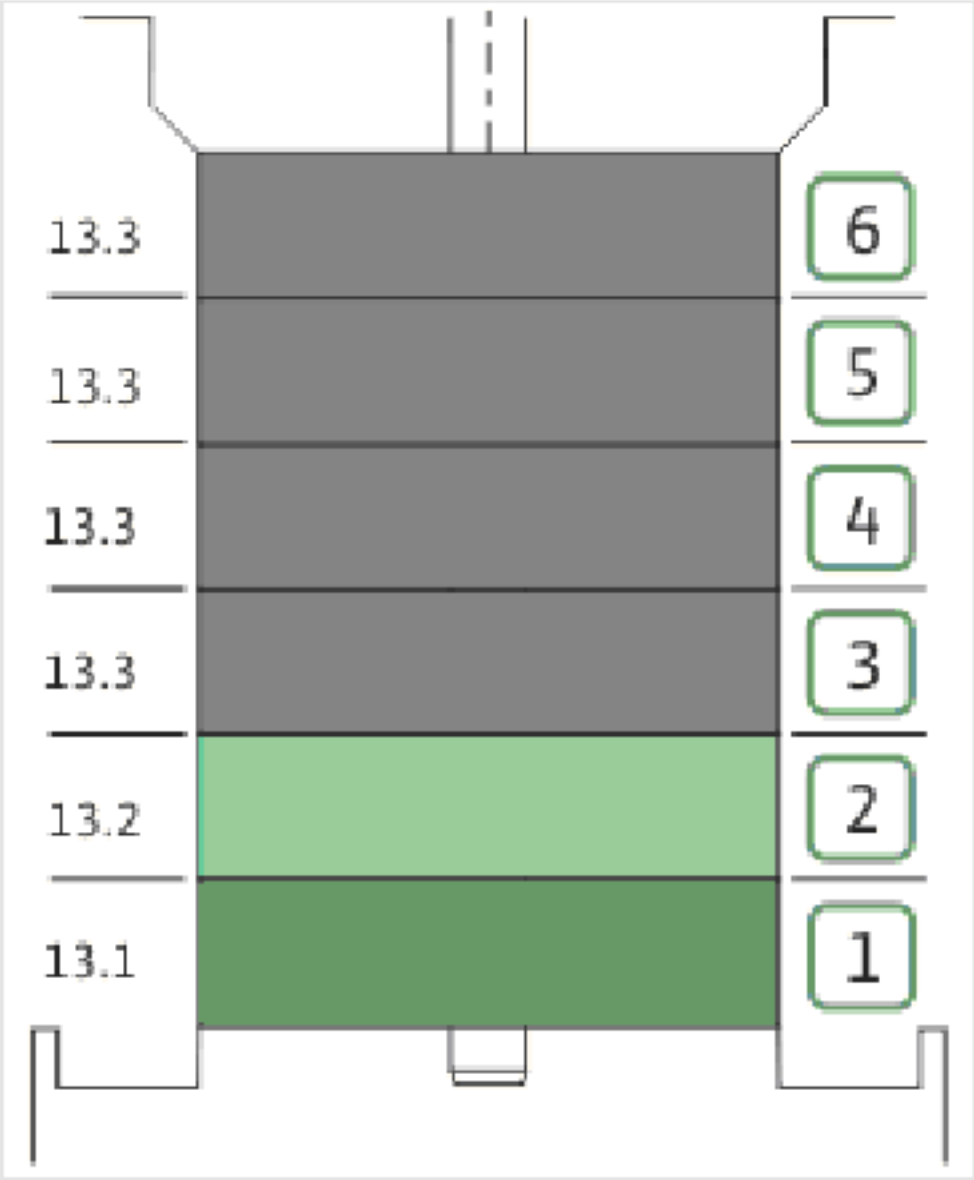
13.3
13.3
13.3
13.3
13.2
13.1
6
5
4
3
2
1

| Item | Article no. | Description | Quantity |
|---|---|---|---|
| 13.1 | 4171331 | STAGE HELIX10 1.4301KIT | 1 |
| | | > MACH.STG-CASING-WOGV-WNR-M+10-304 | 1 |
| | | > IMPELLER-M+10-304 | 1 |
| 13.2 | 4172792 | INTERMEDIATE STAGE HELIX 10 1.4301 KIT | 1 |
| | | > MACH.BEARING-STG-CASING-WNR-M+10-304 | 1 |
| | | > IMPELLER-M+10-304 | 1 |
| | | > SHAFT SLEEVE-SPACER-Ø19,35x18,465-304 | 1 |
| | | > SHAFT-SLEEVE-D16xD20x18-CW | 1 |
| 13.3 | 4172793 | INTERMEDIATE STAGE HELIX 10 1.4301 KIT | 1 |
| | | > MACH.STD-STG-CASING-WGV+NR-M+10-304 | 1 |
| | | > IMPELLER-M+10-304 | 1 |
| | | > IMPELLER SPACER Ø16,05X19,45-L36,465-304 | 1 |

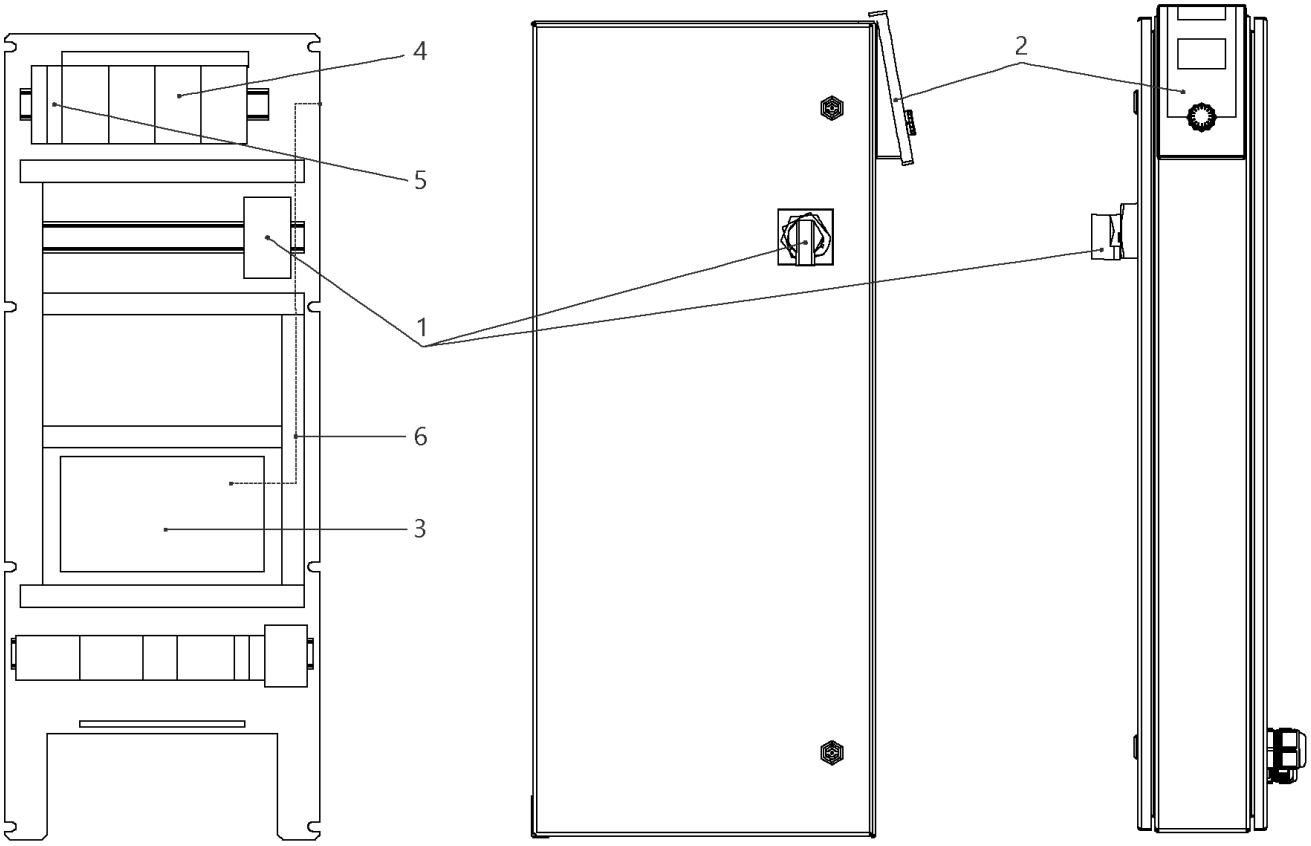
4
5
1
6
3
2

## W-CTRL-SCE-B-2x4,0KW-T4-FM-ND2

| Item | Article no. | Description | Quantity |
|---|---|---|---|
| 1 | 2104470 | MAIN SWITCH OT40F3 L250 KIT | 1 |
| 2 | 4184784 | CONTROL PANEL HMI SC KIT | 1 |
| 2 | 4185259 | ASSEMBLY DISPLAY SC PKG VP. | 1 |
| 3 | 4185257 | ASSEMBLY CPU SCe Booster VP. | 1 |
| 4 | 2051217 | AUTOM.CIRCUIT BREAKER S203 B16 TO7,5kW | 1 |
| 5 | 2046288 | CIRCUIT BREAKER S201 B16 | 1 |
| 6 | 4194956 | PATCH CABLE RJ45 CAT6 1,0M BLUE SC-PANEL | 1 |

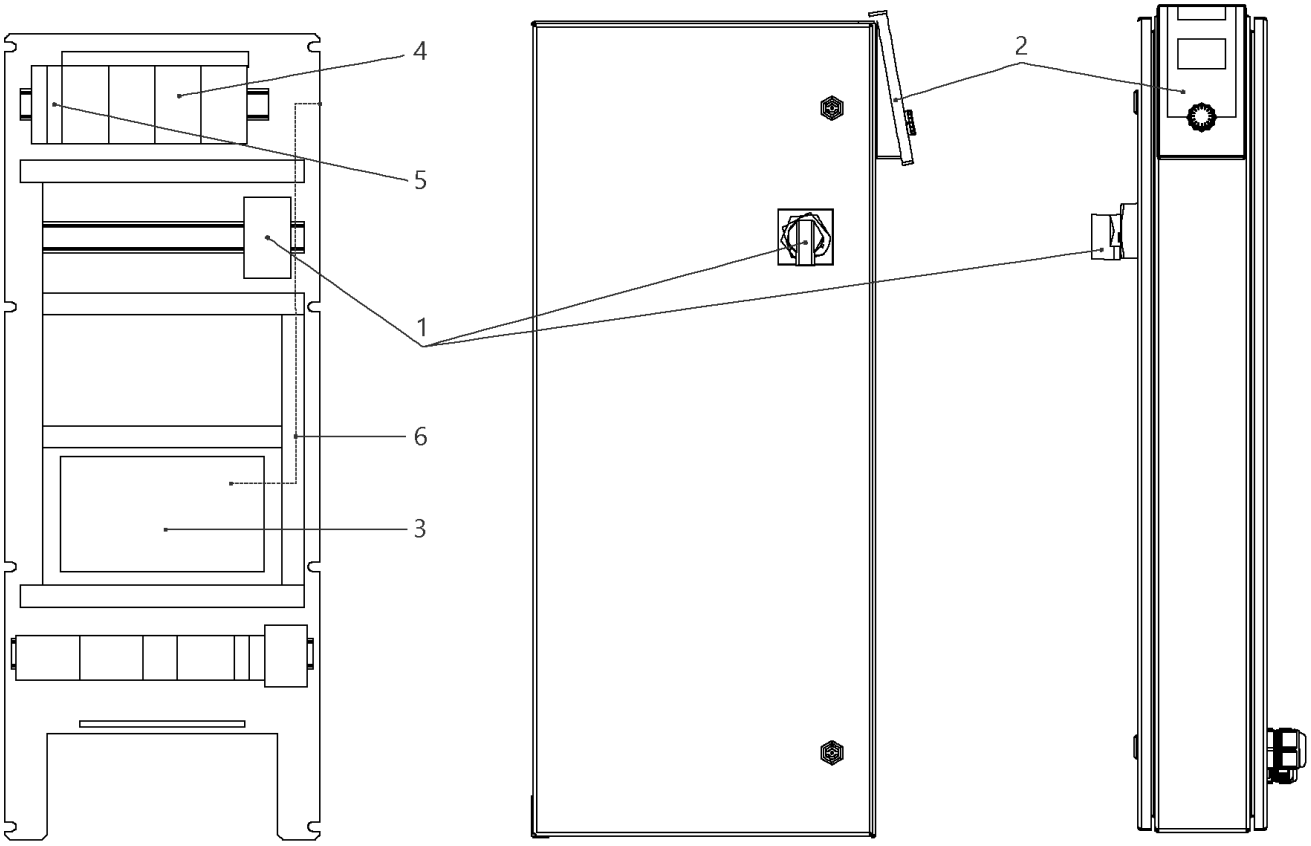
4
5
1
6
3
2

## W-CTRL-SCE-B-2x13A-T34-FM-ND2-AVC-PKG (2541905)

| Item | Article no. | Description | Quantity |
|---|---|---|---|
| 1 | 2104473 | MAIN SWITCH OT63F3 L105 KIT | 1 |
| Note: TO / BIS / JUSQU'AU 30/06/2015 | | | |
| 1 | 2104470 | MAIN SWITCH OT40F3 L250 KIT | 1 |
| Note: FROM / AB / À PARTIR DU 01/07/2015 | | | |
| 2 | 4184784 | CONTROL PANEL HMI SC KIT | 1 |
| 2 | 4185259 | ASSEMBLY DISPLAY SC PKG VP. | 1 |
| Note: DISPLAY ALONE / PLATINE SEULE | | | |
| 3 | 4185257 | ASSEMBLY CPU SCe Booster VP. | 1 |
| 4 | 2051217 | AUTOM.CIRCUIT BREAKER S203 B16 TO7,5kW | 1 |
| 5 | 2046288 | CIRCUIT BREAKER S201 B16 | 1 |
| 6 | 4194956 | PATCH CABLE RJ45 CAT6 1,0M BLUE SC-PANEL | 1 |

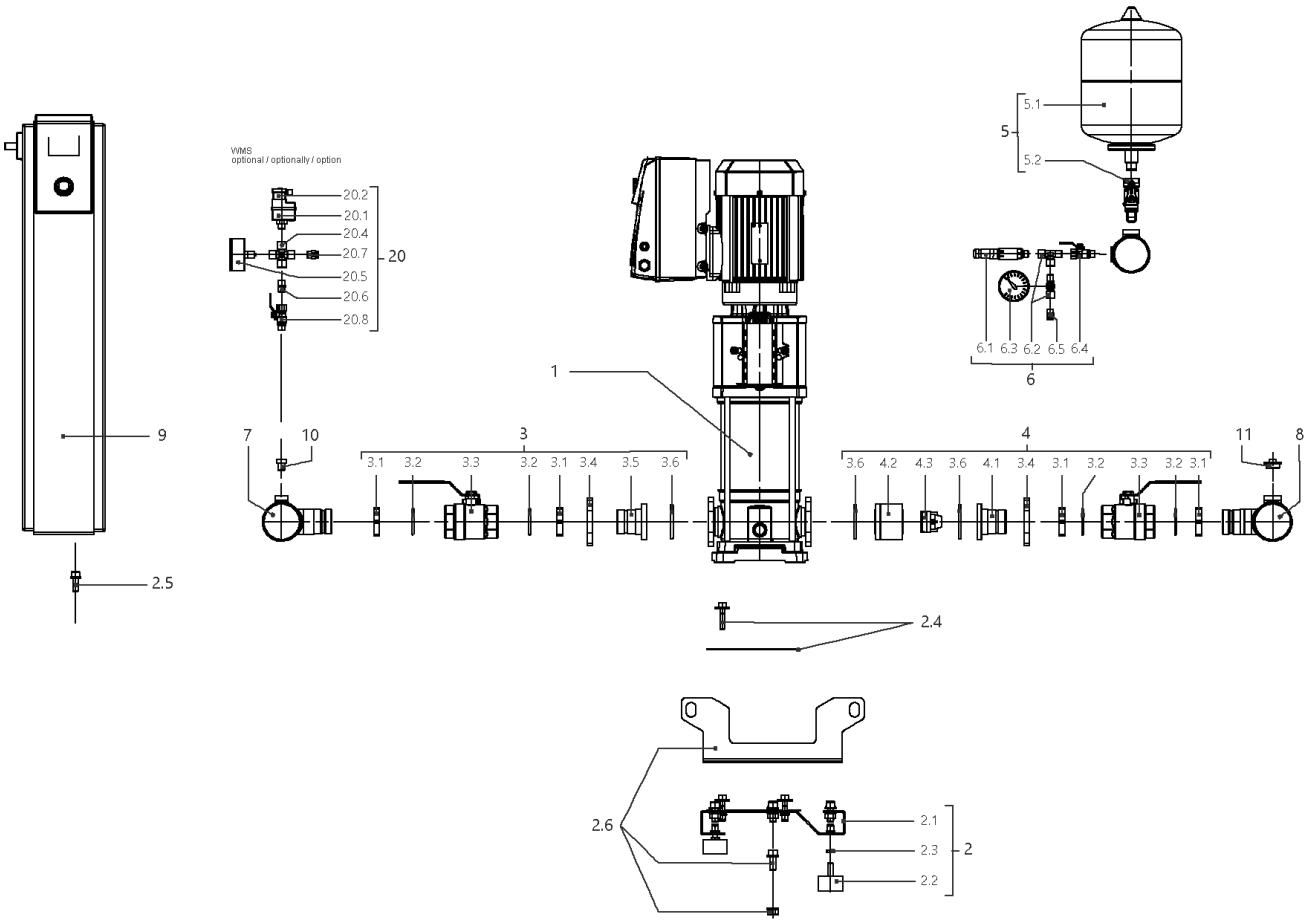
VVMS
optional / optionally / option
20.2
20.1
20.4
20.7
20.5
20.6
20.8
20
5.1
5
5.2
6.1 6.3 6.2 6.5 6.4
6
1
9
7
10
3
3.1 3.2 3.3 3.2 3.1 3.4 3.5 3.6
4
3.6 4.2 4.3 3.6 4.1 3.4 3.1 3.2 3.3 3.2 3.1
11
8
2.5
2.4
2.6
2.1
2.3
2.2
2

## SiBoost Smart 2HELIX VE1009 (2536348)

| Item | Article no. | Description | Quantity |
|---|---|---|---|
| 1 | | HELIX VE1009-1/16/E/KS/FF240/EC | 1 |
| 2 | 4197125 | BASE PLATE DE2 850x420 KIT | 1 |
| 2.1 | | > BASEPLATE_2x4/6/10/16V_E300_BOX_150 | 1 |
| 2.2 | 2028654 | > VIBRATION DAMPER D.50X30 M10X28 | 1 |
| 2.3 | 2028281 | > NUT M10 DIN936 (ISO4035) 17H VZ | 1 |
| 2.4 | 4197083 | > HOLDER PUMP Helix 10/16 KIT | 1 |
| 2.5 | 4197084 | > HOLDER SWITCHBOX WILO Smart Control KIT | 1 |
| 2.6 | 4197117 | > LIFTING Siboost HELIX SC KIT | 1 |
| 3 | 4197072 | SUCTION SIDE Siboost Helix10/16 KIT | 1 |
| 3.1 | 2032623 | > NUT G1 1/2"SW55 MS | 1 |
| 3.2 | 2032616 | > O-RING ID.44X3,53N DIN3771 E7502 | 1 |
| 3.2 | 2534877 | > BALL TAP KDW40-H G11/2I-I-DN40 DVGW | 1 |
| 3.4 | 2032626 | > OVAL FLANGE D52-LK100 ST-VZ | 1 |
| 3.5 | 2032627 | > UNION INSERT DN40 LAPPED FLANGE | 1 |
| 3.6 | 2032628 | > O-RING ID.56,52X5,33N DIN3771 E7502 | 1 |
| 4 | 4197074 | DELIVERY SIDE Siboost Helix V10 KIT | 1 |
| 3.1 | 2032623 | > NUT G1 1/2"SW55 MS | 1 |
| 3.2 | 2032616 | > O-RING ID.44X3,53N DIN3771 E7502 | 1 |
| 3.3 | 2534877 | > BALL TAP KDW40-H G11/2I-I-DN40 DVGW | 1 |
| 3.4 | 2032626 | > OVAL FLANGE D52-LK100 ST-VZ | 1 |
| 4.1 | 2054316 | > UNION INSERT DN40 LAPPED FLANGE(W.SLOT) | 1 |
| 4.2 | 2054317 | > HOUSING F.NON RETURN VALVE(RV-IN) DN40 | 1 |
| 4.3 | 2032631 | > NON-RETURN-DEVICE DN40 (MTR)TYP RV-IN | 1 |
| 3.6 | 2032628 | > O-RING ID.56,52X5,33N DIN3771 E7502 | 1 |
| 5 | 2032642 | DIAPHREM TANK 8L/PN16 DIN4807/T5 KIT | 1 |
| 5.1 | 2045914 | > DIAPHREM TANK 8L TYP-DD 16BAR | 1 |
| 5.2 | 2027853 | > FLOW FITTING G3/4 FOR DIAPHRAGM VES. | 1 |
| 6 | 4197076 | PRESSURE SENSOR/ GAUGE 0-16BAR KIT | 1 |
| 6.1 | 2085909 | > PRESS.SENSOR 1/4" 0-16BAR 4-20MA VP. | 1 |
| 6.2 | 4197077 | > T-PIECE 1/4" VP. | 1 |
| 6.3 | 2028692 | > PRESSURE GAUGE NG63-PN16-G1/4 | 1 |
| 6.4 | 2028291 | > BALL TAP R1/4" PN42 GIACOMINI R254DL | 1 |
| 6.5 | 2028691 | > BLOWGUN 1/4" MS 30BAR VP. | 1 |
| 7 | 4197123 | PIPE DE2 R21/2''-2x11/2"+1x1/4x600 VP. | 1 |

| Item | Article no. | Description | Quantity |
|---|---|---|---|
| 8 | 4197124 | PIPE DE2 R21/2''-2x11/2"+1x1/4+1x3/4x600 | 1 |
| 9 | | W-CTRL-SCE-B-2x5,5KW-T4-FM-ND2 | 1 |
| Note: TO / BIS / JUSQU'AU 18/05/2014 | | | |
| 9 | 2541905 | W-CTRL-SCE-B-2x13A-T34-FM-ND2-AVC-PKG | 1 |
| Note: FROM / AB / À PARTIR DU 19/05/2014 | | | |
| 10 | 4197079 | PLUG G1/4"x10 AISI304 KIT | 1 |
| 11 | 2032654 | PLUG R3/4" MS VIEGA 1751 | 1 |
| 20 | 2521150 | ASSEMBLY WMS. DE-EB. +VP | 1 |
| 20.1 | 2028652 | > PRESSURE SWITCH PS3-ASR 1/(1,3) VP. | 1 |
| 20.2 | 2130983 | > PLUG PS3-415 WITH KABEL 1,5M 2NO VP. | 1 |
| 20.4 | 2028290 | > CROSSPIECE R1/4" MS-NICKEL | 1 |
| 20.5 | 2028687 | > PRESSURE GAUGE NG63 R1/4" HI.0-6BAR | 1 |
| 20.6 | 2054268 | > DUAL NIPPLE G1/4" x G1/4" MS VP. | 1 |
| 20.7 | 2028691 | > BLOWGUN 1/4" MS 30BAR VP. | 1 |
| 20.8 | 2028291 | > BALL TAP R1/4" PN42 GIACOMINI R254DL | 1 |

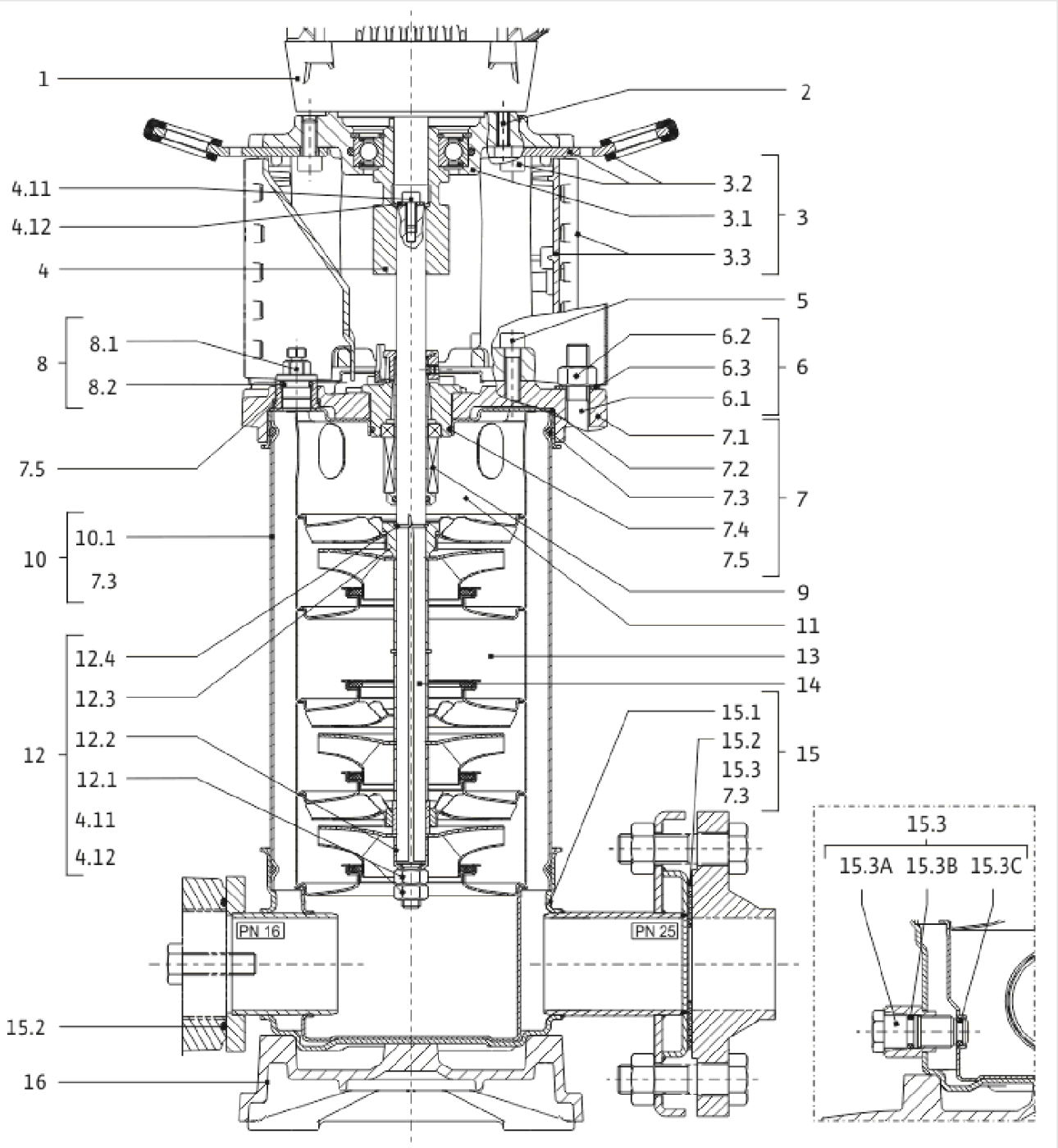
1
2
4.11
4.12
4
3.2
3.1
3.3
3
5
8
8.1
8.2
6.2
6.3
6.1
6
7.5
7.1
7.2
7.3
7.4
7.5
7
10
10.1
7.3
9
11
12
12.4
12.3
12.2
12.1
4.11
4.12
13
14
15.1
15.2
15.3
7.3
15
PN 16
PN 25
15.2
16
15.3
15.3A
15.3B
15.3C

| Item | Article no. | Description | Quantity |
|---|---|---|---|
| 1 | | DRIVE HELIX-VE1009-FF24-IE2-ATB KIT | 1 |
| Note: MOTOR BRAND SIEMENS | | | |
| 2 | 4174093 | SCREW M12X50 (4 PIECES) | 1 |
| 3 | 4197828 | LANTERN FF240 HELIX KIT | 1 |
| 3.1 | | > LANTERN FF240 M+6" JL250 MACHINING+CATA | 1 |
| 3.2 | 4186346 | > EYELET CPL.FF240 HELIX (4 PIECES) | 1 |
| 3.3 | 4159695 | > COUPLING PROTECTOR FF HELIX KIT | 1 |
| 4 | 4159711 | COUPLING D.16XD.38 FF265 HELIX KIT | 1 |
| 5 | 4159707 | SCREW M8X30 (4 PIECES) | 1 |
| 6 | 4177832 | STUD BOLT M12X527KIT | 1 |
| 6.1 | | > TIE BOLT M12-527x18x30-1.4057 | 1 |
| 6.2 | 2094647 | > NUT M12 M12 ISO4032 VP. | 1 |
| 6.3 | 2123557 | > WASHER CS-12.4-24-1.6-NFE25 (4 PIECES) | 1 |
| 7 | 4159685 | END SHIELD HELIX EPDM KIT | 1 |
| 7.1 | | > END SHIELD M+6" GJL250 MACHINING+CATA | 1 |
| 7.2 | 2127607 | > STATIONARY RING HOLDER 6" HELIX 1.4301 V | 1 |
| 7.3 | 4176513 | > O-RING FOR PUMP JACKET VP. | 1 |
| 7.4 | 2127603 | > O-RING ID.37,6x2,4 EPDM VP. | 1 |
| 7.5 | 2127602 | > O-RING ID.21,35x2 EPDM VP. | 1 |
| 8 | 4159686 | FILING/PURGING PLUG HELIX EPDM KIT | 1 |
| 9 | 4159696 | CARTRIDGE HELIX6-10-16 O/E KIT | 1 |
| 10 | 4177833 | HOUSING PIPES D.152X397 1.4301 KIT | 1 |
| 7.3 | 4176513 | > O-RING FOR PUMP JACKET VP. | 1 |
| 10.1 | | > HOUSING-PIPE Ø152-M+1009-304 | 1 |
| 11 | 4172791 | CENTERING STAGE-RETURN HELIX10 1.4301VP. | 1 |
| 12 | 4171332 | SHAFT EQUIPMENT HELIX V10 BI BLOC KIT | 1 |
| 4.11 | 4102901 | > SCREW CHC-M6X14-8.8-ISO4762-GEOMET500A | 1 |
| 4.12 | 2130995 | > SERRATED LOCK WASHER D.6,2XD.14,5X28 VP. | 1 |
| 12.1 | | > NUT-H-M10-A4.70 | 1 |
| 12.2 | | > SERRATED LOCK WASHER M+10M3-316L | 1 |
| 12.3 | | > STOP COLLAR OF IMPELLER L16,5-Ø16-316L | 1 |
| 12.4 | | > STOP-RUSH-1/2-D16xd2-M+316 | 1 |
| 13 | | HYDRAULIC HELIX V 1009 1.4307 | 1 |
| 14 | 4177837 | SHAFTS D.16X517,5 1.4301 VP. | 1 |

| Item | Article no. | Description | Quantity |
|---|---|---|---|
| 15 | 4159682 | PUMP HOUSING HELIX DN50 PN16 1.4301 KIT | 1 |
| 7.3 | 4176513 | > O-RING FOR PUMP JACKET VP. | 1 |
| 15.1 | | > BLASTING PPE HOUSING V-PN16-DN50-304 | 1 |
| 15.2 | 4217893 | > COUNTER FLANGE-G1"1/2-PN16-GJL KIT | 1 |
| 15.3 | 4171321 | > PRIMING/DRAIN PLUG EPDM HELIX KIT | 1 |
| 16 | 4176517 | BASEPLATE V8/10 VP. | 1 |

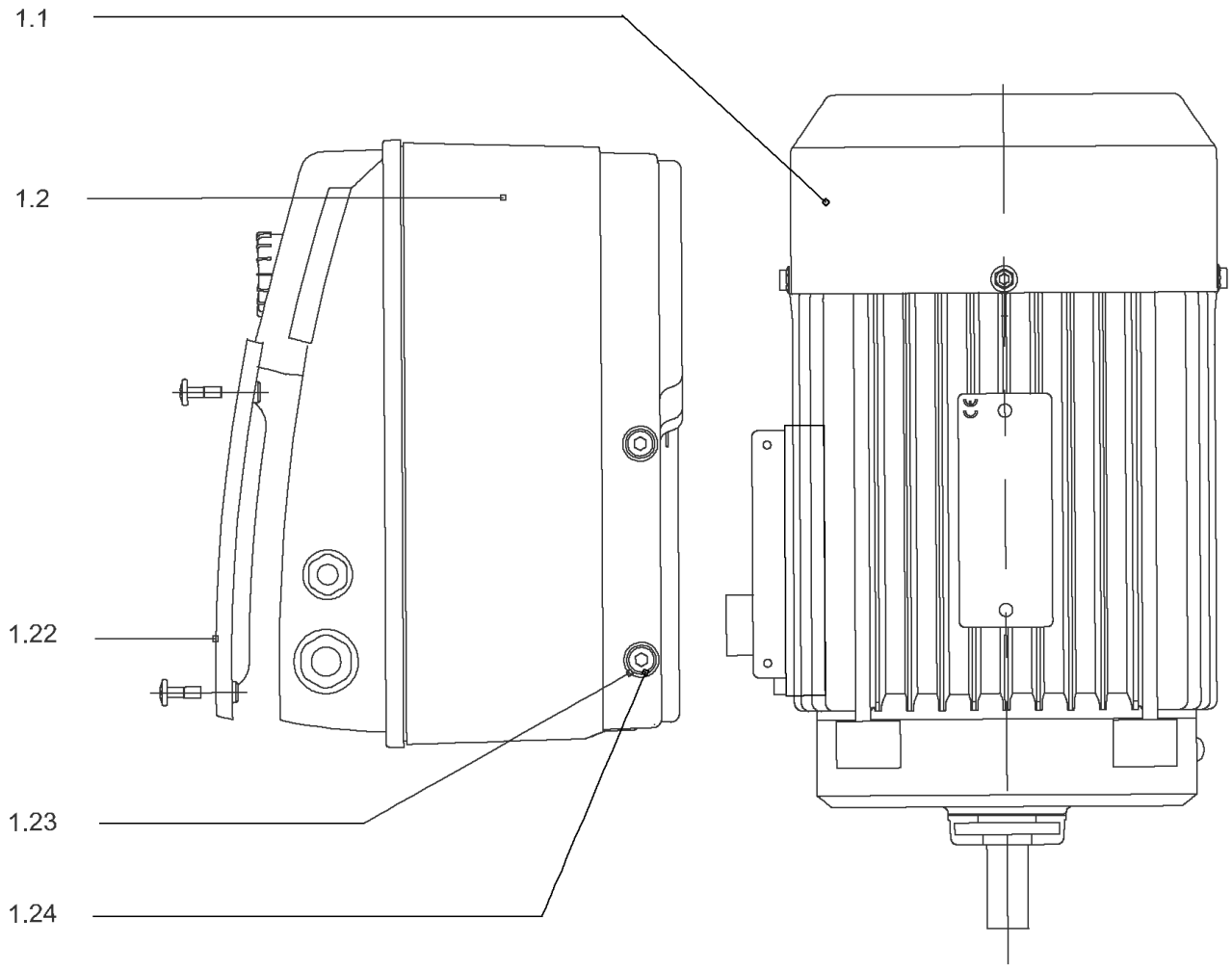
1.1
1.2
1.22
1.23
1.24

## DRIVE HELIX-VE1009-FF24-IE2-ATB KIT

| Item | Article no. | Description | Quantity |
|---|---|---|---|
| 1.1 | | MOTOR 5,5/2/132 FF240 3~380V 60HZ IE2 VP | 1 |
| Note: no longer available/nicht mehrlieferbar/n'est plus disponible | | | |
| | | SPARE PARTS MOTOR:ON REQUEST | 1 |
| 1.2 | 4186781 | MODULE HELIX-VE1009-IE2-ATB KIT | 1 |
| 1.22 | 2111344 | > MODULE COVER/GASKET TL5 KIT | 1 |
| 1.23 | 4215716 | > SCREW M5X16 DIN912 8.8 A2A (4pieces) VP. | 1 |
| 1.24 | 2057978 | > RONDELLE A5,3 DIN6797 FST ZN (4 PIECES) | 1 |

## COUPLING D.16XD.38 FF265 HELIX KIT (4159711)

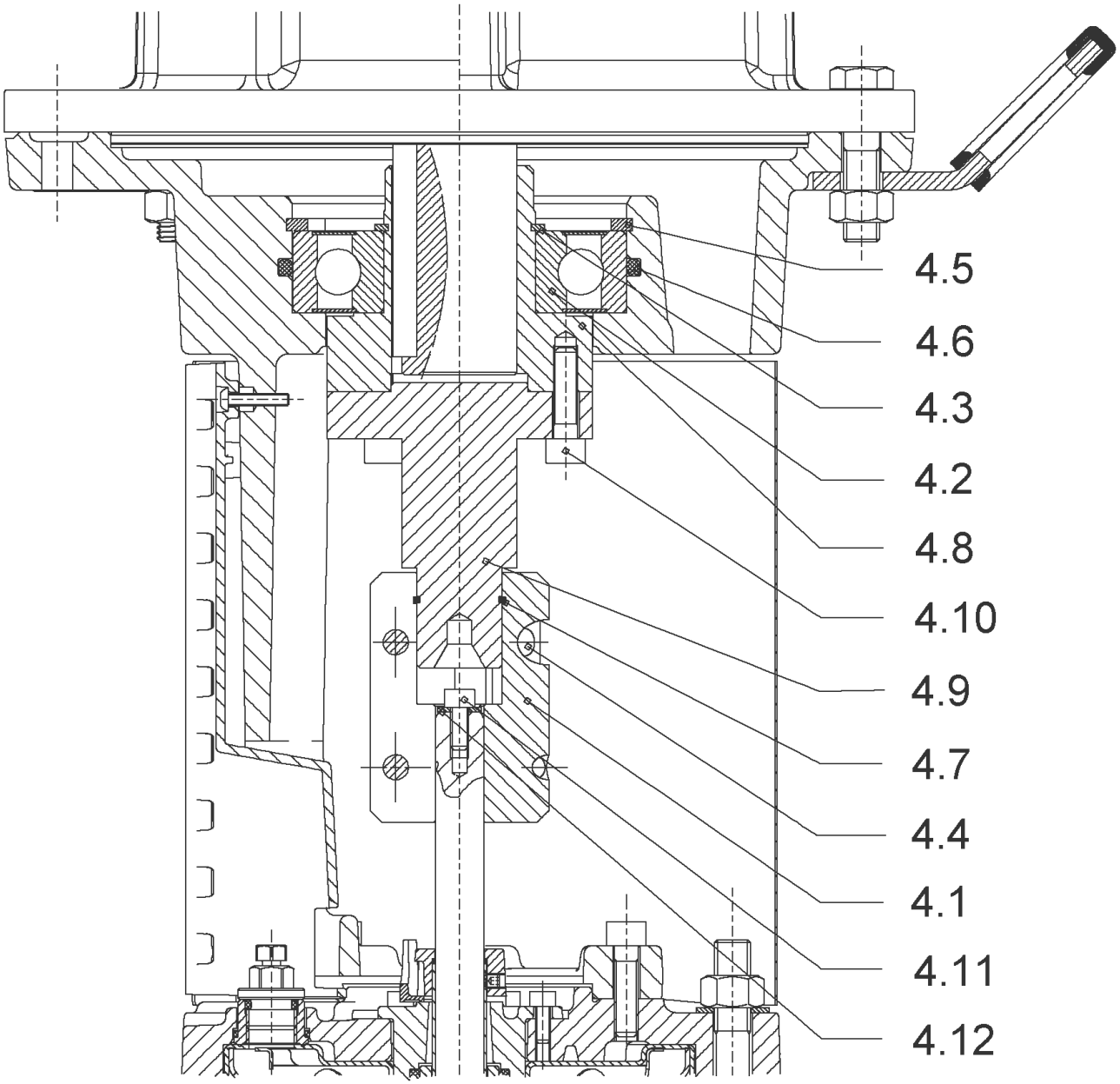

## COUPLING D.16XD.38 FF265 HELIX KIT (4159711)

| Item | Article no. | Description | Quantity |
|---|---|---|---|
| 4.1 | 2131018 | COUPLING 2 PARTS D.16XD.28XL.82,4 VP. | 1 |
| 4.2 | 2131017 | BALL BEARING 6310/ZZ-C4(HT)VP. | 1 |
| 4.3 | 4234253 | CIRCLIP-FOR-SHAFT-D50x2 VP. | 1 |
| 4.4 | 4157726 | SCREW KIT M8X30 (4 PIECES) | 1 |
| 4.5 | 4234255 | CIRCLIPS 110X4 VP. | 1 |
| 4.6 | 4233944 | O-RING ID.110 VP. | 1 |
| 4.7 | 2131019 | RETAINING RING D.26xD.2 DIN7993 VP. | 1 |
| 4.10 | 4157726 | SCREW KIT M8X30 (4 PIECES) | 1 |
| 4.11 | 4102901 | SCREW CHC-M6X14-8.8-ISO4762-GEOMET500A | 1 |
| 4.12 | 2130995 | SERRATED LOCK WASHER D.6,2XD.14,5X28 VP. | 1 |
| | | NOMEL CONTACT WASHER 8x16x1,4 STEEL ZC | 1 |
| 4.8 | 2131020 | HUB D.38XD.50 VP. | 1 |
| 4.9 | 2131021 | SPACER D.28XD.45 VP. | 1 |

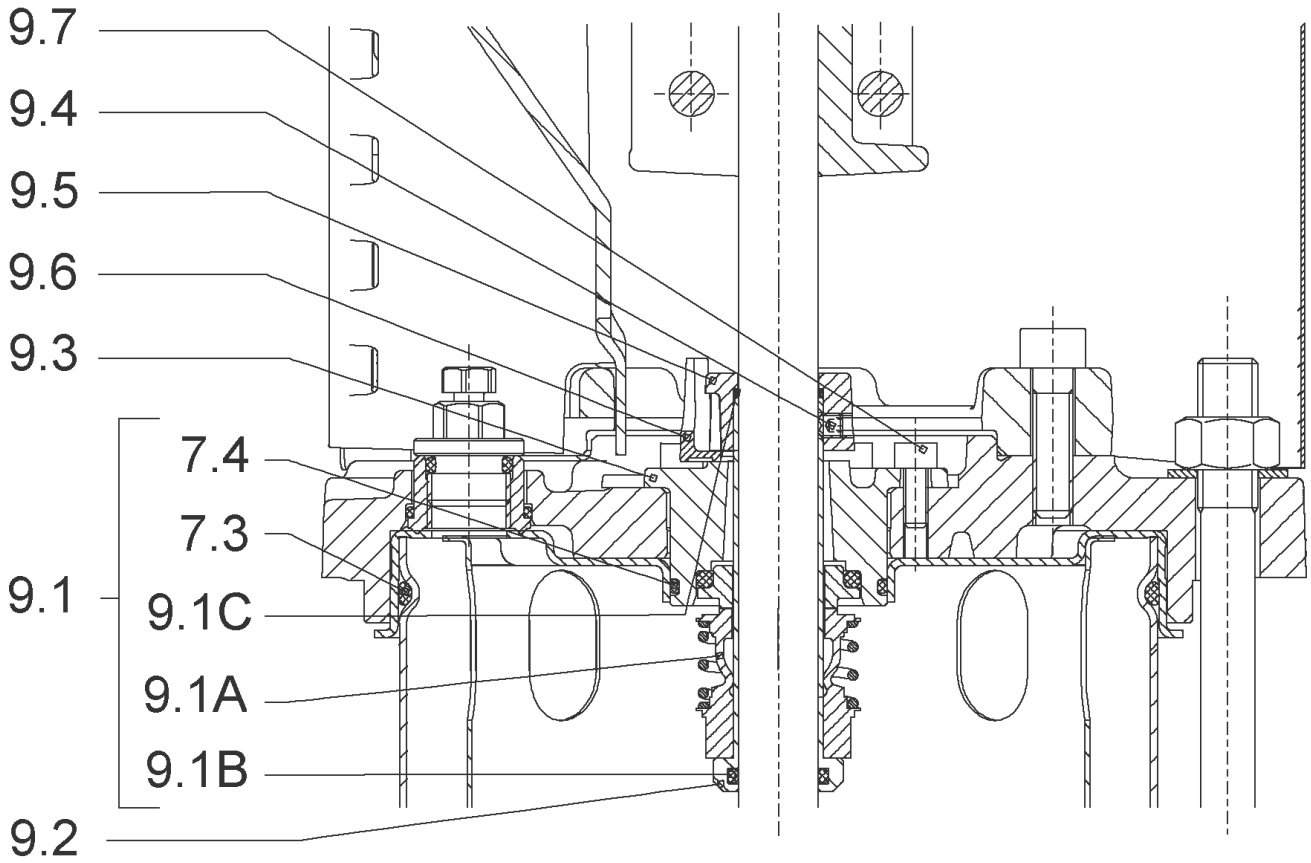
9.7
9.4
9.5
9.6
9.3
7.4
7.3
9.1
9.1C
9.1A
9.1B
9.2

## CARTRIDGE HELIX6-10-16 O/E KIT (4159696)

| Item | Article no. | Description | Quantity |
|---|---|---|---|
| 9.1 | 4159697 | SEAL-KIT-HELIX6-10-16 O/E | 1 |
| 7.3 | 4176513 | > O-RING FOR PUMP JACKET VP. | 1 |
| 7.4 | 2127603 | > O-RING ID.37,6x2,4 EPDM VP. | 1 |
| 9.1A | 2130966 | > MECH.SEAL HELIX2-4-6-10-16 O/E VP. | 1 |
| 9.1B | 2130967 | > O-RING D.16X2,5 EPDM VP. | 1 |
| 9.1C | 4176519 | > O-RING Ø16xØ1.25 VP. | 1 |
| 9.2 | 2130961 | SHAFT SLEEVE D.18/16X72,2 1.4404 VP. | 1 |
| 9.3 | 2130962 | RING HOLDER D.18 G606/G6 1.4301 VP. | 1 |
| 9.4 | 4176520 | SCREW CH M5x5 A4-70 ( 3PIECES ) | 1 |
| 9.5 | 2130963 | DRIVE RING D.29/18x12,4 MACH.VP. | 1 |
| 9.6 | 2130964 | TOOL M.S.CART.HELIX VP. | 1 |
| 9.7 | 2130965 | SCREW CHC M5X12 ISO4762 A2.70(4 PIECES) | 1 |

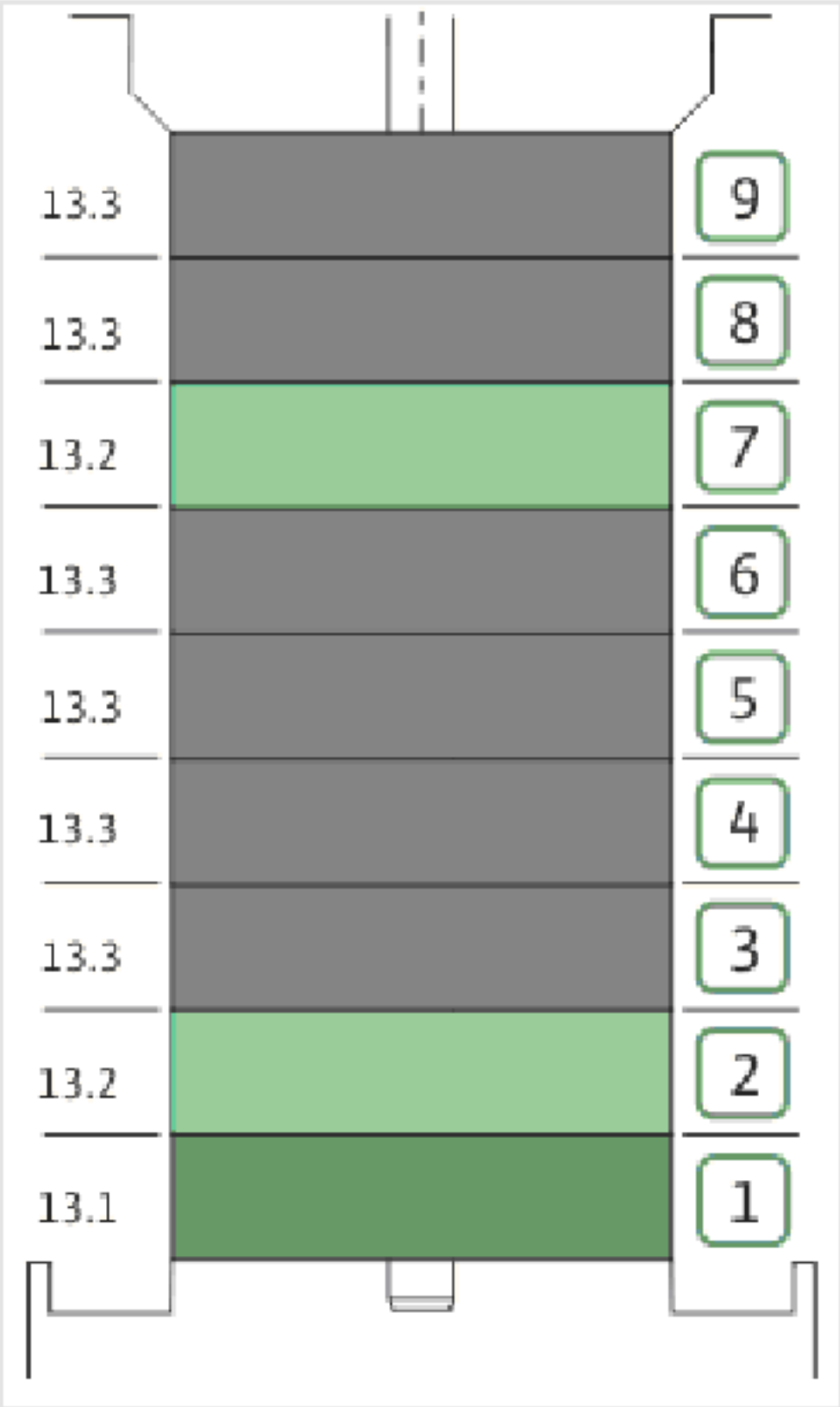
13.3
13.3
13.2
13.3
13.3
13.3
13.3
13.2
13.1
9
8
7
6
5
4
3
2
1

| Item | Article no. | Description | Quantity |
|---|---|---|---|
| 13.1 | 4171331 | STAGE HELIX10 1.4301KIT | 1 |
| | | > MACH.STG-CASING-WOGV-WNR-M+10-304 | 1 |
| | | > IMPELLER-M+10-304 | 1 |
| 13.2 | 4172792 | INTERMEDIATE STAGE HELIX 10 1.4301 KIT | 1 |
| | | > MACH.BEARING-STG-CASING-WNR-M+10-304 | 1 |
| | | > IMPELLER-M+10-304 | 1 |
| | | > SHAFT SLEEVE-SPACER-Ø19,35x18,465-304 | 1 |
| | | > SHAFT-SLEEVE-D16xD20x18-CW | 1 |
| 13.3 | 4172793 | INTERMEDIATE STAGE HELIX 10 1.4301 KIT | 1 |
| | | > MACH.STD-STG-CASING-WGV+NR-M+10-304 | 1 |
| | | > IMPELLER-M+10-304 | 1 |
| | | > IMPELLER SPACER Ø16,05X19,45-L36,465-304 | 1 |

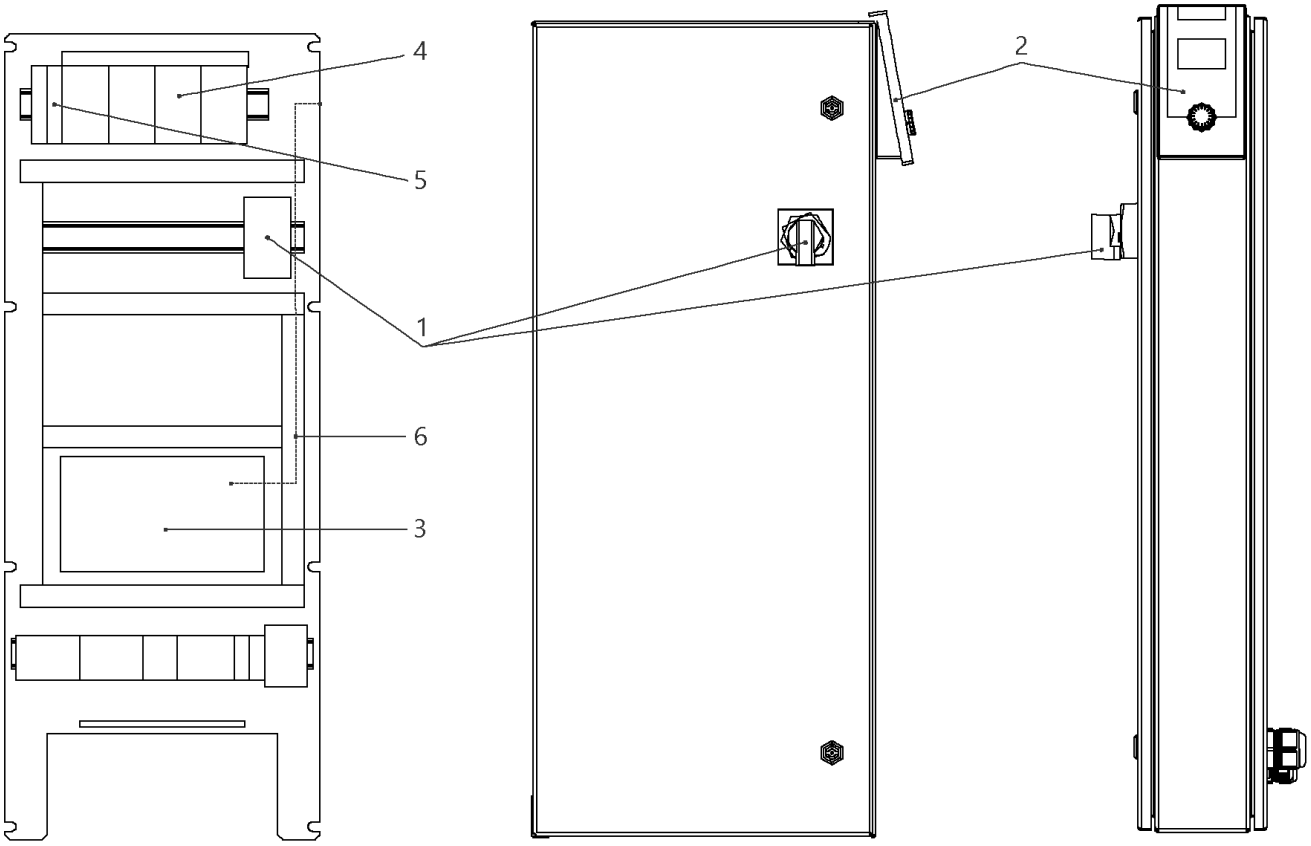
4
5
1
6
3
2

## W-CTRL-SCE-B-2x5,5KW-T4-FM-ND2

| Item | Article no. | Description | Quantity |
|---|---|---|---|
| 1 | 2104470 | MAIN SWITCH OT40F3 L250 KIT | 1 |
| 2 | 4184784 | CONTROL PANEL HMI SC KIT | 1 |
| 2 | 4185259 | ASSEMBLY DISPLAY SC PKG VP. | 1 |
| 3 | 4185257 | ASSEMBLY CPU SCe Booster VP. | 1 |
| 4 | 2051217 | AUTOM.CIRCUIT BREAKER S203 B16 TO7,5kW | 1 |
| 5 | 2046288 | CIRCUIT BREAKER S201 B16 | 1 |
| 6 | 4194956 | PATCH CABLE RJ45 CAT6 1,0M BLUE SC-PANEL | 1 |

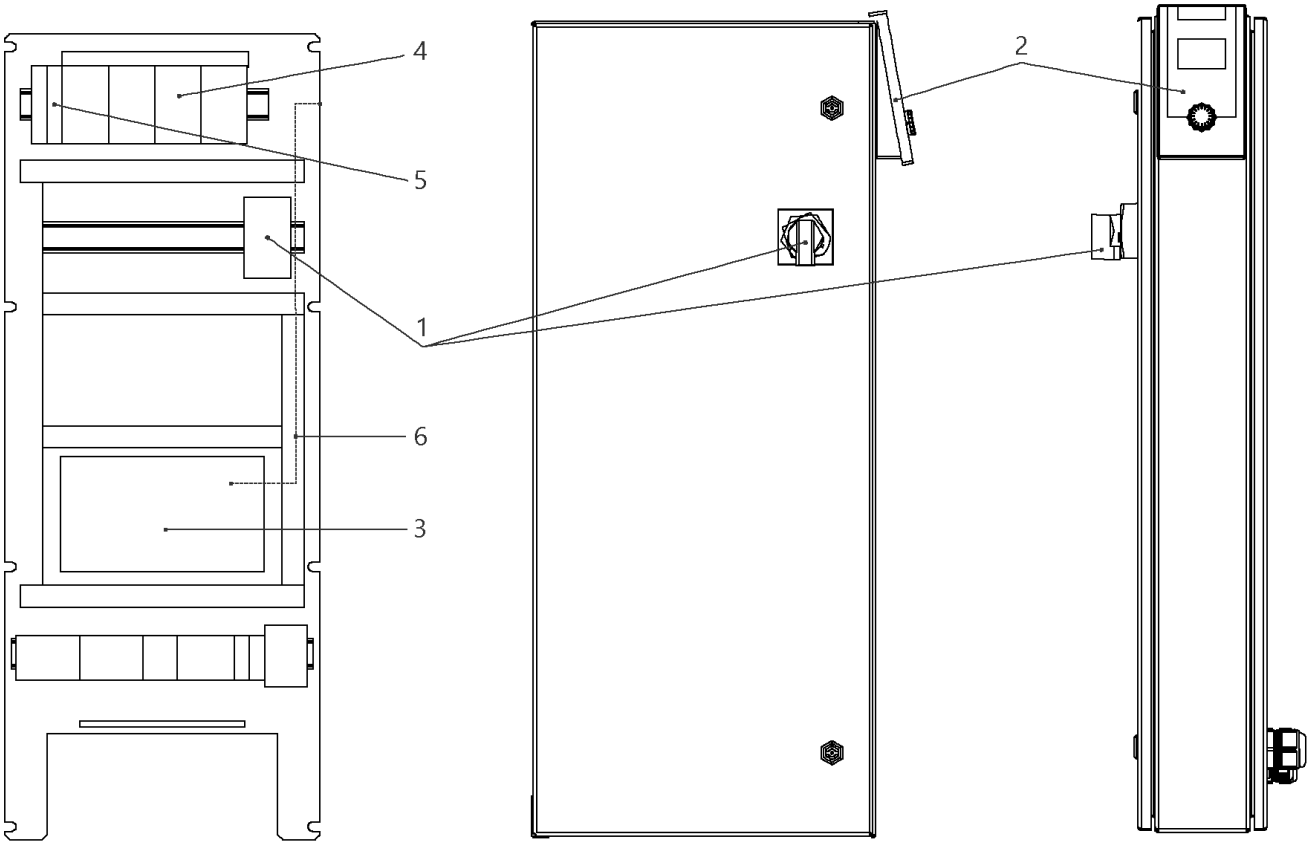
4
5
1
6
3
2

## W-CTRL-SCE-B-2x13A-T34-FM-ND2-AVC-PKG (2541905)

| Item | Article no. | Description | Quantity |
|---|---|---|---|
| 1 | 2104473 | MAIN SWITCH OT63F3 L105 KIT | 1 |
| Note: TO / BIS / JUSQU'AU 30/06/2015 | | | |
| 1 | 2104470 | MAIN SWITCH OT40F3 L250 KIT | 1 |
| Note: FROM / AB / À PARTIR DU 01/07/2015 | | | |
| 2 | 4184784 | CONTROL PANEL HMI SC KIT | 1 |
| 2 | 4185259 | ASSEMBLY DISPLAY SC PKG VP. | 1 |
| Note: DISPLAY ALONE / PLATINE SEULE | | | |
| 3 | 4185257 | ASSEMBLY CPU SCe Booster VP. | 1 |
| 4 | 2051217 | AUTOM.CIRCUIT BREAKER S203 B16 TO7,5kW | 1 |
| 5 | 2046288 | CIRCUIT BREAKER S201 B16 | 1 |
| 6 | 4194956 | PATCH CABLE RJ45 CAT6 1,0M BLUE SC-PANEL | 1 |

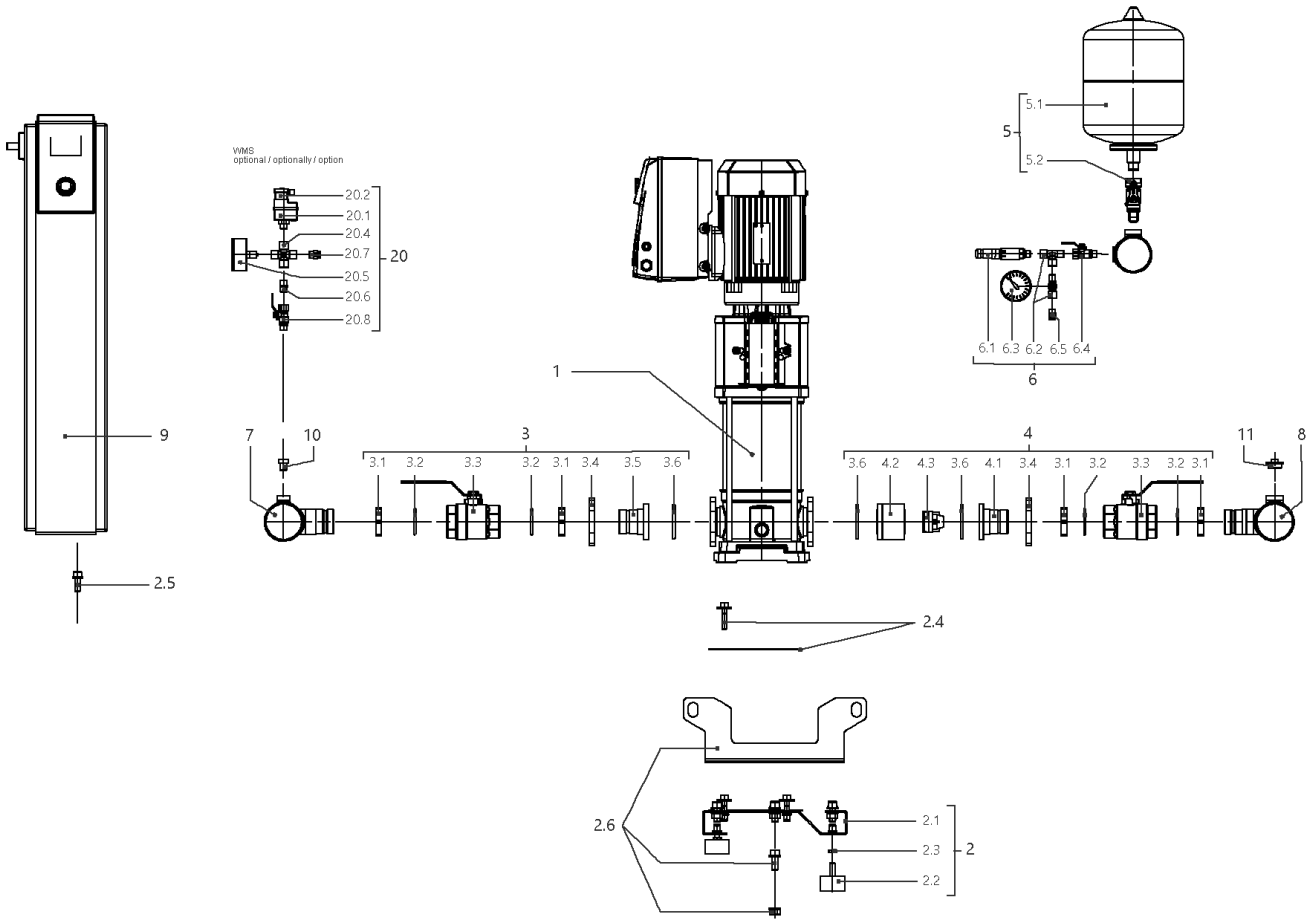
VVMS
optional / optionally / option
20.2
20.1
20.4
20.7
20.5
20.6
20.8
20
5.1
5
5.2
6.1 6.3 6.2 6.5 6.4
6
1
9
7
10
3
3.1 3.2 3.3 3.2 3.1 3.4 3.5 3.6
4
3.6 4.2 4.3 3.6 4.1 3.4 3.1 3.2 3.3 3.2 3.1
11
8
2.5
2.4
2.6
2.1
2.3
2.2
2

## SiBoost Smart 2HELIX VE1602 (2536333)

| Item | Article no. | Description | Quantity |
|---|---|---|---|
| 1 | | HELIX VE1602-1/16/E/S | 1 |
| Note: TO / BIS / JUSQU'AU 31/03/2016 | | | |
| 1 | 4201557 | HELIX VE1602-1/16/E/S | 1 |
| Note: FROM / AB / À PARTIR DU 01/04/2016 | | | |
| 2 | 4197125 | BASE PLATE DE2 850x420 KIT | 1 |
| 2.1 | | > BASEPLATE_2x4/6/10/16V_E300_BOX_150 | 1 |
| 2.2 | 2028654 | > VIBRATION DAMPER D.50X30 M10X28 | 1 |
| 2.3 | 2028281 | > NUT M10 DIN936 (ISO4035) 17H VZ | 1 |
| 2.4 | 4197083 | > HOLDER PUMP Helix 10/16 KIT | 1 |
| 2.5 | 4197084 | > HOLDER SWITCHBOX WILO Smart Control KIT | 1 |
| 2.6 | 4197117 | > LIFTING Siboost HELIX SC KIT | 1 |
| 3 | 4197072 | SUCTION SIDE Siboost Helix10/16 KIT | 1 |
| 3.1 | 2032623 | > NUT G1 1/2"SW55 MS | 1 |
| 3.2 | 2032616 | > O-RING ID.44X3,53N DIN3771 E7502 | 1 |
| 3.2 | 2534877 | > BALL TAP KDW40-H G11/2I-I-DN40 DVGW | 1 |
| 3.4 | 2032626 | > OVAL FLANGE D52-LK100 ST-VZ | 1 |
| 3.5 | 2032627 | > UNION INSERT DN40 LAPPED FLANGE | 1 |
| 3.6 | 2032628 | > O-RING ID.56,52X5,33N DIN3771 E7502 | 1 |
| 4 | 4197829 | DELIVERY SIDE Siboost Helix V16 KIT | 1 |
| 3.1 | 2032623 | > NUT G1 1/2"SW55 MS | 1 |
| 3.2 | 2032616 | > O-RING ID.44X3,53N DIN3771 E7502 | 1 |
| 3.3 | 2534877 | > BALL TAP KDW40-H G11/2I-I-DN40 DVGW | 1 |
| 3.4 | 2032626 | > OVAL FLANGE D52-LK100 ST-VZ | 1 |
| 4.1 | 2054274 | > UNION INSERT DN40 LAPPED FLANGE(W.COLLAR | 1 |
| 4.2 | 2054270 | > HOUSING RFV(RV-IN) DN50 MS VP. | 1 |
| 4.3 | 2028284 | > NON-RETURN DEVICE UNIT NV50/DN50 VP. | 1 |
| 3.6 | 2032628 | > O-RING ID.56,52X5,33N DIN3771 E7502 | 1 |
| 5 | 2032642 | DIAPHREM TANK 8L/PN16 DIN4807/T5 KIT | 1 |
| 5.1 | 2045914 | > DIAPHREM TANK 8L TYP-DD 16BAR | 1 |
| 5.2 | 2027853 | > FLOW FITTING G3/4 FOR DIAPHRAGM VES. | 1 |
| 6 | 4197076 | PRESSURE SENSOR/ GAUGE 0-16BAR KIT | 1 |
| 6.1 | 2085909 | > PRESS.SENSOR 1/4" 0-16BAR 4-20MA VP. | 1 |
| 6.2 | 4197077 | > T-PIECE 1/4" VP. | 1 |
| 6.3 | 2028692 | > PRESSURE GAUGE NG63-PN16-G1/4 | 1 |

| Item | Article no. | Description | Quantity |
|---|---|---|---|
| 6.4 | 2028291 | > BALL TAP R1/4" PN42 GIACOMINI R254DL | 1 |
| 6.5 | 2028691 | > BLOWGUN 1/4" MS 30BAR VP. | 1 |
| 7 | 4197830 | PIPE DE2 3''-2x11/2"+1x1/4x600 VP. | 1 |
| 8 | 4197831 | PIPE DE2 3''-2x11/2"+1x1/4+1x3/4x600 VP. | 1 |
| 9 | | W-CTRL-SCE-B-2x2,2KW-T4-FM-ND2 | 1 |
| Note: TO / BIS / JUSQU'AU 18/05/2014 | | | |
| 9 | 2541901 | W-CTRL-SCE-B-2x10A-T34-FM-ND2-AVC-PKG | 1 |
| Note: FROM / AB / À PARTIR DU 19/05/2014 | | | |
| 10 | 4197079 | PLUG G1/4"x10 AISI304 KIT | 1 |
| 11 | 2032654 | PLUG R3/4" MS VIEGA 1751 | 1 |
| 20 | 2521150 | ASSEMBLY WMS. DE-EB. +VP | 1 |
| 20.1 | 2028652 | > PRESSURE SWITCH PS3-ASR 1/(1,3) VP. | 1 |
| 20.2 | 2130983 | > PLUG PS3-415 WITH KABEL 1,5M 2NO VP. | 1 |
| 20.4 | 2028290 | > CROSSPIECE R1/4" MS-NICKEL | 1 |
| 20.5 | 2028687 | > PRESSURE GAUGE NG63 R1/4" HI.0-6BAR | 1 |
| 20.6 | 2054268 | > DUAL NIPPLE G1/4" x G1/4" MS VP. | 1 |
| 20.7 | 2028691 | > BLOWGUN 1/4" MS 30BAR VP. | 1 |
| 20.8 | 2028291 | > BALL TAP R1/4" PN42 GIACOMINI R254DL | 1 |

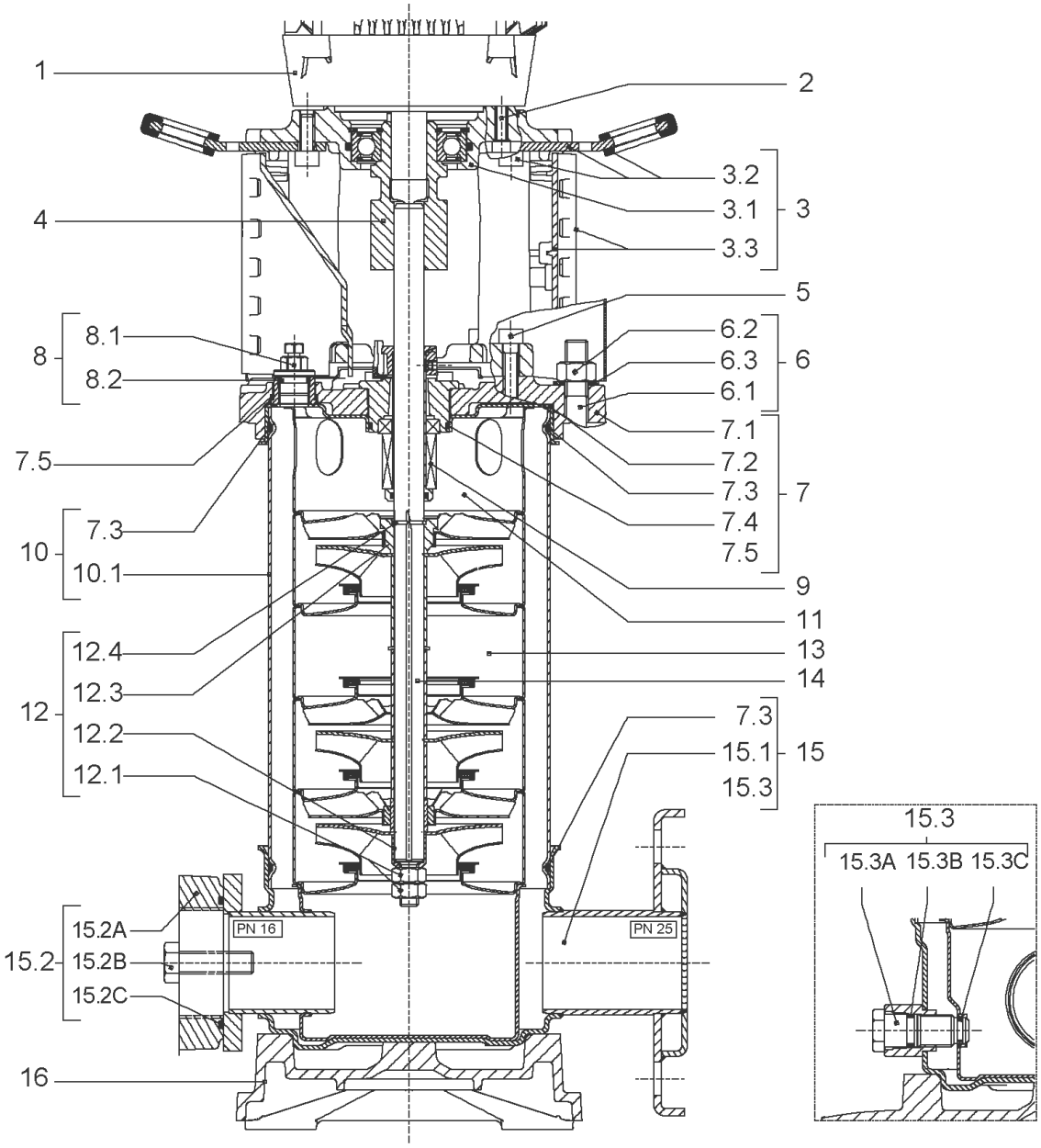
1
2
3.2
3.1
3
3.3
4
5
8.1
8
8.2
6.2
6.3
6
6.1
7.1
7.5
7.2
7.3
7
7.4
7.3
10
7.5
10.1
9
11
12.4
13
12.3
14
12
12.2
7.3
15.1
15
12.1
15.3
15.3
15.3A 15.3B 15.3C
15.2A
PN 16
PN 25
15.2
15.2B
15.2C
16

| Item | Article no. | Description | Quantity |
|---|---|---|---|
| 1 | | DRIVE HELIX-VE1602-IE2-ATB KIT | 1 |
| Note: MOTOR BRAND ATB | | | |
| 1 | | DRIVE HELIX-VE1602-IE2-WE KIT | 1 |
| Note: MOTOR BRAND WILO ELEC | | | |
| 1 | | DRIVE HELIX-VE1602-IE4-WE KIT | 1 |
| Note: MOTOR BRAND WILO ELEC | | | |
| 2 | 4159703 | SCREW M8X40 (4 PIECES) | 1 |
| 3 | 4172795 | LANTERNE FT115 HELIX KIT | 1 |
| 3.1 | | > M+5_6_LANTERN_ONE-PIECE_FT115_CATA | 1 |
| 3.2 | 2127604 | > EYELET CPL.FT HELIX(2 PIECES) | 1 |
| 3.3 | 4159692 | > COUPLING PROTECTOR FT HELIX KIT | 1 |
| 4 | 4159709 | COUPLING D.16xD.24 FT115 HELIX KIT | 1 |
| 5 | 4159707 | SCREW M8X30 (4 PIECES) | 1 |
| 6 | 2018368 | STUD BOLT M12X289 KIT | 1 |
| 6.1 | | > TIE BOLT M12-289x18x30-1.4057 | 1 |
| 6.2 | 2094647 | > NUT M12 M12 ISO4032 VP. | 1 |
| 6.3 | 2123557 | > WASHER CS-12.4-24-1.6-NFE25 (4 PIECES) | 1 |
| 7 | 4210143 | STATIONARY RING HOLDER HELIX 6" EPDM | 1 |
| 7.2 | 2127607 | > STATIONARY RING HOLDER 6" HELIX 1.4301 V | 1 |
| 7.3 | 4176513 | > O-RING FOR PUMP JACKET VP. | 1 |
| 7.4 | 2127603 | > O-RING ID.37,6x2,4 EPDM VP. | 1 |
| 7.5 | 2127602 | > O-RING ID.21,35x2 EPDM VP. | 1 |
| 8 | 4159686 | FILING/PURGING PLUG HELIX EPDM KIT | 1 |
| 9 | 4171327 | SEAL-KIT-HELIX6-10-16 O/E KIT | 1 |
| 10 | 2127574 | HOUSING PIPE D.152x160 1.4301 KIT | 1 |
| 7.3 | 4176513 | > O-RING FOR PUMP JACKET VP. | 1 |
| 10.1 | | > HOUSING-PIPE Ø152-M+1601/02-304 | 1 |
| 11 | 2127588 | CENTERING STAGE-RETURN HELIX16 1.4301 VP | 1 |
| 12 | 4209329 | SHAFT EQUIPMENT HELIX V16 KIT | 1 |
| 12.1 | | > NUT-H-M10-A4.70 | 1 |
| 12.2 | | > SERRATED LOCK WASHER M+16M3-316L | 1 |
| 12.3 | | > IMPELLER STOP RING L35,9-304 | 1 |
| 12.4 | | > STOP-RUSH-1/2-D16xd2-M+316 | 1 |
| 13 | | HYDRAULIC HELIX V 1602 1.4307 | 1 |

| Item | Article no. | Description | Quantity |
|---|---|---|---|
| 14 | 2127563 | SHAFT D.16X280 1.4301 VP. | 1 |
| 15 | 4217899 | PUMP HOUSING HELIX DN50 PN16 1.4301 KIT | 1 |
| 7.3 | 4176513 | > O-RING FOR PUMP JACKET VP. | 1 |
| 15.1 | | > BLASTING PPE HOUSING V-PN16-DN50-304 | 1 |
| 15.2 | 4217895 | > COUNTER FLANGE-G2"-PN16-GJL KIT | 1 |
| 15.3 | 4171321 | > PRIMING/DRAIN PLUG EPDM HELIX KIT | 1 |
| 16 | 2127601 | BASEPLATE HELIX V16 VP. | 1 |

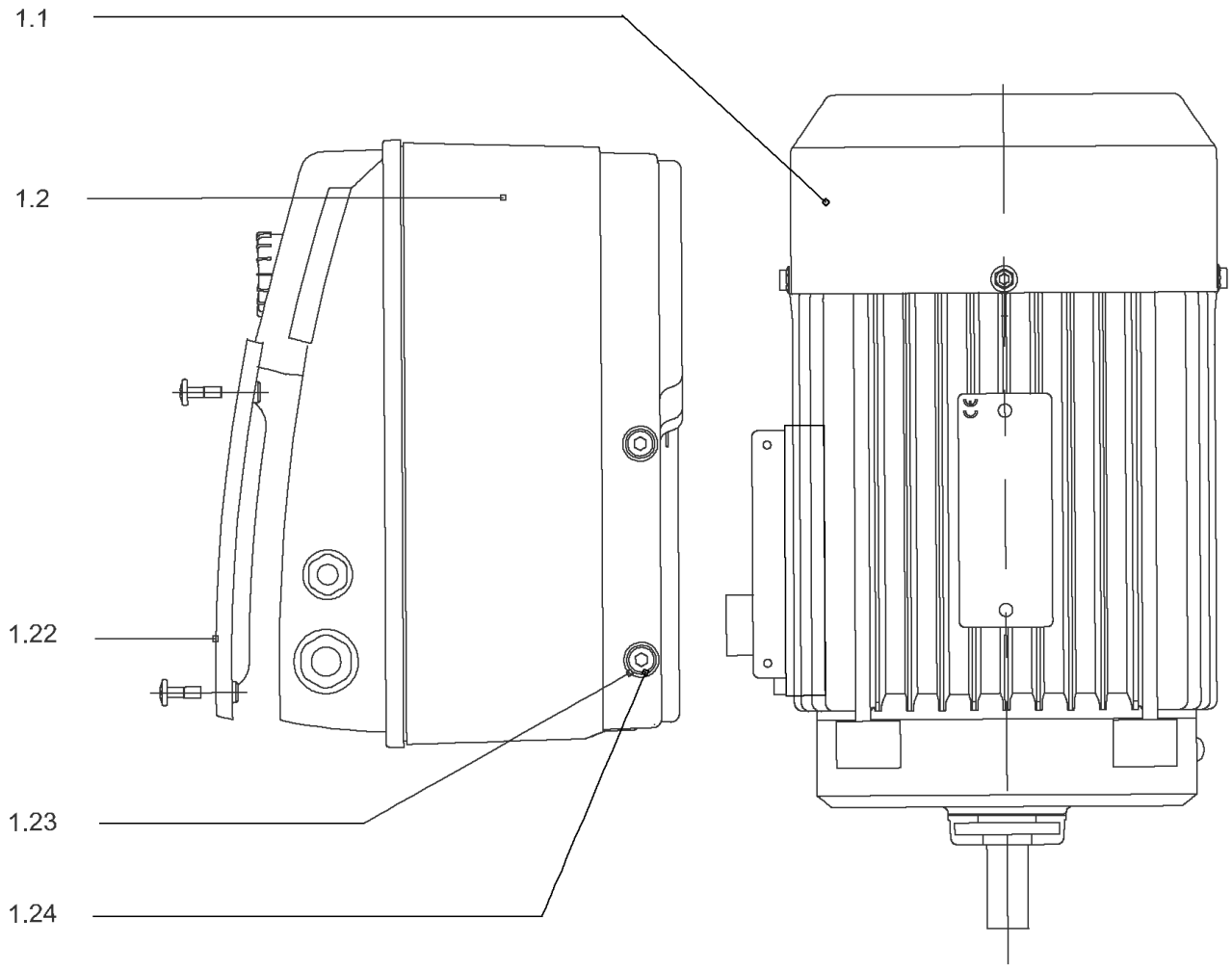
1.1
1.2
1.22
1.23
1.24

## DRIVE HELIX-VE1602-IE2-ATB KIT

| Item | Article no. | Description | Quantity |
|---|---|---|---|
| 1.1 | | M2,2-2T638P55V18-90F11-SU-N24-ADAPT-IE2 | 1 |
| Note: no longer available/nicht mehrlieferbarn'est plus disponible | | | |
| | | SPARE PARTS MOTOR:ON REQUEST | 1 |
| 1.2 | 4220618 | MODULE HELIX-VE1602-IE2-ATB KIT | 1 |
| 1.22 | 2054227 | > MODULE COVER/GASKET TL3/4 KIT | 1 |
| 1.23 | 4215716 | > SCREW M5X16 DIN912 8.8 A2A (4pieces) VP. | 1 |
| 1.24 | 2057978 | > RONDELLE A5,3 DIN6797 FST ZN (4 PIECES) | 1 |

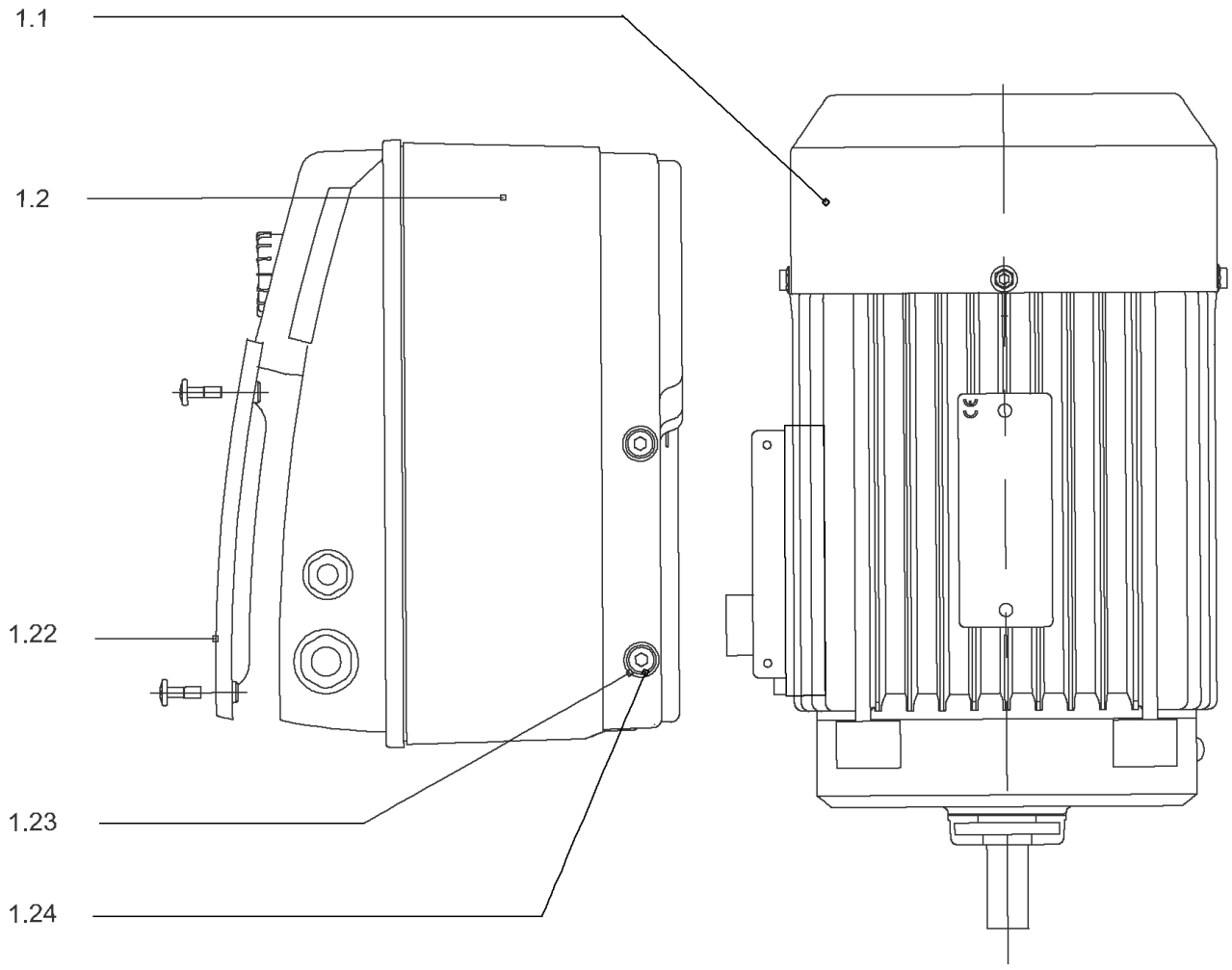
1.1
1.2
1.22
1.23
1.24

## DRIVE HELIX-VE1602-IE2-WE KIT

| Item | Article no. | Description | Quantity |
|---|---|---|---|
| 1.1 | 4185016 | MOTOR 2,2/2/90 3~ 380V 60HZ IE2 WE VP. | 1 |
| | | SPARE PARTS MOTOR:ON REQUEST | 1 |
| 1.2 | 4185020 | MODULE HELIX-VE1602-IE2-WE KIT | 1 |
| 1.22 | 2054227 | > MODULE COVER/GASKET TL3/4 KIT | 1 |
| 1.23 | 4215716 | > SCREW M5X16 DIN912 8.8 A2A (4pieces) VP. | 1 |
| 1.24 | 2057978 | > RONDELLE A5,3 DIN6797 FST ZN (4 PIECES) | 1 |

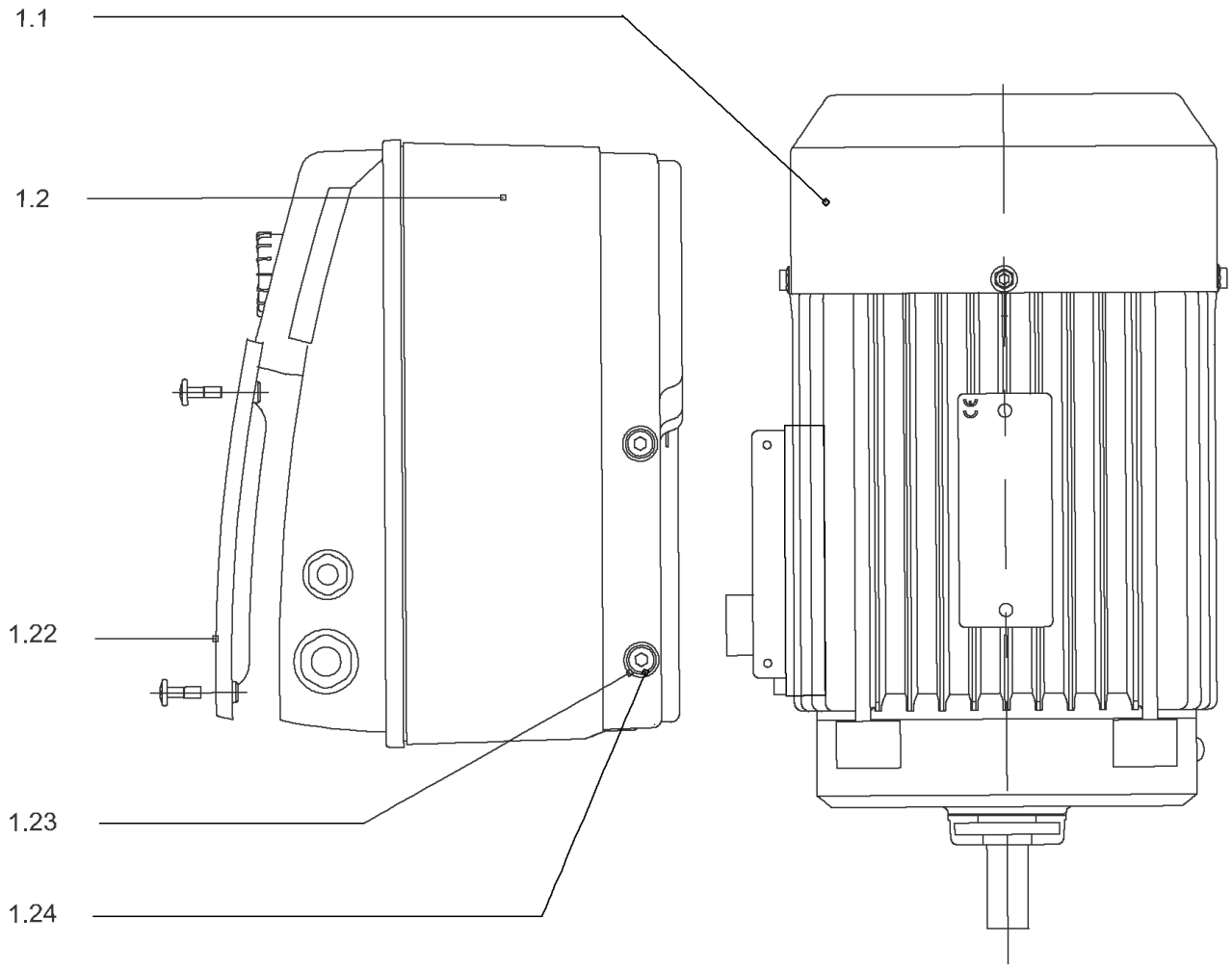
1.1
1.2
1.22
1.23
1.24

## DRIVE HELIX-VE1602-IE4-WE KIT

| Item | Article no. | Description | Quantity |
|---|---|---|---|
| 1.1 | 4207920 | MOTOR 2.2/2/90 3~ 380V 60HZ IE4 WE VP. | 1 |
| | | SPARE PARTS MOTOR:ON REQUEST | 1 |
| 1.2 | 4209593 | MODULE HELIX-VE1602-IE4-WE KIT | 1 |
| 1.22 | 2054227 | > MODULE COVER/GASKET TL3/4 KIT | 1 |
| 1.23 | 4215716 | > SCREW M5X16 DIN912 8.8 A2A (4pieces) VP. | 1 |
| 1.24 | 2057978 | > RONDELLE A5,3 DIN6797 FST ZN (4 PIECES) | 1 |

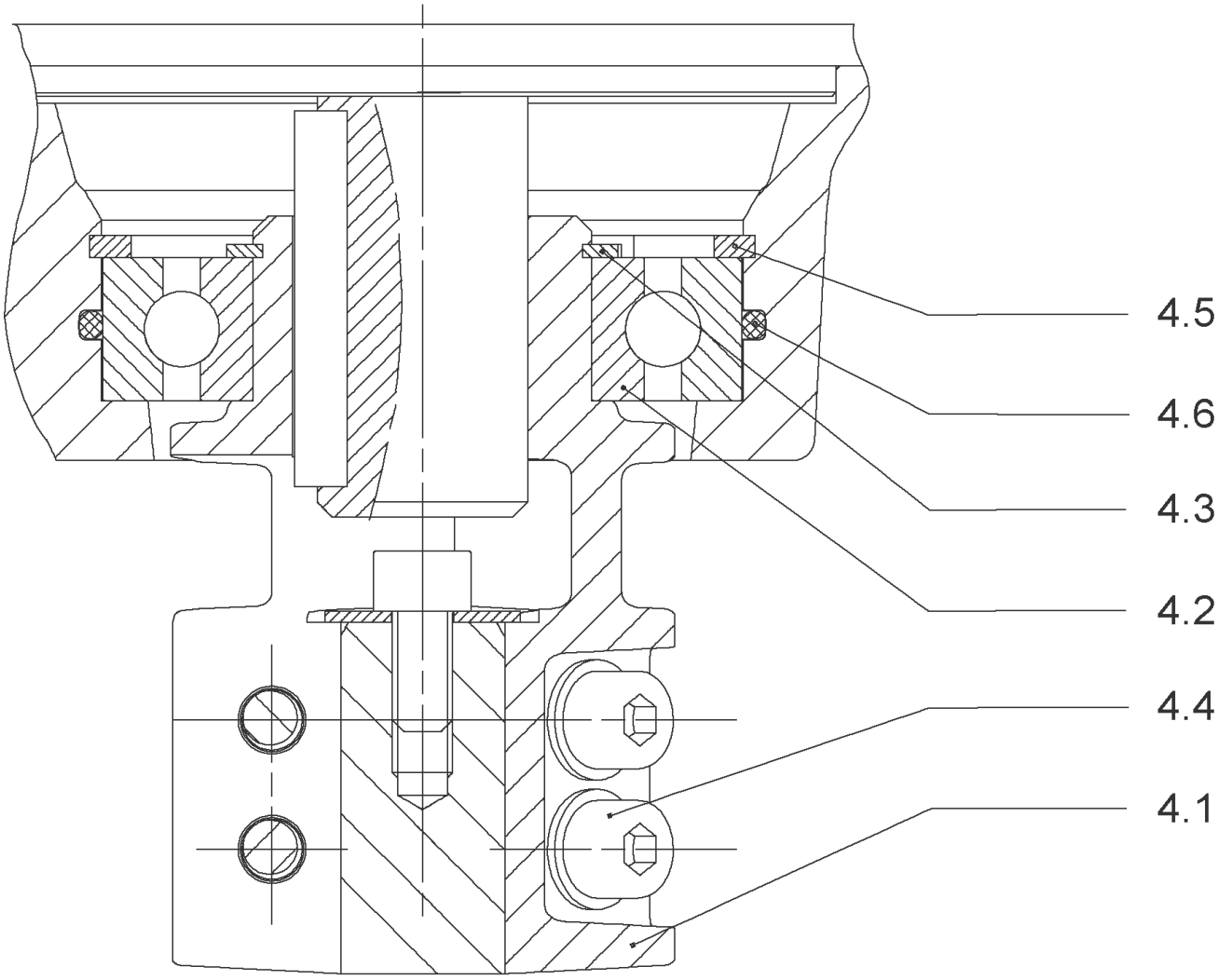
4.5
4.6
4.3
4.2
4.4
4.1

## COUPLING D.16xD.24 FT115 HELIX KIT (4159709)

| Item | Article no. | Description | Quantity |
|---|---|---|---|
| 4.1 | | COUPLING M+ Ø16XØ24 FT115 MACHINED | 1 |
| 4.2 | 2131023 | BALL BEARING 6207/ZZ-C3(HT)VP. | 1 |
| 4.3 | 4234254 | CIRCLIP-FOR-SHAFT-D35x1.5 VP. | 1 |
| 4.4 | 4157726 | SCREW KIT M8X30 (4 PIECES) | 1 |
| 4.5 | 4234251 | CIRCLIP-D72x2.5 VP. | 1 |
| 4.6 | 4234246 | O-RING 72X3 VP. | 1 |
| | | NOMEL CONTACT WASHER 8x16x1,4 STEEL ZC | 1 |

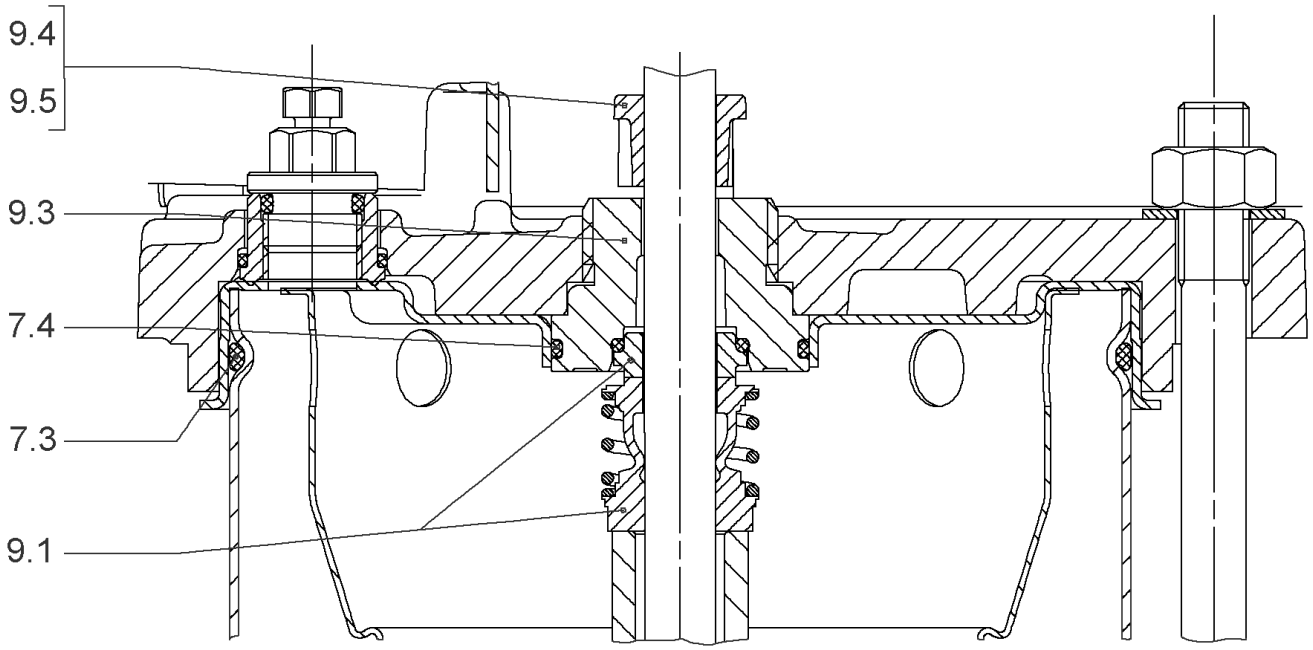
9.4
9.5
9.3
7.4
7.3
9.1

## SEAL-KIT-HELIX6-10-16 O/E KIT (4171327)

| Item | Article no. | Description | Quantity |
|---|---|---|---|
| 7.3 | 4176513 | O-RING FOR PUMP JACKET VP. | 1 |
| 7.4 | 2127603 | O-RING ID.37,6x2,4 EPDM VP. | 1 |
| 9.1 | 4177801 | MECH.SEAL HELIX6-10-16 O/E VP. | 1 |
| 9.3 | 4177798 | MACHINED RING HOLDER M+6" Ø16 304 VP. | 1 |
| 9.5 | 4177799 | MACHINED DRIVE RING Ø16 VP. | 1 |
| 9.4 | 4176520 | SCREW CH M5x5 A4-70 ( 3PIECES ) | 1 |

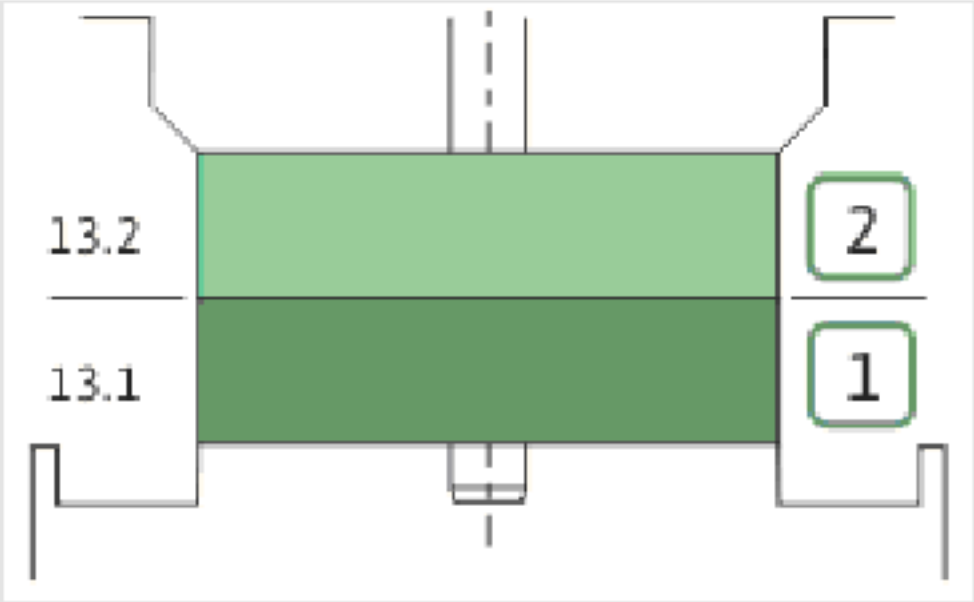
13.2
13.1
2
1

| Item | Article no. | Description | Quantity |
|---|---|---|---|
| 13.1 | 4159720 | STAGE HELIX 16 1.4301 KIT | 1 |
| | | > MACH.STG-CASING-WOGV-WNR-M+16-304 | 1 |
| | | > IMPELLER-M+16-304 | 1 |
| 13.2 | 4159714 | STAGE BEARING HELIX 16 1.4301 KIT | 1 |
| | | > MACH.BEARING-STG-CASING-WNR-M+16-304 | 1 |
| | | > IMPELLER-M+16-304 | 1 |
| | | > SLEEVE-SPACER-Ø19,35x30,665-304 | 1 |
| | | > SHAFT-SLEEVE-D16xD20x18-CW | 1 |

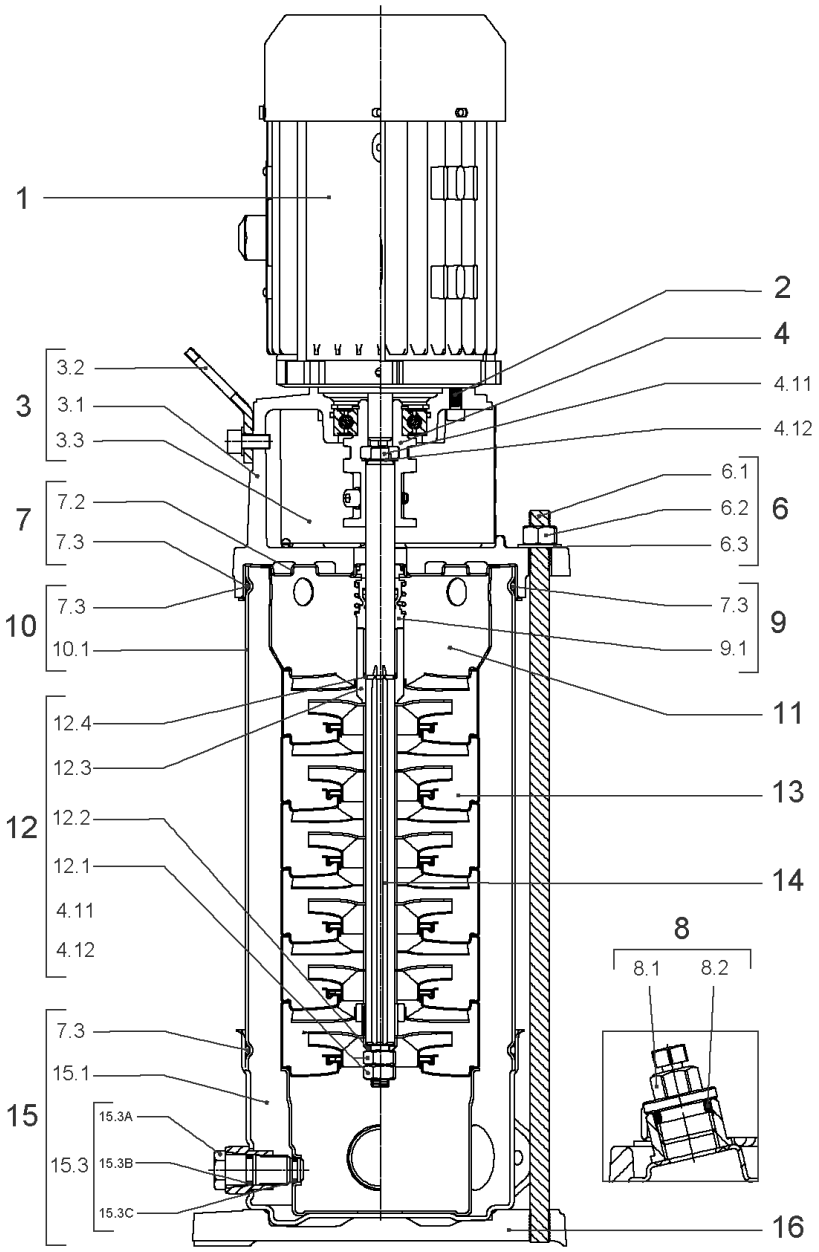
1
2
4
4.11
4.12
3
3.2
3.1
3.3
7
7.2
7.3
10
7.3
10.1
6
6.1
6.2
6.3
9
7.3
9.1
11
12
12.4
12.3
12.2
12.1
4.11
4.12
13
14
8
8.1
8.2
15
7.3
15.1
15.3
15.3A
15.3B
15.3C
16

## HELIX VE1602-1/16/E/S (4201557)

| Item | Article no. | Description | Quantity |
|---|---|---|---|
| 1 | | DRIVE HELIX-VE1602-IE4-WE KIT | 1 |
| Note: MOTOR BRAND WILO ELEC | | | |
| | | SPARE PARTS MOTOR:ON REQUEST | 1 |
| 2 | 4159707 | SCREW M8X30 (4 PIECES) | 1 |
| 3 | 4213784 | LANTERN FT115 HELIX KIT | 1 |
| 3.1 | | > LANT-MOT-VMI-ReDTC6"-FT115-MACHINED+CATA | 1 |
| 3.2 | 4184852 | > EYELET CPL.FT HELIX (2 PIECES) | 1 |
| 3.3 | 4213782 | > COUPLING PROTECTOR FT115/130 HELIX KIT | 1 |
| 4 | 4159709 | COUPLING D.16xD.24 FT115 HELIX KIT | 1 |
| 6 | 2018368 | STUD BOLT M12X289 KIT | 1 |
| 6.1 | | > TIE BOLT M12-289x18x30-1.4057 | 1 |
| 6.2 | 2094647 | > NUT M12 M12 ISO4032 VP. | 1 |
| 6.3 | 2123557 | > WASHER CS-12.4-24-1.6-NFE25 (4 PIECES) | 1 |
| 7 | 4214481 | STATIONARY RING HOLDER HELIX D27 ReDTC | 1 |
| 7.2 | 4214479 | > STATIONARY RING HOLDER HELIX D27 VP. | 1 |
| 7.3 | 4176513 | > O-RING FOR PUMP JACKET VP. | 1 |
| 8 | 4212724 | FILING/PURGING PLUG HELIX ReDTC KIT | 1 |
| 8.1 | | > FILLING PLUG MVI6"-304 | 1 |
| 8.2 | 4177800 | > O-RING EPDM PLUG HELIX VP. | 1 |
| 9 | 4214483 | MECH.SEAL HELIX6-10-16 O/E ReDTC KIT | 1 |
| 9.1 | 4177801 | > MECH.SEAL HELIX6-10-16 O/E VP. | 1 |
| 7.3 | 4176513 | > O-RING FOR PUMP JACKET VP. | 1 |
| 10 | 2127574 | HOUSING PIPE D.152x160 1.4301 KIT | 1 |
| 7.3 | 4176513 | > O-RING FOR PUMP JACKET VP. | 1 |
| 10.1 | | > HOUSING-PIPE Ø152-M+1601/02-304 | 1 |
| 11 | 2127588 | CENTERING STAGE-RETURN HELIX16 1.4301 VP | 1 |
| 12 | 4214520 | SHAFT EQUIPMENT HELIX V16 ReDTC KIT | 1 |
| 12.1 | | > NUT-H-M10-A4.70 | 1 |
| 12.2 | | > SERRATED LOCK WASHER M+16M3-316L | 1 |
| 12.3 | | > 1/2-SNAP-RING-16M3-316L | 1 |
| 12.4 | | > STOP-RUSH-1/2-D16xd2-M+316 | 1 |
| 4.11 | | > SCREW CHC-M6X14-8.8-ISO4762-GEOMET500A | 1 |
| 4.12 | | > WASHER D.24 L6U ZINK | 1 |
| 13 | | HYDRAULIC HELIX V 1602 1.4307 | 1 |

| Item | Article no. | Description | Quantity |
|---|---|---|---|
| 14 | 4214522 | SHAFT D.16X228 HELIX 1.4057 VP. | 1 |
| 15 | 4217899 | PUMP HOUSING HELIX DN50 PN16 1.4301 KIT | 1 |
| 7.3 | 4176513 | > O-RING FOR PUMP JACKET VP. | 1 |
| 15.1 | | > BLASTING PPE HOUSING V-PN16-DN50-304 | 1 |
| 15.2 | 4217895 | > COUNTER FLANGE-G2"-PN16-GJL KIT | 1 |
| 15.3 | 4171321 | > PRIMING/DRAIN PLUG EPDM HELIX KIT | 1 |
| 16 | 2127601 | BASEPLATE HELIX V16 VP. | 1 |

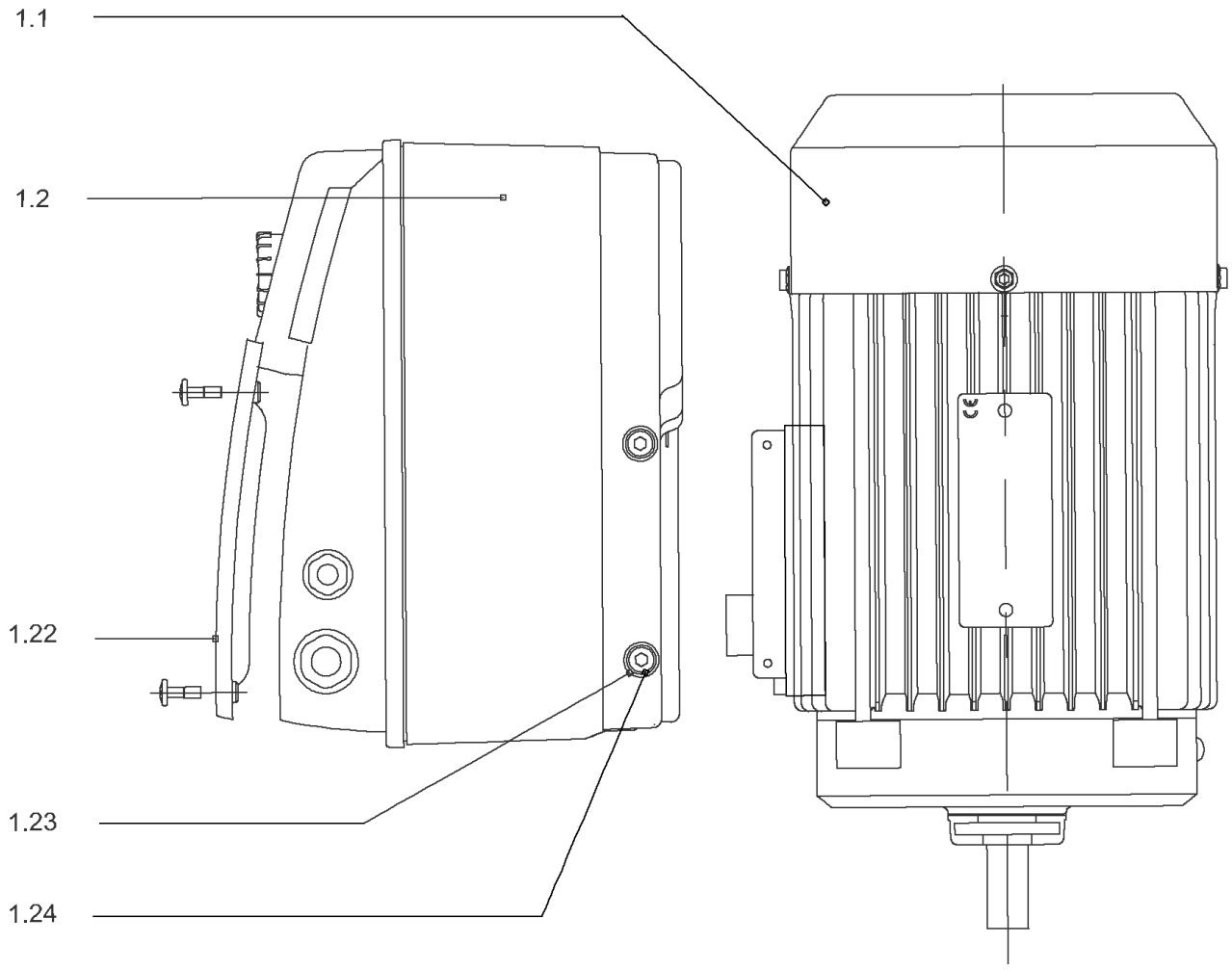
1.1
1.2
1.22
1.23
1.24

## DRIVE HELIX-VE1602-IE4-WE KIT

| Item | Article no. | Description | Quantity |
|---|---|---|---|
| 1.1 | 4207920 | MOTOR 2.2/2/90 3~ 380V 60HZ IE4 WE VP. | 1 |
| | | SPARE PARTS MOTOR:ON REQUEST | 1 |
| 1.2 | 4209593 | MODULE HELIX-VE1602-IE4-WE KIT | 1 |
| 1.22 | 2054227 | > MODULE COVER/GASKET TL3/4 KIT | 1 |
| 1.23 | 4215716 | > SCREW M5X16 DIN912 8.8 A2A (4pieces) VP. | 1 |
| 1.24 | 2057978 | > RONDELLE A5,3 DIN6797 FST ZN (4 PIECES) | 1 |

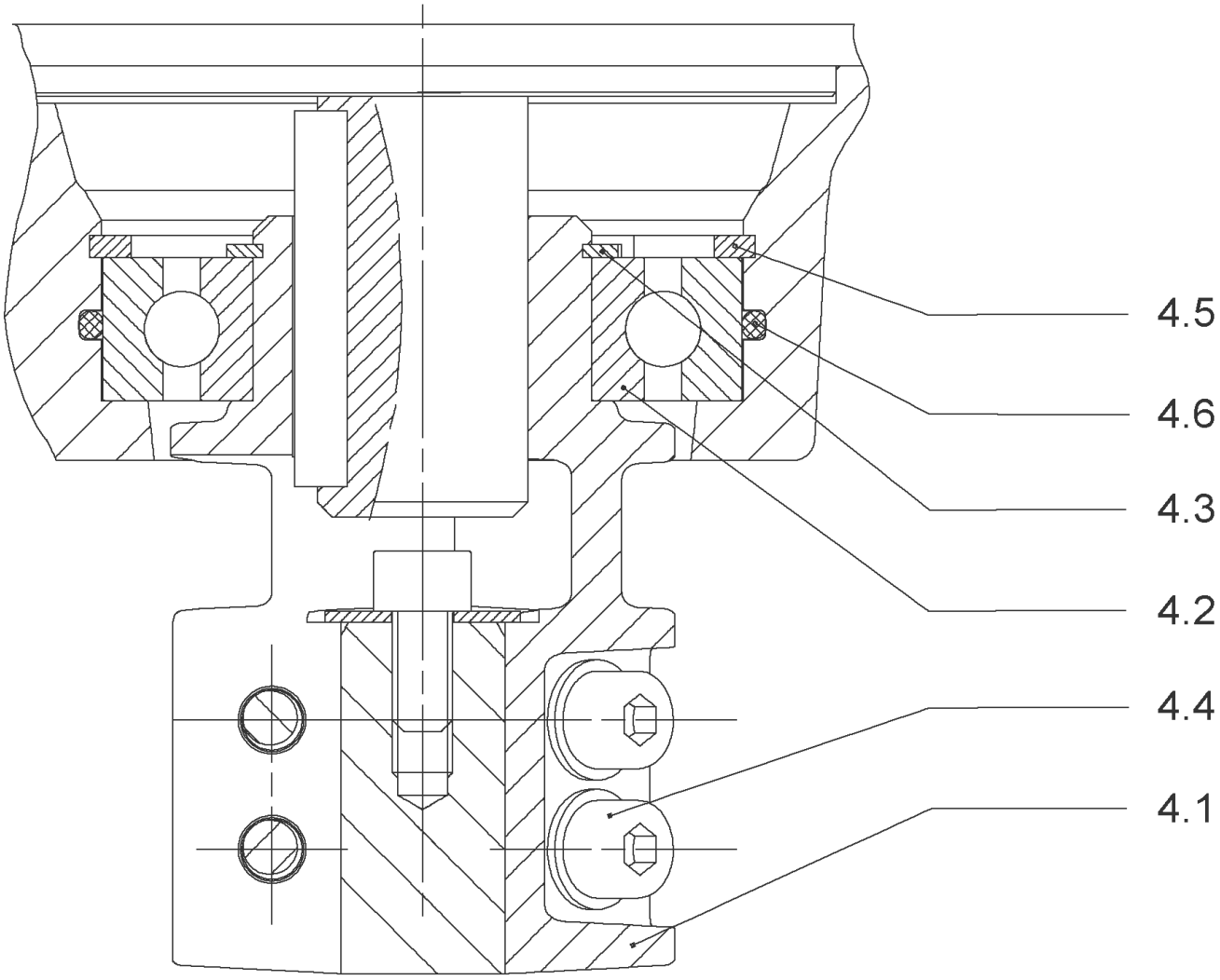
4.5
4.6
4.3
4.2
4.4
4.1

## COUPLING D.16xD.24 FT115 HELIX KIT (4159709)

| Item | Article no. | Description | Quantity |
|---|---|---|---|
| 4.1 | | COUPLING M+ Ø16XØ24 FT115 MACHINED | 1 |
| 4.2 | 2131023 | BALL BEARING 6207/ZZ-C3(HT)VP. | 1 |
| 4.3 | 4234254 | CIRCLIP-FOR-SHAFT-D35x1.5 VP. | 1 |
| 4.4 | 4157726 | SCREW KIT M8X30 (4 PIECES) | 1 |
| 4.5 | 4234251 | CIRCLIP-D72x2.5 VP. | 1 |
| 4.6 | 4234246 | O-RING 72X3 VP. | 1 |
| | | NOMEL CONTACT WASHER 8x16x1,4 STEEL ZC | 1 |

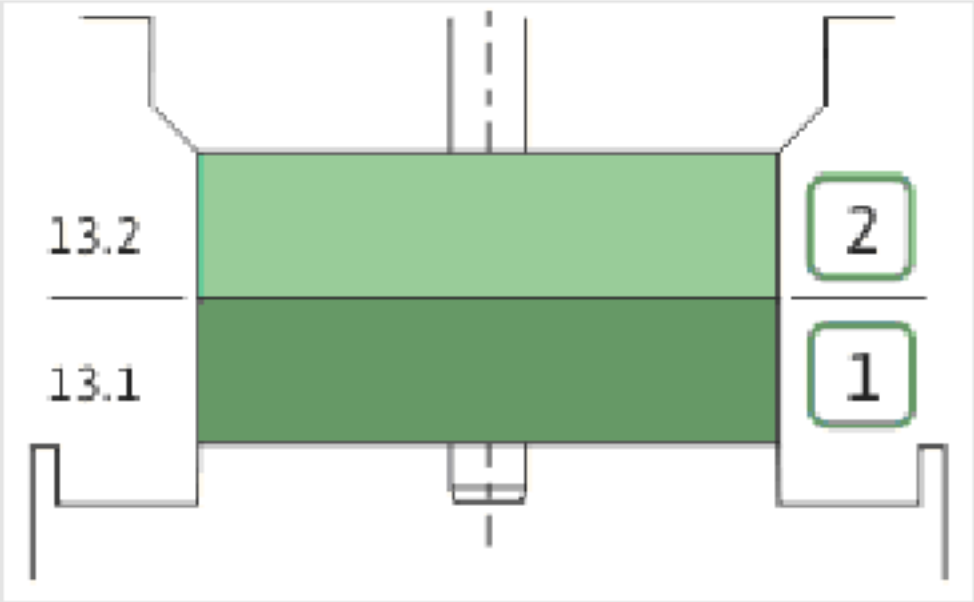
13.2
13.1
2
1

| Item | Article no. | Description | Quantity |
|---|---|---|---|
| 13.1 | 4159720 | STAGE HELIX 16 1.4301 KIT | 1 |
| | | > MACH.STG-CASING-WOGV-WNR-M+16-304 | 1 |
| | | > IMPELLER-M+16-304 | 1 |
| 13.2 | 4159714 | STAGE BEARING HELIX 16 1.4301 KIT | 1 |
| | | > MACH.BEARING-STG-CASING-WNR-M+16-304 | 1 |
| | | > IMPELLER-M+16-304 | 1 |
| | | > SLEEVE-SPACER-Ø19,35x30,665-304 | 1 |
| | | > SHAFT-SLEEVE-D16xD20x18-CW | 1 |

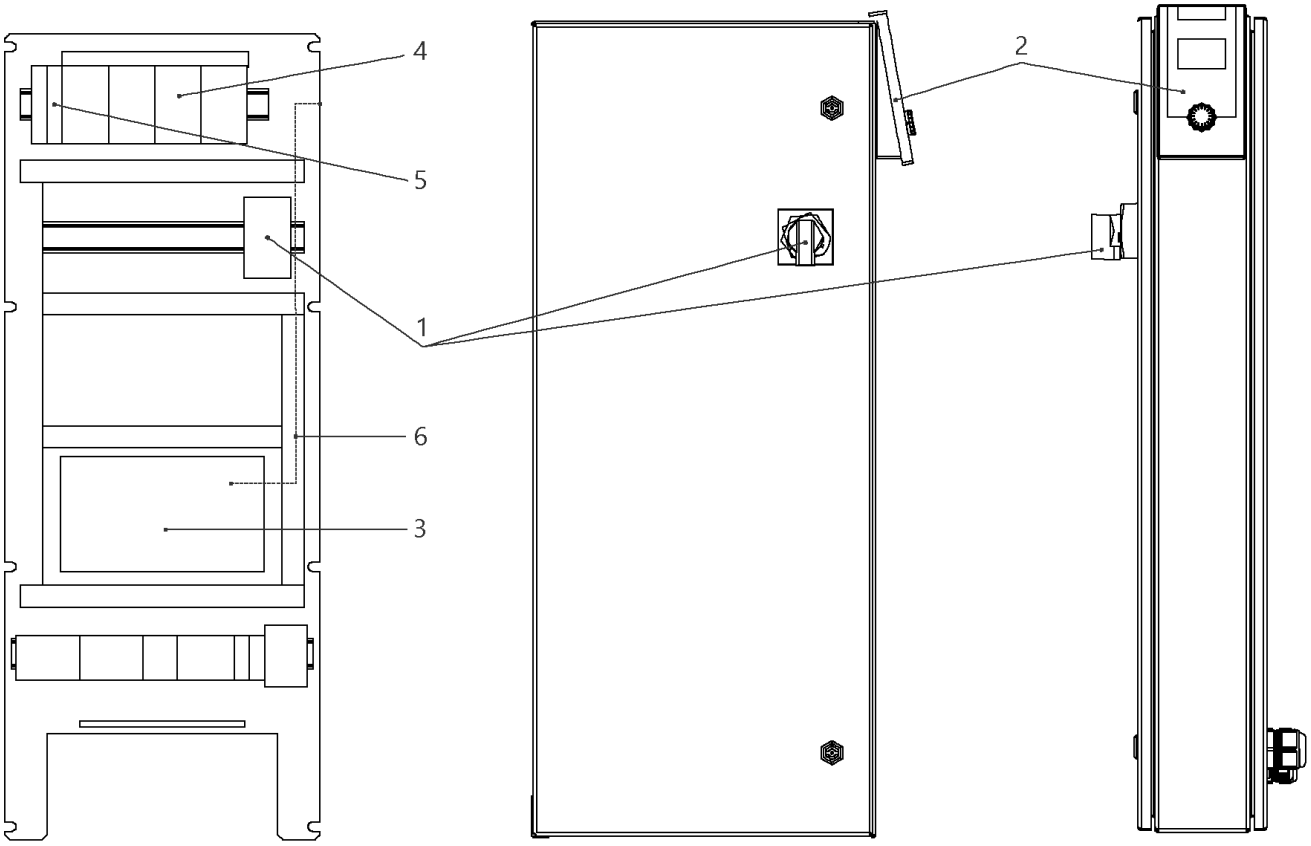
4
5
1
6
3
2

## W-CTRL-SCE-B-2x2,2KW-T4-FM-ND2

| Item | Article no. | Description | Quantity |
|---|---|---|---|
| 1 | 2104470 | MAIN SWITCH OT40F3 L250 KIT | 1 |
| 2 | 4184784 | CONTROL PANEL HMI SC KIT | 1 |
| 2 | 4185259 | ASSEMBLY DISPLAY SC PKG VP. | 1 |
| 3 | 4185257 | ASSEMBLY CPU SCe Booster VP. | 1 |
| 4 | 2051217 | AUTOM.CIRCUIT BREAKER S203 B16 TO7,5kW | 1 |
| 5 | 2046288 | CIRCUIT BREAKER S201 B16 | 1 |
| 6 | 4194956 | PATCH CABLE RJ45 CAT6 1,0M BLUE SC-PANEL | 1 |

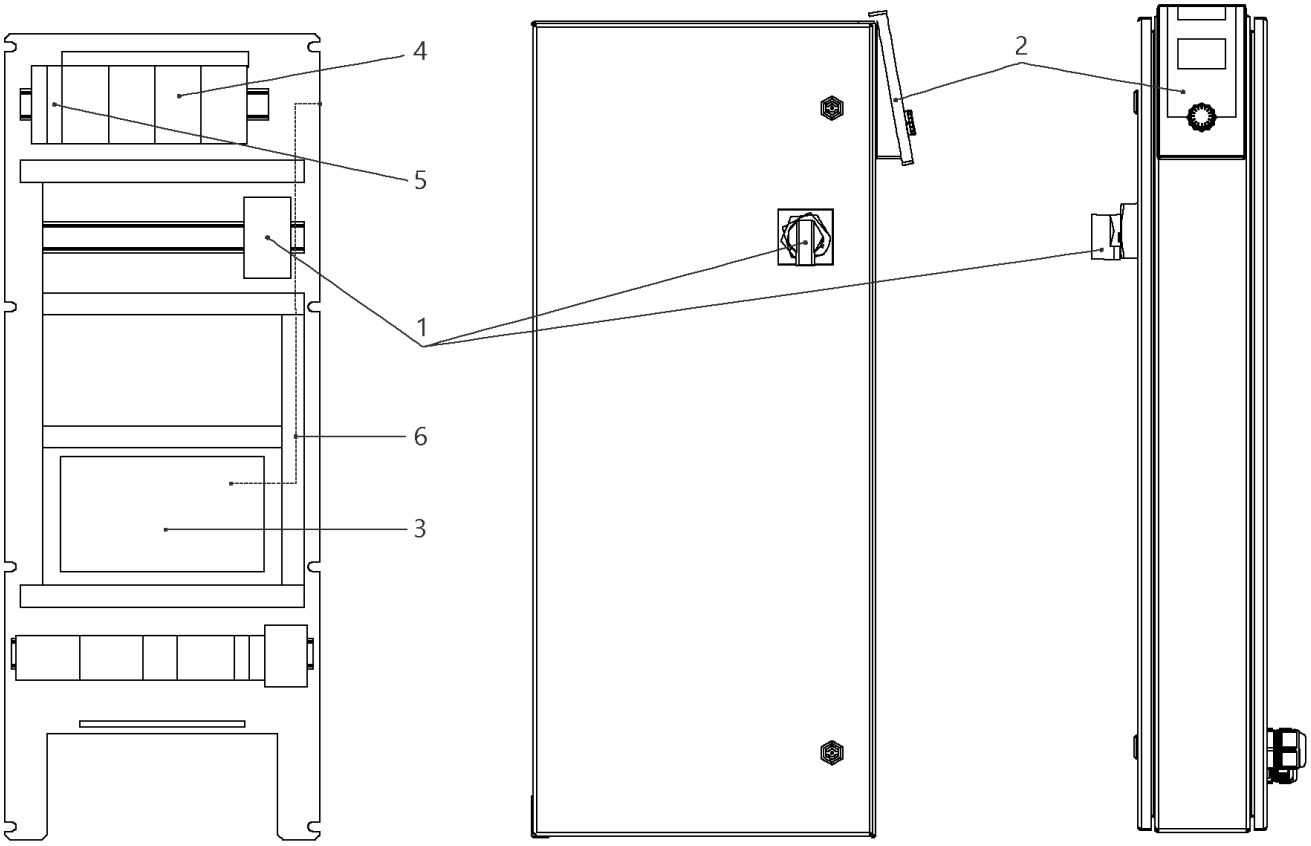
4
5
1
6
3
2

## W-CTRL-SCE-B-2x10A-T34-FM-ND2-AVC-PKG (2541901)

| Item | Article no. | Description | Quantity |
|---|---|---|---|
| 1 | 2104470 | MAIN SWITCH OT40F3 L250 KIT | 1 |
| 2 | 4184784 | CONTROL PANEL HMI SC KIT | 1 |
| 2 | 4185259 | ASSEMBLY DISPLAY SC PKG VP. | 1 |
| Note: DISPLAY ALONE / PLATINE SEULE | | | |
| 3 | 4185257 | ASSEMBLY CPU SCe Booster VP. | 1 |
| 4 | 2119861 | AUTOMATIC CIRCUIT BREAKER S203 B13 3POL. | 1 |
| 5 | 2046288 | CIRCUIT BREAKER S201 B16 | 1 |
| 6 | 4194956 | PATCH CABLE RJ45 CAT6 1,0M BLUE SC-PANEL | 1 |

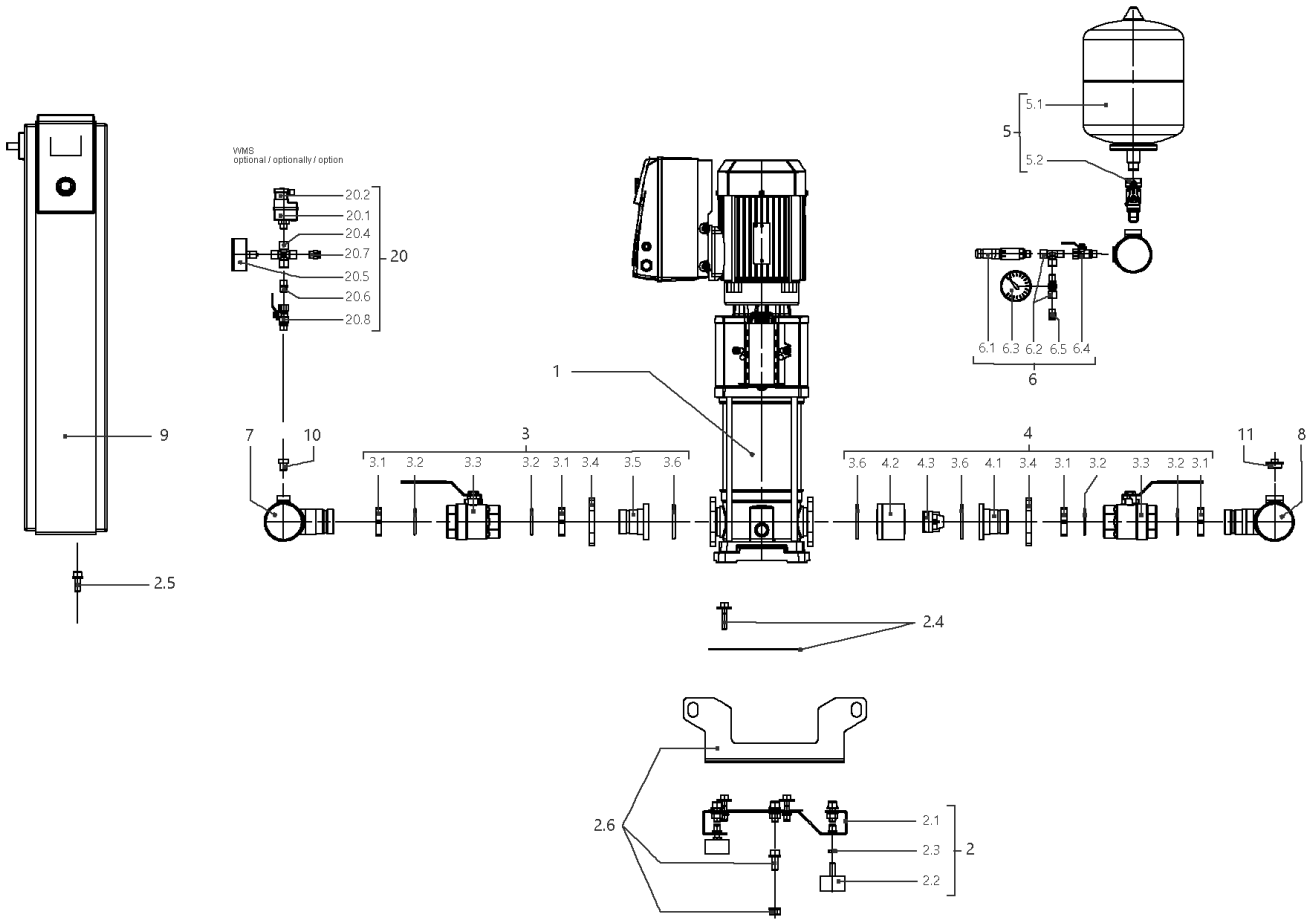
VVMS
optional / optionally / option
20.2
20.1
20.4
20.7
20.5
20.6
20.8
20
5.1
5
5.2
6.1 6.3 6.2 6.5 6.4
6
1
9
7
10
3
3.1 3.2 3.3 3.2 3.1 3.4 3.5 3.6
4
3.6 4.2 4.3 3.6 4.1 3.4 3.1 3.2 3.3 3.2 3.1
11
8
2.5
2.4
2.6
2.1
2.3
2.2
2

## SiBoost Smart 2HELIX VE1603/3kW (2537337)

| Item | Article no. | Description | Quantity |
|---|---|---|---|
| 1 | | HELIX VE1603-3.0-1/16/E/S | 1 |
| Note: TO / BIS / JUSQU'AU 30/04/2016 | | | |
| 1 | 4201559 | HELIX VE1603-3.0-1/16/E/S | 1 |
| Note: FROM / AB / À PARTIR DU 01/05/2016 | | | |
| 2 | 4197125 | BASE PLATE DE2 850x420 KIT | 1 |
| 2.1 | | > BASEPLATE_2x4/6/10/16V_E300_BOX_150 | 1 |
| 2.2 | 2028654 | > VIBRATION DAMPER D.50X30 M10X28 | 1 |
| 2.3 | 2028281 | > NUT M10 DIN936 (ISO4035) 17H VZ | 1 |
| 2.4 | 4197083 | > HOLDER PUMP Helix 10/16 KIT | 1 |
| 2.5 | 4197084 | > HOLDER SWITCHBOX WILO Smart Control KIT | 1 |
| 2.6 | 4197117 | > LIFTING Siboost HELIX SC KIT | 1 |
| 3 | 4197072 | SUCTION SIDE Siboost Helix10/16 KIT | 1 |
| 3.1 | 2032623 | > NUT G1 1/2"SW55 MS | 1 |
| 3.2 | 2032616 | > O-RING ID.44X3,53N DIN3771 E7502 | 1 |
| 3.2 | 2534877 | > BALL TAP KDW40-H G11/2I-I-DN40 DVGW | 1 |
| 3.4 | 2032626 | > OVAL FLANGE D52-LK100 ST-VZ | 1 |
| 3.5 | 2032627 | > UNION INSERT DN40 LAPPED FLANGE | 1 |
| 3.6 | 2032628 | > O-RING ID.56,52X5,33N DIN3771 E7502 | 1 |
| 4 | 4197829 | DELIVERY SIDE Siboost Helix V16 KIT | 1 |
| 3.1 | 2032623 | > NUT G1 1/2"SW55 MS | 1 |
| 3.2 | 2032616 | > O-RING ID.44X3,53N DIN3771 E7502 | 1 |
| 3.3 | 2534877 | > BALL TAP KDW40-H G11/2I-I-DN40 DVGW | 1 |
| 3.4 | 2032626 | > OVAL FLANGE D52-LK100 ST-VZ | 1 |
| 4.1 | 2054274 | > UNION INSERT DN40 LAPPED FLANGE(W.COLLAR | 1 |
| 4.2 | 2054270 | > HOUSING RFV(RV-IN) DN50 MS VP. | 1 |
| 4.3 | 2028284 | > NON-RETURN DEVICE UNIT NV50/DN50 VP. | 1 |
| 3.6 | 2032628 | > O-RING ID.56,52X5,33N DIN3771 E7502 | 1 |
| 5 | 2032642 | DIAPHREM TANK 8L/PN16 DIN4807/T5 KIT | 1 |
| 5.1 | 2045914 | > DIAPHREM TANK 8L TYP-DD 16BAR | 1 |
| 5.2 | 2027853 | > FLOW FITTING G3/4 FOR DIAPHRAGM VES. | 1 |
| 6 | 4197076 | PRESSURE SENSOR/ GAUGE 0-16BAR KIT | 1 |
| 6.1 | 2085909 | > PRESS.SENSOR 1/4" 0-16BAR 4-20MA VP. | 1 |
| 6.2 | 4197077 | > T-PIECE 1/4" VP. | 1 |
| 6.3 | 2028692 | > PRESSURE GAUGE NG63-PN16-G1/4 | 1 |

| Item | Article no. | Description | Quantity |
|---|---|---|---|
| 6.4 | 2028291 | > BALL TAP R1/4" PN42 GIACOMINI R254DL | 1 |
| 6.5 | 2028691 | > BLOWGUN 1/4" MS 30BAR VP. | 1 |
| 7 | 4197830 | PIPE DE2 3''-2x11/2"+1x1/4x600 VP. | 1 |
| 8 | 4197831 | PIPE DE2 3''-2x11/2"+1x1/4+1x3/4x600 VP. | 1 |
| 9 | | W-CTRL-SCE-B-2x4,0KW-T4-FM-ND2 | 1 |
| Note: TO / BIS / JUSQU'AU 18/05/2014 | | | |
| 9 | 2541905 | W-CTRL-SCE-B-2x13A-T34-FM-ND2-AVC-PKG | 1 |
| Note: FROM / AB / À PARTIR DU 19/05/2014 | | | |
| 10 | 4197079 | PLUG G1/4"x10 AISI304 KIT | 1 |
| 11 | 2032654 | PLUG R3/4" MS VIEGA 1751 | 1 |
| 20 | 2521150 | ASSEMBLY WMS. DE-EB. +VP | 1 |
| 20.1 | 2028652 | > PRESSURE SWITCH PS3-ASR 1/(1,3) VP. | 1 |
| 20.2 | 2130983 | > PLUG PS3-415 WITH KABEL 1,5M 2NO VP. | 1 |
| 20.4 | 2028290 | > CROSSPIECE R1/4" MS-NICKEL | 1 |
| 20.5 | 2028687 | > PRESSURE GAUGE NG63 R1/4" HI.0-6BAR | 1 |
| 20.6 | 2054268 | > DUAL NIPPLE G1/4" x G1/4" MS VP. | 1 |
| 20.7 | 2028691 | > BLOWGUN 1/4" MS 30BAR VP. | 1 |
| 20.8 | 2028291 | > BALL TAP R1/4" PN42 GIACOMINI R254DL | 1 |

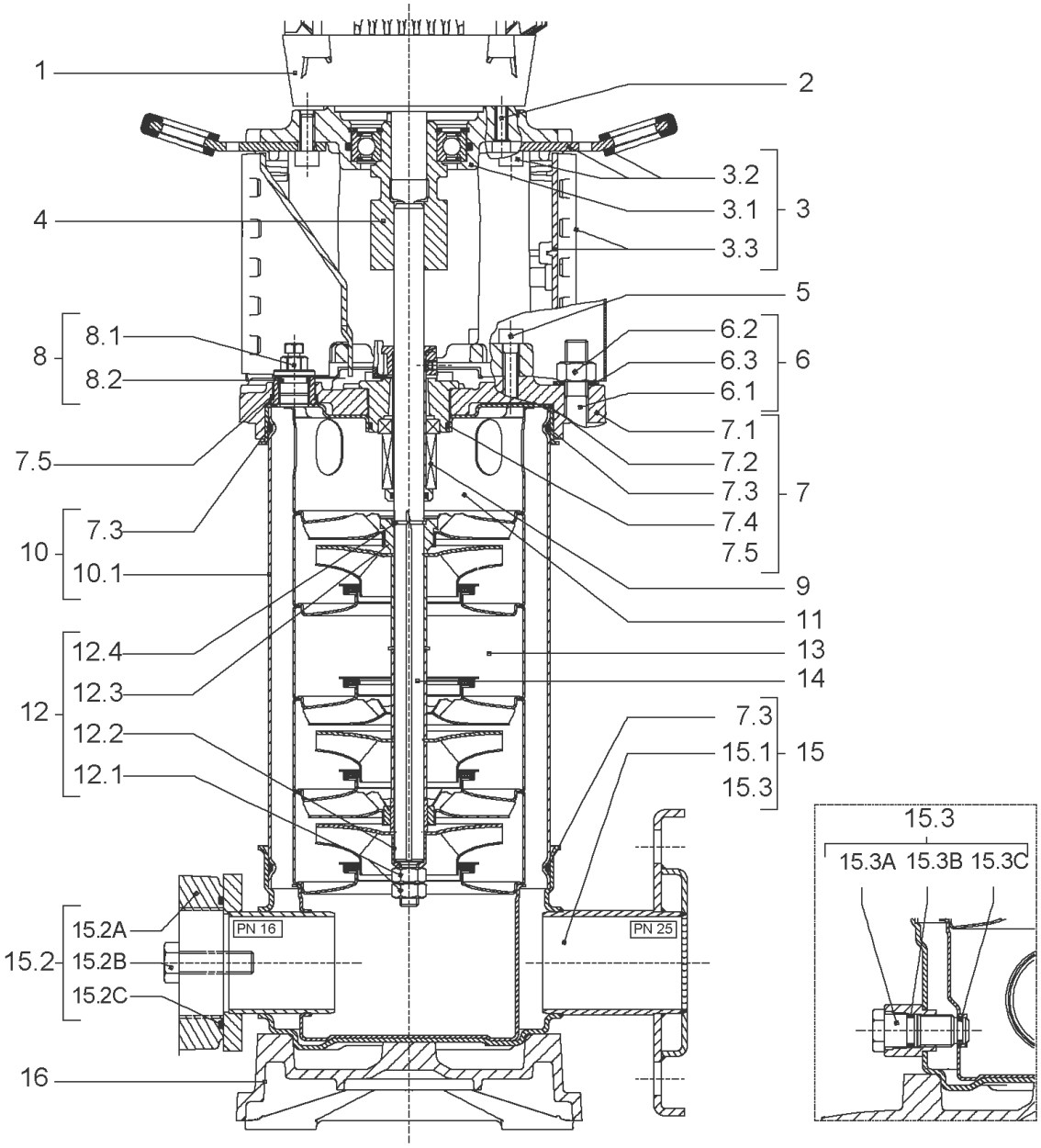
1
2
3.2
3.1
3
3.3
4
5
8.1
8
8.2
6.2
6.3
6
6.1
7.1
7.2
7.5
7.3
7
7.4
7.3
10
7.5
10.1
9
11
12.4
13
12.3
14
12
12.2
7.3
15.1
15
12.1
15.3
15.3
15.3A 15.3B 15.3C
15.2A
PN 16
PN 25
15.2
15.2B
15.2C
16

| Item | Article no. | Description | Quantity |
|---|---|---|---|
| 1 | | DRIVE HELIXVE1603-3.0-IE2-WE KIT | 1 |
| Note: MOTOR BRAND WILO ELEC | | | |
| 1 | | DRIVE HELIX-VE1603-3T-IE4-WE-KIT | 1 |
| Note: MOTOR BRAND WILO ELEC | | | |
| 2 | 4159703 | SCREW M8X40 (4 PIECES) | 1 |
| 3 | 4172789 | LANTERN FT130 HELIX V10 KIT | 1 |
| 3.1 | | > M+5_6_LANTERN_ONE-PIECE_FT130_CATA | 1 |
| 3.2 | 2127604 | > EYELET CPL.FT HELIX(2 PIECES) | 1 |
| 3.3 | 4159692 | > COUPLING PROTECTOR FT HELIX KIT | 1 |
| 4 | 4159710 | COUPLING D.16XD.28 FT130 HELIX KIT | 1 |
| 5 | 4159707 | SCREW M8X30 (4 PIECES) | 1 |
| 6 | 4177817 | STUD BOLT M12X341 KIT | 1 |
| 6.1 | | > TIE BOLT M12-341x18x30-1.4057 | 1 |
| 6.2 | 2094647 | > NUT M12 M12 ISO4032 VP. | 1 |
| 6.3 | 2123557 | > WASHER CS-12.4-24-1.6-NFE25 (4 PIECES) | 1 |
| 7 | 4210143 | STATIONARY RING HOLDER HELIX 6" EPDM | 1 |
| 7.2 | 2127607 | > STATIONARY RING HOLDER 6" HELIX 1.4301 V | 1 |
| 7.3 | 4176513 | > O-RING FOR PUMP JACKET VP. | 1 |
| 7.4 | 2127603 | > O-RING ID.37,6x2,4 EPDM VP. | 1 |
| 7.5 | 2127602 | > O-RING ID.21,35x2 EPDM VP. | 1 |
| 8 | 4159686 | FILING/PURGING PLUG HELIX EPDM KIT | 1 |
| 9 | 4171327 | SEAL-KIT-HELIX6-10-16 O/E KIT | 1 |
| 10 | 2127575 | HOUSING PIPE D.152x210 1.4301 KIT | 1 |
| 11 | 2127588 | CENTERING STAGE-RETURN HELIX16 1.4301 VP | 1 |
| 12 | 4209329 | SHAFT EQUIPMENT HELIX V16 KIT | 1 |
| 12.1 | | > NUT-H-M10-A4.70 | 1 |
| 12.2 | | > SERRATED LOCK WASHER M+16M3-316L | 1 |
| 12.3 | | > IMPELLER STOP RING L35,9-304 | 1 |
| 12.4 | | > STOP-RUSH-1/2-D16xd2-M+316 | 1 |
| 13 | | HYDRAULIC HELIX V 1603 1.4307 | 1 |
| 14 | 2127564 | SHAFT D.16X330 1.4301 VP. | 1 |
| 15 | 4217899 | PUMP HOUSING HELIX DN50 PN16 1.4301 KIT | 1 |
| 7.3 | 4176513 | > O-RING FOR PUMP JACKET VP. | 1 |
| 15.1 | | > BLASTING PPE HOUSING V-PN16-DN50-304 | 1 |

| Item | Article no. | Description | Quantity |
|---|---|---|---|
| 15.2 | 4217895 | > COUNTER FLANGE-G2"-PN16-GJL KIT | 1 |
| 15.3 | 4171321 | > PRIMING/DRAIN PLUG EPDM HELIX KIT | 1 |
| 16 | 2127601 | BASEPLATE HELIX V16 VP. | 1 |

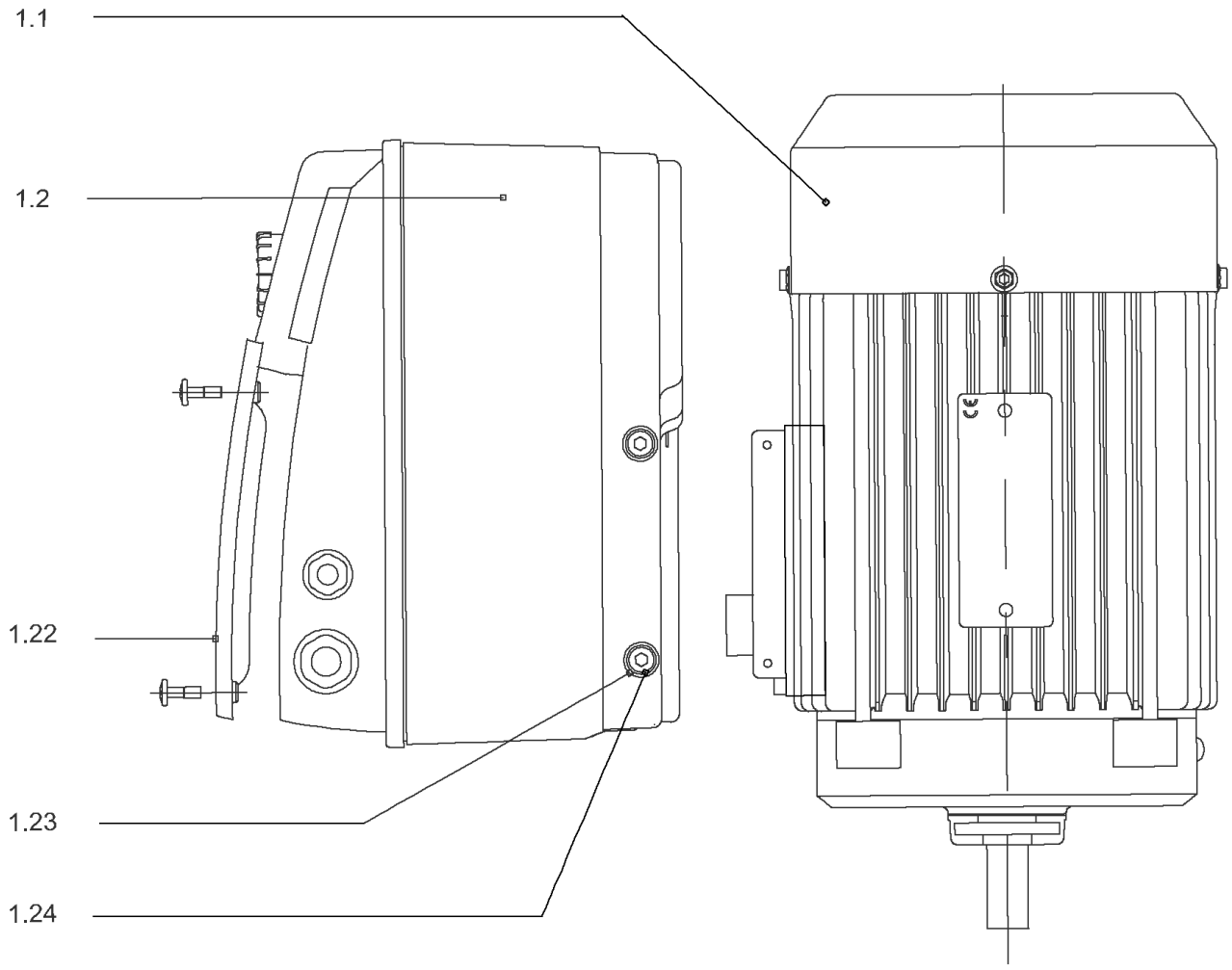
1.1
1.2
1.22
1.23
1.24

## DRIVE HELIXVE1603-3.0-IE2-WE KIT

| Item | Article no. | Description | Quantity |
|---|---|---|---|
| 1.1 | | M3-T638P55V18H-100F13-SU-N28-WE-IE2 VP. | 1 |
| Note: no longer available /nicht mehrlieferbarn'est plus disponible | | | |
| | | SPARE PARTS MOTOR:ON REQUEST | 1 |
| 1.2 | 4186405 | MODULE HELIX-VE1603-3.0-IE2-WE KIT | 1 |
| 1.22 | 2054227 | > MODULE COVER/GASKET TL3/4 KIT | 1 |
| 1.23 | 4215716 | > SCREW M5X16 DIN912 8.8 A2A (4pieces) VP. | 1 |
| 1.24 | 2057978 | > RONDELLE A5,3 DIN6797 FST ZN (4 PIECES) | 1 |

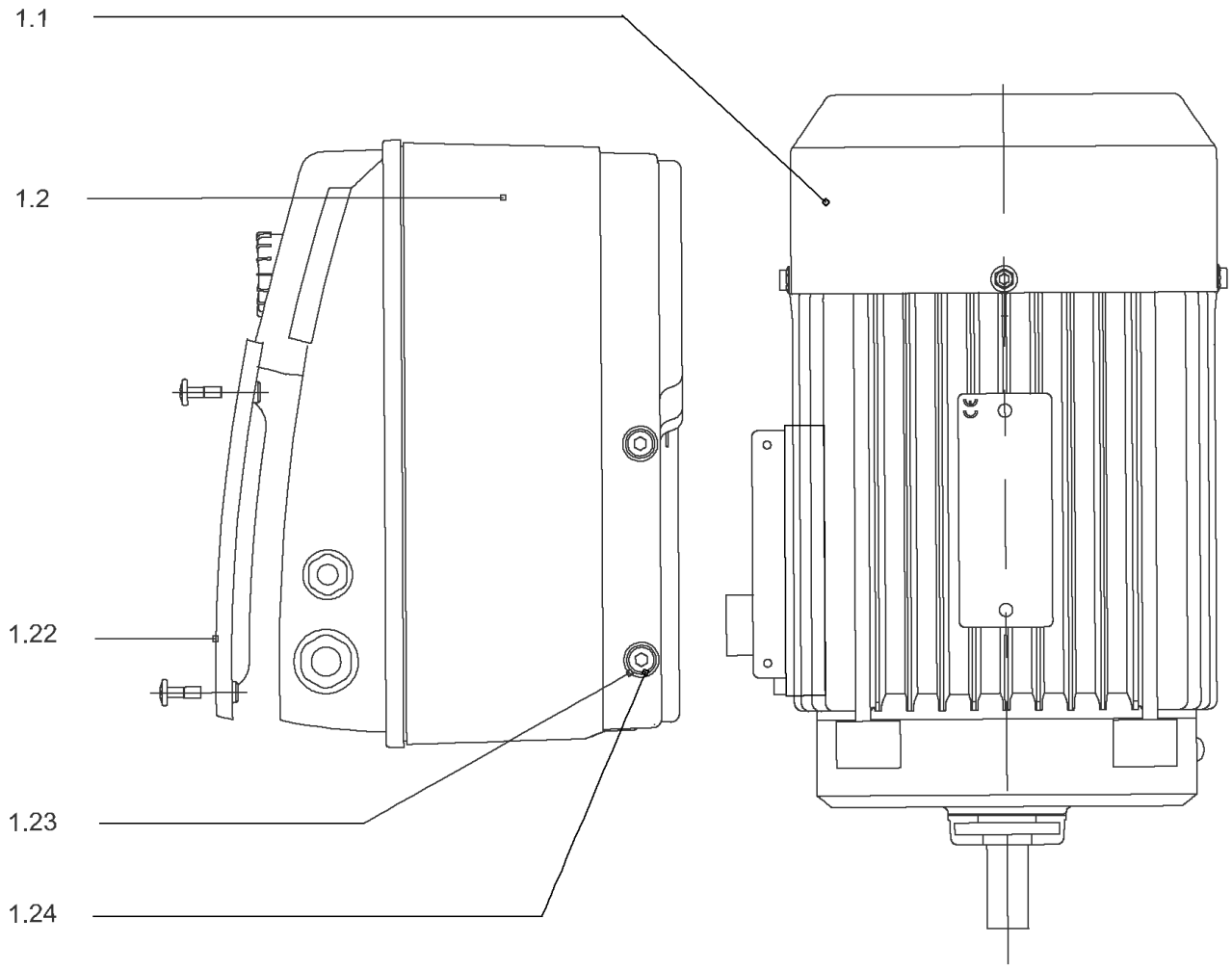
1.1
1.2
1.22
1.23
1.24

## DRIVE HELIX-VE1603-3T-IE4-WE-KIT

| Item | Article no. | Description | Quantity |
|---|---|---|---|
| 1.1 | 4207922 | MOTOR 3/2/100 3~ 380V 60HZ IE4 WE VP. | 1 |
| | | SPARE PARTS MOTOR:ON REQUEST | 1 |
| 1.2 | 4209340 | MODULE HELIX-VE1603-3.0-IE4-WE KIT | 1 |
| 1.22 | 2054227 | > MODULE COVER/GASKET TL3/4 KIT | 1 |
| 1.23 | 4215716 | > SCREW M5X16 DIN912 8.8 A2A (4pieces) VP. | 1 |
| 1.24 | 2057978 | > RONDELLE A5,3 DIN6797 FST ZN (4 PIECES) | 1 |

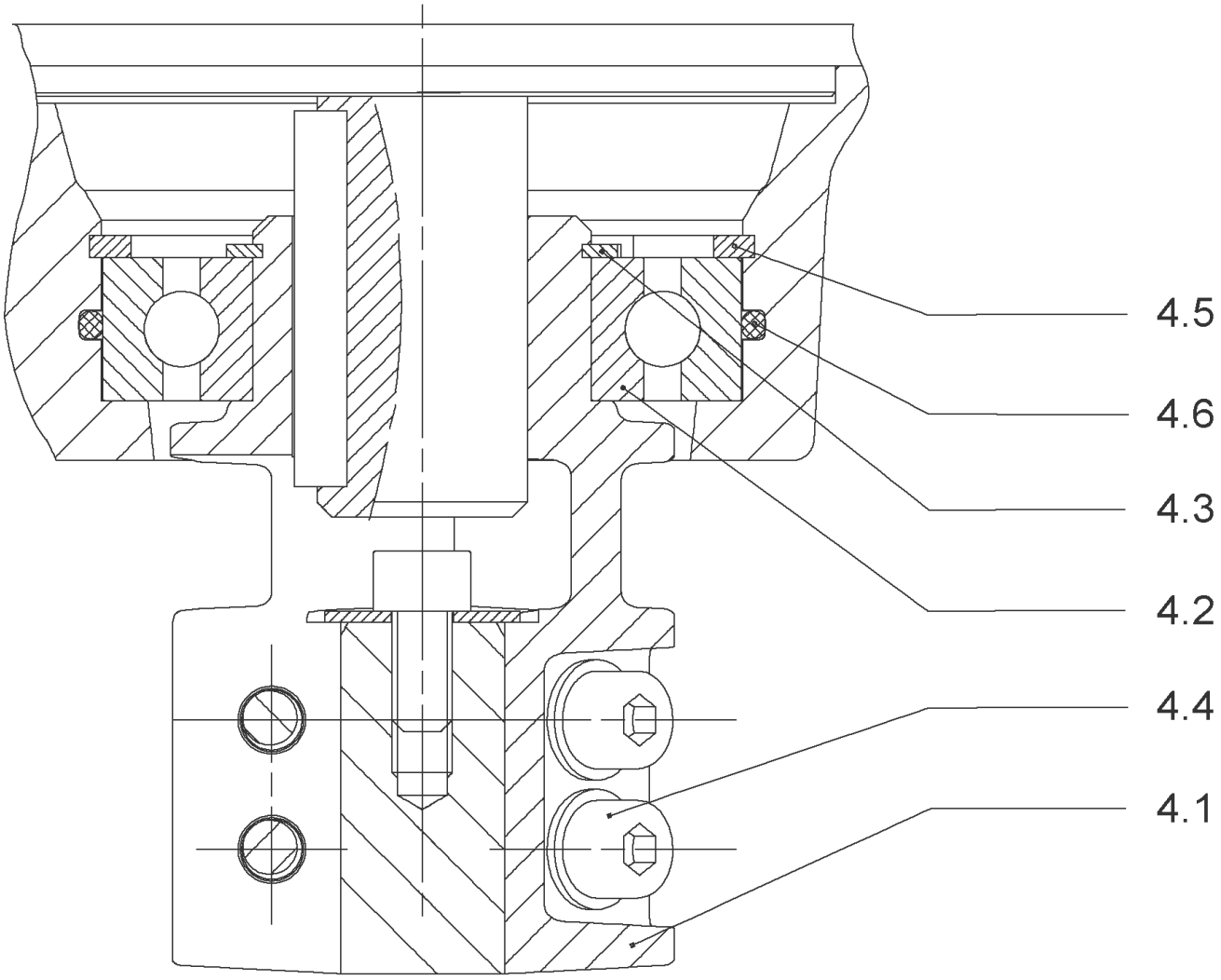
4.5
4.6
4.3
4.2
4.4
4.1

## COUPLING D.16XD.28 FT130 HELIX KIT (4159710)

| Item | Article no. | Description | Quantity |
|---|---|---|---|
| 4.1 | | COUPLING M+ Ø16XØ28 FT130 MACHINED | 1 |
| 4.2 | 2131022 | BALL BEARING 6209/ZZ-C3(HT)VP. | 1 |
| 4.3 | 4233930 | CIRCLIP-FOR-BORES-D45x1,75 VP. | 1 |
| 4.4 | 4157726 | SCREW KIT M8X30 (4 PIECES) | 1 |
| 4.5 | 4234252 | CIRCLIPS 85X3 VP. | 1 |
| 4.6 | 4234243 | O-RING 85X3 VP. | 1 |
| | | NOMEL CONTACT WASHER 8x16x1,4 STEEL ZC | 1 |

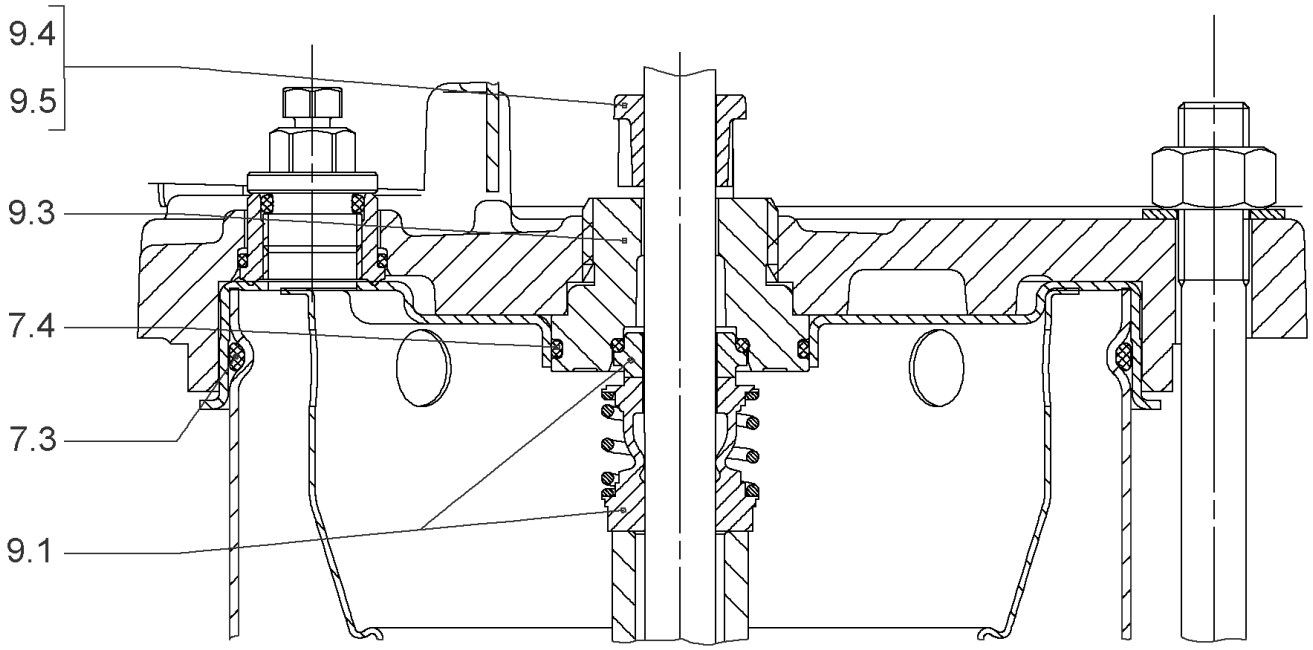
9.4
9.5
9.3
7.4
7.3
9.1

## SEAL-KIT-HELIX6-10-16 O/E KIT (4171327)

| Item | Article no. | Description | Quantity |
|---|---|---|---|
| 7.3 | 4176513 | O-RING FOR PUMP JACKET VP. | 1 |
| 7.4 | 2127603 | O-RING ID.37,6x2,4 EPDM VP. | 1 |
| 9.1 | 4177801 | MECH.SEAL HELIX6-10-16 O/E VP. | 1 |
| 9.3 | 4177798 | MACHINED RING HOLDER M+6" Ø16 304 VP. | 1 |
| 9.5 | 4177799 | MACHINED DRIVE RING Ø16 VP. | 1 |
| 9.4 | 4176520 | SCREW CH M5x5 A4-70 ( 3PIECES ) | 1 |

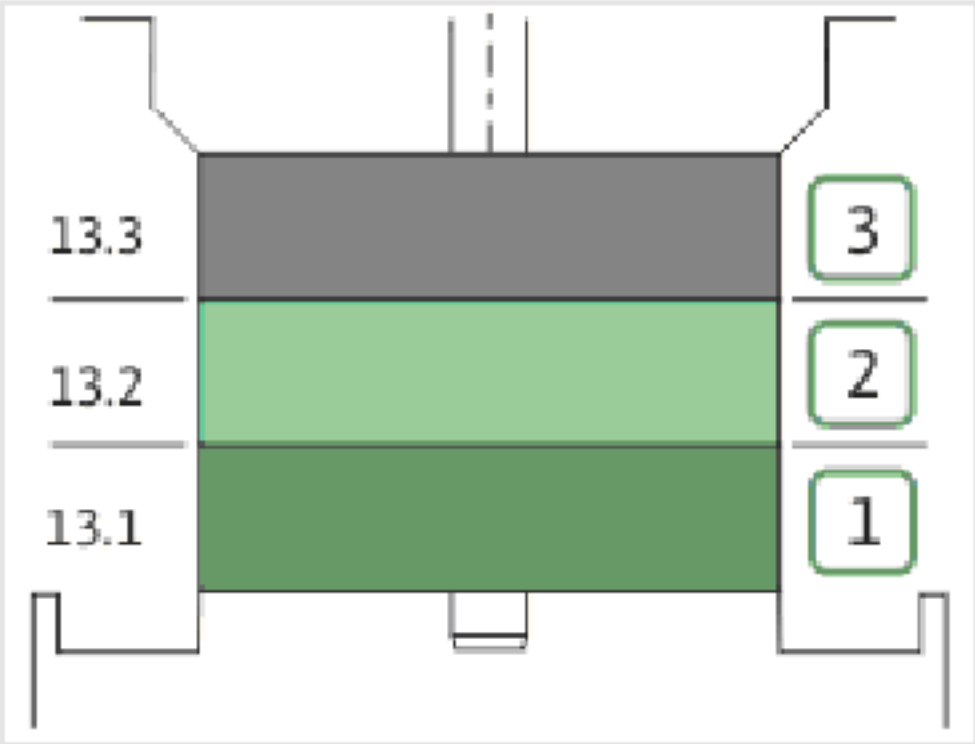
13.3
13.2
13.1
3
2
1

| Item | Article no. | Description | Quantity |
|---|---|---|---|
| 13.1 | 4159720 | STAGE HELIX 16 1.4301 KIT | 1 |
| | | > MACH.STG-CASING-WOGV-WNR-M+16-304 | 1 |
| | | > IMPELLER-M+16-304 | 1 |
| 13.2 | 4159714 | STAGE BEARING HELIX 16 1.4301 KIT | 1 |
| | | > MACH.BEARING-STG-CASING-WNR-M+16-304 | 1 |
| | | > IMPELLER-M+16-304 | 1 |
| | | > SLEEVE-SPACER-Ø19,35x30,665-304 | 1 |
| | | > SHAFT-SLEEVE-D16xD20x18-CW | 1 |
| 13.3 | 4159715 | INTERMEDIATE STAGE HELIX 16 1.4301 KIT | 1 |
| | | > CORPS-ETG-STD-ACR-AJR-USIN.M+16-304 | 1 |
| | | > IMPELLER-M+16-304 | 1 |
| | | > SPACER Ø16X19.4-L48.6-304 | 1 |

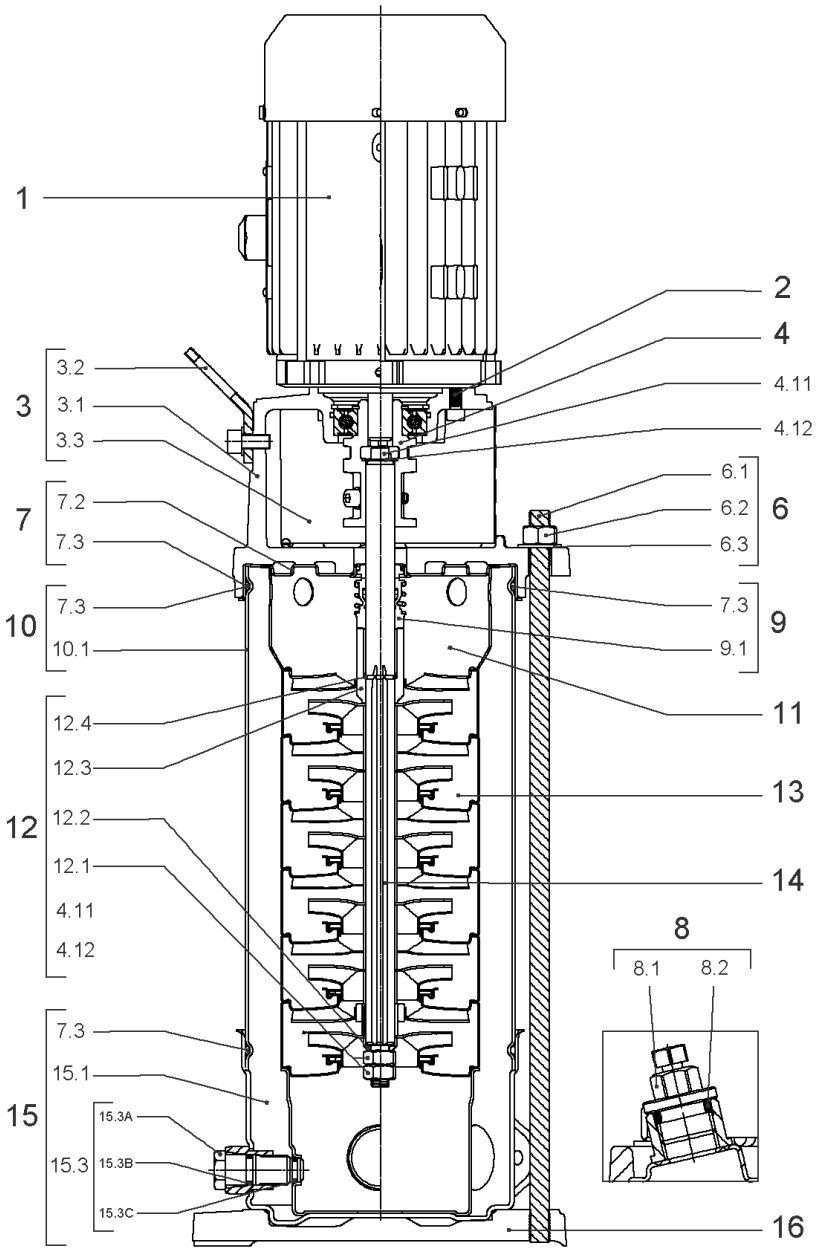
1
2
4
4.11
4.12
3
3.2
3.1
3.3
7
7.2
7.3
10
7.3
10.1
12
12.4
12.3
12.2
12.1
4.11
4.12
15
7.3
15.1
15.3
15.3A
15.3B
15.3C
6
6.1
6.2
6.3
9
7.3
9.1
11
13
14
8
8.1
8.2
16

## HELIX VE1603-3.0-1/16/E/S (4201559)

| Item | Article no. | Description | Quantity |
|---|---|---|---|
| 1 | | DRIVE HELIX-VE1603-3T-IE4-WE-KIT | 1 |
| Note: MOTOR BRAND WILO ELEC | | | |
| | | SPARE PARTS MOTOR:ON REQUEST | 1 |
| 2 | 4159707 | SCREW M8X30 (4 PIECES) | 1 |
| 3 | 4214473 | LANTERN FT130 HELIX KIT | 1 |
| 3.1 | | > LANT-MOT-VMI-ReDTC6"-FT130-MACHINED+CATA | 1 |
| 3.2 | 4184852 | > EYELET CPL.FT HELIX (2 PIECES) | 1 |
| 3.3 | 4213782 | > COUPLING PROTECTOR FT115/130 HELIX KIT | 1 |
| 4 | 4159710 | COUPLING D.16XD.28 FT130 HELIX KIT | 1 |
| 6 | 2127553 | STUD BOLT M12X341 KIT | 1 |
| 7 | 4214481 | STATIONARY RING HOLDER HELIX D27 ReDTC | 1 |
| 7.2 | 4214479 | > STATIONARY RING HOLDER HELIX D27 VP. | 1 |
| 7.3 | 4176513 | > O-RING FOR PUMP JACKET VP. | 1 |
| 8 | 4212724 | FILING/PURGING PLUG HELIX ReDTC KIT | 1 |
| 8.1 | | > FILLING PLUG MVI6"-304 | 1 |
| 8.2 | 4177800 | > O-RING EPDM PLUG HELIX VP. | 1 |
| 9 | 4214483 | MECH.SEAL HELIX6-10-16 O/E ReDTC KIT | 1 |
| 9.1 | 4177801 | > MECH.SEAL HELIX6-10-16 O/E VP. | 1 |
| 7.3 | 4176513 | > O-RING FOR PUMP JACKET VP. | 1 |
| 10 | 2127575 | HOUSING PIPE D.152x210 1.4301 KIT | 1 |
| 11 | 2127588 | CENTERING STAGE-RETURN HELIX16 1.4301 VP | 1 |
| 12 | 4214520 | SHAFT EQUIPMENT HELIX V16 ReDTC KIT | 1 |
| 12.1 | | > NUT-H-M10-A4.70 | 1 |
| 12.2 | | > SERRATED LOCK WASHER M+16M3-316L | 1 |
| 12.3 | | > 1/2-SNAP-RING-16M3-316L | 1 |
| 12.4 | | > STOP-RUSH-1/2-D16xd2-M+316 | 1 |
| 4.11 | | > SCREW CHC-M6X14-8.8-ISO4762-GEOMET500A | 1 |
| 4.12 | | > WASHER D.24 L6U ZINK | 1 |
| 13 | | HYDRAULIC HELIX V 1603 1.4307 | 1 |
| 14 | 4214495 | SHAFT D.16X278 HELIX 1.4057 VP. | 1 |
| 15 | 4217899 | PUMP HOUSING HELIX DN50 PN16 1.4301 KIT | 1 |
| 7.3 | 4176513 | > O-RING FOR PUMP JACKET VP. | 1 |
| 15.1 | | > BLASTING PPE HOUSING V-PN16-DN50-304 | 1 |
| 15.2 | 4217895 | > COUNTER FLANGE-G2"-PN16-GJL KIT | 1 |

| Item | Article no. | Description | Quantity |
|---|---|---|---|
| 15.3 | 4171321 | > PRIMING/DRAIN PLUG EPDM HELIX KIT | 1 |
| 16 | 2127601 | BASEPLATE HELIX V16 VP. | 1 |

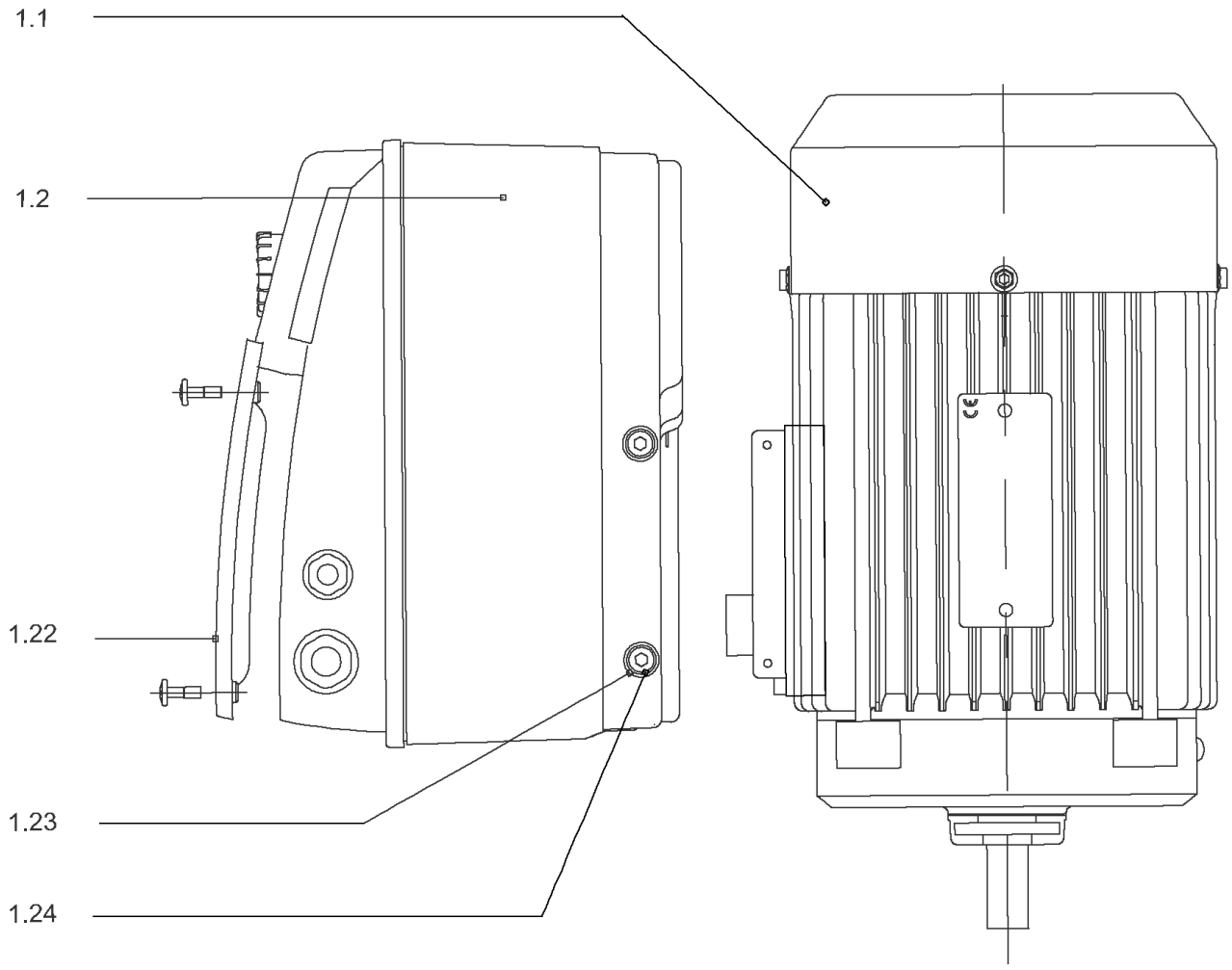
1.1
1.2
1.22
1.23
1.24

## DRIVE HELIX-VE1603-3T-IE4-WE-KIT

| Item | Article no. | Description | Quantity |
|---|---|---|---|
| 1.1 | 4207922 | MOTOR 3/2/100 3~ 380V 60HZ IE4 WE VP. | 1 |
| | | SPARE PARTS MOTOR:ON REQUEST | 1 |
| 1.2 | 4209340 | MODULE HELIX-VE1603-3.0-IE4-WE KIT | 1 |
| 1.22 | 2054227 | > MODULE COVER/GASKET TL3/4 KIT | 1 |
| 1.23 | 4215716 | > SCREW M5X16 DIN912 8.8 A2A (4pieces) VP. | 1 |
| 1.24 | 2057978 | > RONDELLE A5,3 DIN6797 FST ZN (4 PIECES) | 1 |

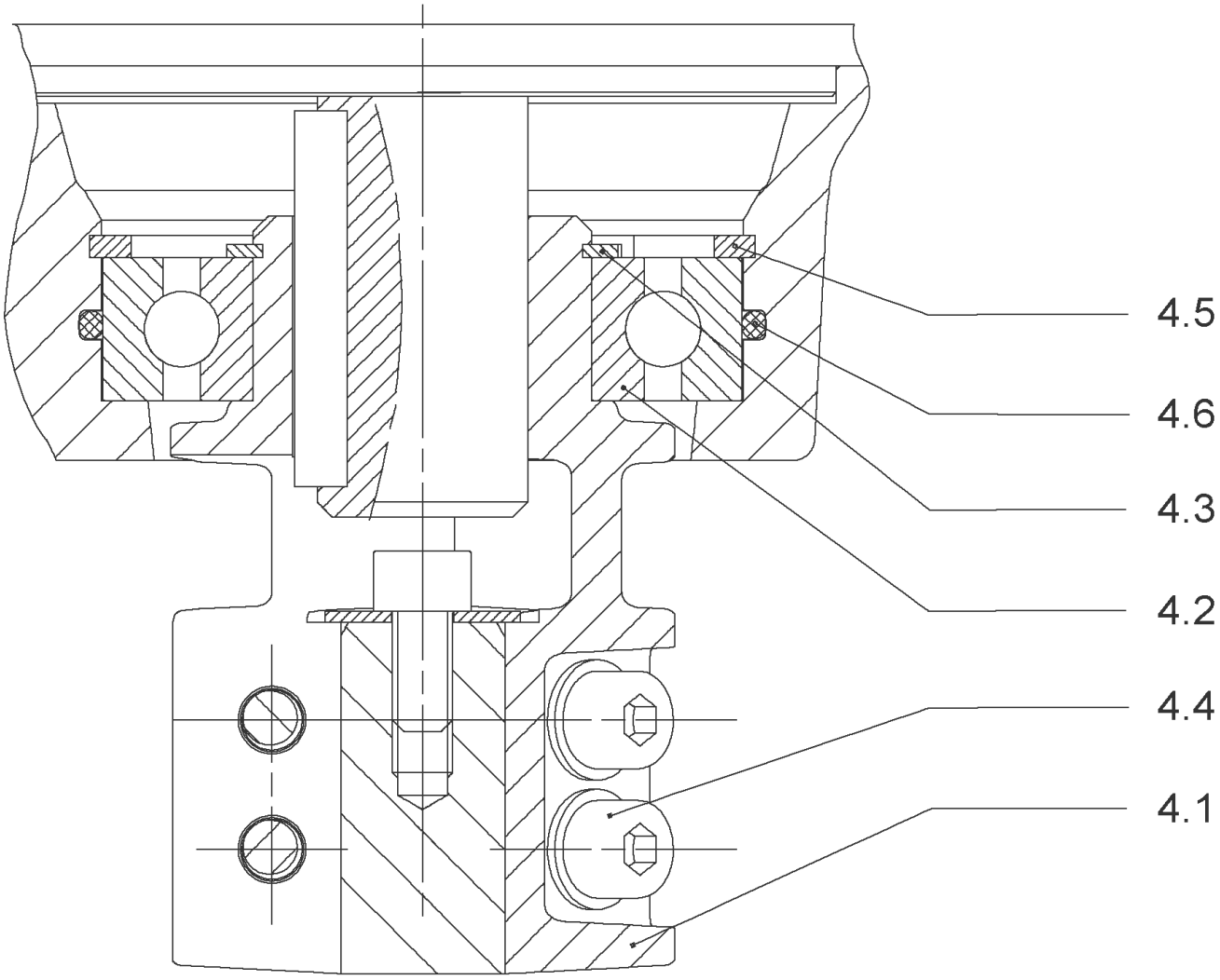
4.5
4.6
4.3
4.2
4.4
4.1

## COUPLING D.16XD.28 FT130 HELIX KIT (4159710)

| Item | Article no. | Description | Quantity |
|---|---|---|---|
| 4.1 | | COUPLING M+ Ø16XØ28 FT130 MACHINED | 1 |
| 4.2 | 2131022 | BALL BEARING 6209/ZZ-C3(HT)VP. | 1 |
| 4.3 | 4233930 | CIRCLIP-FOR-BORES-D45x1,75 VP. | 1 |
| 4.4 | 4157726 | SCREW KIT M8X30 (4 PIECES) | 1 |
| 4.5 | 4234252 | CIRCLIPS 85X3 VP. | 1 |
| 4.6 | 4234243 | O-RING 85X3 VP. | 1 |
| | | NOMEL CONTACT WASHER 8x16x1,4 STEEL ZC | 1 |

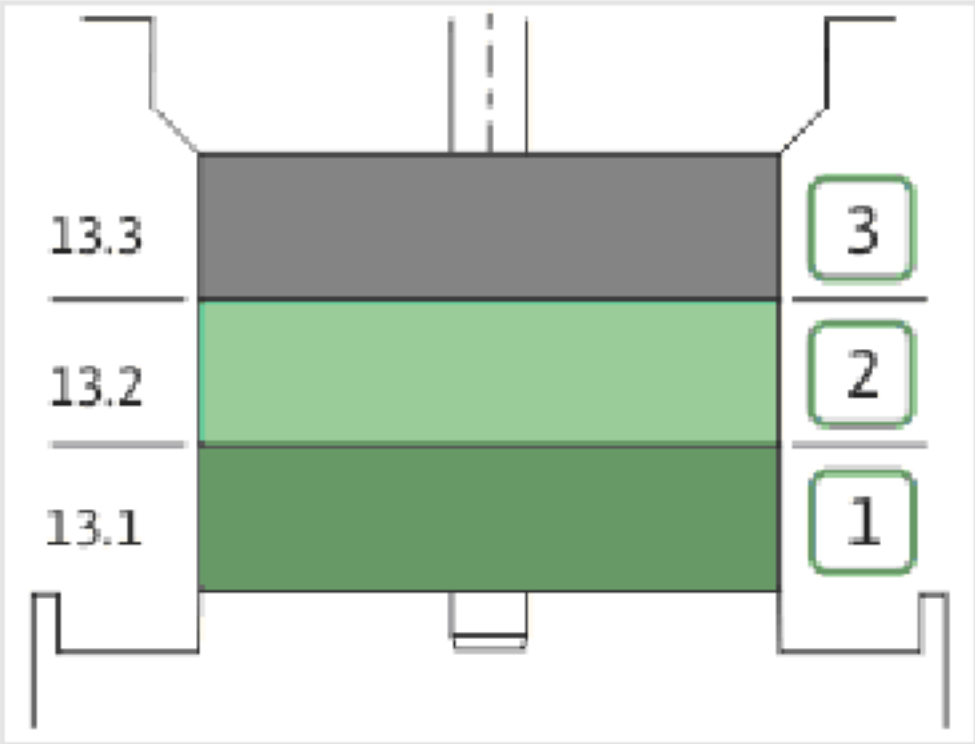
13.3
13.2
13.1
3
2
1

| Item | Article no. | Description | Quantity |
|---|---|---|---|
| 13.1 | 4159720 | STAGE HELIX 16 1.4301 KIT | 1 |
| | | > MACH.STG-CASING-WOGV-WNR-M+16-304 | 1 |
| | | > IMPELLER-M+16-304 | 1 |
| 13.2 | 4159714 | STAGE BEARING HELIX 16 1.4301 KIT | 1 |
| | | > MACH.BEARING-STG-CASING-WNR-M+16-304 | 1 |
| | | > IMPELLER-M+16-304 | 1 |
| | | > SLEEVE-SPACER-Ø19,35x30,665-304 | 1 |
| | | > SHAFT-SLEEVE-D16xD20x18-CW | 1 |
| 13.3 | 4159715 | INTERMEDIATE STAGE HELIX 16 1.4301 KIT | 1 |
| | | > CORPS-ETG-STD-ACR-AJR-USIN.M+16-304 | 1 |
| | | > IMPELLER-M+16-304 | 1 |
| | | > SPACER Ø16X19.4-L48.6-304 | 1 |

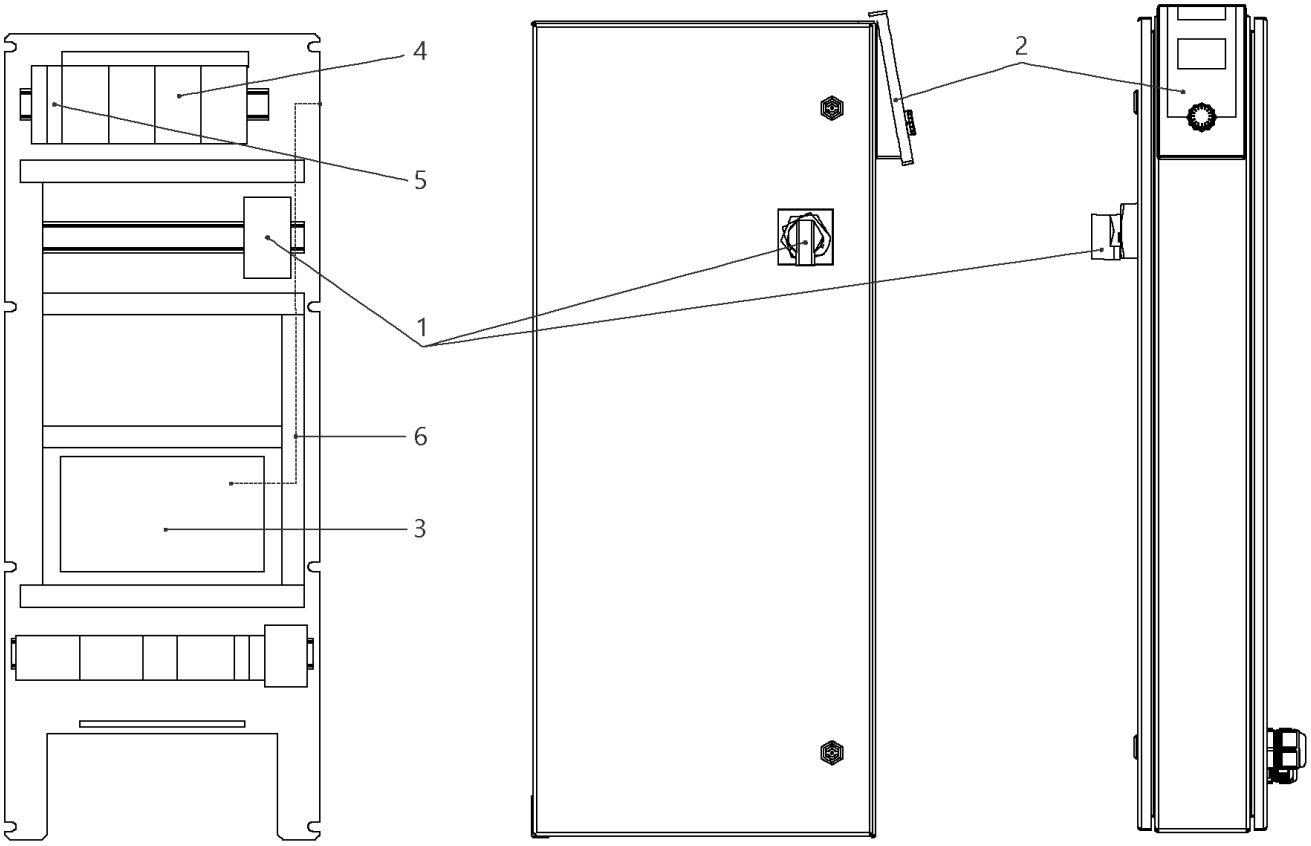
4
5
1
6
3
2

## W-CTRL-SCE-B-2x4,0KW-T4-FM-ND2

| Item | Article no. | Description | Quantity |
|---|---|---|---|
| 1 | 2104470 | MAIN SWITCH OT40F3 L250 KIT | 1 |
| 2 | 4184784 | CONTROL PANEL HMI SC KIT | 1 |
| 2 | 4185259 | ASSEMBLY DISPLAY SC PKG VP. | 1 |
| 3 | 4185257 | ASSEMBLY CPU SCe Booster VP. | 1 |
| 4 | 2051217 | AUTOM.CIRCUIT BREAKER S203 B16 TO7,5kW | 1 |
| 5 | 2046288 | CIRCUIT BREAKER S201 B16 | 1 |
| 6 | 4194956 | PATCH CABLE RJ45 CAT6 1,0M BLUE SC-PANEL | 1 |

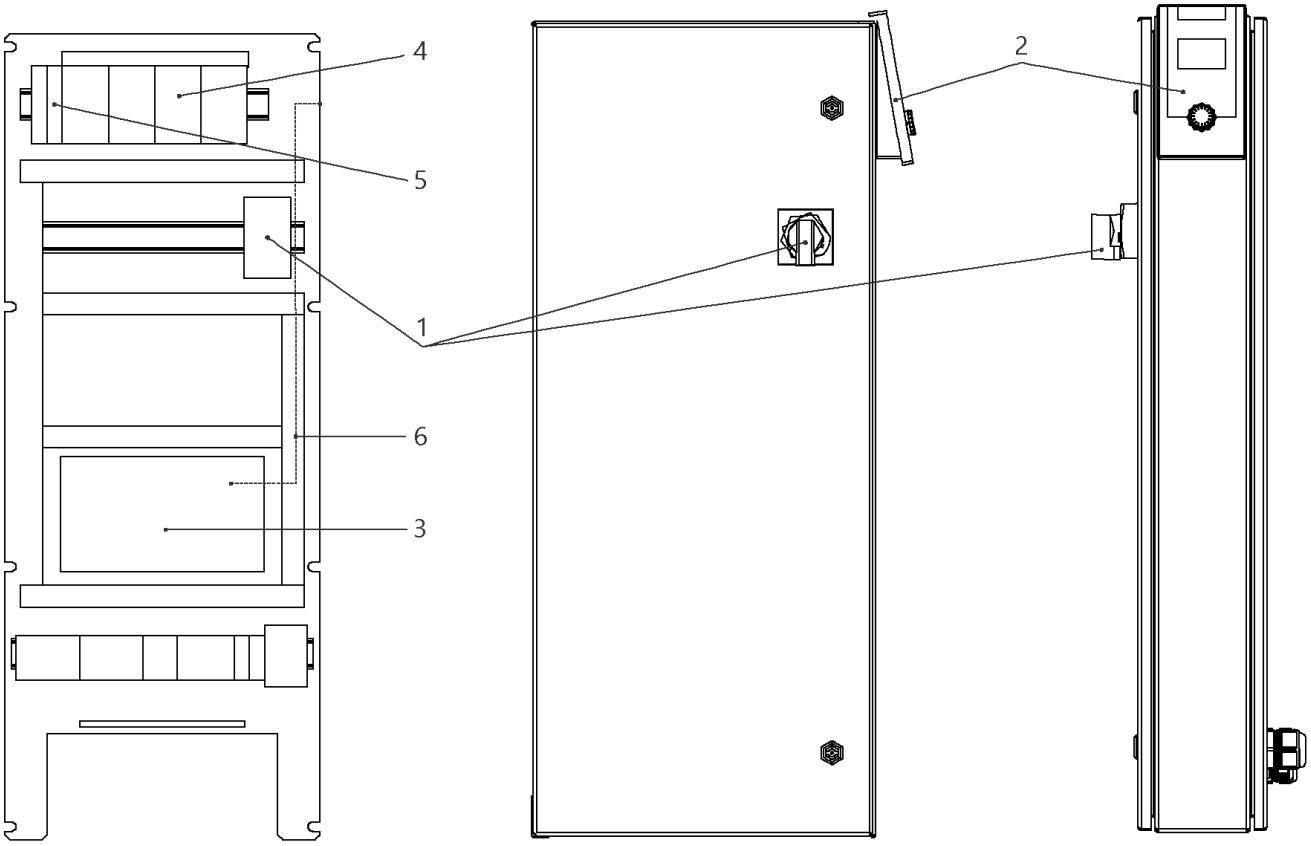
4
5
1
6
3
2

## W-CTRL-SCE-B-2x13A-T34-FM-ND2-AVC-PKG (2541905)

| Item | Article no. | Description | Quantity |
|---|---|---|---|
| 1 | 2104473 | MAIN SWITCH OT63F3 L105 KIT | 1 |
| Note: TO / BIS / JUSQU'AU 30/06/2015 | | | |
| 1 | 2104470 | MAIN SWITCH OT40F3 L250 KIT | 1 |
| Note: FROM / AB / À PARTIR DU 01/07/2015 | | | |
| 2 | 4184784 | CONTROL PANEL HMI SC KIT | 1 |
| 2 | 4185259 | ASSEMBLY DISPLAY SC PKG VP. | 1 |
| Note: DISPLAY ALONE / PLATINE SEULE | | | |
| 3 | 4185257 | ASSEMBLY CPU SCe Booster VP. | 1 |
| 4 | 2051217 | AUTOM.CIRCUIT BREAKER S203 B16 TO7,5kW | 1 |
| 5 | 2046288 | CIRCUIT BREAKER S201 B16 | 1 |
| 6 | 4194956 | PATCH CABLE RJ45 CAT6 1,0M BLUE SC-PANEL | 1 |

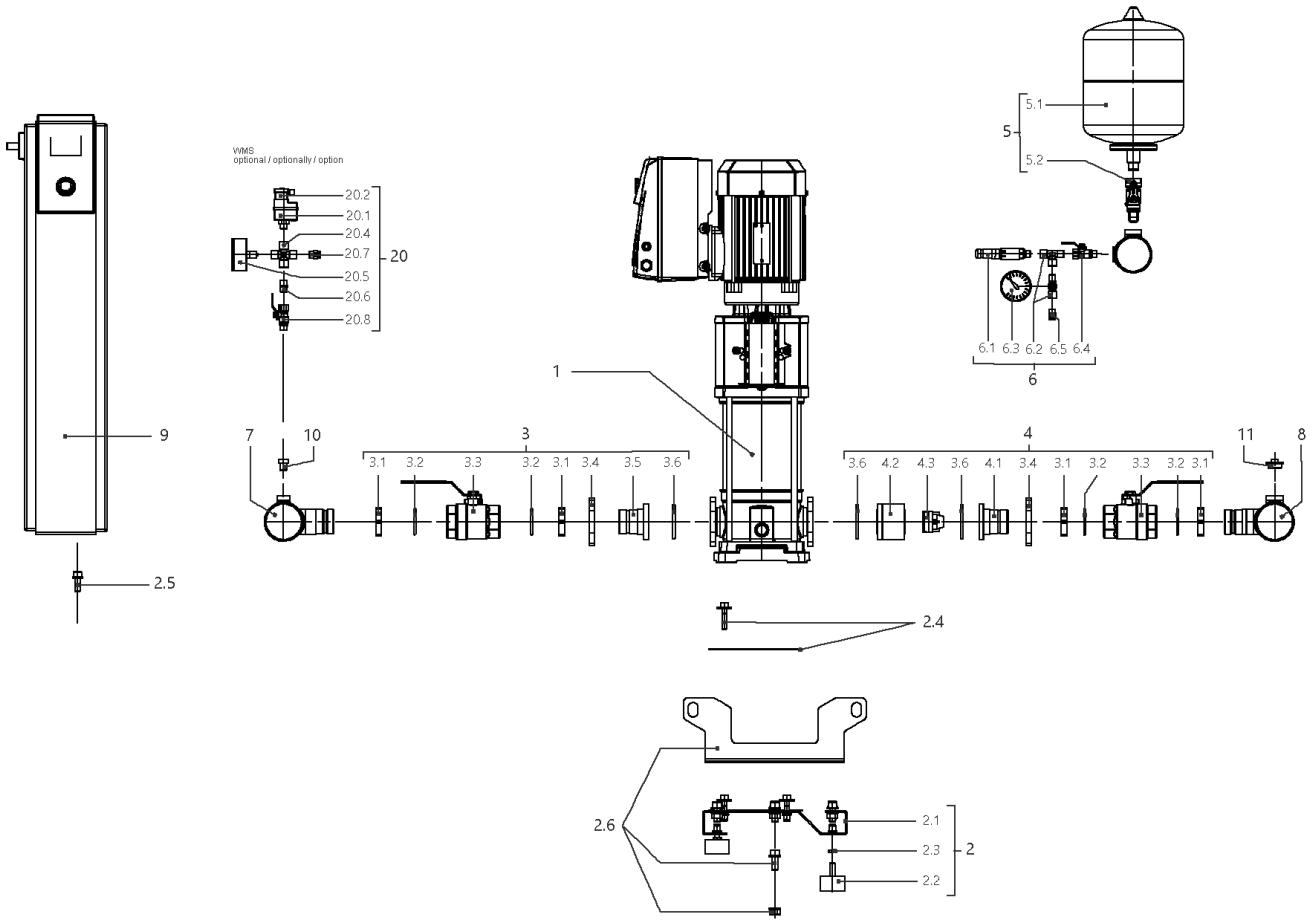
VVMS
optional / optionally / option
20.2
20.1
20.4
20.7
20.5
20.6
20.8
20
5.1
5
5.2
6.1 6.3 6.2 6.5 6.4
6
1
9
7
10
3
3.1 3.2 3.3 3.2 3.1 3.4 3.5 3.6
4
3.6 4.2 4.3 3.6 4.1 3.4 3.1 3.2 3.3 3.2 3.1
11
8
2.5
2.4
2.6
2.1
2.3
2.2
2

## SiBoost Smart 2HELIX VE1603/4kW (2536334)

| Item | Article no. | Description | Quantity |
|---|---|---|---|
| 1 | | HELIX VE1603-4.0-1/16/E/S | 1 |
| Note: TO / BIS / JUSQU'AU 30/04/2016 | | | |
| 1 | 4201561 | HELIX VE1603-4.0-1/16/E/S | 1 |
| Note: FROM / AB / À PARTIR DU 01/05/2016 | | | |
| 2 | 4197125 | BASE PLATE DE2 850x420 KIT | 1 |
| 2.1 | | > BASEPLATE_2x4/6/10/16V_E300_BOX_150 | 1 |
| 2.2 | 2028654 | > VIBRATION DAMPER D.50X30 M10X28 | 1 |
| 2.3 | 2028281 | > NUT M10 DIN936 (ISO4035) 17H VZ | 1 |
| 2.4 | 4197083 | > HOLDER PUMP Helix 10/16 KIT | 1 |
| 2.5 | 4197084 | > HOLDER SWITCHBOX WILO Smart Control KIT | 1 |
| 2.6 | 4197117 | > LIFTING Siboost HELIX SC KIT | 1 |
| 3 | 4197072 | SUCTION SIDE Siboost Helix10/16 KIT | 1 |
| 3.1 | 2032623 | > NUT G1 1/2"SW55 MS | 1 |
| 3.2 | 2032616 | > O-RING ID.44X3,53N DIN3771 E7502 | 1 |
| 3.2 | 2534877 | > BALL TAP KDW40-H G11/2I-I-DN40 DVGW | 1 |
| 3.4 | 2032626 | > OVAL FLANGE D52-LK100 ST-VZ | 1 |
| 3.5 | 2032627 | > UNION INSERT DN40 LAPPED FLANGE | 1 |
| 3.6 | 2032628 | > O-RING ID.56,52X5,33N DIN3771 E7502 | 1 |
| 4 | 4197829 | DELIVERY SIDE Siboost Helix V16 KIT | 1 |
| 3.1 | 2032623 | > NUT G1 1/2"SW55 MS | 1 |
| 3.2 | 2032616 | > O-RING ID.44X3,53N DIN3771 E7502 | 1 |
| 3.3 | 2534877 | > BALL TAP KDW40-H G11/2I-I-DN40 DVGW | 1 |
| 3.4 | 2032626 | > OVAL FLANGE D52-LK100 ST-VZ | 1 |
| 4.1 | 2054274 | > UNION INSERT DN40 LAPPED FLANGE(W.COLLAR | 1 |
| 4.2 | 2054270 | > HOUSING RFV(RV-IN) DN50 MS VP. | 1 |
| 4.3 | 2028284 | > NON-RETURN DEVICE UNIT NV50/DN50 VP. | 1 |
| 3.6 | 2032628 | > O-RING ID.56,52X5,33N DIN3771 E7502 | 1 |
| 5 | 2032642 | DIAPHREM TANK 8L/PN16 DIN4807/T5 KIT | 1 |
| 5.1 | 2045914 | > DIAPHREM TANK 8L TYP-DD 16BAR | 1 |
| 5.2 | 2027853 | > FLOW FITTING G3/4 FOR DIAPHRAGM VES. | 1 |
| 6 | 4197076 | PRESSURE SENSOR/ GAUGE 0-16BAR KIT | 1 |
| 6.1 | 2085909 | > PRESS.SENSOR 1/4" 0-16BAR 4-20MA VP. | 1 |
| 6.2 | 4197077 | > T-PIECE 1/4" VP. | 1 |
| 6.3 | 2028692 | > PRESSURE GAUGE NG63-PN16-G1/4 | 1 |

| Item | Article no. | Description | Quantity |
|---|---|---|---|
| 6.4 | 2028291 | > BALL TAP R1/4" PN42 GIACOMINI R254DL | 1 |
| 6.5 | 2028691 | > BLOWGUN 1/4" MS 30BAR VP. | 1 |
| 7 | 4197830 | PIPE DE2 3''-2x11/2"+1x1/4x600 VP. | 1 |
| 8 | 4197831 | PIPE DE2 3''-2x11/2"+1x1/4+1x3/4x600 VP. | 1 |
| 9 | | W-CTRL-SCE-B-2x4,0KW-T4-FM-ND2 | 1 |
| Note: TO / BIS / JUSQU'AU 18/05/2014 | | | |
| 9 | 2541905 | W-CTRL-SCE-B-2x13A-T34-FM-ND2-AVC-PKG | 1 |
| Note: FROM / AB / À PARTIR DU 19/05/2014 | | | |
| 10 | 4197079 | PLUG G1/4"x10 AISI304 KIT | 1 |
| 11 | 2032654 | PLUG R3/4" MS VIEGA 1751 | 1 |
| 20 | 2521150 | ASSEMBLY WMS. DE-EB. +VP | 1 |
| 20.1 | 2028652 | > PRESSURE SWITCH PS3-ASR 1/(1,3) VP. | 1 |
| 20.2 | 2130983 | > PLUG PS3-415 WITH KABEL 1,5M 2NO VP. | 1 |
| 20.4 | 2028290 | > CROSSPIECE R1/4" MS-NICKEL | 1 |
| 20.5 | 2028687 | > PRESSURE GAUGE NG63 R1/4" HI.0-6BAR | 1 |
| 20.6 | 2054268 | > DUAL NIPPLE G1/4" x G1/4" MS VP. | 1 |
| 20.7 | 2028691 | > BLOWGUN 1/4" MS 30BAR VP. | 1 |
| 20.8 | 2028291 | > BALL TAP R1/4" PN42 GIACOMINI R254DL | 1 |

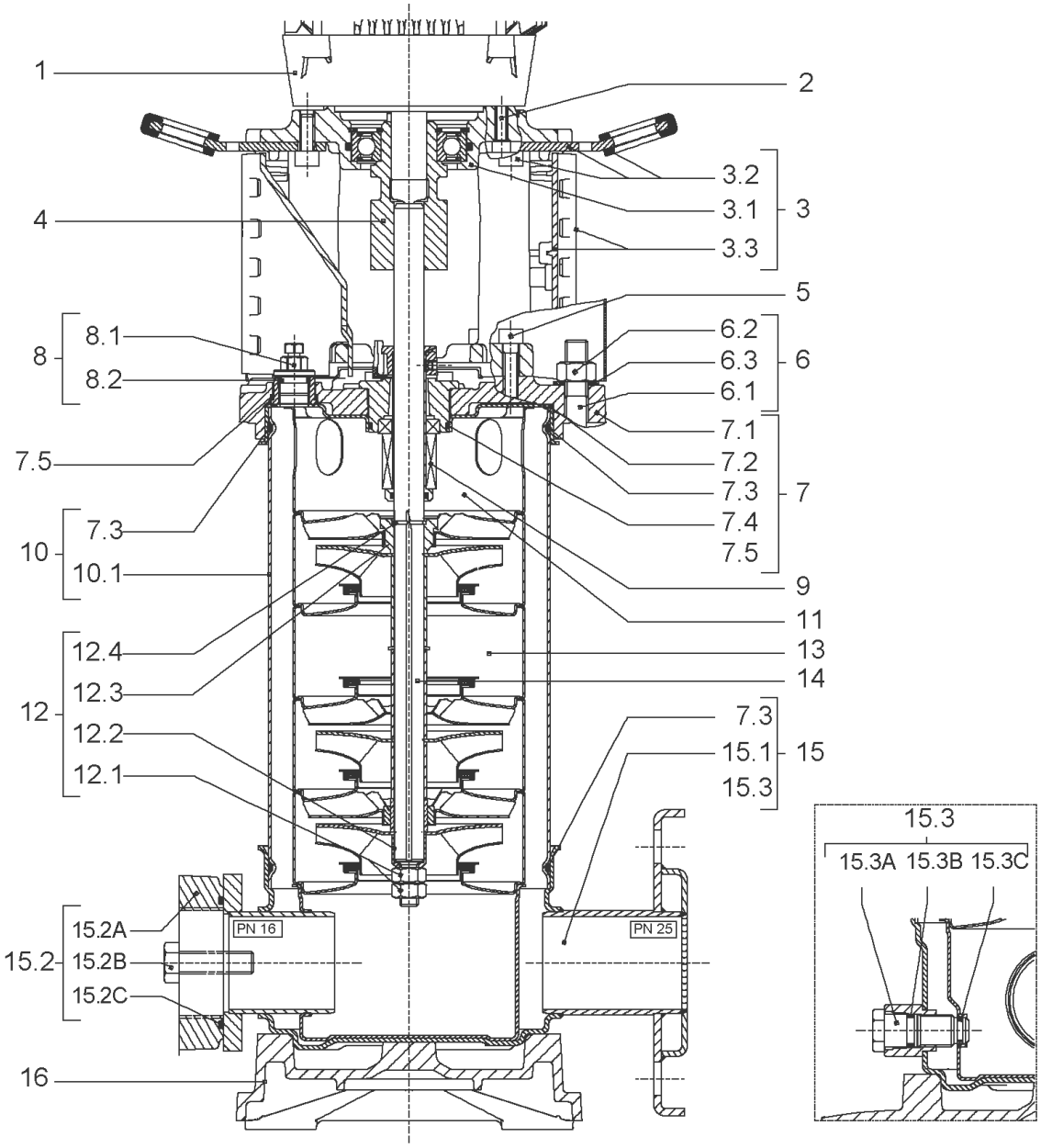
1
2
3.2
3.1
3
3.3
4
5
8.1
8
8.2
6.2
6.3
6
6.1
7.1
7.2
7.5
7.3
7
7.4
7.3
10
7.5
10.1
9
11
12.4
13
12.3
14
12
12.2
7.3
15.1
15
12.1
15.3
15.3
15.3A 15.3B 15.3C
15.2A
PN 16
PN 25
15.2
15.2B
15.2C
16

| Item | Article no. | Description | Quantity |
|---|---|---|---|
| 1 | | DRIVE HELIX-VE1603-IE2-ATB KIT | 1 |
| Note: MOTOR BRAND ATB | | | |
| 1 | | DRIVE HELIX-VE1603-IE2-WE KIT | 1 |
| Note: MOTOR BRAND WILO ELEC | | | |
| 1 | | DRIVE HELIX-VE1603-4T-IE4-WE-KIT | 1 |
| Note: MOTOR BRAND WILO ELEC | | | |
| 2 | 4159703 | SCREW M8X40 (4 PIECES) | 1 |
| 3 | 4172789 | LANTERN FT130 HELIX V10 KIT | 1 |
| 3.1 | | > M+5_6_LANTERN_ONE-PIECE_FT130_CATA | 1 |
| 3.2 | 2127604 | > EYELET CPL.FT HELIX(2 PIECES) | 1 |
| 3.3 | 4159692 | > COUPLING PROTECTOR FT HELIX KIT | 1 |
| 4 | 4159710 | COUPLING D.16XD.28 FT130 HELIX KIT | 1 |
| 5 | 4159707 | SCREW M8X30 (4 PIECES) | 1 |
| 6 | 4177817 | STUD BOLT M12X341 KIT | 1 |
| 6.1 | | > TIE BOLT M12-341x18x30-1.4057 | 1 |
| 6.2 | 2094647 | > NUT M12 M12 ISO4032 VP. | 1 |
| 6.3 | 2123557 | > WASHER CS-12.4-24-1.6-NFE25 (4 PIECES) | 1 |
| 7 | 4210143 | STATIONARY RING HOLDER HELIX 6" EPDM | 1 |
| 7.2 | 2127607 | > STATIONARY RING HOLDER 6" HELIX 1.4301 V | 1 |
| 7.3 | 4176513 | > O-RING FOR PUMP JACKET VP. | 1 |
| 7.4 | 2127603 | > O-RING ID.37,6x2,4 EPDM VP. | 1 |
| 7.5 | 2127602 | > O-RING ID.21,35x2 EPDM VP. | 1 |
| 8 | 4159686 | FILING/PURGING PLUG HELIX EPDM KIT | 1 |
| 9 | 4171327 | SEAL-KIT-HELIX6-10-16 O/E KIT | 1 |
| 10 | 2127575 | HOUSING PIPE D.152x210 1.4301 KIT | 1 |
| 11 | 2127588 | CENTERING STAGE-RETURN HELIX16 1.4301 VP | 1 |
| 12 | 4209329 | SHAFT EQUIPMENT HELIX V16 KIT | 1 |
| 12.1 | | > NUT-H-M10-A4.70 | 1 |
| 12.2 | | > SERRATED LOCK WASHER M+16M3-316L | 1 |
| 12.3 | | > IMPELLER STOP RING L35,9-304 | 1 |
| 12.4 | | > STOP-RUSH-1/2-D16xd2-M+316 | 1 |
| 13 | | HYDRAULIC HELIX V 1603 1.4307 | 1 |
| 14 | 2127564 | SHAFT D.16X330 1.4301 VP. | 1 |
| 15 | 4217899 | PUMP HOUSING HELIX DN50 PN16 1.4301 KIT | 1 |

| Item | Article no. | Description | Quantity |
|---|---|---|---|
| 7.3 | 4176513 | > O-RING FOR PUMP JACKET VP. | 1 |
| 15.1 | | > BLASTING PPE HOUSING V-PN16-DN50-304 | 1 |
| 15.2 | 4217895 | > COUNTER FLANGE-G2"-PN16-GJL KIT | 1 |
| 15.3 | 4171321 | > PRIMING/DRAIN PLUG EPDM HELIX KIT | 1 |
| 16 | 2127601 | BASEPLATE HELIX V16 VP. | 1 |

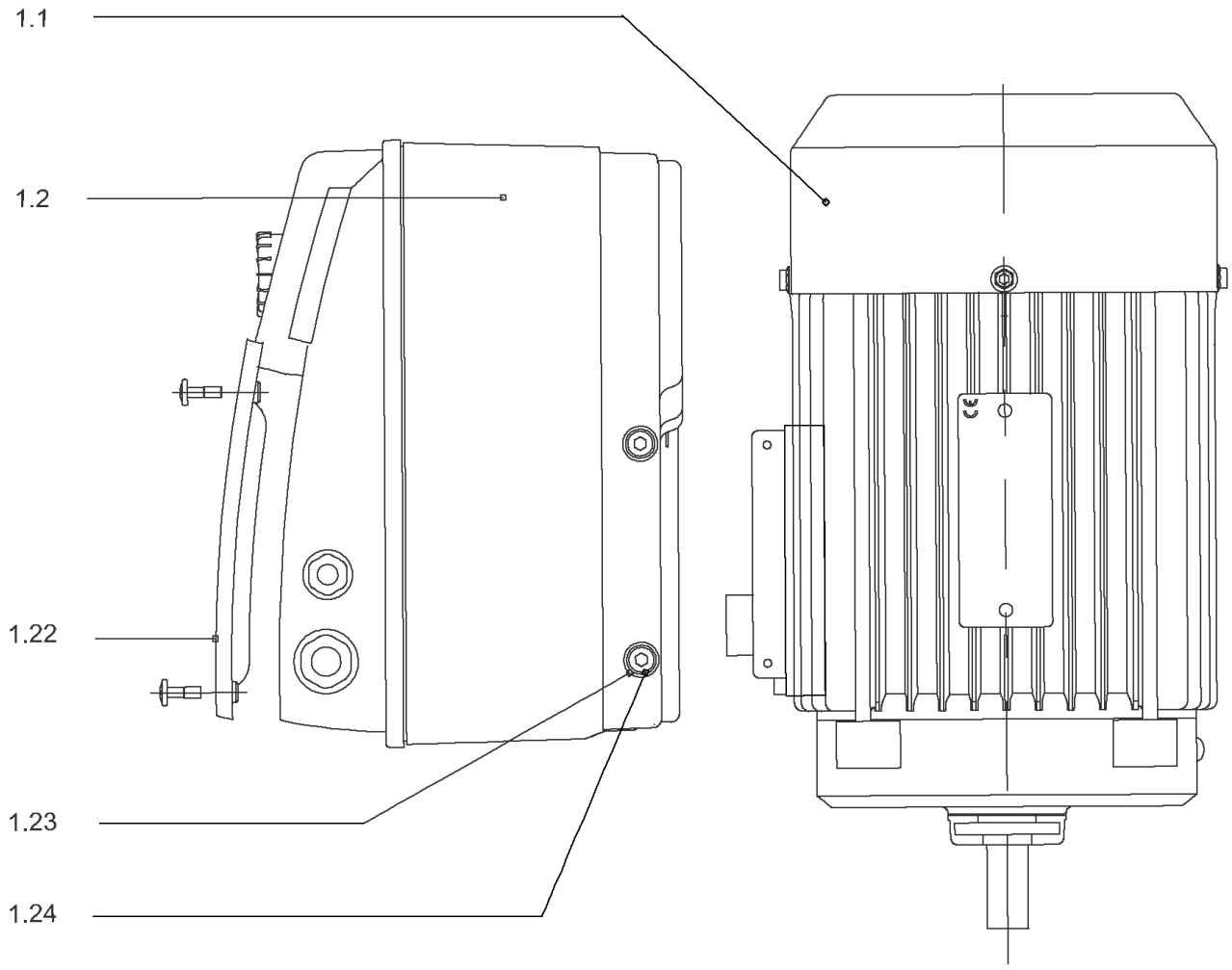
1.1
1.2
1.22
1.23
1.24

## DRIVE HELIX-VE1603-IE2-ATB KIT

| Item | Article no. | Description | Quantity |
|---|---|---|---|
| 1.1 | | MOTOR 4/2/112 3~ 380V 60HZ IE2 ATB VP. | 1 |
| Note: no longer available /nicht mehrlieferbarn'est plus disponible | | | |
| | | SPARE PARTS MOTOR:ON REQUEST | 1 |
| 1.2 | 4179126 | MODULE HELIX-VE1603-IE2-ATB KIT | 1 |
| 1.22 | 2054227 | > MODULE COVER/GASKET TL3/4 KIT | 1 |
| 1.23 | 4215716 | > SCREW M5X16 DIN912 8.8 A2A (4pieces) VP. | 1 |
| 1.24 | 2057978 | > RONDELLE A5,3 DIN6797 FST ZN (4 PIECES) | 1 |

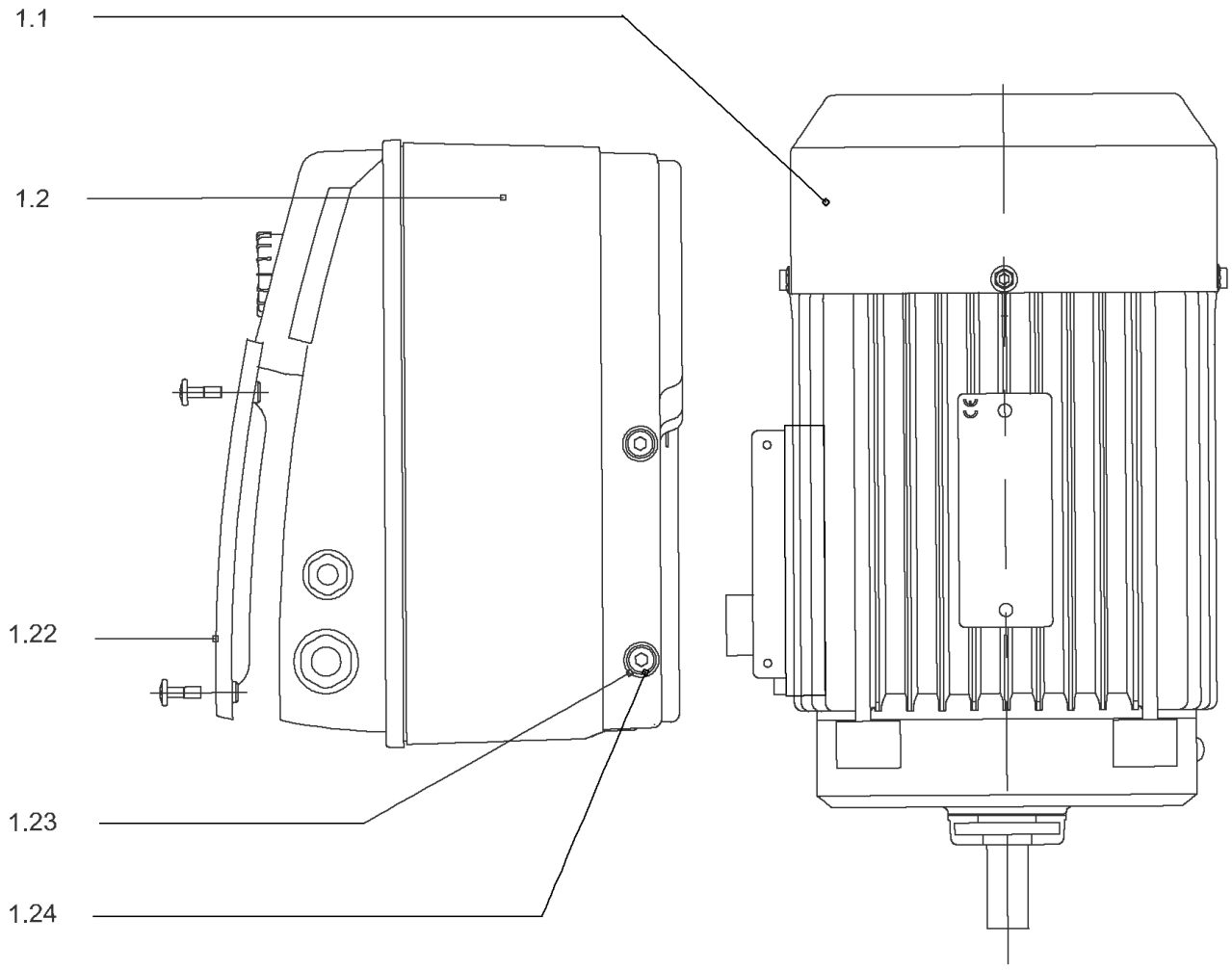
1.1
1.2
1.22
1.23
1.24

## DRIVE HELIX-VE1603-IE2-WE KIT

| Item | Article no. | Description | Quantity |
|---|---|---|---|
| 1.1 | 4188824 | MO.4/2/112 3~380V 60Hz IE2 WE VP. | 1 |
| | | SPARE PARTS MOTOR:ON REQUEST | 1 |
| 1.2 | 4188825 | MODULE HELIX-VE1603-4.0-IE2-WE KIT | 1 |
| 1.22 | 2054227 | > MODULE COVER/GASKET TL3/4 KIT | 1 |
| 1.23 | 4215716 | > SCREW M5X16 DIN912 8.8 A2A (4pieces) VP. | 1 |
| 1.24 | 2057978 | > RONDELLE A5,3 DIN6797 FST ZN (4 PIECES) | 1 |

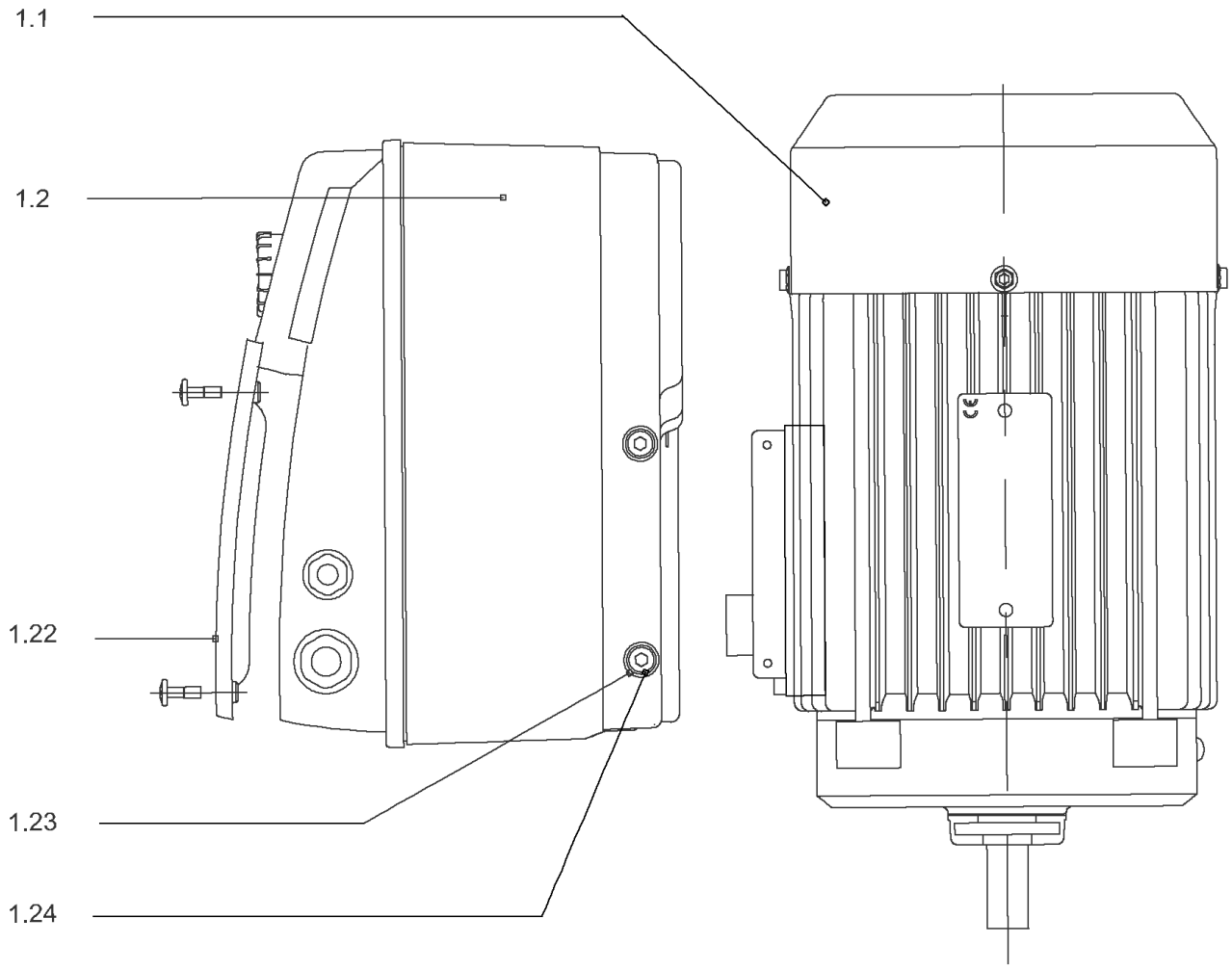
1.1
1.2
1.22
1.23
1.24

## DRIVE HELIX-VE1603-4T-IE4-WE-KIT

| Item | Article no. | Description | Quantity |
|---|---|---|---|
| 1.1 | 4207924 | MOTOR 4/2/112 3~ 380V 60HZ IE4 WE VP. | 1 |
| | | SPARE PARTS MOTOR:ON REQUEST | 1 |
| 1.2 | 4209607 | MODULE HELIX-VE1603-4.0-IE4-WE KIT | 1 |
| 1.22 | 2054227 | > MODULE COVER/GASKET TL3/4 KIT | 1 |
| 1.23 | 4215716 | > SCREW M5X16 DIN912 8.8 A2A (4pieces) VP. | 1 |
| 1.24 | 2057978 | > RONDELLE A5,3 DIN6797 FST ZN (4 PIECES) | 1 |

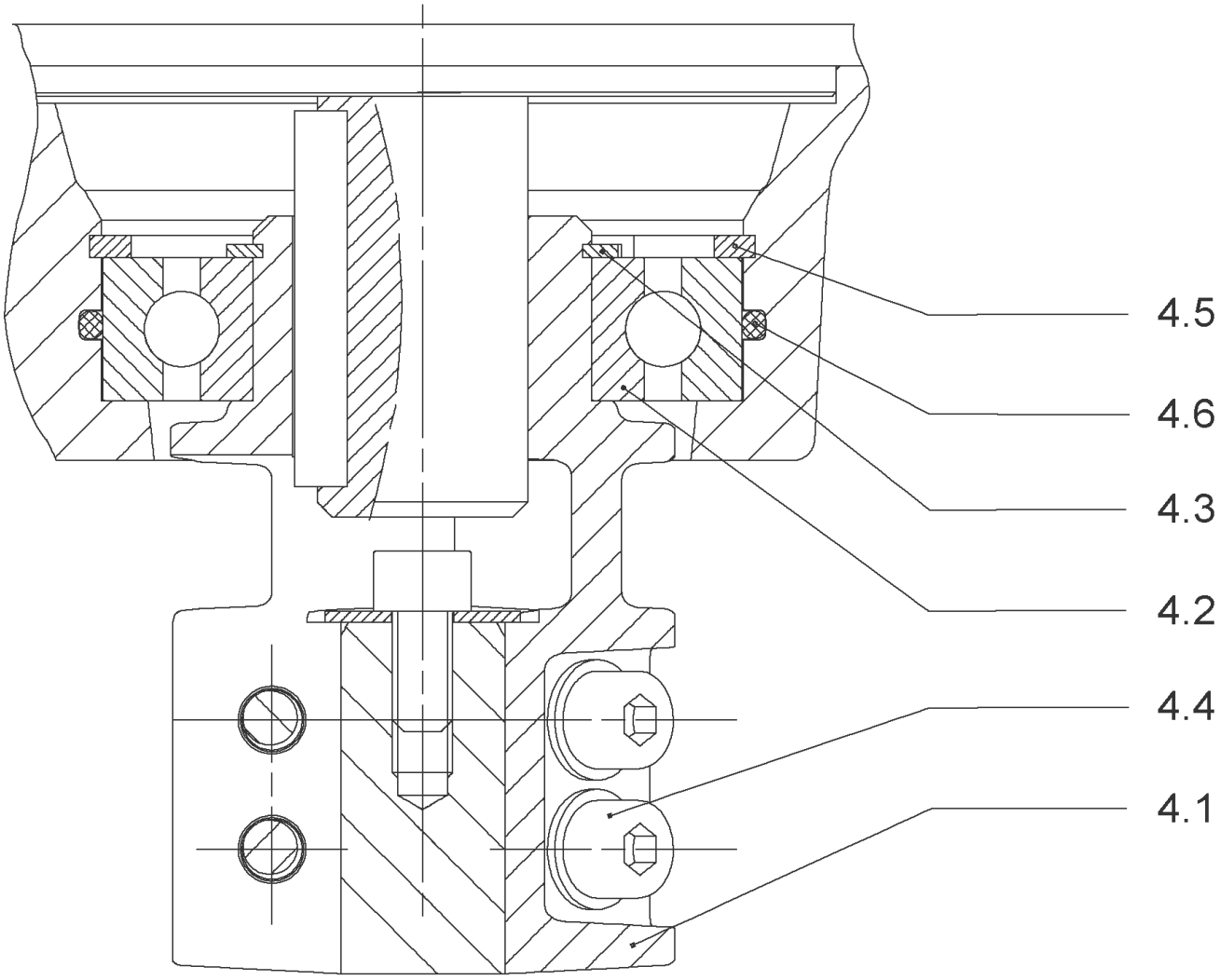
4.5
4.6
4.3
4.2
4.4
4.1

## COUPLING D.16XD.28 FT130 HELIX KIT (4159710)

| Item | Article no. | Description | Quantity |
|---|---|---|---|
| 4.1 | | COUPLING M+ Ø16XØ28 FT130 MACHINED | 1 |
| 4.2 | 2131022 | BALL BEARING 6209/ZZ-C3(HT)VP. | 1 |
| 4.3 | 4233930 | CIRCLIP-FOR-BORES-D45x1,75 VP. | 1 |
| 4.4 | 4157726 | SCREW KIT M8X30 (4 PIECES) | 1 |
| 4.5 | 4234252 | CIRCLIPS 85X3 VP. | 1 |
| 4.6 | 4234243 | O-RING 85X3 VP. | 1 |
| | | NOMEL CONTACT WASHER 8x16x1,4 STEEL ZC | 1 |

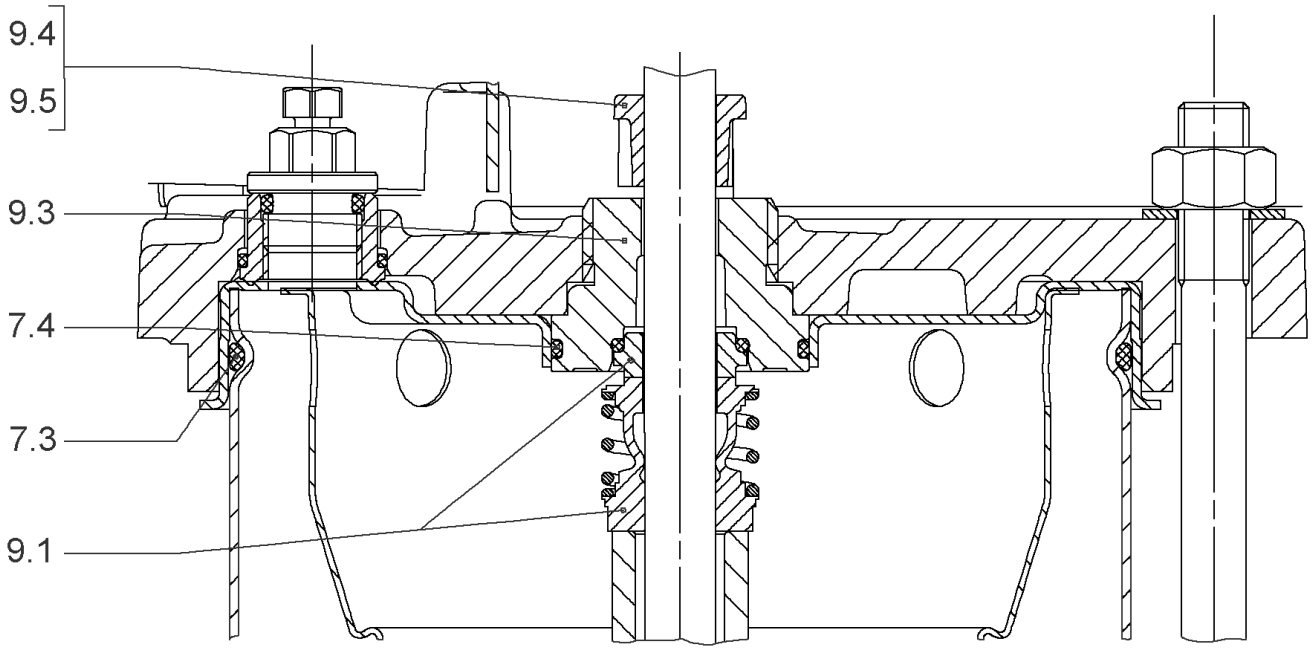
9.4
9.5
9.3
7.4
7.3
9.1

## SEAL-KIT-HELIX6-10-16 O/E KIT (4171327)

| Item | Article no. | Description | Quantity |
|---|---|---|---|
| 7.3 | 4176513 | O-RING FOR PUMP JACKET VP. | 1 |
| 7.4 | 2127603 | O-RING ID.37,6x2,4 EPDM VP. | 1 |
| 9.1 | 4177801 | MECH.SEAL HELIX6-10-16 O/E VP. | 1 |
| 9.3 | 4177798 | MACHINED RING HOLDER M+6" Ø16 304 VP. | 1 |
| 9.5 | 4177799 | MACHINED DRIVE RING Ø16 VP. | 1 |
| 9.4 | 4176520 | SCREW CH M5x5 A4-70 ( 3PIECES ) | 1 |

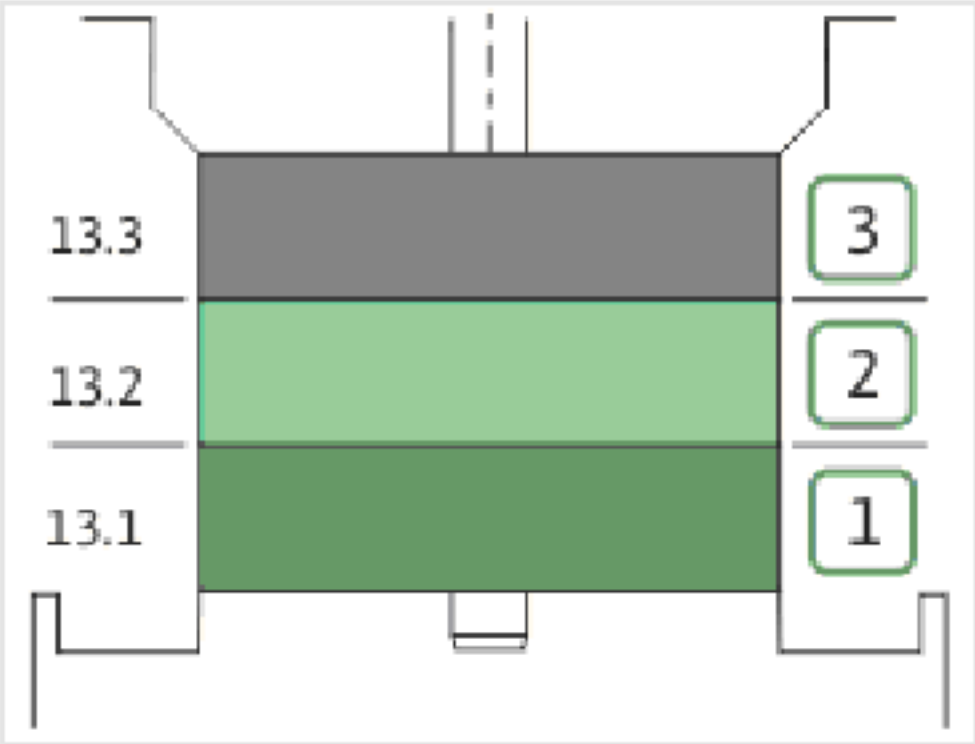
13.3
13.2
13.1
3
2
1

| Item | Article no. | Description | Quantity |
|---|---|---|---|
| 13.1 | 4159720 | STAGE HELIX 16 1.4301 KIT | 1 |
| | | > MACH.STG-CASING-WOGV-WNR-M+16-304 | 1 |
| | | > IMPELLER-M+16-304 | 1 |
| 13.2 | 4159714 | STAGE BEARING HELIX 16 1.4301 KIT | 1 |
| | | > MACH.BEARING-STG-CASING-WNR-M+16-304 | 1 |
| | | > IMPELLER-M+16-304 | 1 |
| | | > SLEEVE-SPACER-Ø19,35x30,665-304 | 1 |
| | | > SHAFT-SLEEVE-D16xD20x18-CW | 1 |
| 13.3 | 4159715 | INTERMEDIATE STAGE HELIX 16 1.4301 KIT | 1 |
| | | > CORPS-ETG-STD-ACR-AJR-USIN.M+16-304 | 1 |
| | | > IMPELLER-M+16-304 | 1 |
| | | > SPACER Ø16X19.4-L48.6-304 | 1 |

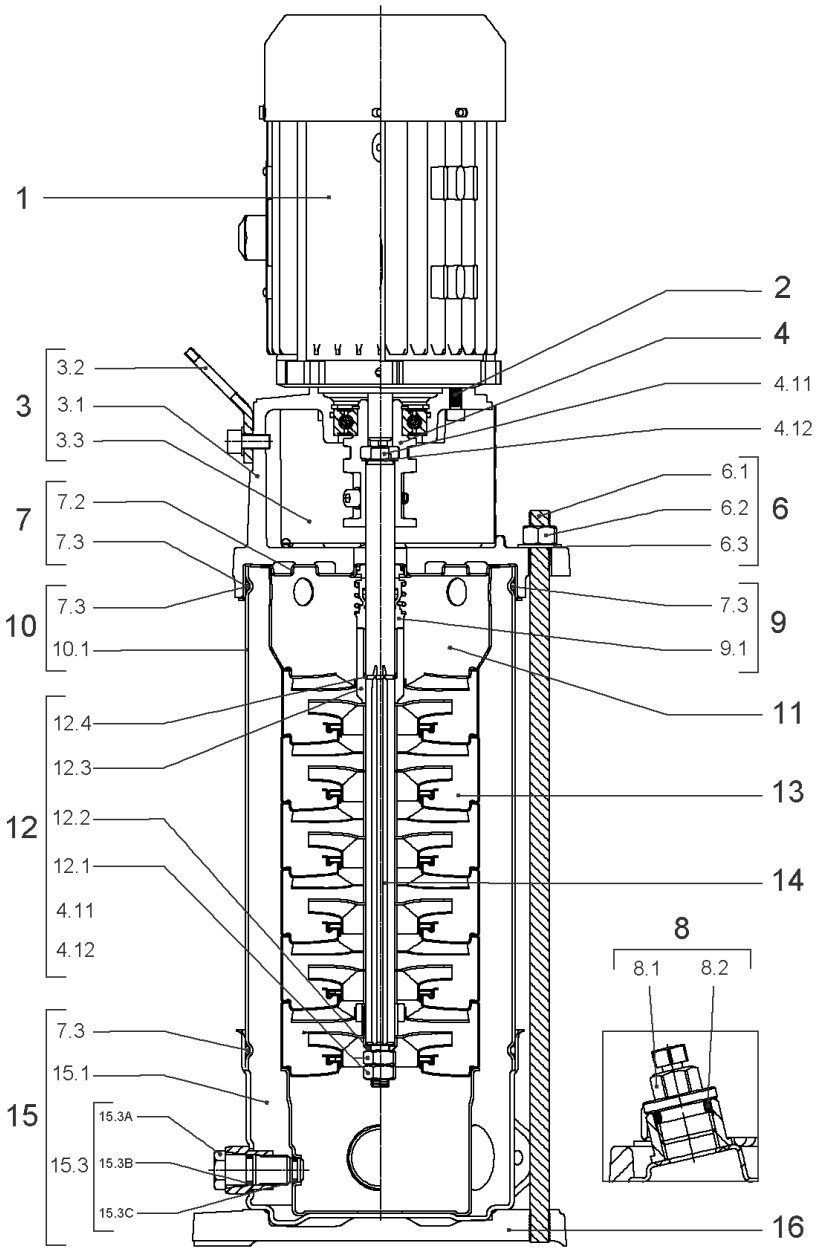
1
2
4
4.11
4.12
3
3.2
3.1
3.3
7
7.2
7.3
10
7.3
10.1
6
6.1
6.2
6.3
9
7.3
9.1
11
12
12.4
12.3
12.2
12.1
4.11
4.12
13
14
8
8.1
8.2
15
7.3
15.1
15.3
15.3A
15.3B
15.3C
16

## HELIX VE1603-4.0-1/16/E/S (4201561)

| Item | Article no. | Description | Quantity |
|---|---|---|---|
| 1 | | DRIVE HELIX-VE1603-4T-IE4-WE-KIT | 1 |
| Note: MOTOR BRAND WILO ELEC | | | |
| | | SPARE PARTS MOTOR:ON REQUEST | 1 |
| 2 | 4159707 | SCREW M8X30 (4 PIECES) | 1 |
| 3 | 4214473 | LANTERN FT130 HELIX KIT | 1 |
| 3.1 | | > LANT-MOT-VMI-ReDTC6"-FT130-MACHINED+CATA | 1 |
| 3.2 | 4184852 | > EYELET CPL.FT HELIX (2 PIECES) | 1 |
| 3.3 | 4213782 | > COUPLING PROTECTOR FT115/130 HELIX KIT | 1 |
| 4 | 4159710 | COUPLING D.16XD.28 FT130 HELIX KIT | 1 |
| 6 | 2127553 | STUD BOLT M12X341 KIT | 1 |
| 7 | 4214481 | STATIONARY RING HOLDER HELIX D27 ReDTC | 1 |
| 7.2 | 4214479 | > STATIONARY RING HOLDER HELIX D27 VP. | 1 |
| 7.3 | 4176513 | > O-RING FOR PUMP JACKET VP. | 1 |
| 8 | 4212724 | FILING/PURGING PLUG HELIX ReDTC KIT | 1 |
| 8.1 | | > FILLING PLUG MVI6"-304 | 1 |
| 8.2 | 4177800 | > O-RING EPDM PLUG HELIX VP. | 1 |
| 9 | 4214483 | MECH.SEAL HELIX6-10-16 O/E ReDTC KIT | 1 |
| 9.1 | 4177801 | > MECH.SEAL HELIX6-10-16 O/E VP. | 1 |
| 7.3 | 4176513 | > O-RING FOR PUMP JACKET VP. | 1 |
| 10 | 2127575 | HOUSING PIPE D.152x210 1.4301 KIT | 1 |
| 11 | 2127588 | CENTERING STAGE-RETURN HELIX16 1.4301 VP | 1 |
| 12 | 4214520 | SHAFT EQUIPMENT HELIX V16 ReDTC KIT | 1 |
| 12.1 | | > NUT-H-M10-A4.70 | 1 |
| 12.2 | | > SERRATED LOCK WASHER M+16M3-316L | 1 |
| 12.3 | | > 1/2-SNAP-RING-16M3-316L | 1 |
| 12.4 | | > STOP-RUSH-1/2-D16xd2-M+316 | 1 |
| 4.11 | | > SCREW CHC-M6X14-8.8-ISO4762-GEOMET500A | 1 |
| 4.12 | | > WASHER D.24 L6U ZINK | 1 |
| 13 | | HYDRAULIC HELIX V 1603 1.4307 | 1 |
| 14 | 4214495 | SHAFT D.16X278 HELIX 1.4057 VP. | 1 |
| 15 | 4217899 | PUMP HOUSING HELIX DN50 PN16 1.4301 KIT | 1 |
| 7.3 | 4176513 | > O-RING FOR PUMP JACKET VP. | 1 |
| 15.1 | | > BLASTING PPE HOUSING V-PN16-DN50-304 | 1 |
| 15.2 | 4217895 | > COUNTER FLANGE-G2"-PN16-GJL KIT | 1 |

| Item | Article no. | Description | Quantity |
|---|---|---|---|
| 15.3 | 4171321 | > PRIMING/DRAIN PLUG EPDM HELIX KIT | 1 |
| 16 | 2127601 | BASEPLATE HELIX V16 VP. | 1 |

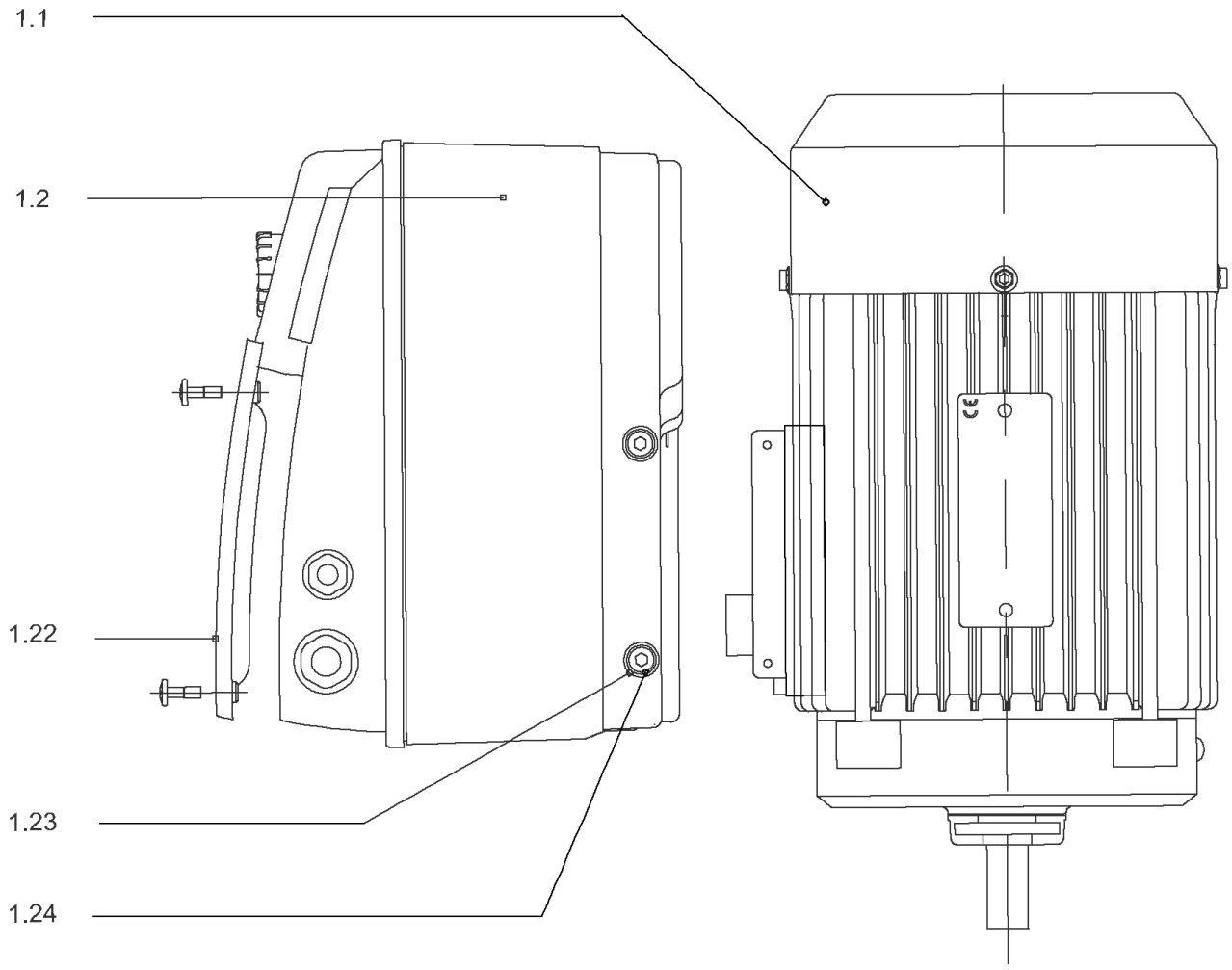
1.1
1.2
1.22
1.23
1.24

## DRIVE HELIX-VE1603-4T-IE4-WE-KIT

| Item | Article no. | Description | Quantity |
|---|---|---|---|
| 1.1 | 4207924 | MOTOR 4/2/112 3~ 380V 60HZ IE4 WE VP. | 1 |
| | | SPARE PARTS MOTOR:ON REQUEST | 1 |
| 1.2 | 4209607 | MODULE HELIX-VE1603-4.0-IE4-WE KIT | 1 |
| 1.22 | 2054227 | > MODULE COVER/GASKET TL3/4 KIT | 1 |
| 1.23 | 4215716 | > SCREW M5X16 DIN912 8.8 A2A (4pieces) VP. | 1 |
| 1.24 | 2057978 | > RONDELLE A5,3 DIN6797 FST ZN (4 PIECES) | 1 |

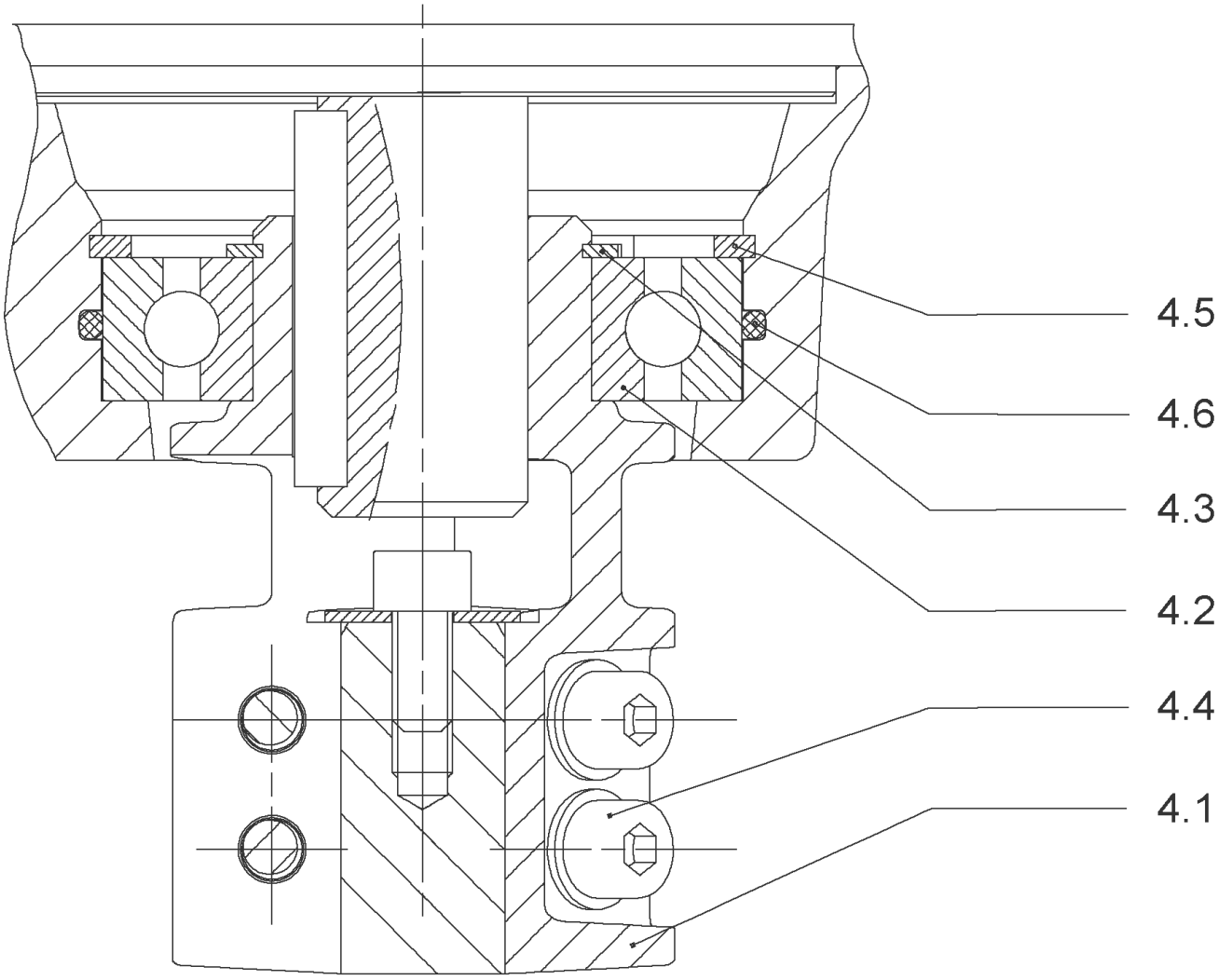
4.5
4.6
4.3
4.2
4.4
4.1

## COUPLING D.16XD.28 FT130 HELIX KIT (4159710)

| Item | Article no. | Description | Quantity |
|---|---|---|---|
| 4.1 | | COUPLING M+ Ø16XØ28 FT130 MACHINED | 1 |
| 4.2 | 2131022 | BALL BEARING 6209/ZZ-C3(HT)VP. | 1 |
| 4.3 | 4233930 | CIRCLIP-FOR-BORES-D45x1,75 VP. | 1 |
| 4.4 | 4157726 | SCREW KIT M8X30 (4 PIECES) | 1 |
| 4.5 | 4234252 | CIRCLIPS 85X3 VP. | 1 |
| 4.6 | 4234243 | O-RING 85X3 VP. | 1 |
| | | NOMEL CONTACT WASHER 8x16x1,4 STEEL ZC | 1 |

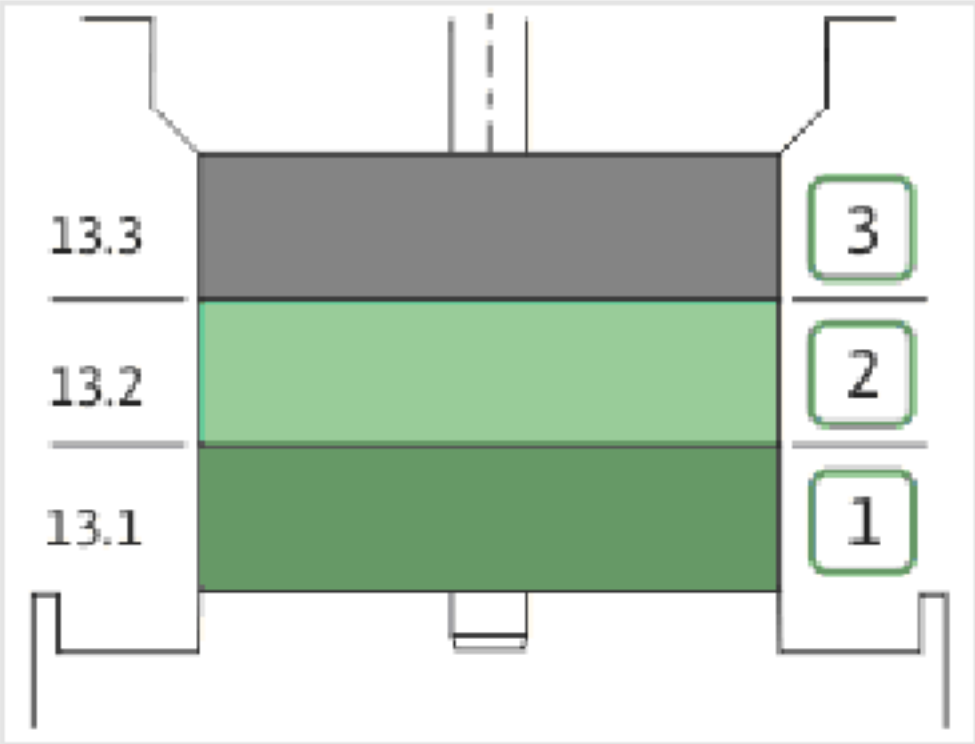
13.3
13.2
13.1
3
2
1

| Item | Article no. | Description | Quantity |
|---|---|---|---|
| 13.1 | 4159720 | STAGE HELIX 16 1.4301 KIT | 1 |
| | | > MACH.STG-CASING-WOGV-WNR-M+16-304 | 1 |
| | | > IMPELLER-M+16-304 | 1 |
| 13.2 | 4159714 | STAGE BEARING HELIX 16 1.4301 KIT | 1 |
| | | > MACH.BEARING-STG-CASING-WNR-M+16-304 | 1 |
| | | > IMPELLER-M+16-304 | 1 |
| | | > SLEEVE-SPACER-Ø19,35x30,665-304 | 1 |
| | | > SHAFT-SLEEVE-D16xD20x18-CW | 1 |
| 13.3 | 4159715 | INTERMEDIATE STAGE HELIX 16 1.4301 KIT | 1 |
| | | > CORPS-ETG-STD-ACR-AJR-USIN.M+16-304 | 1 |
| | | > IMPELLER-M+16-304 | 1 |
| | | > SPACER Ø16X19.4-L48.6-304 | 1 |

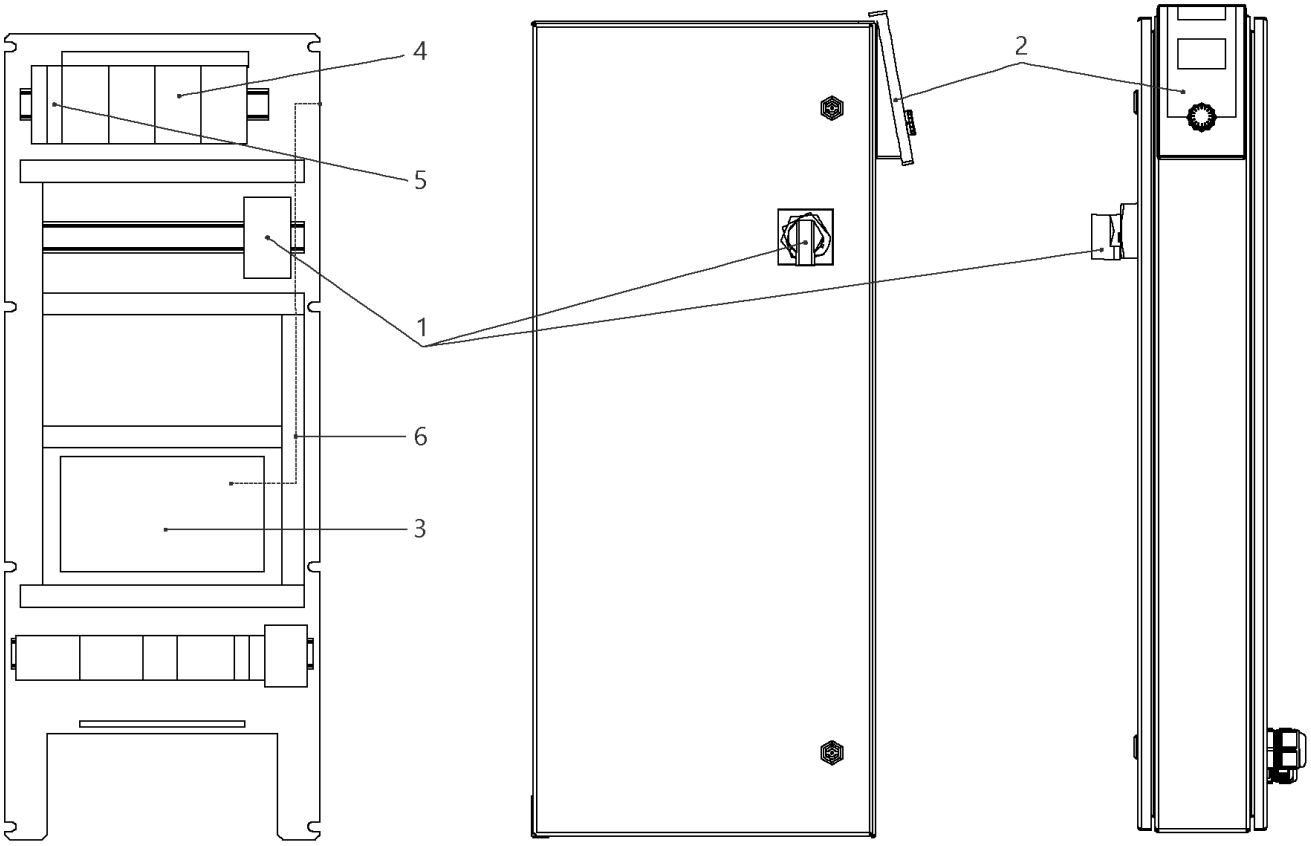
4
5
1
6
3
2

## W-CTRL-SCE-B-2x4,0KW-T4-FM-ND2

| Item | Article no. | Description | Quantity |
|---|---|---|---|
| 1 | 2104470 | MAIN SWITCH OT40F3 L250 KIT | 1 |
| 2 | 4184784 | CONTROL PANEL HMI SC KIT | 1 |
| 2 | 4185259 | ASSEMBLY DISPLAY SC PKG VP. | 1 |
| 3 | 4185257 | ASSEMBLY CPU SCe Booster VP. | 1 |
| 4 | 2051217 | AUTOM.CIRCUIT BREAKER S203 B16 TO7,5kW | 1 |
| 5 | 2046288 | CIRCUIT BREAKER S201 B16 | 1 |
| 6 | 4194956 | PATCH CABLE RJ45 CAT6 1,0M BLUE SC-PANEL | 1 |

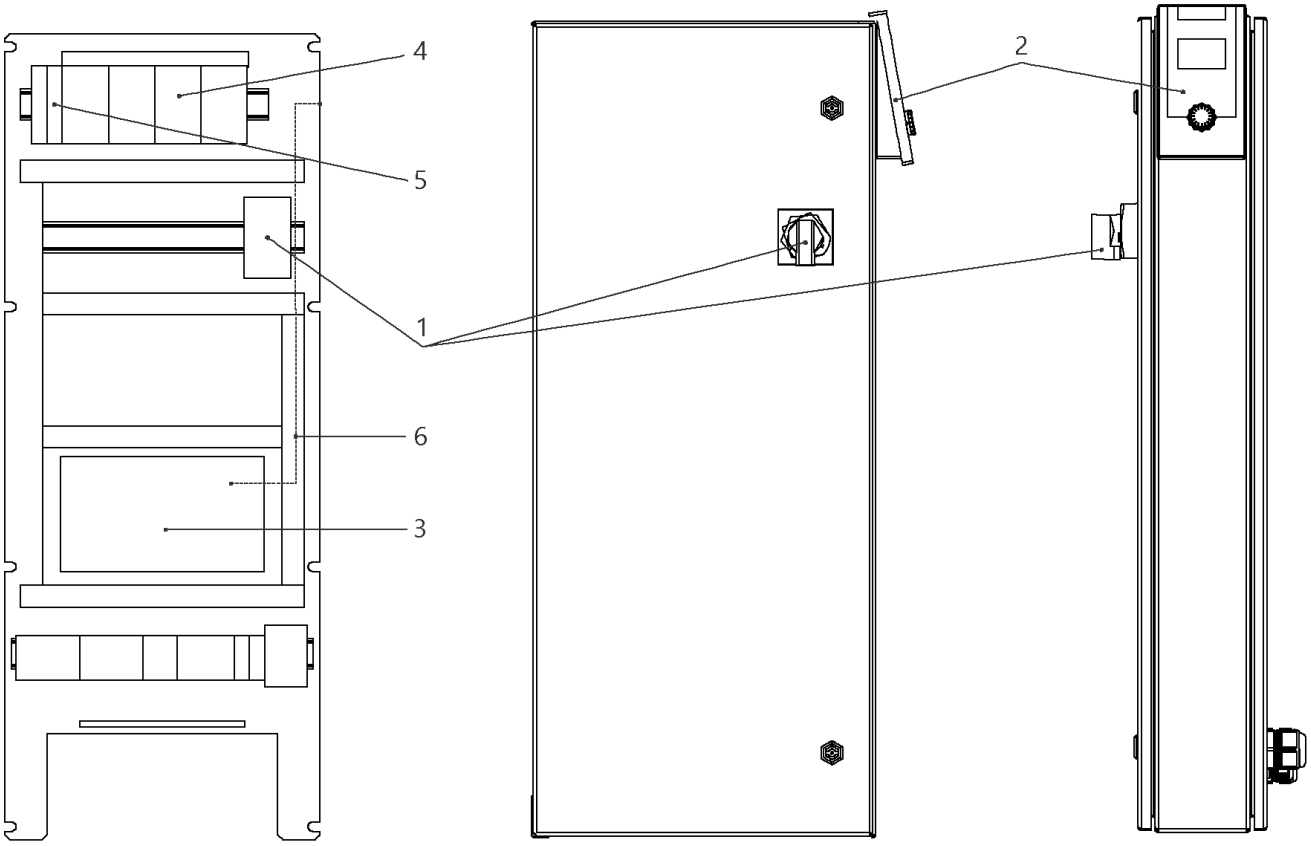
4
5
1
6
3
2

## W-CTRL-SCE-B-2x13A-T34-FM-ND2-AVC-PKG (2541905)

| Item | Article no. | Description | Quantity |
|---|---|---|---|
| 1 | 2104473 | MAIN SWITCH OT63F3 L105 KIT | 1 |
| Note: TO / BIS / JUSQU'AU 30/06/2015 | | | |
| 1 | 2104470 | MAIN SWITCH OT40F3 L250 KIT | 1 |
| Note: FROM / AB / À PARTIR DU 01/07/2015 | | | |
| 2 | 4184784 | CONTROL PANEL HMI SC KIT | 1 |
| 2 | 4185259 | ASSEMBLY DISPLAY SC PKG VP. | 1 |
| Note: DISPLAY ALONE / PLATINE SEULE | | | |
| 3 | 4185257 | ASSEMBLY CPU SCe Booster VP. | 1 |
| 4 | 2051217 | AUTOM.CIRCUIT BREAKER S203 B16 TO7,5kW | 1 |
| 5 | 2046288 | CIRCUIT BREAKER S201 B16 | 1 |
| 6 | 4194956 | PATCH CABLE RJ45 CAT6 1,0M BLUE SC-PANEL | 1 |

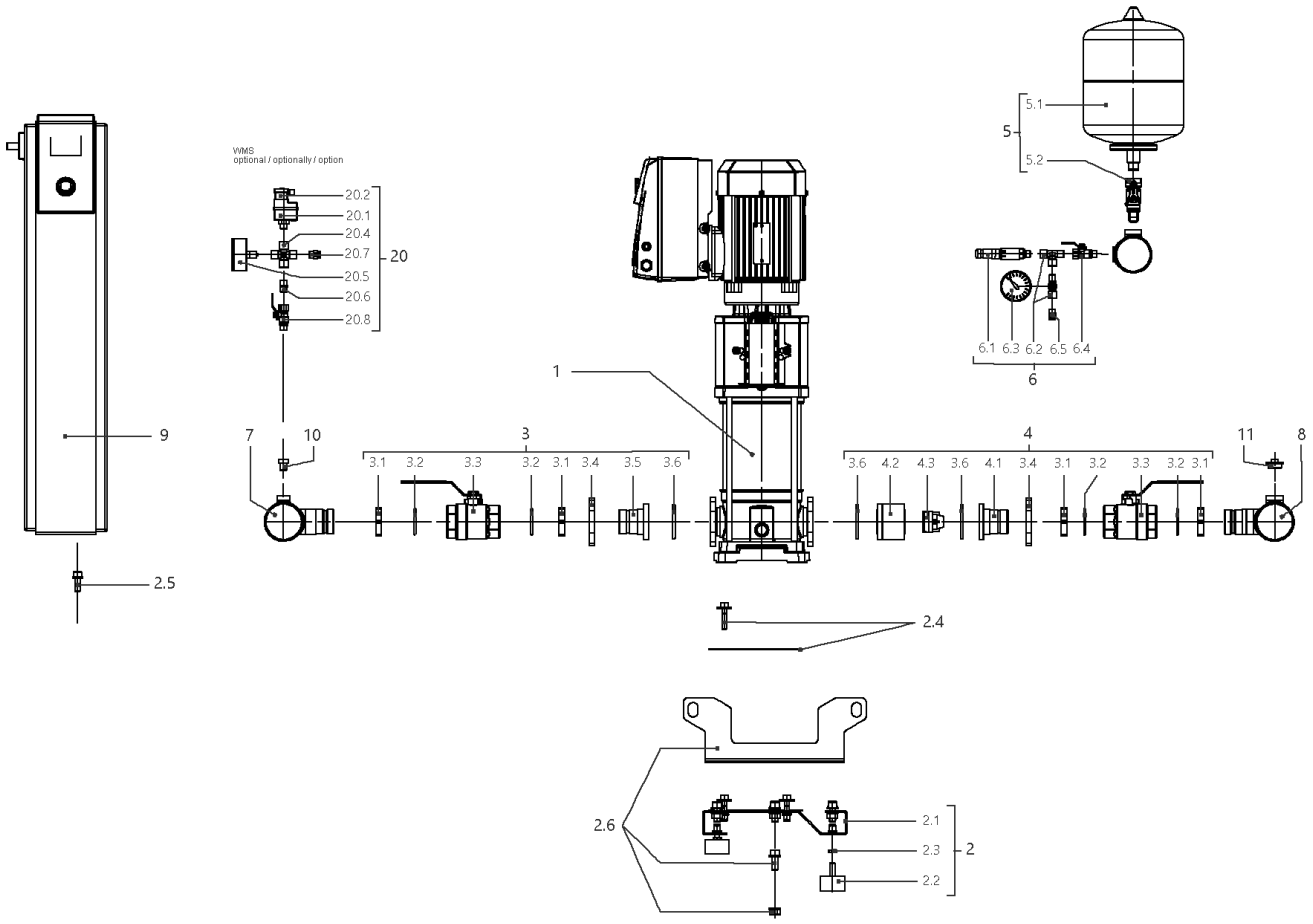
VVMS
optional / optionally / option
20.2
20.1
20.4
20.7
20.5
20.6
20.8
20
5.1
5
5.2
6.1 6.3 6.2 6.5 6.4
6
1
9
7
10
3
3.1 3.2 3.3 3.2 3.1 3.4 3.5 3.6
4
3.6 4.2 4.3 3.6 4.1 3.4 3.1 3.2 3.3 3.2 3.1
11
8
2.5
2.4
2.6
2.1
2.3
2.2
2

## SiBoost Smart 2HELIX VE1605 (2536335)

| Item | Article no. | Description | Quantity |
|---|---|---|---|
| 1 | | HELIX VE1605-1/16/E/KS/FF240/EC | 1 |
| 2 | 4197125 | BASE PLATE DE2 850x420 KIT | 1 |
| 2.1 | | > BASEPLATE_2x4/6/10/16V_E300_BOX_150 | 1 |
| 2.2 | 2028654 | > VIBRATION DAMPER D.50X30 M10X28 | 1 |
| 2.3 | 2028281 | > NUT M10 DIN936 (ISO4035) 17H VZ | 1 |
| 2.4 | 4197083 | > HOLDER PUMP Helix 10/16 KIT | 1 |
| 2.5 | 4197084 | > HOLDER SWITCHBOX WILO Smart Control KIT | 1 |
| 2.6 | 4197117 | > LIFTING Siboost HELIX SC KIT | 1 |
| 3 | 4197072 | SUCTION SIDE Siboost Helix10/16 KIT | 1 |
| 3.1 | 2032623 | > NUT G1 1/2"SW55 MS | 1 |
| 3.2 | 2032616 | > O-RING ID.44X3,53N DIN3771 E7502 | 1 |
| 3.2 | 2534877 | > BALL TAP KDW40-H G11/2I-I-DN40 DVGW | 1 |
| 3.4 | 2032626 | > OVAL FLANGE D52-LK100 ST-VZ | 1 |
| 3.5 | 2032627 | > UNION INSERT DN40 LAPPED FLANGE | 1 |
| 3.6 | 2032628 | > O-RING ID.56,52X5,33N DIN3771 E7502 | 1 |
| 4 | 4197829 | DELIVERY SIDE Siboost Helix V16 KIT | 1 |
| 3.1 | 2032623 | > NUT G1 1/2"SW55 MS | 1 |
| 3.2 | 2032616 | > O-RING ID.44X3,53N DIN3771 E7502 | 1 |
| 3.3 | 2534877 | > BALL TAP KDW40-H G11/2I-I-DN40 DVGW | 1 |
| 3.4 | 2032626 | > OVAL FLANGE D52-LK100 ST-VZ | 1 |
| 4.1 | 2054274 | > UNION INSERT DN40 LAPPED FLANGE(W.COLLAR | 1 |
| 4.2 | 2054270 | > HOUSING RFV(RV-IN) DN50 MS VP. | 1 |
| 4.3 | 2028284 | > NON-RETURN DEVICE UNIT NV50/DN50 VP. | 1 |
| 3.6 | 2032628 | > O-RING ID.56,52X5,33N DIN3771 E7502 | 1 |
| 5 | 2032642 | DIAPHREM TANK 8L/PN16 DIN4807/T5 KIT | 1 |
| 5.1 | 2045914 | > DIAPHREM TANK 8L TYP-DD 16BAR | 1 |
| 5.2 | 2027853 | > FLOW FITTING G3/4 FOR DIAPHRAGM VES. | 1 |
| 6 | 4197076 | PRESSURE SENSOR/ GAUGE 0-16BAR KIT | 1 |
| 6.1 | 2085909 | > PRESS.SENSOR 1/4" 0-16BAR 4-20MA VP. | 1 |
| 6.2 | 4197077 | > T-PIECE 1/4" VP. | 1 |
| 6.3 | 2028692 | > PRESSURE GAUGE NG63-PN16-G1/4 | 1 |
| 6.4 | 2028291 | > BALL TAP R1/4" PN42 GIACOMINI R254DL | 1 |
| 6.5 | 2028691 | > BLOWGUN 1/4" MS 30BAR VP. | 1 |
| 7 | 4197830 | PIPE DE2 3''-2x11/2"+1x1/4x600 VP. | 1 |

| Item | Article no. | Description | Quantity |
|---|---|---|---|
| 8 | 4197831 | PIPE DE2 3''-2x11/2"+1x1/4+1x3/4x600 VP. | 1 |
| 9 | | W-CTRL-SCE-B-2x5,5KW-T4-FM-ND2 | 1 |
| Note: TO / BIS / JUSQU'AU 18/05/2014 | | | |
| 9 | 2541905 | W-CTRL-SCE-B-2x13A-T34-FM-ND2-AVC-PKG | 1 |
| Note: FROM / AB / À PARTIR DU 19/05/2014 | | | |
| 10 | 4197079 | PLUG G1/4"x10 AISI304 KIT | 1 |
| 11 | 2032654 | PLUG R3/4" MS VIEGA 1751 | 1 |
| 20 | 2521150 | ASSEMBLY WMS. DE-EB. +VP | 1 |
| 20.1 | 2028652 | > PRESSURE SWITCH PS3-ASR 1/(1,3) VP. | 1 |
| 20.2 | 2130983 | > PLUG PS3-415 WITH KABEL 1,5M 2NO VP. | 1 |
| 20.4 | 2028290 | > CROSSPIECE R1/4" MS-NICKEL | 1 |
| 20.5 | 2028687 | > PRESSURE GAUGE NG63 R1/4" HI.0-6BAR | 1 |
| 20.6 | 2054268 | > DUAL NIPPLE G1/4" x G1/4" MS VP. | 1 |
| 20.7 | 2028691 | > BLOWGUN 1/4" MS 30BAR VP. | 1 |
| 20.8 | 2028291 | > BALL TAP R1/4" PN42 GIACOMINI R254DL | 1 |

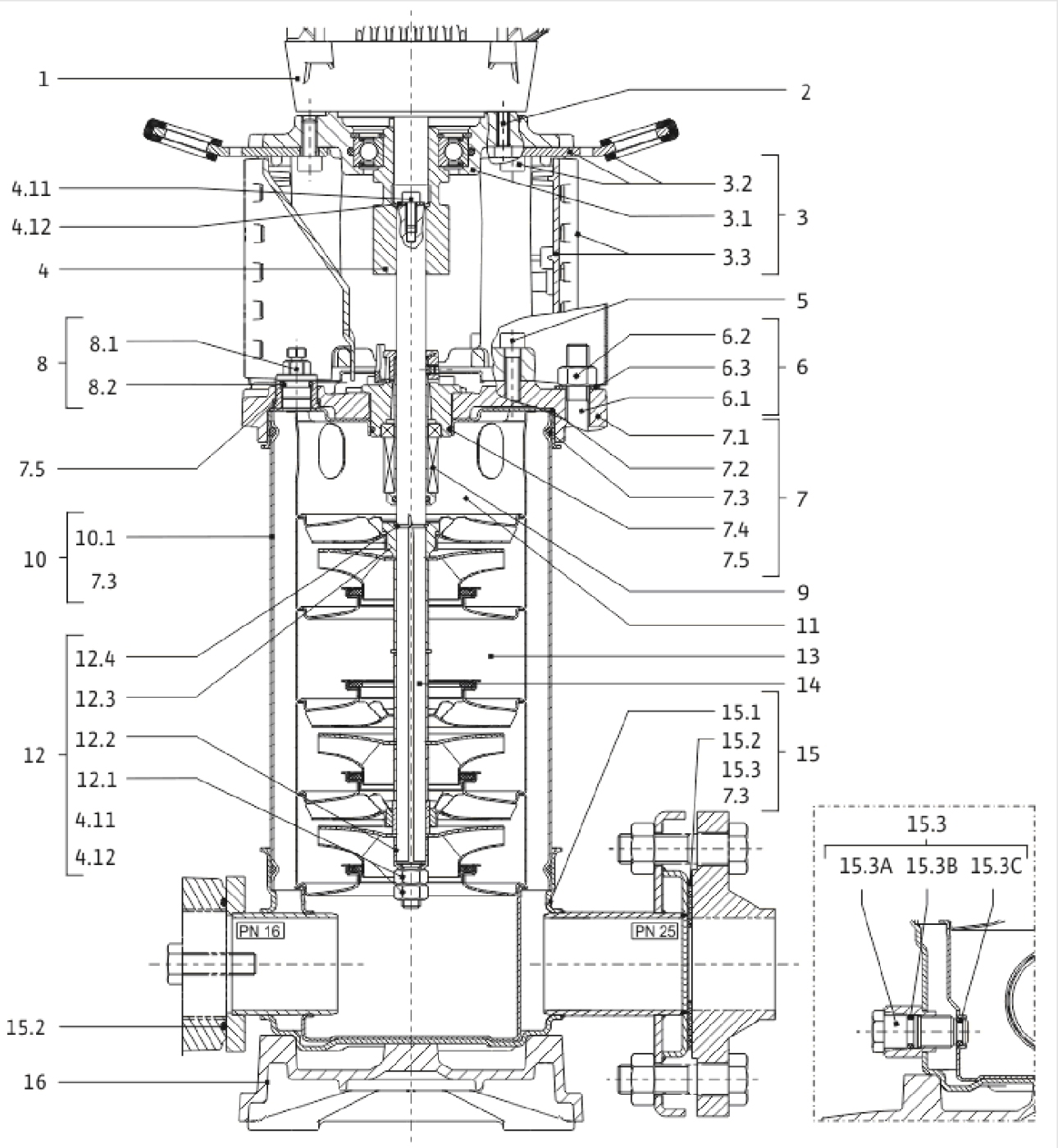
1
2
4.11
4.12
4
3.2
3.1
3.3
3
5
8
8.1
8.2
6.2
6.3
6.1
6
7.5
7.1
7.2
7.3
7.4
7.5
7
10
10.1
7.3
9
11
12
12.4
12.3
12.2
12.1
4.11
4.12
13
14
15.1
15.2
15.3
7.3
15
PN 16
PN 25
15.2
16
15.3
15.3A
15.3B
15.3C

| Item | Article no. | Description | Quantity |
|---|---|---|---|
| 1 | | DRIVE HELIX-VE1605-FF24-IE2-ATB KIT | 1 |
| Note: MOTOR BRAND ATB | | | |
| 2 | 4174093 | SCREW M12X50 (4 PIECES) | 1 |
| 3 | 4197828 | LANTERN FF240 HELIX KIT | 1 |
| 3.1 | | > LANTERN FF240 M+6" JL250 MACHINING+CATA | 1 |
| 3.2 | 4186346 | > EYELET CPL.FF240 HELIX (4 PIECES) | 1 |
| 3.3 | 4159695 | > COUPLING PROTECTOR FF HELIX KIT | 1 |
| 4 | 4159711 | COUPLING D.16XD.38 FF265 HELIX KIT | 1 |
| 5 | 4159707 | SCREW M8X30 (4 PIECES) | 1 |
| 6 | 2127554 | STUD BOLT M12X437 KIT | 1 |
| 7 | 4159685 | END SHIELD HELIX EPDM KIT | 1 |
| 7.1 | | > END SHIELD M+6" GJL250 MACHINING+CATA | 1 |
| 7.2 | 2127607 | > STATIONARY RING HOLDER 6" HELIX 1.4301 V | 1 |
| 7.3 | 4176513 | > O-RING FOR PUMP JACKET VP. | 1 |
| 7.4 | 2127603 | > O-RING ID.37,6x2,4 EPDM VP. | 1 |
| 7.5 | 2127602 | > O-RING ID.21,35x2 EPDM VP. | 1 |
| 8 | 4159686 | FILING/PURGING PLUG HELIX EPDM KIT | 1 |
| 9 | 4159696 | CARTRIDGE HELIX6-10-16 O/E KIT | 1 |
| 10 | 2127577 | HOUSING PIPE D.152x310 1.4301 KIT | 1 |
| 11 | 2127588 | CENTERING STAGE-RETURN HELIX16 1.4301 VP | 1 |
| 12 | 4159688 | SHAFT EQUIPMENT HELIX V16 BI BLOC KIT | 1 |
| 4.11 | 4102901 | > SCREW CHC-M6X14-8.8-ISO4762-GEOMET500A | 1 |
| 4.12 | 2130995 | > SERRATED LOCK WASHER D.6,2XD.14,5X28 VP. | 1 |
| 12.1 | | > NUT-H-M10-A4.70 | 1 |
| 12.2 | | > SERRATED LOCK WASHER M+16M3-316L | 1 |
| 12.3 | | > STOP COLLAR OF IMPELLER L18,8-Ø16-316L | 1 |
| 12.4 | | > STOP-RUSH-1/2-D16xd2-M+316 | 1 |
| 13 | | HYDRAULIC HELIX V 1605 1.4307 | 1 |
| 14 | 2127566 | SHAFT D.16X430 1.4301 VP. | 1 |
| 15 | 4217899 | PUMP HOUSING HELIX DN50 PN16 1.4301 KIT | 1 |
| 7.3 | 4176513 | > O-RING FOR PUMP JACKET VP. | 1 |
| 15.1 | | > BLASTING PPE HOUSING V-PN16-DN50-304 | 1 |
| 15.2 | 4217895 | > COUNTER FLANGE-G2"-PN16-GJL KIT | 1 |
| 15.3 | 4171321 | > PRIMING/DRAIN PLUG EPDM HELIX KIT | 1 |

| Item | Article no. | Description | Quantity |
|---|---|---|---|
| 16 | 2127601 | BASEPLATE HELIX V16 VP. | 1 |

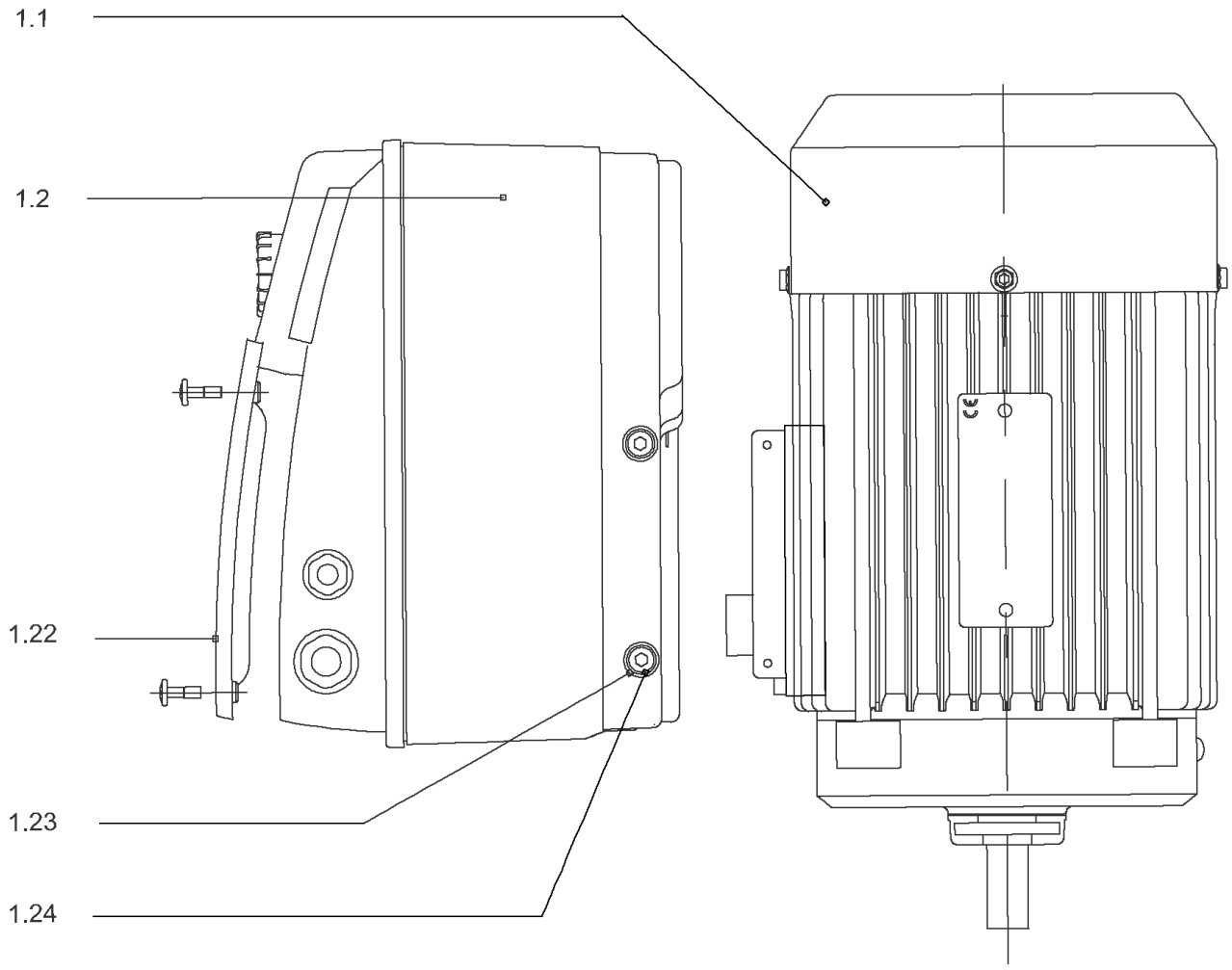
1.1
1.2
1.22
1.23
1.24

## DRIVE HELIX-VE1605-FF24-IE2-ATB KIT

| Item | Article no. | Description | Quantity |
|---|---|---|---|
| 1.1 | | MOTOR 5,5/2/132 FF240 3~380V 60HZ IE2 VP | 1 |
| Note: no longer available/nicht mehrlieferbar/n'est plus disponible | | | |
| | | SPARE PARTS MOTOR:ON REQUEST | 1 |
| 1.2 | 4184971 | MODULE HELIX-VE1605-IE2-ATB KIT | 1 |
| 1.22 | 2111344 | > MODULE COVER/GASKET TL5 KIT | 1 |
| 1.23 | 4215716 | > SCREW M5X16 DIN912 8.8 A2A (4pieces) VP. | 1 |
| 1.24 | 2057978 | > RONDELLE A5,3 DIN6797 FST ZN (4 PIECES) | 1 |

## COUPLING D.16XD.38 FF265 HELIX KIT (4159711)

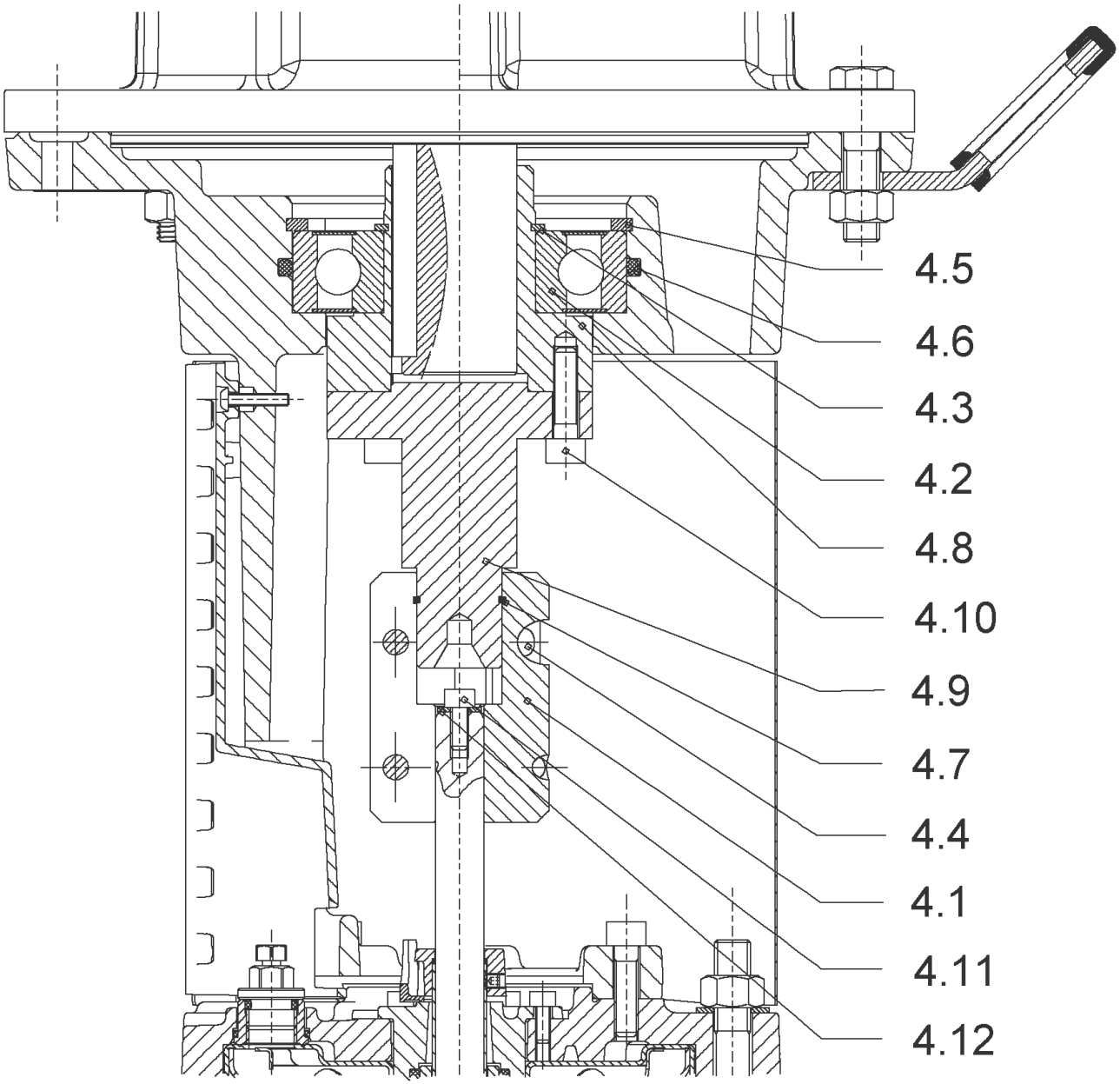

## COUPLING D.16XD.38 FF265 HELIX KIT (4159711)

| Item | Article no. | Description | Quantity |
|---|---|---|---|
| 4.1 | 2131018 | COUPLING 2 PARTS D.16XD.28XL.82,4 VP. | 1 |
| 4.2 | 2131017 | BALL BEARING 6310/ZZ-C4(HT)VP. | 1 |
| 4.3 | 4234253 | CIRCLIP-FOR-SHAFT-D50x2 VP. | 1 |
| 4.4 | 4157726 | SCREW KIT M8X30 (4 PIECES) | 1 |
| 4.5 | 4234255 | CIRCLIPS 110X4 VP. | 1 |
| 4.6 | 4233944 | O-RING ID.110 VP. | 1 |
| 4.7 | 2131019 | RETAINING RING D.26xD.2 DIN7993 VP. | 1 |
| 4.10 | 4157726 | SCREW KIT M8X30 (4 PIECES) | 1 |
| 4.11 | 4102901 | SCREW CHC-M6X14-8.8-ISO4762-GEOMET500A | 1 |
| 4.12 | 2130995 | SERRATED LOCK WASHER D.6,2XD.14,5X28 VP. | 1 |
| | | NOMEL CONTACT WASHER 8x16x1,4 STEEL ZC | 1 |
| 4.8 | 2131020 | HUB D.38XD.50 VP. | 1 |
| 4.9 | 2131021 | SPACER D.28XD.45 VP. | 1 |

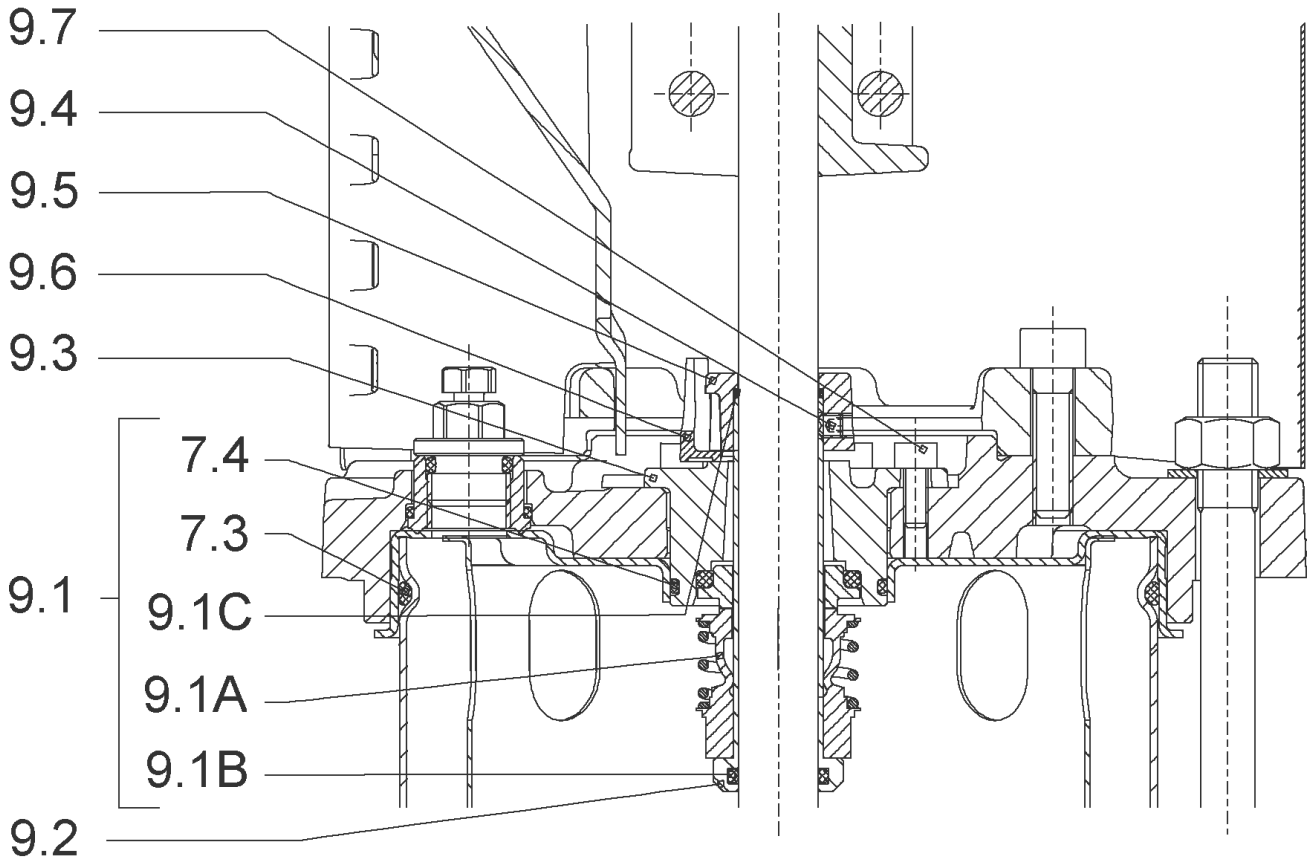
9.7
9.4
9.5
9.6
9.3
7.4
7.3
9.1
9.1C
9.1A
9.1B
9.2

## CARTRIDGE HELIX6-10-16 O/E KIT (4159696)

| Item | Article no. | Description | Quantity |
|---|---|---|---|
| 9.1 | 4159697 | SEAL-KIT-HELIX6-10-16 O/E | 1 |
| 7.3 | 4176513 | > O-RING FOR PUMP JACKET VP. | 1 |
| 7.4 | 2127603 | > O-RING ID.37,6x2,4 EPDM VP. | 1 |
| 9.1A | 2130966 | > MECH.SEAL HELIX2-4-6-10-16 O/E VP. | 1 |
| 9.1B | 2130967 | > O-RING D.16X2,5 EPDM VP. | 1 |
| 9.1C | 4176519 | > O-RING Ø16xØ1.25 VP. | 1 |
| 9.2 | 2130961 | SHAFT SLEEVE D.18/16X72,2 1.4404 VP. | 1 |
| 9.3 | 2130962 | RING HOLDER D.18 G606/G6 1.4301 VP. | 1 |
| 9.4 | 4176520 | SCREW CH M5x5 A4-70 ( 3PIECES ) | 1 |
| 9.5 | 2130963 | DRIVE RING D.29/18x12,4 MACH.VP. | 1 |
| 9.6 | 2130964 | TOOL M.S.CART.HELIX VP. | 1 |
| 9.7 | 2130965 | SCREW CHC M5X12 ISO4762 A2.70(4 PIECES) | 1 |

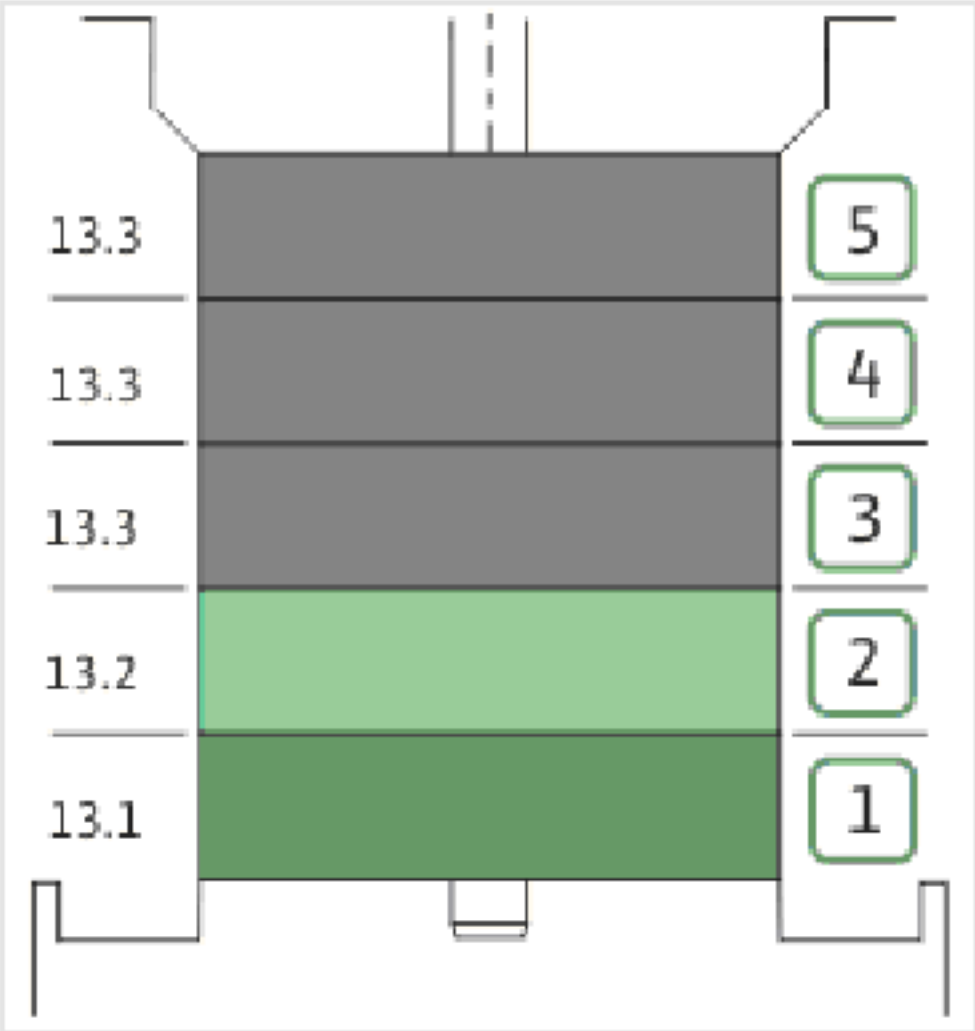
13.3
13.3
13.3
13.2
13.1
5
4
3
2
1

| Item | Article no. | Description | Quantity |
|---|---|---|---|
| 13.1 | 4159720 | STAGE HELIX 16 1.4301 KIT | 1 |
| | | > MACH.STG-CASING-WOGV-WNR-M+16-304 | 1 |
| | | > IMPELLER-M+16-304 | 1 |
| 13.2 | 4159714 | STAGE BEARING HELIX 16 1.4301 KIT | 1 |
| | | > MACH.BEARING-STG-CASING-WNR-M+16-304 | 1 |
| | | > IMPELLER-M+16-304 | 1 |
| | | > SLEEVE-SPACER-Ø19,35x30,665-304 | 1 |
| | | > SHAFT-SLEEVE-D16xD20x18-CW | 1 |
| 13.3 | 4159715 | INTERMEDIATE STAGE HELIX 16 1.4301 KIT | 1 |
| | | > CORPS-ETG-STD-ACR-AJR-USIN.M+16-304 | 1 |
| | | > IMPELLER-M+16-304 | 1 |
| | | > SPACER Ø16X19.4-L48.6-304 | 1 |

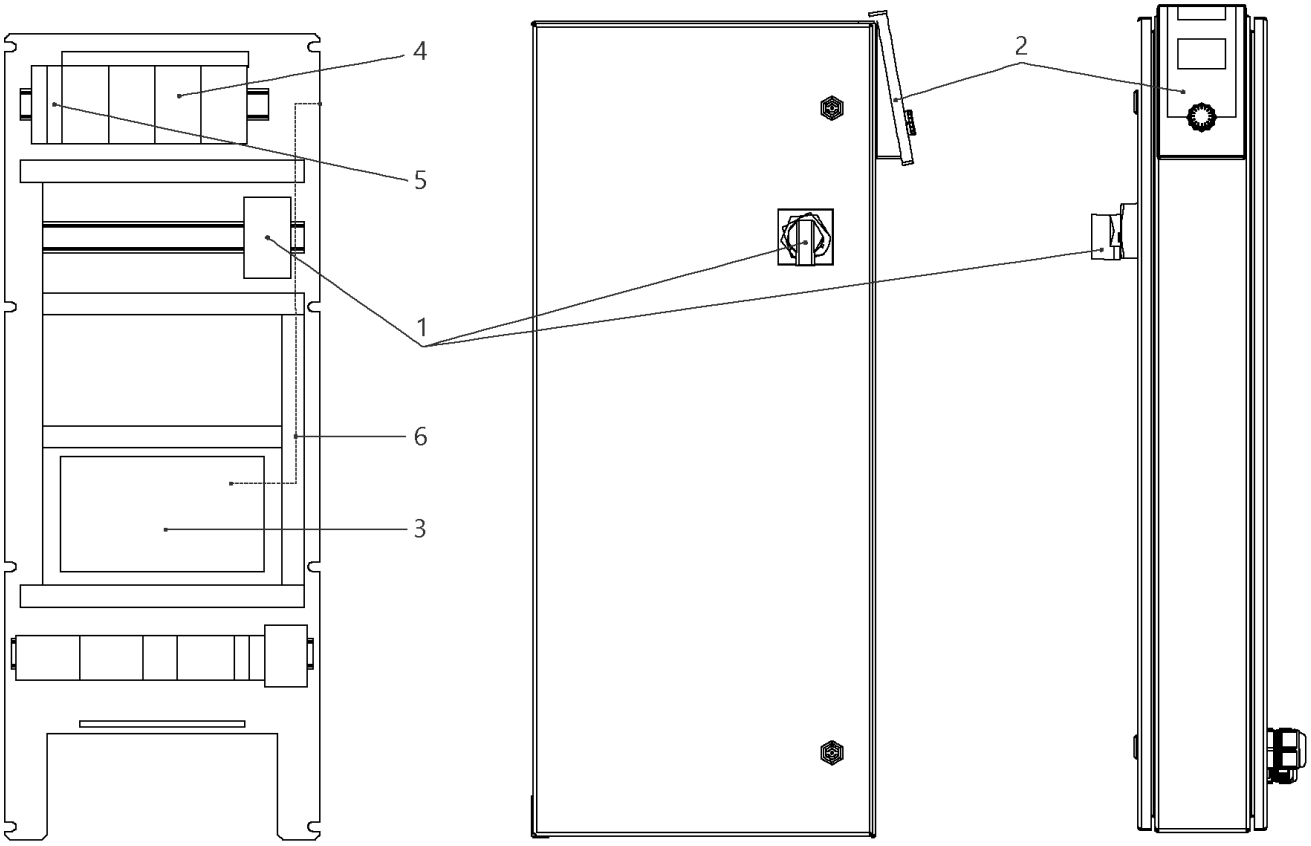
4
5
1
6
3
2

## W-CTRL-SCE-B-2x5,5KW-T4-FM-ND2

| Item | Article no. | Description | Quantity |
|---|---|---|---|
| 1 | 2104470 | MAIN SWITCH OT40F3 L250 KIT | 1 |
| 2 | 4184784 | CONTROL PANEL HMI SC KIT | 1 |
| 2 | 4185259 | ASSEMBLY DISPLAY SC PKG VP. | 1 |
| 3 | 4185257 | ASSEMBLY CPU SCe Booster VP. | 1 |
| 4 | 2051217 | AUTOM.CIRCUIT BREAKER S203 B16 TO7,5kW | 1 |
| 5 | 2046288 | CIRCUIT BREAKER S201 B16 | 1 |
| 6 | 4194956 | PATCH CABLE RJ45 CAT6 1,0M BLUE SC-PANEL | 1 |

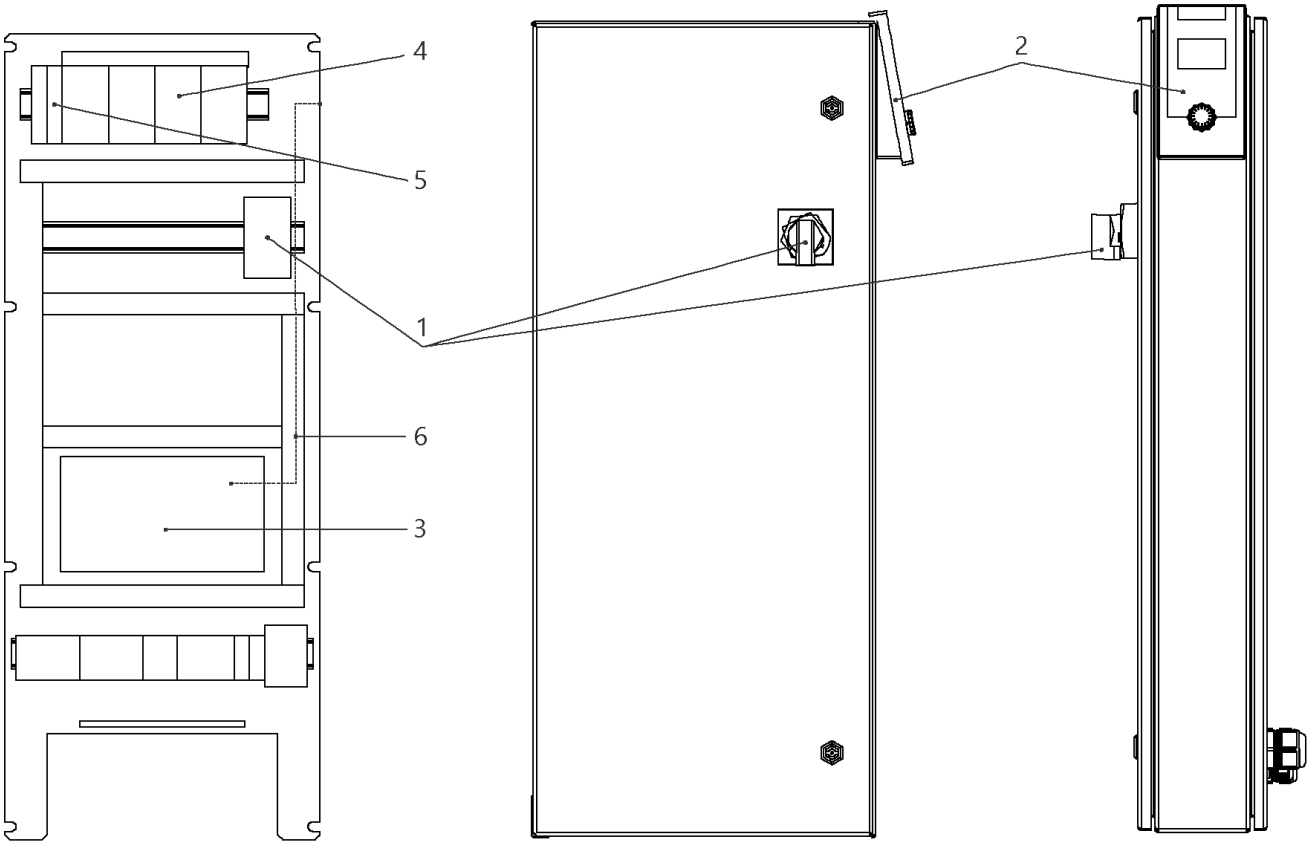
4
5
1
6
3
2

## W-CTRL-SCE-B-2x13A-T34-FM-ND2-AVC-PKG (2541905)

| Item | Article no. | Description | Quantity |
|---|---|---|---|
| 1 | 2104473 | MAIN SWITCH OT63F3 L105 KIT | 1 |
| Note: TO / BIS / JUSQU'AU 30/06/2015 | | | |
| 1 | 2104470 | MAIN SWITCH OT40F3 L250 KIT | 1 |
| Note: FROM / AB / À PARTIR DU 01/07/2015 | | | |
| 2 | 4184784 | CONTROL PANEL HMI SC KIT | 1 |
| 2 | 4185259 | ASSEMBLY DISPLAY SC PKG VP. | 1 |
| Note: DISPLAY ALONE / PLATINE SEULE | | | |
| 3 | 4185257 | ASSEMBLY CPU SCe Booster VP. | 1 |
| 4 | 2051217 | AUTOM.CIRCUIT BREAKER S203 B16 TO7,5kW | 1 |
| 5 | 2046288 | CIRCUIT BREAKER S201 B16 | 1 |
| 6 | 4194956 | PATCH CABLE RJ45 CAT6 1,0M BLUE SC-PANEL | 1 |

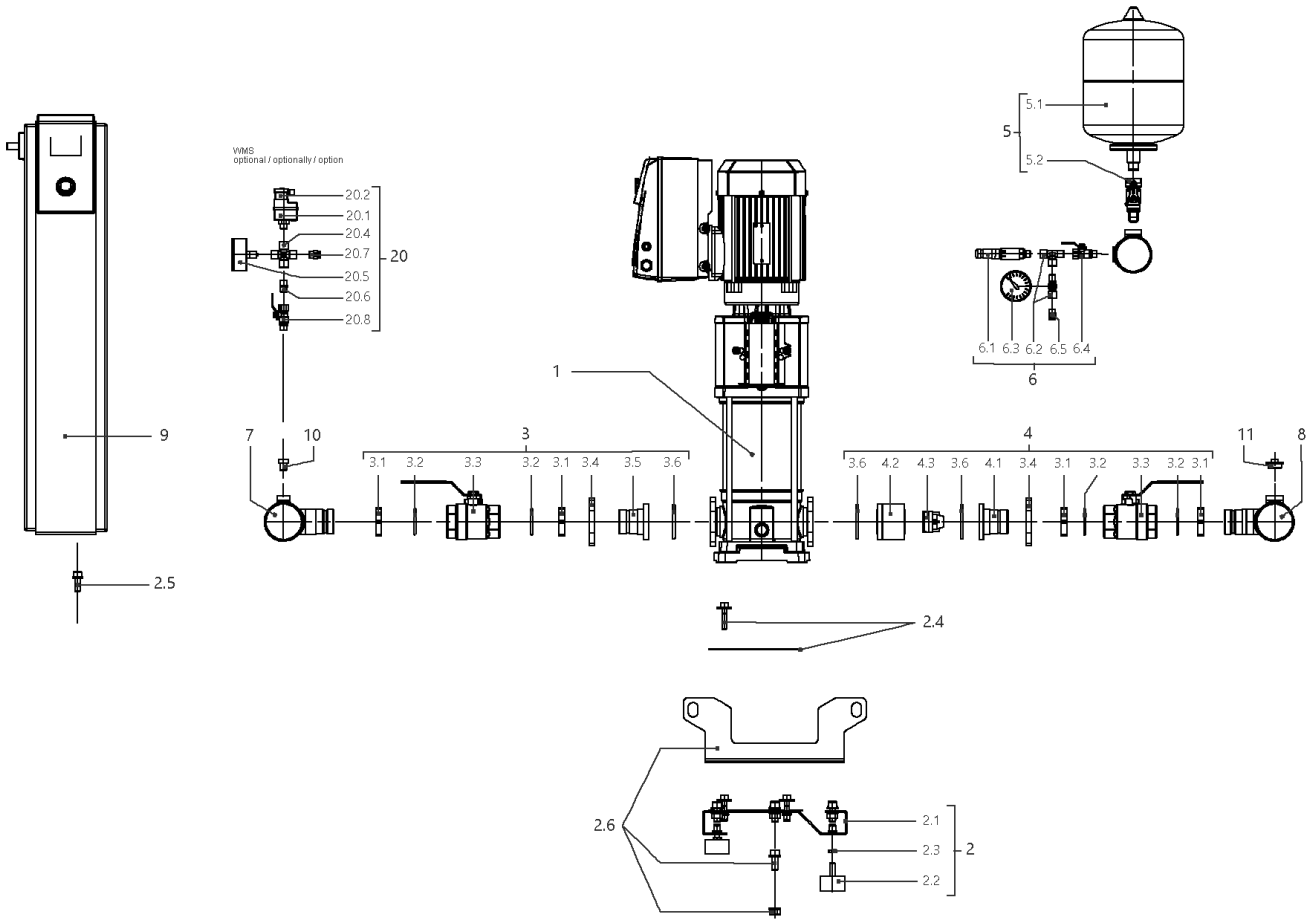
VVMS
optional / optionally / option
20.2
20.1
20.4
20.7
20.5
20.6
20.8
20
5.1
5
5.2
6.1 6.3 6.2 6.5 6.4
6
1
9
7
10
3
3.1 3.2 3.3 3.2 3.1 3.4 3.5 3.6
4
3.6 4.2 4.3 3.6 4.1 3.4 3.1 3.2 3.3 3.2 3.1
11
8
2.5
2.4
2.6
2.1
2.3
2.2
2

## SiBoost Smart 2HELIX VE1606 (2536336)

| Item | Article no. | Description | Quantity |
|---|---|---|---|
| 1 | | HELIX VE1606-1/16/E/KS/FF240/EC | 1 |
| 2 | 4197125 | BASE PLATE DE2 850x420 KIT | 1 |
| 2.1 | | > BASEPLATE_2x4/6/10/16V_E300_BOX_150 | 1 |
| 2.2 | 2028654 | > VIBRATION DAMPER D.50X30 M10X28 | 1 |
| 2.3 | 2028281 | > NUT M10 DIN936 (ISO4035) 17H VZ | 1 |
| 2.4 | 4197083 | > HOLDER PUMP Helix 10/16 KIT | 1 |
| 2.5 | 4197084 | > HOLDER SWITCHBOX WILO Smart Control KIT | 1 |
| 2.6 | 4197117 | > LIFTING Siboost HELIX SC KIT | 1 |
| 3 | 4197072 | SUCTION SIDE Siboost Helix10/16 KIT | 1 |
| 3.1 | 2032623 | > NUT G1 1/2"SW55 MS | 1 |
| 3.2 | 2032616 | > O-RING ID.44X3,53N DIN3771 E7502 | 1 |
| 3.2 | 2534877 | > BALL TAP KDW40-H G11/2I-I-DN40 DVGW | 1 |
| 3.4 | 2032626 | > OVAL FLANGE D52-LK100 ST-VZ | 1 |
| 3.5 | 2032627 | > UNION INSERT DN40 LAPPED FLANGE | 1 |
| 3.6 | 2032628 | > O-RING ID.56,52X5,33N DIN3771 E7502 | 1 |
| 4 | 4197829 | DELIVERY SIDE Siboost Helix V16 KIT | 1 |
| 3.1 | 2032623 | > NUT G1 1/2"SW55 MS | 1 |
| 3.2 | 2032616 | > O-RING ID.44X3,53N DIN3771 E7502 | 1 |
| 3.3 | 2534877 | > BALL TAP KDW40-H G11/2I-I-DN40 DVGW | 1 |
| 3.4 | 2032626 | > OVAL FLANGE D52-LK100 ST-VZ | 1 |
| 4.1 | 2054274 | > UNION INSERT DN40 LAPPED FLANGE(W.COLLAR | 1 |
| 4.2 | 2054270 | > HOUSING RFV(RV-IN) DN50 MS VP. | 1 |
| 4.3 | 2028284 | > NON-RETURN DEVICE UNIT NV50/DN50 VP. | 1 |
| 3.6 | 2032628 | > O-RING ID.56,52X5,33N DIN3771 E7502 | 1 |
| 5 | 2032642 | DIAPHREM TANK 8L/PN16 DIN4807/T5 KIT | 1 |
| 5.1 | 2045914 | > DIAPHREM TANK 8L TYP-DD 16BAR | 1 |
| 5.2 | 2027853 | > FLOW FITTING G3/4 FOR DIAPHRAGM VES. | 1 |
| 6 | 4197076 | PRESSURE SENSOR/ GAUGE 0-16BAR KIT | 1 |
| 6.1 | 2085909 | > PRESS.SENSOR 1/4" 0-16BAR 4-20MA VP. | 1 |
| 6.2 | 4197077 | > T-PIECE 1/4" VP. | 1 |
| 6.3 | 2028692 | > PRESSURE GAUGE NG63-PN16-G1/4 | 1 |
| 6.4 | 2028291 | > BALL TAP R1/4" PN42 GIACOMINI R254DL | 1 |
| 6.5 | 2028691 | > BLOWGUN 1/4" MS 30BAR VP. | 1 |
| 7 | 4197830 | PIPE DE2 3''-2x11/2"+1x1/4x600 VP. | 1 |

| Item | Article no. | Description | Quantity |
|---|---|---|---|
| 8 | 4197831 | PIPE DE2 3''-2x11/2"+1x1/4+1x3/4x600 VP. | 1 |
| 9 | | W-CTRL-SCE-B-2x7,5KW-T4-FM-ND2 | 1 |
| Note: TO / BIS / JUSQU'AU 18/05/2014 | | | |
| 9 | 2542075 | W-CTRL-SCE-B-2x16A-T34-FM-ND2-AVC-PKG | 1 |
| Note: FROM / AB / À PARTIR DU 19/05/2014 | | | |
| 10 | 4197079 | PLUG G1/4"x10 AISI304 KIT | 1 |
| 11 | 2032654 | PLUG R3/4" MS VIEGA 1751 | 1 |
| 20 | 2521150 | ASSEMBLY WMS. DE-EB. +VP | 1 |
| 20.1 | 2028652 | > PRESSURE SWITCH PS3-ASR 1/(1,3) VP. | 1 |
| 20.2 | 2130983 | > PLUG PS3-415 WITH KABEL 1,5M 2NO VP. | 1 |
| 20.4 | 2028290 | > CROSSPIECE R1/4" MS-NICKEL | 1 |
| 20.5 | 2028687 | > PRESSURE GAUGE NG63 R1/4" HI.0-6BAR | 1 |
| 20.6 | 2054268 | > DUAL NIPPLE G1/4" x G1/4" MS VP. | 1 |
| 20.7 | 2028691 | > BLOWGUN 1/4" MS 30BAR VP. | 1 |
| 20.8 | 2028291 | > BALL TAP R1/4" PN42 GIACOMINI R254DL | 1 |

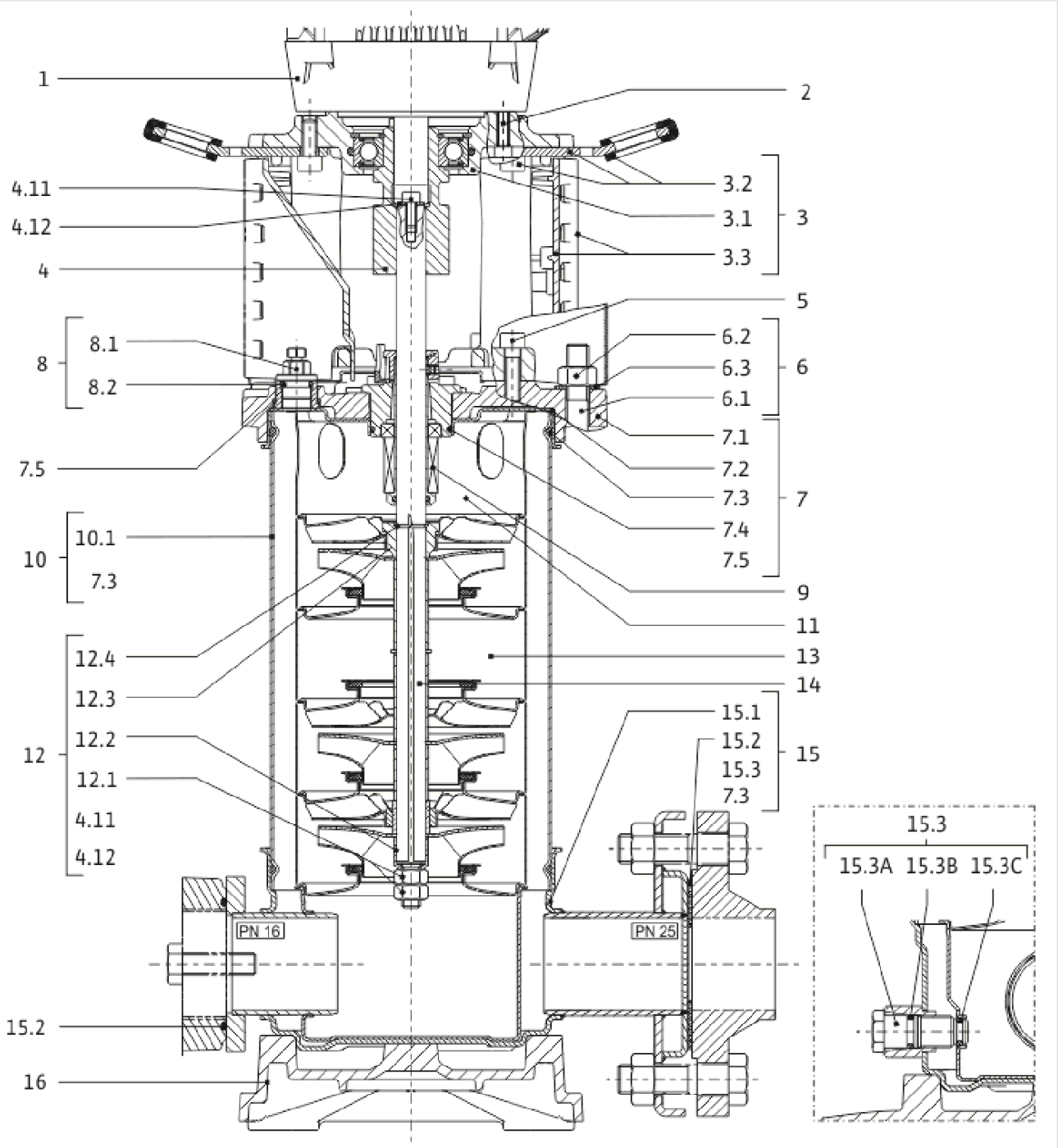
1
2
4.11
4.12
4
3.2
3.1
3.3
3
5
8
8.1
8.2
6.2
6.3
6.1
6
7.5
7.1
7.2
7.3
7.4
7.5
7
10
10.1
7.3
9
11
12
12.4
12.3
12.2
12.1
4.11
4.12
13
14
15.1
15.2
15.3
7.3
15
PN 16
PN 25
15.2
16
15.3
15.3A
15.3B
15.3C

| Item | Article no. | Description | Quantity |
|---|---|---|---|
| 1 | | DRIVE HELIX-VE1606-FF24-IE2-ATB KIT | 1 |
| Note: MOTOR BRAND SIEMENS | | | |
| 2 | 4174093 | SCREW M12X50 (4 PIECES) | 1 |
| 3 | 4197828 | LANTERN FF240 HELIX KIT | 1 |
| 3.1 | | > LANTERN FF240 M+6" JL250 MACHINING+CATA | 1 |
| 3.2 | 4186346 | > EYELET CPL.FF240 HELIX (4 PIECES) | 1 |
| 3.3 | 4159695 | > COUPLING PROTECTOR FF HELIX KIT | 1 |
| 4 | 4159711 | COUPLING D.16XD.38 FF265 HELIX KIT | 1 |
| 5 | 4159707 | SCREW M8X30 (4 PIECES) | 1 |
| 6 | 2127555 | STUD BOLT M12X485 KIT | 1 |
| 7 | 4159685 | END SHIELD HELIX EPDM KIT | 1 |
| 7.1 | | > END SHIELD M+6" GJL250 MACHINING+CATA | 1 |
| 7.2 | 2127607 | > STATIONARY RING HOLDER 6" HELIX 1.4301 V | 1 |
| 7.3 | 4176513 | > O-RING FOR PUMP JACKET VP. | 1 |
| 7.4 | 2127603 | > O-RING ID.37,6x2,4 EPDM VP. | 1 |
| 7.5 | 2127602 | > O-RING ID.21,35x2 EPDM VP. | 1 |
| 8 | 4159686 | FILING/PURGING PLUG HELIX EPDM KIT | 1 |
| 9 | 4159696 | CARTRIDGE HELIX6-10-16 O/E KIT | 1 |
| 10 | 2127578 | HOUSING PIPE D.152x360 1.4307 KIT | 1 |
| 7.3 | 4176513 | > O-RING FOR PUMP JACKET VP. | 1 |
| 10.1 | | > HOUSING-PIPE Ø152-M+1008/1606-304 | 1 |
| 11 | 2127588 | CENTERING STAGE-RETURN HELIX16 1.4301 VP | 1 |
| 12 | 4159688 | SHAFT EQUIPMENT HELIX V16 BI BLOC KIT | 1 |
| 4.11 | 4102901 | > SCREW CHC-M6X14-8.8-ISO4762-GEOMET500A | 1 |
| 4.12 | 2130995 | > SERRATED LOCK WASHER D.6,2XD.14,5X28 VP. | 1 |
| 12.1 | | > NUT-H-M10-A4.70 | 1 |
| 12.2 | | > SERRATED LOCK WASHER M+16M3-316L | 1 |
| 12.3 | | > STOP COLLAR OF IMPELLER L18,8-Ø16-316L | 1 |
| 12.4 | | > STOP-RUSH-1/2-D16xd2-M+316 | 1 |
| 13 | | HYDRAULIC HELIX V 1606 1.4307 | 1 |
| 14 | 4177829 | SHAFT Ø16 X480 1.4301 VP. | 1 |
| 15 | 4217899 | PUMP HOUSING HELIX DN50 PN16 1.4301 KIT | 1 |
| 7.3 | 4176513 | > O-RING FOR PUMP JACKET VP. | 1 |
| 15.1 | | > BLASTING PPE HOUSING V-PN16-DN50-304 | 1 |

| Item | Article no. | Description | Quantity |
|---|---|---|---|
| 15.2 | 4217895 | > COUNTER FLANGE-G2"-PN16-GJL KIT | 1 |
| 15.3 | 4171321 | > PRIMING/DRAIN PLUG EPDM HELIX KIT | 1 |
| 16 | 2127601 | BASEPLATE HELIX V16 VP. | 1 |

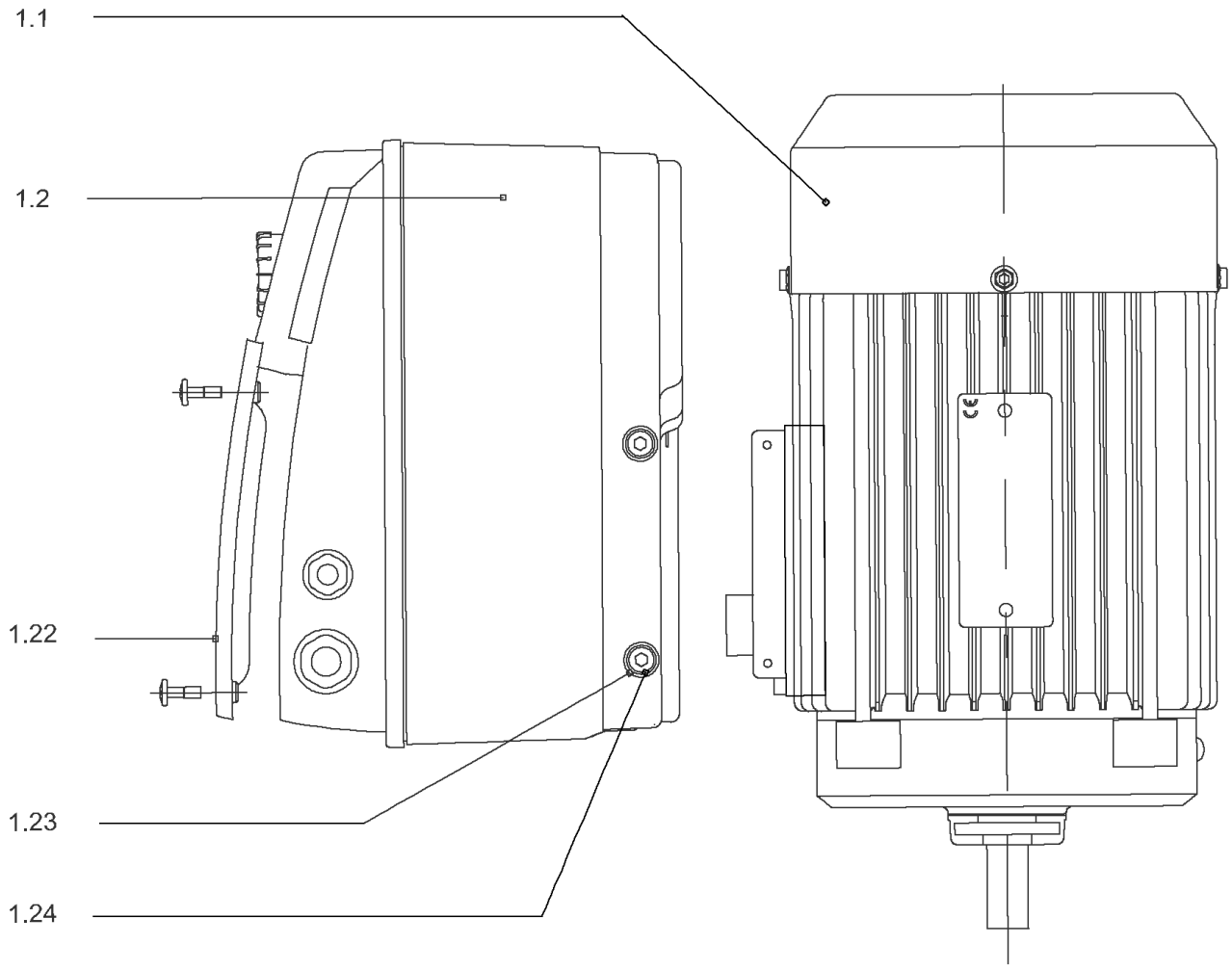
1.1
1.2
1.22
1.23
1.24

## DRIVE HELIX-VE1606-FF24-IE2-ATB KIT

| Item | Article no. | Description | Quantity |
|---|---|---|---|
| 1.1 | | MOTOR 7,5/2/132 FF240 3~380V 60HZ IE2 VP | 1 |
| Note: no longer available/nicht mehrlieferbar/n'est plus disponible | | | |
| | | SPARE PARTS MOTOR:ON REQUEST | 1 |
| 1.2 | 4193492 | MODULE HELIX-VE1606-IE2-ATB KIT | 1 |
| 1.22 | 2111344 | > MODULE COVER/GASKET TL5 KIT | 1 |
| 1.23 | 4215716 | > SCREW M5X16 DIN912 8.8 A2A (4pieces) VP. | 1 |
| 1.24 | 2057978 | > RONDELLE A5,3 DIN6797 FST ZN (4 PIECES) | 1 |

## COUPLING D.16XD.38 FF265 HELIX KIT (4159711)

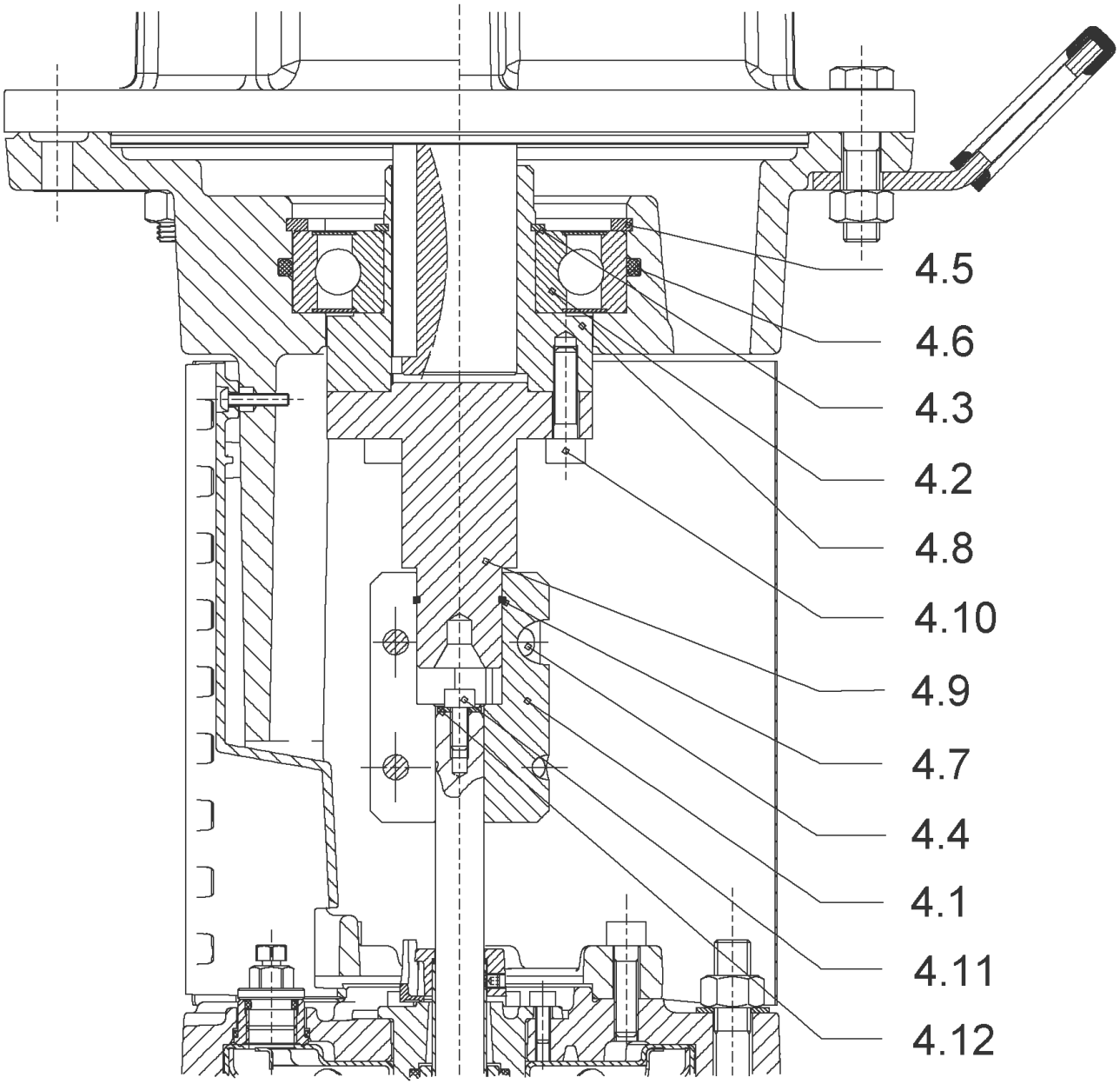

## COUPLING D.16XD.38 FF265 HELIX KIT (4159711)

| Item | Article no. | Description | Quantity |
|---|---|---|---|
| 4.1 | 2131018 | COUPLING 2 PARTS D.16XD.28XL.82,4 VP. | 1 |
| 4.2 | 2131017 | BALL BEARING 6310/ZZ-C4(HT)VP. | 1 |
| 4.3 | 4234253 | CIRCLIP-FOR-SHAFT-D50x2 VP. | 1 |
| 4.4 | 4157726 | SCREW KIT M8X30 (4 PIECES) | 1 |
| 4.5 | 4234255 | CIRCLIPS 110X4 VP. | 1 |
| 4.6 | 4233944 | O-RING ID.110 VP. | 1 |
| 4.7 | 2131019 | RETAINING RING D.26xD.2 DIN7993 VP. | 1 |
| 4.10 | 4157726 | SCREW KIT M8X30 (4 PIECES) | 1 |
| 4.11 | 4102901 | SCREW CHC-M6X14-8.8-ISO4762-GEOMET500A | 1 |
| 4.12 | 2130995 | SERRATED LOCK WASHER D.6,2XD.14,5X28 VP. | 1 |
| | | NOMEL CONTACT WASHER 8x16x1,4 STEEL ZC | 1 |
| 4.8 | 2131020 | HUB D.38XD.50 VP. | 1 |
| 4.9 | 2131021 | SPACER D.28XD.45 VP. | 1 |

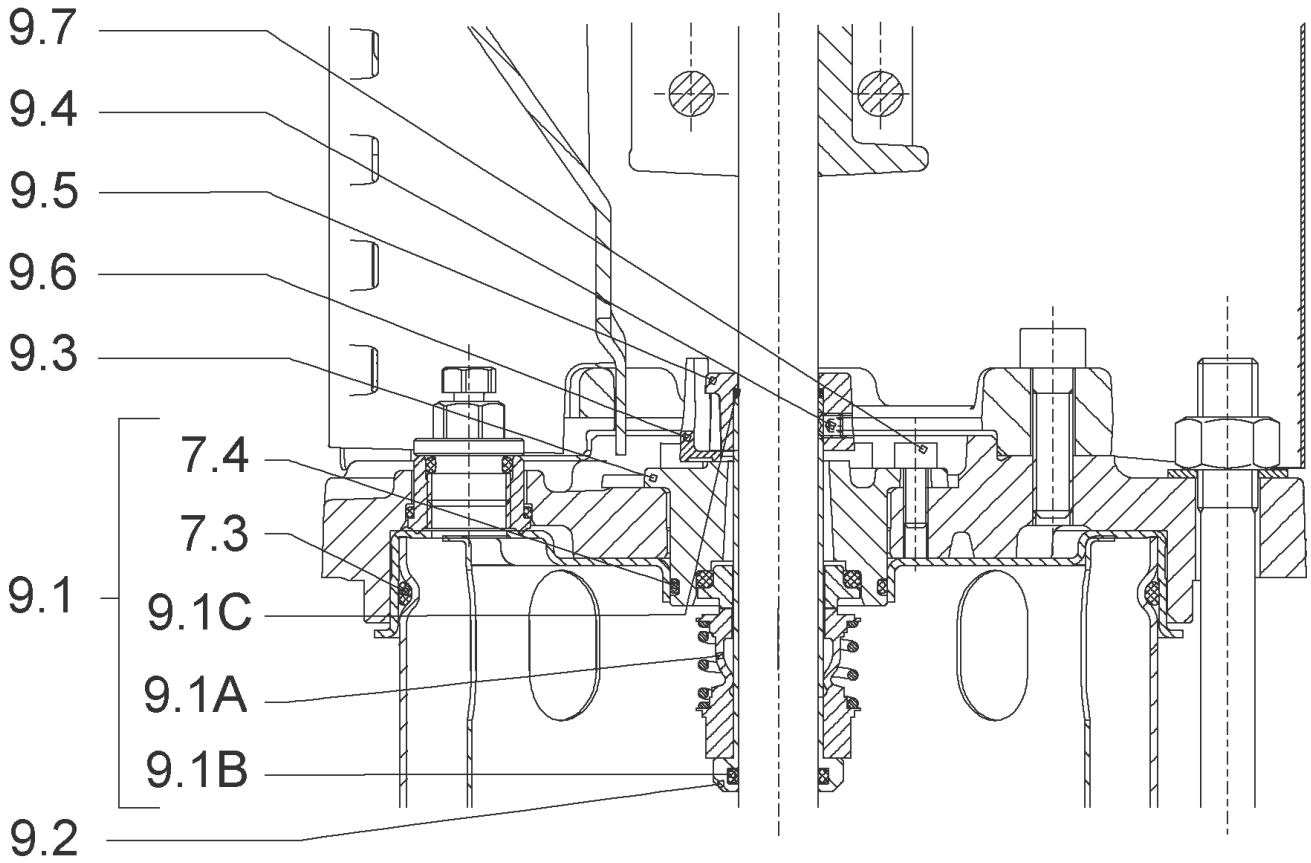
9.7
9.4
9.5
9.6
9.3
7.4
7.3
9.1
9.1C
9.1A
9.1B
9.2

## CARTRIDGE HELIX6-10-16 O/E KIT (4159696)

| Item | Article no. | Description | Quantity |
|---|---|---|---|
| 9.1 | 4159697 | SEAL-KIT-HELIX6-10-16 O/E | 1 |
| 7.3 | 4176513 | > O-RING FOR PUMP JACKET VP. | 1 |
| 7.4 | 2127603 | > O-RING ID.37,6x2,4 EPDM VP. | 1 |
| 9.1A | 2130966 | > MECH.SEAL HELIX2-4-6-10-16 O/E VP. | 1 |
| 9.1B | 2130967 | > O-RING D.16X2,5 EPDM VP. | 1 |
| 9.1C | 4176519 | > O-RING Ø16xØ1.25 VP. | 1 |
| 9.2 | 2130961 | SHAFT SLEEVE D.18/16X72,2 1.4404 VP. | 1 |
| 9.3 | 2130962 | RING HOLDER D.18 G606/G6 1.4301 VP. | 1 |
| 9.4 | 4176520 | SCREW CH M5x5 A4-70 ( 3PIECES ) | 1 |
| 9.5 | 2130963 | DRIVE RING D.29/18x12,4 MACH.VP. | 1 |
| 9.6 | 2130964 | TOOL M.S.CART.HELIX VP. | 1 |
| 9.7 | 2130965 | SCREW CHC M5X12 ISO4762 A2.70(4 PIECES) | 1 |

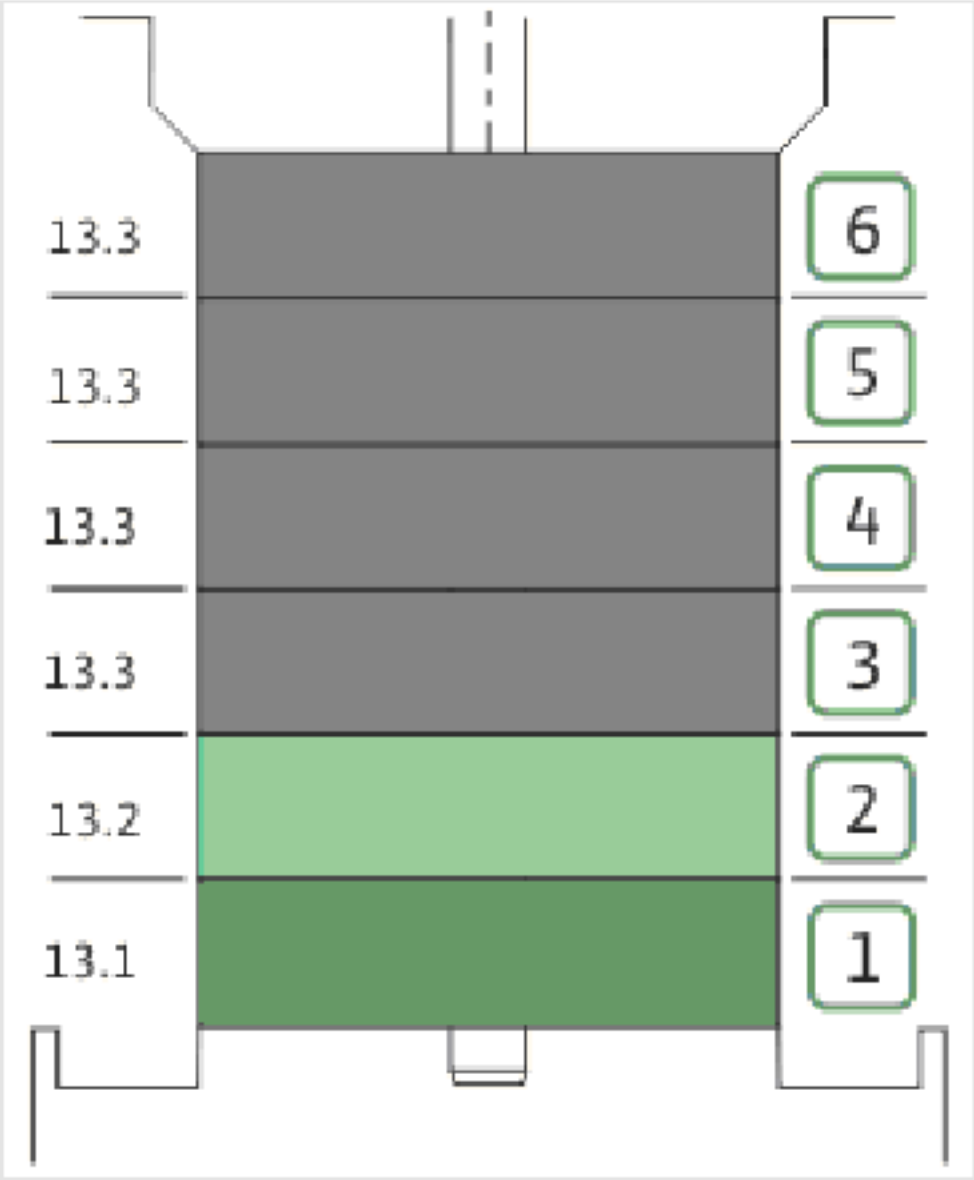
13.3
13.3
13.3
13.3
13.2
13.1
6
5
4
3
2
1

| Item | Article no. | Description | Quantity |
|---|---|---|---|
| 13.1 | 4159720 | STAGE HELIX 16 1.4301 KIT | 1 |
| | | > MACH.STG-CASING-WOGV-WNR-M+16-304 | 1 |
| | | > IMPELLER-M+16-304 | 1 |
| 13.2 | 4159714 | STAGE BEARING HELIX 16 1.4301 KIT | 1 |
| | | > MACH.BEARING-STG-CASING-WNR-M+16-304 | 1 |
| | | > IMPELLER-M+16-304 | 1 |
| | | > SLEEVE-SPACER-Ø19,35x30,665-304 | 1 |
| | | > SHAFT-SLEEVE-D16xD20x18-CW | 1 |
| 13.3 | 4159715 | INTERMEDIATE STAGE HELIX 16 1.4301 KIT | 1 |
| | | > CORPS-ETG-STD-ACR-AJR-USIN.M+16-304 | 1 |
| | | > IMPELLER-M+16-304 | 1 |
| | | > SPACER Ø16X19.4-L48.6-304 | 1 |

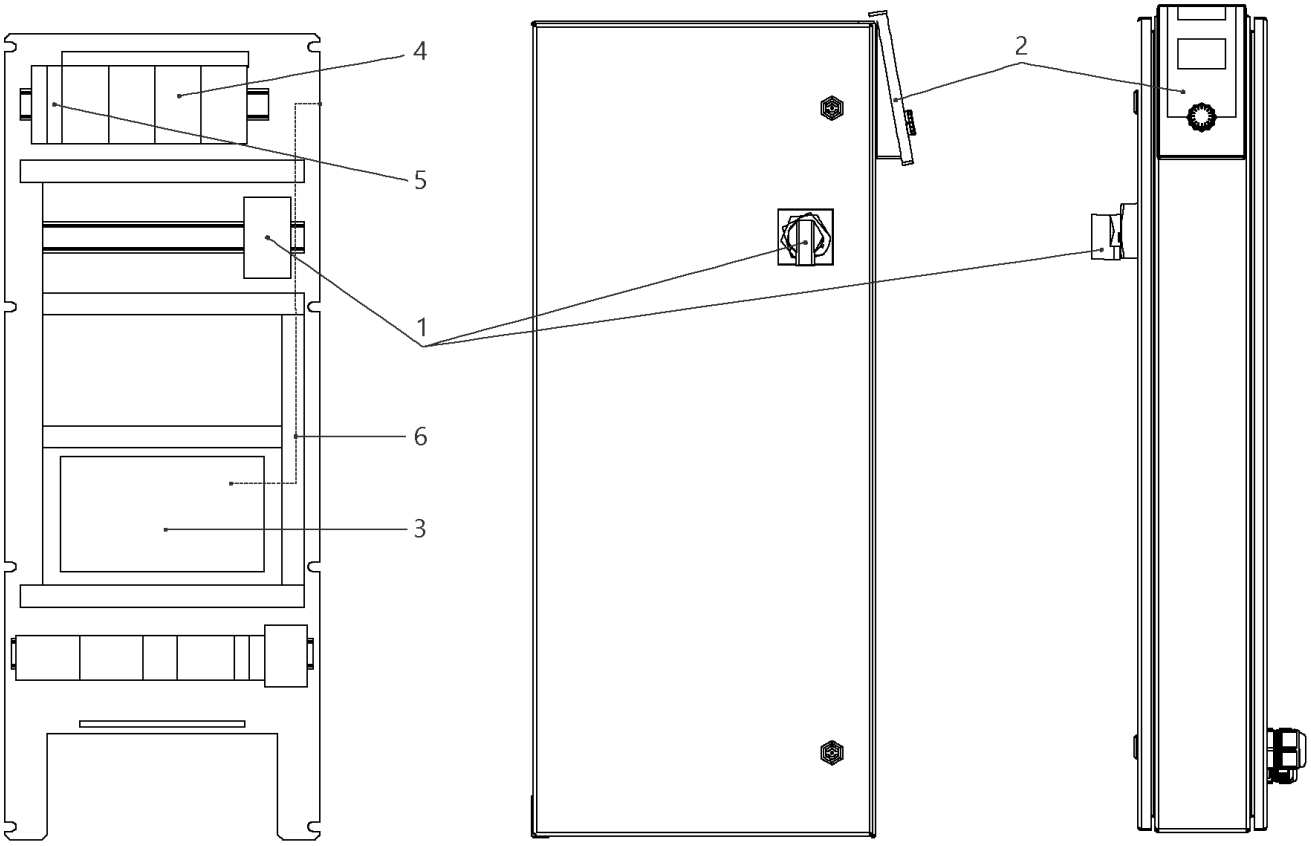
4
5
1
6
3
2

## W-CTRL-SCE-B-2x7,5KW-T4-FM-ND2

| Item | Article no. | Description | Quantity |
|---|---|---|---|
| 1 | 2104473 | MAIN SWITCH OT63F3 L105 KIT | 1 |
| 2 | 4184784 | CONTROL PANEL HMI SC KIT | 1 |
| 2 | 4185259 | ASSEMBLY DISPLAY SC PKG VP. | 1 |
| 3 | 4185257 | ASSEMBLY CPU SCe Booster VP. | 1 |
| 4 | 2051217 | AUTOM.CIRCUIT BREAKER S203 B16 TO7,5kW | 1 |
| 5 | 2046288 | CIRCUIT BREAKER S201 B16 | 1 |
| 6 | 4194956 | PATCH CABLE RJ45 CAT6 1,0M BLUE SC-PANEL | 1 |

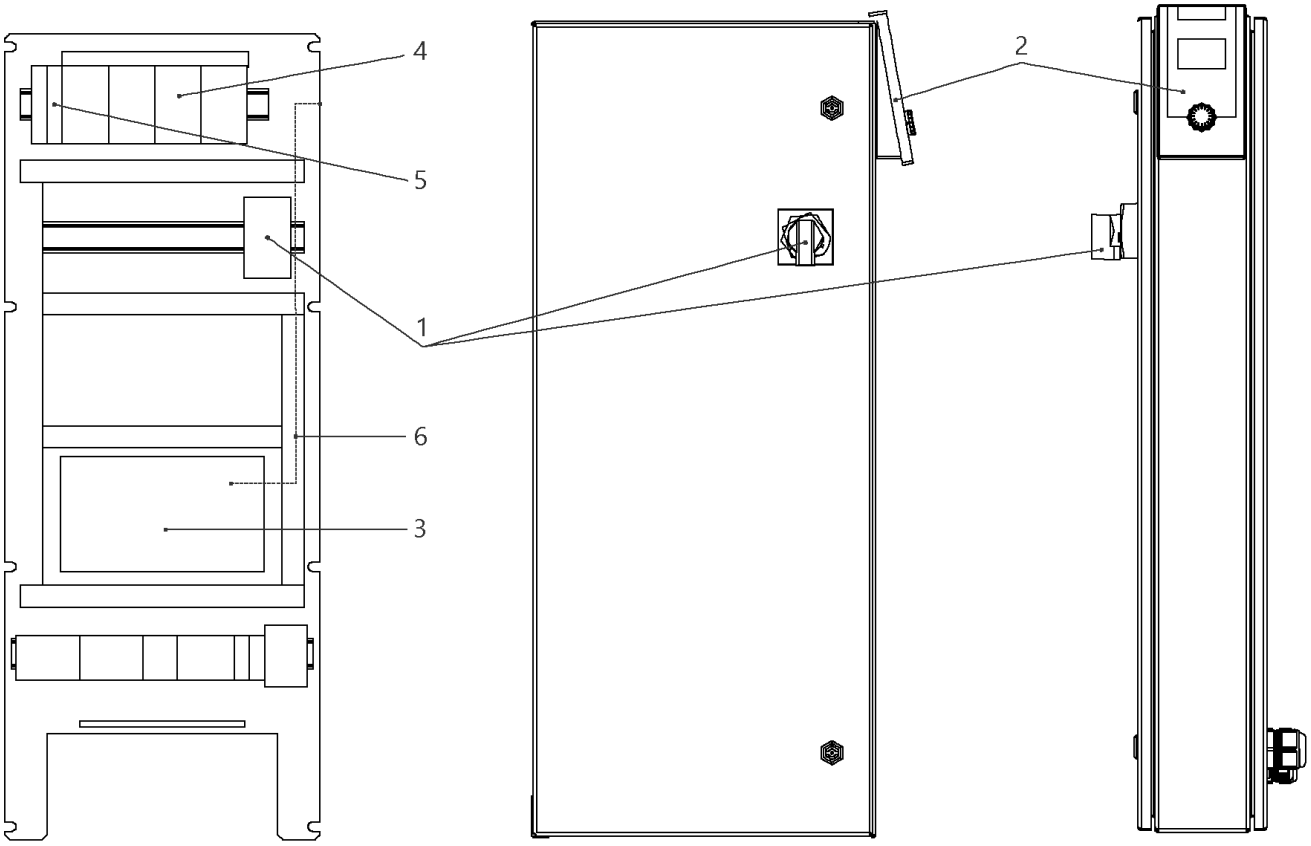
4
5
1
6
3
2

## W-CTRL-SCE-B-2x16A-T34-FM-ND2-AVC-PKG (2542075)

| Item | Article no. | Description | Quantity |
|---|---|---|---|
| 1 | 2104473 | MAIN SWITCH OT63F3 L105 KIT | 1 |
| Note: TO / BIS / JUSQU'AU 30/06/2015 | | | |
| 1 | 2104470 | MAIN SWITCH OT40F3 L250 KIT | 1 |
| Note: FROM / AB / À PARTIR DU 01/07/2015 | | | |
| 2 | 4184784 | CONTROL PANEL HMI SC KIT | 1 |
| 2 | 4185259 | ASSEMBLY DISPLAY SC PKG VP. | 1 |
| Note: DISPLAY ALONE / PLATINE SEULE | | | |
| 3 | 4185257 | ASSEMBLY CPU SCe Booster VP. | 1 |
| 4 | 4197832 | AUTOMATIC CIRCUIT BREAKER S203 B20 VP. | 1 |
| 5 | 2046288 | CIRCUIT BREAKER S201 B16 | 1 |
| 6 | 4194956 | PATCH CABLE RJ45 CAT6 1,0M BLUE SC-PANEL | 1 |

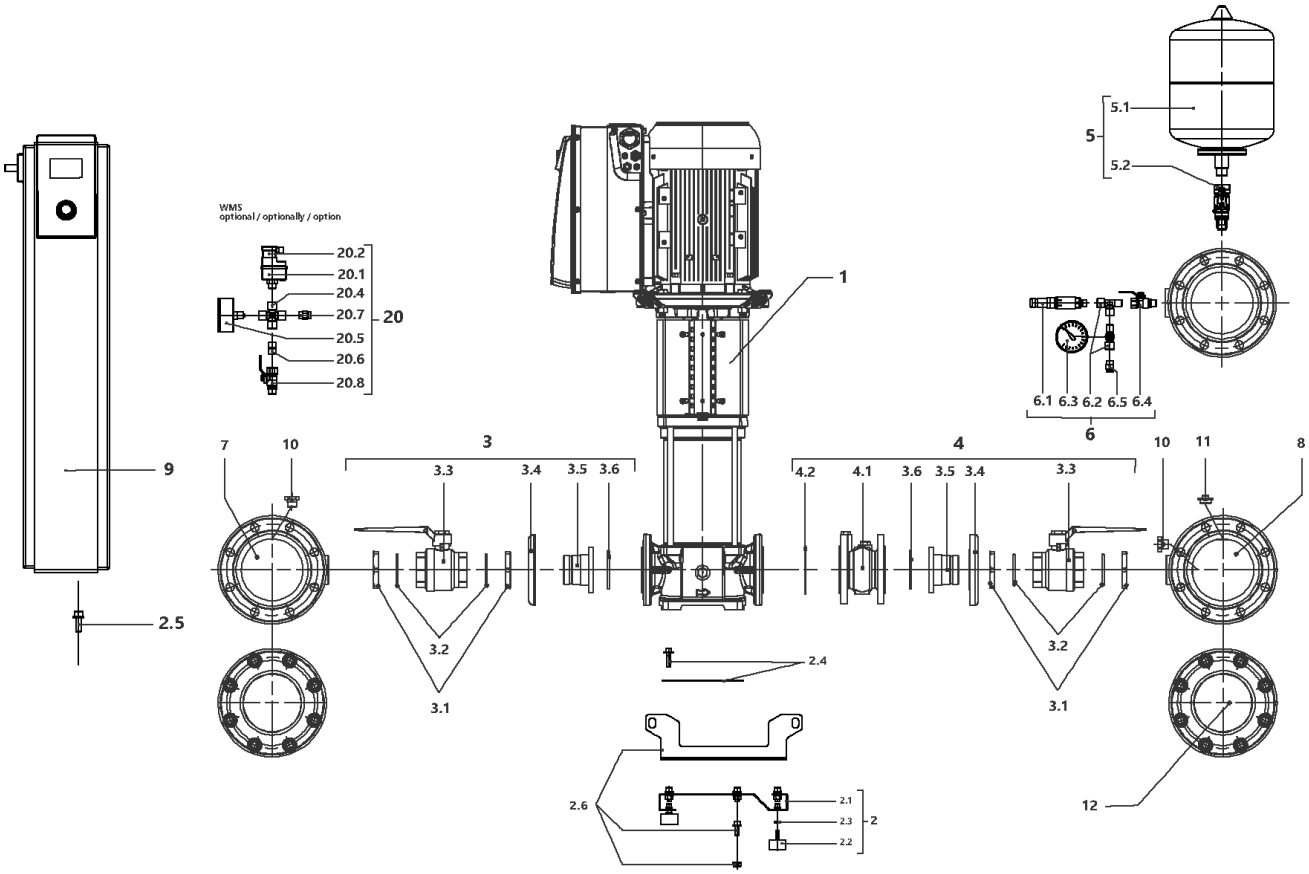
WMS
optional / optionally / option
20.2
20.1
20.4
20.7
20.5
20.6
20.8
20
1
5.1
5
5.2
6.1 6.3 6.2 6.5 6.4
6
9
7
10
3
3.3
3.4
3.5 3.6
4
4.2
4.1
3.6 3.5 3.4
3.3
10
11
8
2.5
3.2
3.1
2.4
3.2
3.1
2.6
2.1
2.3
2.2
2
12

## SiBoost Smart 2HELIX VE2202/3kW (2540937)

| Item | Article no. | Description | Quantity |
|---|---|---|---|
| 1 | | HELIX VE2202-3.0-4/16/E/S | 1 |
| 2 | 4203977 | BASE PLATE DE2 850x420 M10 KIT | 1 |
| 2.1 | | > BASEPLATE_2x4/6/10/16V_E300_BOX_150 | 1 |
| 2.2 | 2027881 | > VIBRATION DAMPER M.10X20 D.70 | 1 |
| 2.3 | 2028281 | > NUT M10 DIN936 (ISO4035) 17H VZ | 1 |
| 2.4 | 4203978 | > HOLDER PUMP Siboost Helix 22 KIT | 1 |
| 2.5 | 4197084 | > HOLDER SWITCHBOX WILO Smart Control KIT | 1 |
| 2.6 | 4203979 | > LIFTING Siboost HELIX 22/36 KIT | 1 |
| 3 | 4203980 | SUCTION SIDE Siboost Helix 22 KIT | 1 |
| 3.1 | 2028689 | > NUT G2"X14 RG | 1 |
| 3.2 | 2028690 | > O-RING ID.53,35X5,33 EP851 | 1 |
| 3.2 | 2663977 | > BALL VALVE TYP250W IG.2" PN35 GIACOMINI | 1 |
| 3.4 | 2028285 | > LAPPED FLANGE DN50 1.4301 DIN2642P | 1 |
| 3.5 | 4203981 | > UNION INSERT DN50-G2" FLANGE AISI304 VP. | 1 |
| 3.6 | 2029911 | > O-RING ID.69,2X5,33 EPDM 70 SHR | 1 |
| 4 | 4203982 | DELIVERY SIDE Siboost Helix 22 KIT | 1 |
| 3.1 | 2028689 | > NUT G2"X14 RG | 1 |
| 3.2 | 2028690 | > O-RING ID.53,35X5,33 EP851 | 1 |
| 3.3 | 2663977 | > BALL VALVE TYP250W IG.2" PN35 GIACOMINI | 1 |
| 3.4 | 2028285 | > LAPPED FLANGE DN50 1.4301 DIN2642P | 1 |
| 3.5 | 4203981 | > UNION INSERT DN50-G2" FLANGE AISI304 VP. | 1 |
| 3.6 | 2029911 | > O-RING ID.69,2X5,33 EPDM 70 SHR | 1 |
| 4.1 | 2118590 | > NON RETURN VALVE DN50 PN16 VP. | 1 |
| 4.2 | 4202854 | > Flat gasket D61x107x2_DN50_PN25_FIBER VP | 1 |
| 5 | 4203983 | DIAPHREM TANK 8L/PN16 DIN4807/T5 KIT | 1 |
| 5.1 | 2045914 | > DIAPHREM TANK 8L TYP-DD 16BAR | 1 |
| 5.2 | 4189350 | > FLOW FITTING G3/4 FOR DIAPHRAG VESSEL VP | 1 |
| 6 | 4197076 | PRESSURE SENSOR/ GAUGE 0-16BAR KIT | 1 |
| 6.1 | 2085909 | > PRESS.SENSOR 1/4" 0-16BAR 4-20MA VP. | 1 |
| 6.2 | 4197077 | > T-PIECE 1/4" VP. | 1 |
| 6.3 | 2028692 | > PRESSURE GAUGE NG63-PN16-G1/4 | 1 |
| 6.4 | 2028291 | > BALL TAP R1/4" PN42 GIACOMINI R254DL | 1 |
| 6.5 | 2028691 | > BLOWGUN 1/4" MS 30BAR VP. | 1 |
| 7 | 4203984 | PIPE DE2 3"-2x2"+2x1/4x600 VP. | 1 |

| Item | Article no. | Description | Quantity |
|---|---|---|---|
| 8 | 4203985 | PIPE DE2 3"-2x2"+1x1/4+1x3/4x600 VP. | 1 |
| 9 | | W-CTRL-SCE-B-2x13A-T34-FM-ND2-AVC-PKG | 1 |
| 10 | 4197079 | PLUG G1/4"x10 AISI304 KIT | 1 |
| 11 | 2032654 | PLUG R3/4" MS VIEGA 1751 | 1 |
| 20 | | ASSEMBLY WMS. DE-EB. +VP | 1 |
| 20.1 | 2028652 | > PRESSURE SWITCH PS3-ASR 1/(1,3) VP. | 1 |
| 20.2 | 2130983 | > PLUG PS3-415 WITH KABEL 1,5M 2NO VP. | 1 |
| 20.4 | 2028290 | > CROSSPIECE R1/4" MS-NICKEL | 1 |
| 20.5 | 2028687 | > PRESSURE GAUGE NG63 R1/4" HI.0-6BAR | 1 |
| 20.6 | 2054268 | > DUAL NIPPLE G1/4" x G1/4" MS VP. | 1 |
| 20.7 | 2028691 | > BLOWGUN 1/4" MS 30BAR VP. | 1 |
| 20.8 | 2028291 | > BALL TAP R1/4" PN42 GIACOMINI R254DL | 1 |

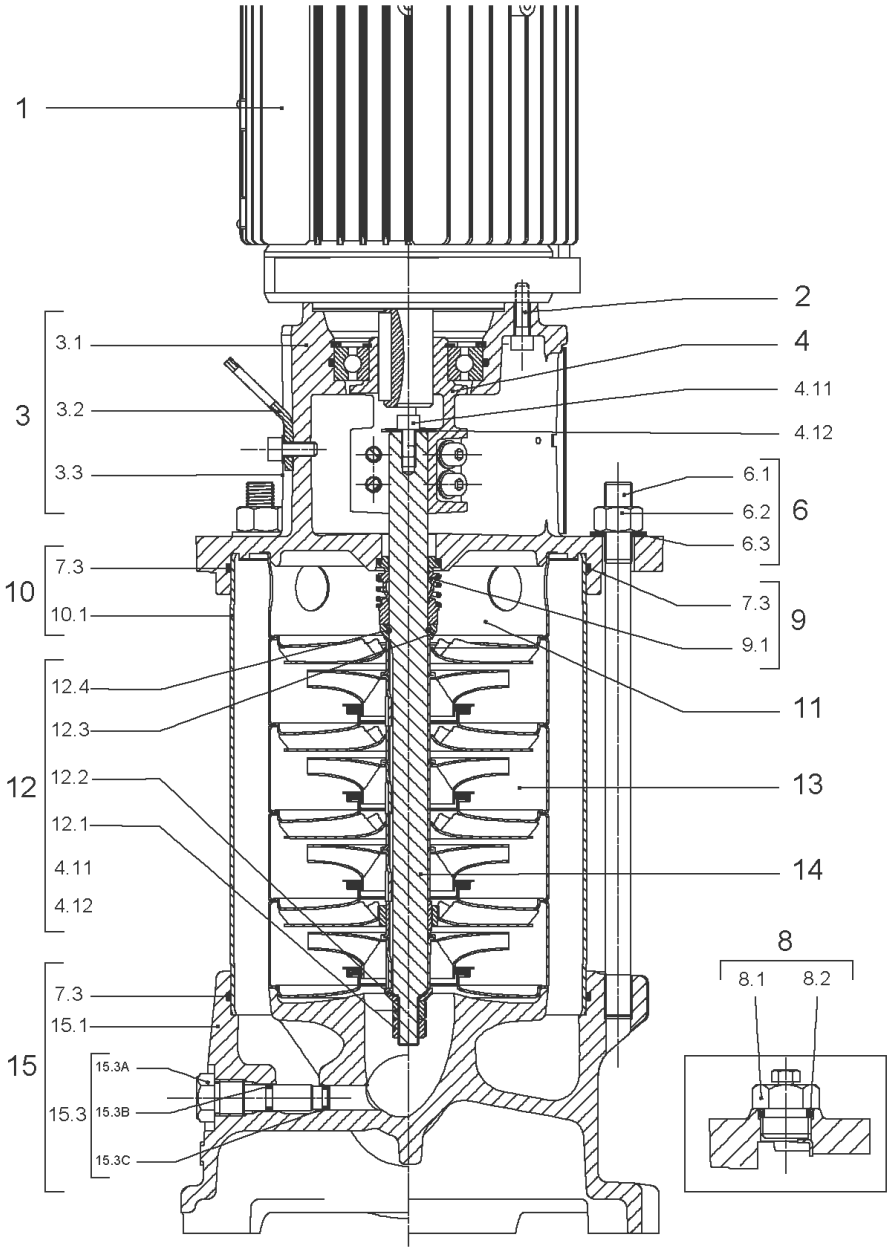
1
2
3.1
4
4.11
3
3.2
4.12
3.3
6.1
6.2
6
6.3
7.3
10
10.1
7.3
9
9.1
12.4
11
12.3
12
12.2
13
12.1
4.11
14
4.12
8
8.1
8.2
7.3
15.1
15
15.3A
15.3
15.3B
15.3C

| Item | Article no. | Description | Quantity |
|---|---|---|---|
| 1 | | DRIVE HELIX-VE2202-3.0-WE KIT | 1 |
| Note: MOTOR BRAND WILO ELEC | | | |
| 1 | | DRIVE HELIX-VE2202-3.0-IE4-WE KIT | 1 |
| Note: MOTOR BRAND WILO ELEC | | | |
| 2 | 4159707 | SCREW M8X30 (4 PIECES) | 1 |
| 3 | 4186356 | LANTERN HELIX OPTI 8" FT130 KIT | 1 |
| 3.1 | | > M+8_LANTERN_ONE-PIECE_FT130_CATA_DWA | 1 |
| 3.2 | 4184852 | > EYELET CPL.FT HELIX (2 PIECES) | 1 |
| 3.3 | 4184853 | > COUPLING PROTECTOR FT HELIX 8'' KIT | 1 |
| 4 | 4184854 | COUPLING D.22XD.28 FT130 HELIX KIT | 1 |
| 6 | 4179563 | STUD BOLT M16X198 KIT | 1 |
| 6.1 | | > TIE BOLT M16-198x24x44-1.4057 | 1 |
| 6.2 | 4179562 | > NUT M16 8.8 ISO4032 (4 PIECES) | 1 |
| 6.3 | 4097852 | > WASHER-CS-16.4-32-2.8-NFE25-511-A2 | 1 |
| 8 | 4186377 | FILING/PURGING PLUG 304 HELIX KIT | 1 |
| 8.1 | | > FILLING/VENTING-PLUG-MVI8/10"-304 | 1 |
| 8.2 | 4032291 | > O-RING 17x3 EPDM KTW/WRC | 1 |
| 9 | 4192148 | SEAL-KIT-HELIX22-36-52 FIRST O/E | 1 |
| 7.3 | 4179571 | > O-RING HOUSING PIPE HELIX22/36/52 VP. | 1 |
| 9.1 | 4179573 | > M.SEAL.HELIX22-36-52 O/E VP. | 1 |
| 10 | 4181154 | HOUSING PIPE D.204X164 1.4307 KIT | 1 |
| 7.3 | 4179571 | > O-RING HOUSING PIPE HELIX22/36/52 VP. | 1 |
| 10.1 | | > HOUSING-PIPE Ø204-M+2201/2202-304 | 1 |
| 11 | 4179143 | CENTERING STAGE-RETURN HELIX22 1.4307 VP | 1 |
| 12 | 4184856 | SHAFT EQUIPMENT HELIX 22 FIRST KIT | 1 |
| 13 | | HYDRAULIC HELIX V 2202 | 1 |
| 14 | 4184857 | SHAFT D.22X251 1.4057 VP. | 1 |
| 15 | 4186357 | EQUIPED HOUSING HELIX OPTI DN50 GJL KIT | 1 |
| 15.1 | | > PUMP CASING MONO.GJL M+8" DN50 DWA | 1 |
| 15.3 | 4106048 | > DRAIN/PRIMING PLUG EPDM HELIX FIRST KIT | 1 |
| 15.3A | | >> DRAIN AND PRIMING PLUG-VMI10"-304 | 1 |
| 15.3B | 4032293 | >> O-RING-10x3-EPDM-KTW/WRC | 1 |
| 15.3C | 4233957 | >> O-RING ID.9 EPDM VP. | 1 |
| 7.3 | 4179571 | > O-RING HOUSING PIPE HELIX22/36/52 VP. | 1 |

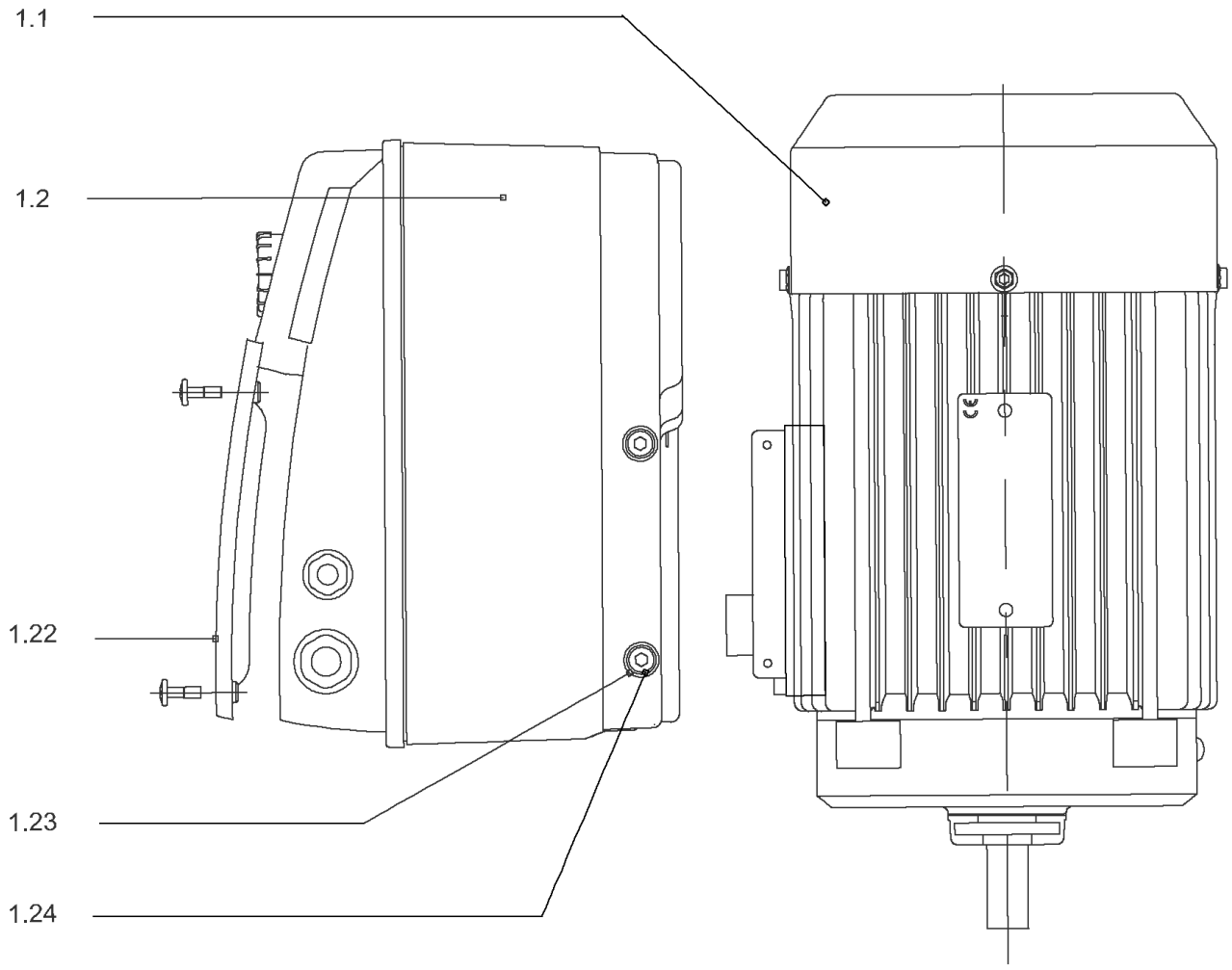
1.1
1.2
1.22
1.23
1.24

## DRIVE HELIX-VE2202-3.0-WE KIT

| Item | Article no. | Description | Quantity |
|---|---|---|---|
| 1.1 | | M3-T638P55V18H-100F13-SU-N28-WE-IE2 VP. | 1 |
| Note: no longer available/nicht mehrlieferbar/n'est plus disponible | | | |
| | | SPARE PARTS MOTOR:ON REQUEST | 1 |
| 1.2 | 4186411 | MODULE HELIX-VE2202-3.0-IE2-WE KIT | 1 |
| 1.22 | 2054227 | > MODULE COVER/GASKET TL3/4 KIT | 1 |
| 1.23 | 4215716 | > SCREW M5X16 DIN912 8.8 A2A (4pieces) VP. | 1 |
| 1.24 | 2057978 | > RONDELLE A5,3 DIN6797 FST ZN (4 PIECES) | 1 |

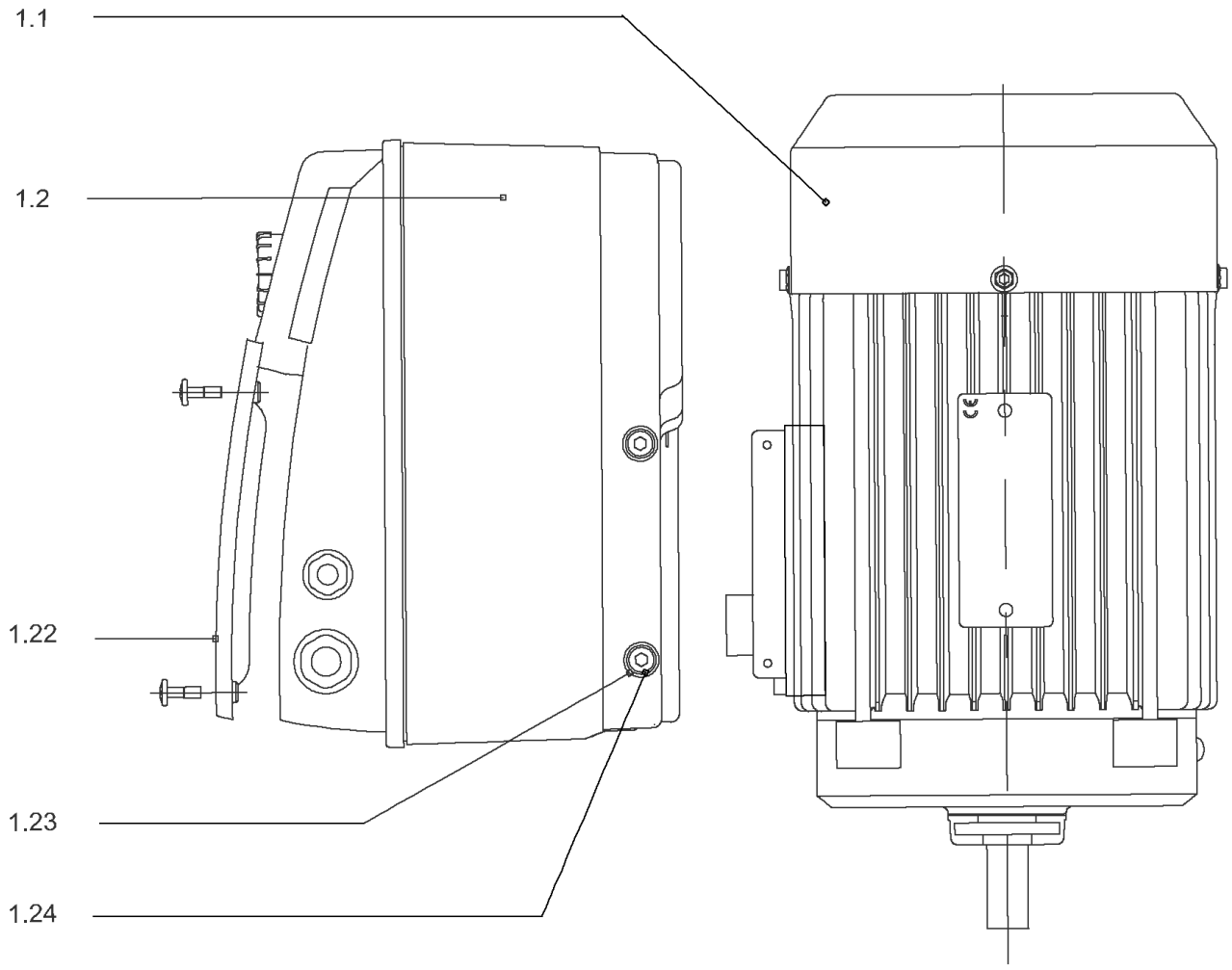
1.1
1.2
1.22
1.23
1.24

## DRIVE HELIX-VE2202-3.0-IE4-WE KIT

| Item | Article no. | Description | Quantity |
|---|---|---|---|
| 1.1 | 4207922 | MOTOR 3/2/100 3~ 380V 60HZ IE4 WE VP. | 1 |
| | | SPARE PARTS MOTOR:ON REQUEST | 1 |
| 1.2 | 4209341 | MODULE HELIX-VE2202-3.0-IE4-WE KIT | 1 |
| 1.22 | 2054227 | > MODULE COVER/GASKET TL3/4 KIT | 1 |
| 1.23 | 4215716 | > SCREW M5X16 DIN912 8.8 A2A (4pieces) VP. | 1 |
| 1.24 | 2057978 | > RONDELLE A5,3 DIN6797 FST ZN (4 PIECES) | 1 |

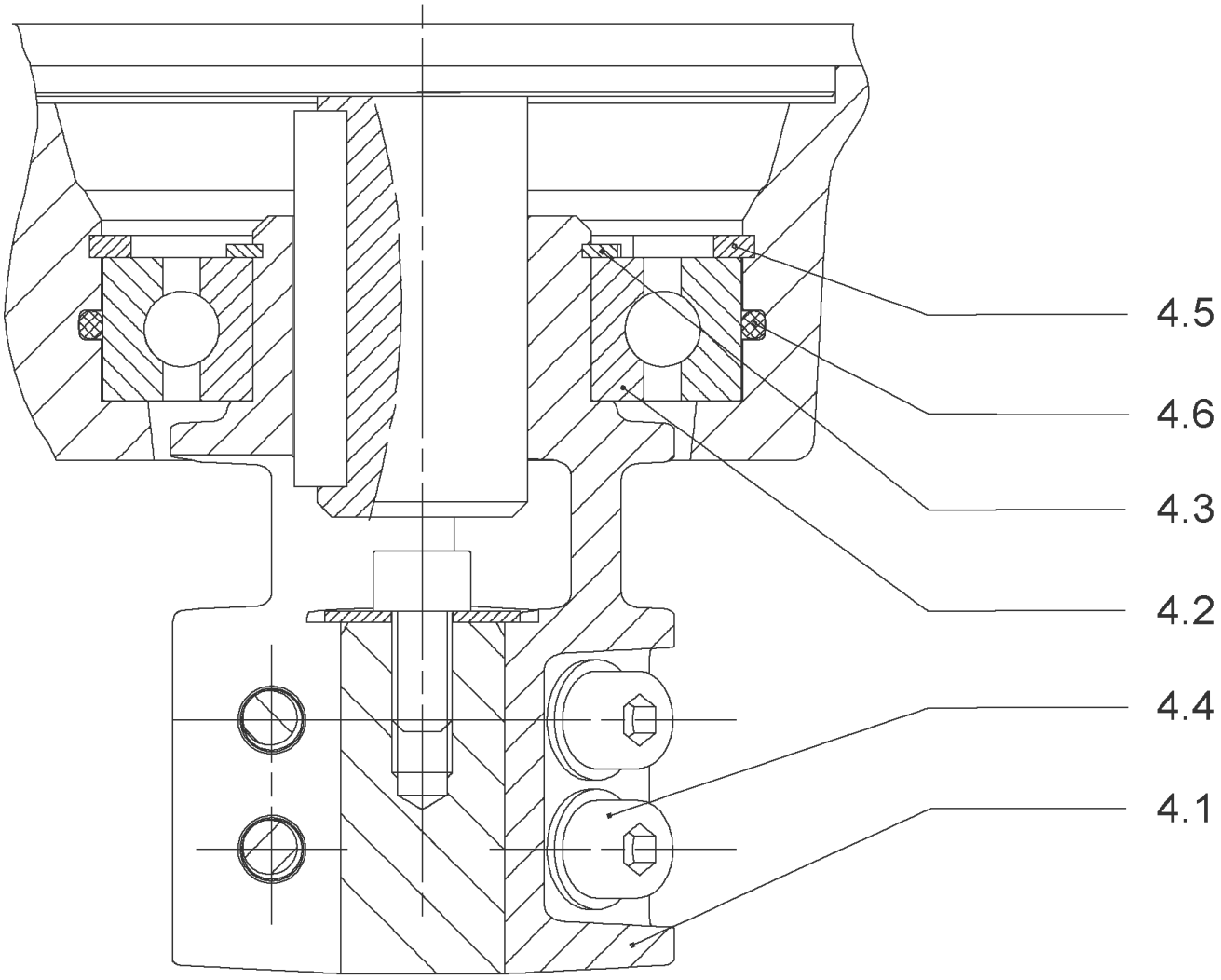
4.5
4.6
4.3
4.2
4.4
4.1

## COUPLING D.22XD.28 FT130 HELIX KIT (4184854)

| Item | Article no. | Description | Quantity |
|---|---|---|---|
| 4.1 | | COUPLING-VMI-Ø22xØ28-FT130-MACHINED | 1 |
| 4.2 | 2131022 | BALL BEARING 6209/ZZ-C3(HT)VP. | 1 |
| 4.3 | 4233930 | CIRCLIP-FOR-BORES-D45x1,75 VP. | 1 |
| 4.4 | 4157726 | SCREW KIT M8X30 (4 PIECES) | 1 |
| 4.5 | 4234252 | CIRCLIPS 85X3 VP. | 1 |
| 4.6 | 4234243 | O-RING 85X3 VP. | 1 |
| | | NOMEL CONTACT WASHER 8x16x1,4 STEEL ZC | 1 |

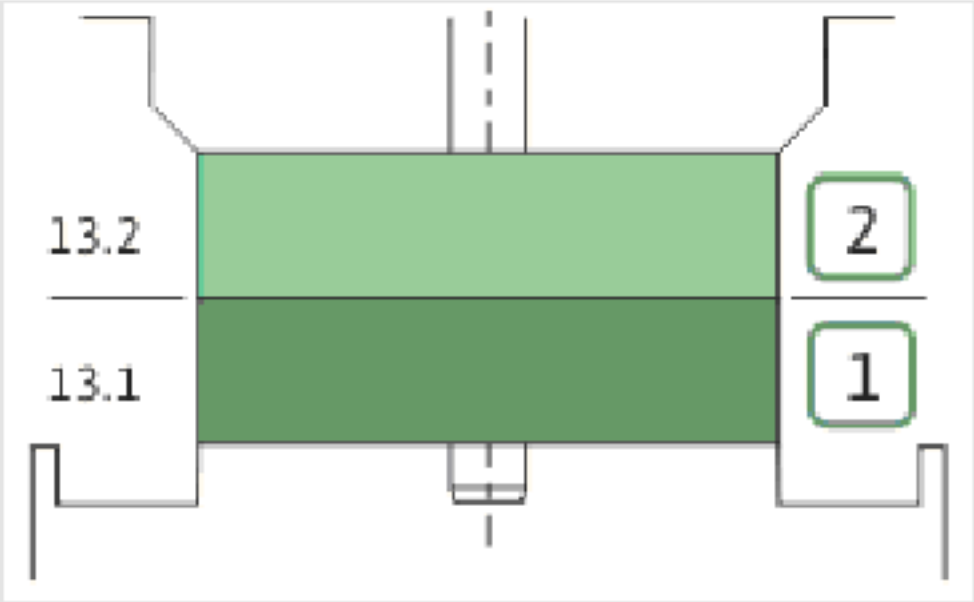
13.2
13.1
2
1

| Item | Article no. | Description | Quantity |
|---|---|---|---|
| 13.1 | 4157739 | FIRST STAGE HELIX 22 1.4307 KIT | 1 |
| | | > IMPELLER-H1-M+22-304 | 1 |
| | | > MACH.STG-CASING-WOGV-WNR-M+22-304 | 1 |
| 13.2 | 4157740 | BEARING STAGE HELIX 22 1.4307 KIT | 1 |
| | | > IMPELLER-H2-M+22-304 | 1 |
| | | > MACH.BEARING-STG-CASING-WNR-M+22-304 | 1 |
| | | > SHAFT-SLEEVE-D26xD22x16-CW | 1 |

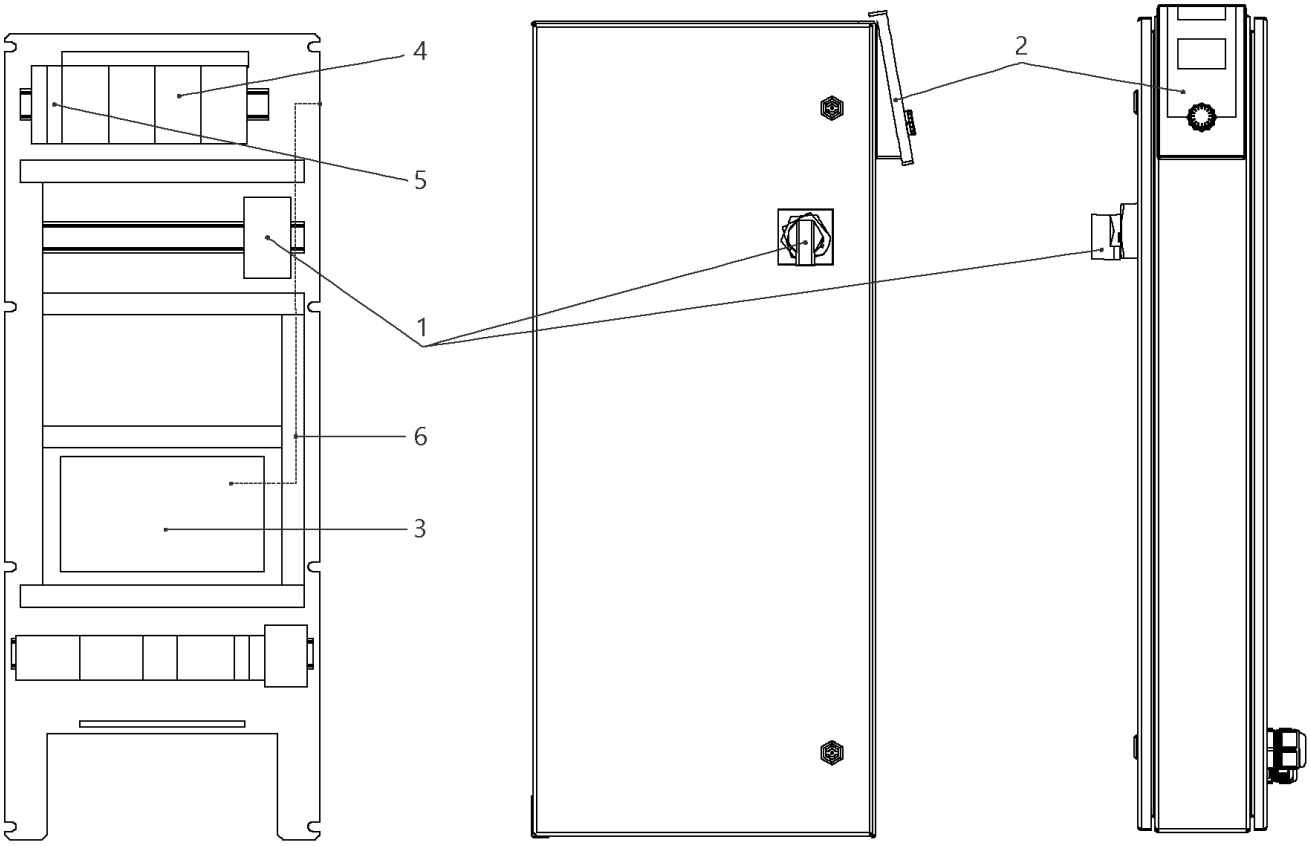
4
5
1
6
3
2

## W-CTRL-SCE-B-2x13A-T34-FM-ND2-AVC-PKG

| Item | Article no. | Description | Quantity |
|---|---|---|---|
| 1 | 2104473 | MAIN SWITCH OT63F3 L105 KIT | 1 |
| Note: TO / BIS / JUSQU'AU 30/06/2015 | | | |
| 1 | 2104470 | MAIN SWITCH OT40F3 L250 KIT | 1 |
| Note: FROM / AB / À PARTIR DU 01/07/2015 | | | |
| 2 | 4184784 | CONTROL PANEL HMI SC KIT | 1 |
| 2 | 4185259 | ASSEMBLY DISPLAY SC PKG VP. | 1 |
| Note: DISPLAY ALONE / PLATINE SEULE | | | |
| 3 | 4185257 | ASSEMBLY CPU SCe Booster VP. | 1 |
| 4 | 2051217 | AUTOM.CIRCUIT BREAKER S203 B16 TO7,5kW | 1 |
| 5 | 2046288 | CIRCUIT BREAKER S201 B16 | 1 |
| 6 | 4194956 | PATCH CABLE RJ45 CAT6 1,0M BLUE SC-PANEL | 1 |

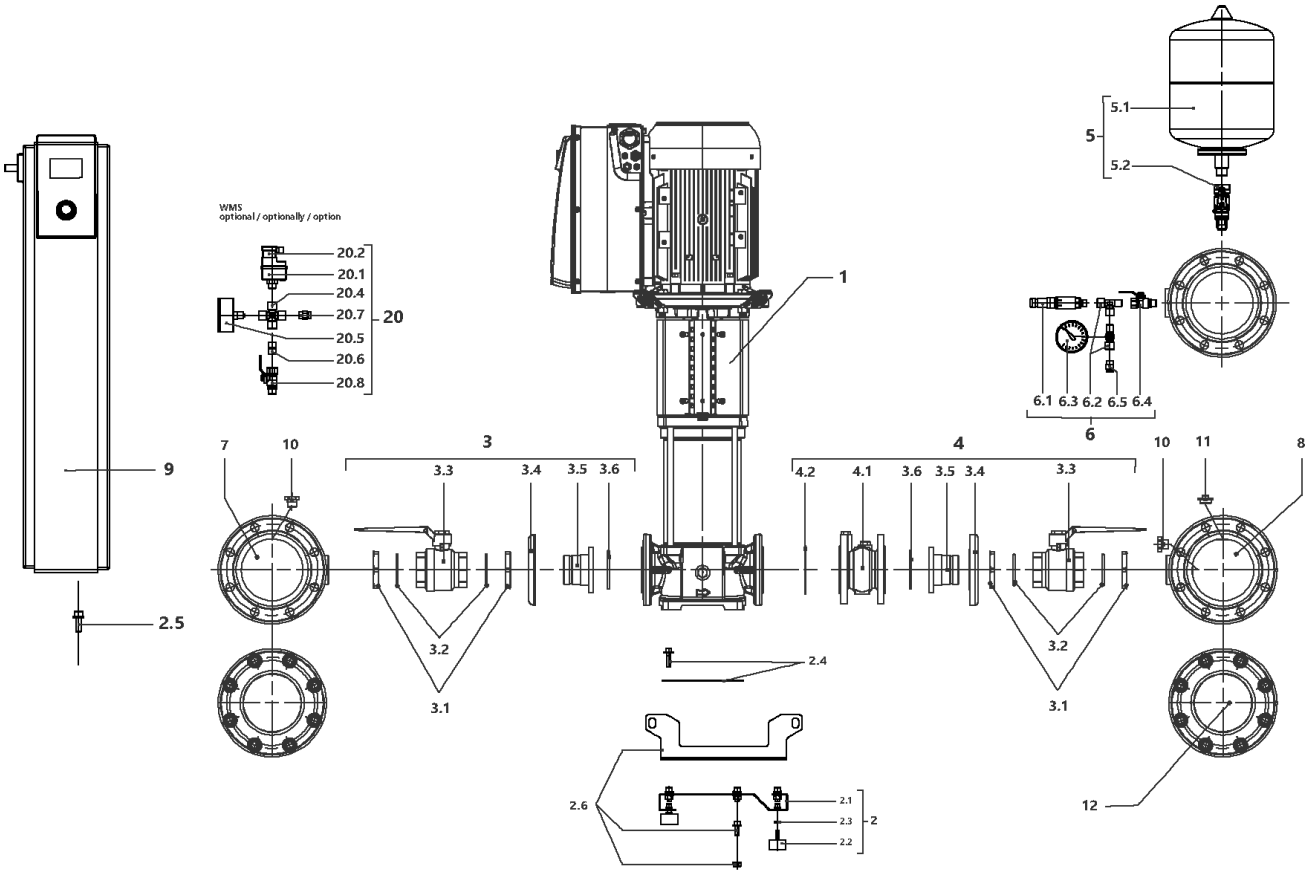
WMS
optional / optionally / option
20.2
20.1
20.4
20.7
20.5
20.6
20.8
20
1
5.1
5
5.2
6.1 6.3 6.2 6.5 6.4
6
9
7
10
3
3.3
3.4
3.5 3.6
4.2
4.1
3.6 3.5 3.4
4
10
11
8
2.5
3.2
3.1
2.4
2.6
2.1
2.3
2.2
2
12

## SiBoost Smart 2HELIX VE2202/4kW (2540901)

| Item | Article no. | Description | Quantity |
|---|---|---|---|
| 1 | | HELIX VE2202-4.0-4/16/E/S | 1 |
| 2 | 4203977 | BASE PLATE DE2 850x420 M10 KIT | 1 |
| 2.1 | | > BASEPLATE_2x4/6/10/16V_E300_BOX_150 | 1 |
| 2.2 | 2027881 | > VIBRATION DAMPER M.10X20 D.70 | 1 |
| 2.3 | 2028281 | > NUT M10 DIN936 (ISO4035) 17H VZ | 1 |
| 2.4 | 4203978 | > HOLDER PUMP Siboost Helix 22 KIT | 1 |
| 2.5 | 4197084 | > HOLDER SWITCHBOX WILO Smart Control KIT | 1 |
| 2.6 | 4203979 | > LIFTING Siboost HELIX 22/36 KIT | 1 |
| 3 | 4203980 | SUCTION SIDE Siboost Helix 22 KIT | 1 |
| 3.1 | 2028689 | > NUT G2"X14 RG | 1 |
| 3.2 | 2028690 | > O-RING ID.53,35X5,33 EP851 | 1 |
| 3.2 | 2663977 | > BALL VALVE TYP250W IG.2" PN35 GIACOMINI | 1 |
| 3.4 | 2028285 | > LAPPED FLANGE DN50 1.4301 DIN2642P | 1 |
| 3.5 | 4203981 | > UNION INSERT DN50-G2" FLANGE AISI304 VP. | 1 |
| 3.6 | 2029911 | > O-RING ID.69,2X5,33 EPDM 70 SHR | 1 |
| 4 | 4203982 | DELIVERY SIDE Siboost Helix 22 KIT | 1 |
| 3.1 | 2028689 | > NUT G2"X14 RG | 1 |
| 3.2 | 2028690 | > O-RING ID.53,35X5,33 EP851 | 1 |
| 3.3 | 2663977 | > BALL VALVE TYP250W IG.2" PN35 GIACOMINI | 1 |
| 3.4 | 2028285 | > LAPPED FLANGE DN50 1.4301 DIN2642P | 1 |
| 3.5 | 4203981 | > UNION INSERT DN50-G2" FLANGE AISI304 VP. | 1 |
| 3.6 | 2029911 | > O-RING ID.69,2X5,33 EPDM 70 SHR | 1 |
| 4.1 | 2118590 | > NON RETURN VALVE DN50 PN16 VP. | 1 |
| 4.2 | 4202854 | > Flat gasket D61x107x2_DN50_PN25_FIBER VP | 1 |
| 5 | 4203983 | DIAPHREM TANK 8L/PN16 DIN4807/T5 KIT | 1 |
| 5.1 | 2045914 | > DIAPHREM TANK 8L TYP-DD 16BAR | 1 |
| 5.2 | 4189350 | > FLOW FITTING G3/4 FOR DIAPHRAG VESSEL VP | 1 |
| 6 | 4197076 | PRESSURE SENSOR/ GAUGE 0-16BAR KIT | 1 |
| 6.1 | 2085909 | > PRESS.SENSOR 1/4" 0-16BAR 4-20MA VP. | 1 |
| 6.2 | 4197077 | > T-PIECE 1/4" VP. | 1 |
| 6.3 | 2028692 | > PRESSURE GAUGE NG63-PN16-G1/4 | 1 |
| 6.4 | 2028291 | > BALL TAP R1/4" PN42 GIACOMINI R254DL | 1 |
| 6.5 | 2028691 | > BLOWGUN 1/4" MS 30BAR VP. | 1 |
| 7 | 4203984 | PIPE DE2 3"-2x2"+2x1/4x600 VP. | 1 |

| Item | Article no. | Description | Quantity |
|---|---|---|---|
| 8 | 4203985 | PIPE DE2 3"-2x2"+1x1/4+1x3/4x600 VP. | 1 |
| 9 | | W-CTRL-SCE-B-2x13A-T34-FM-ND2-AVC-PKG | 1 |
| 10 | 4197079 | PLUG G1/4"x10 AISI304 KIT | 1 |
| 11 | 2032654 | PLUG R3/4" MS VIEGA 1751 | 1 |
| 20 | | ASSEMBLY WMS. DE-EB. +VP | 1 |
| 20.1 | 2028652 | > PRESSURE SWITCH PS3-ASR 1/(1,3) VP. | 1 |
| 20.2 | 2130983 | > PLUG PS3-415 WITH KABEL 1,5M 2NO VP. | 1 |
| 20.4 | 2028290 | > CROSSPIECE R1/4" MS-NICKEL | 1 |
| 20.5 | 2028687 | > PRESSURE GAUGE NG63 R1/4" HI.0-6BAR | 1 |
| 20.6 | 2054268 | > DUAL NIPPLE G1/4" x G1/4" MS VP. | 1 |
| 20.7 | 2028691 | > BLOWGUN 1/4" MS 30BAR VP. | 1 |
| 20.8 | 2028291 | > BALL TAP R1/4" PN42 GIACOMINI R254DL | 1 |

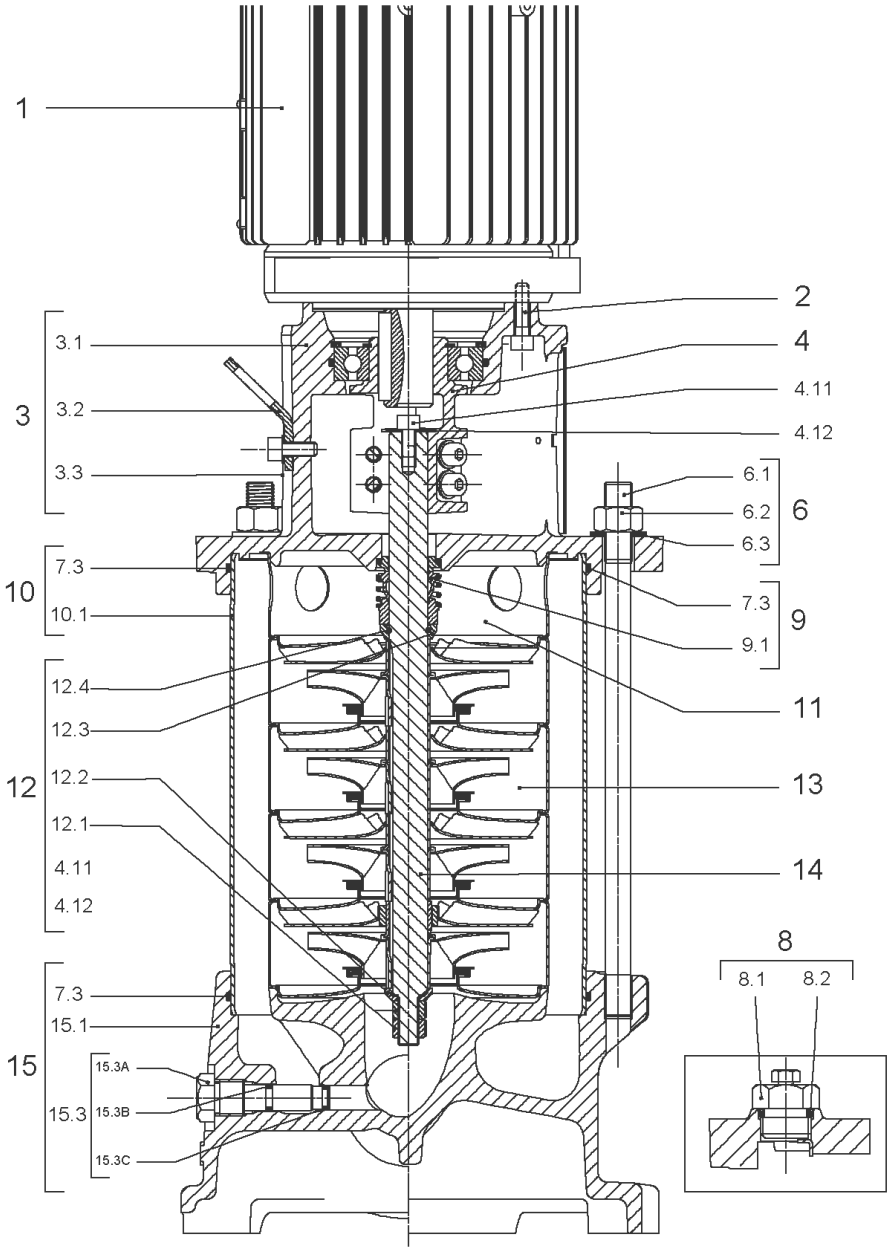
1
2
4
4.11
4.12
3
3.1
3.2
3.3
6
6.1
6.2
6.3
10
7.3
10.1
9
7.3
9.1
11
12
12.4
12.3
12.2
12.1
4.11
4.12
13
14
8
8.1
8.2
15
7.3
15.1
15.3
15.3A
15.3B
15.3C

| Item | Article no. | Description | Quantity |
|---|---|---|---|
| 1 | | DRIVE HELIX-VE2202-4.0-WE KIT | 1 |
| Note: MOTOR BRAND WILO ELEC | | | |
| 1 | | DRIVE HELIX-VE2202-IE2-ATB KIT | 1 |
| Note: MOTOR BRAND ATB | | | |
| 1 | | DRIVE HELIX-VE2202-4.0-IE4-WE KIT | 1 |
| Note: MOTOR BRAND WILO ELEC | | | |
| 2 | 4159707 | SCREW M8X30 (4 PIECES) | 1 |
| 3 | 4186356 | LANTERN HELIX OPTI 8" FT130 KIT | 1 |
| 3.1 | | > M+8_LANTERN_ONE-PIECE_FT130_CATA_DWA | 1 |
| 3.2 | 4184852 | > EYELET CPL.FT HELIX (2 PIECES) | 1 |
| 3.3 | 4184853 | > COUPLING PROTECTOR FT HELIX 8'' KIT | 1 |
| 4 | 4184854 | COUPLING D.22XD.28 FT130 HELIX KIT | 1 |
| 6 | 4179563 | STUD BOLT M16X198 KIT | 1 |
| 6.1 | | > TIE BOLT M16-198x24x44-1.4057 | 1 |
| 6.2 | 4179562 | > NUT M16 8.8 ISO4032 (4 PIECES) | 1 |
| 6.3 | 4097852 | > WASHER-CS-16.4-32-2.8-NFE25-511-A2 | 1 |
| 8 | 4186377 | FILING/PURGING PLUG 304 HELIX KIT | 1 |
| 8.1 | | > FILLING/VENTING-PLUG-MVI8/10"-304 | 1 |
| 8.2 | 4032291 | > O-RING 17x3 EPDM KTW/WRC | 1 |
| 9 | 4192148 | SEAL-KIT-HELIX22-36-52 FIRST O/E | 1 |
| 7.3 | 4179571 | > O-RING HOUSING PIPE HELIX22/36/52 VP. | 1 |
| 9.1 | 4179573 | > M.SEAL.HELIX22-36-52 O/E VP. | 1 |
| 10 | 4181154 | HOUSING PIPE D.204X164 1.4307 KIT | 1 |
| 7.3 | 4179571 | > O-RING HOUSING PIPE HELIX22/36/52 VP. | 1 |
| 10.1 | | > HOUSING-PIPE Ø204-M+2201/2202-304 | 1 |
| 11 | 4179143 | CENTERING STAGE-RETURN HELIX22 1.4307 VP | 1 |
| 12 | 4184856 | SHAFT EQUIPMENT HELIX 22 FIRST KIT | 1 |
| 13 | | HYDRAULIC HELIX V 2202 | 1 |
| 14 | 4184857 | SHAFT D.22X251 1.4057 VP. | 1 |
| 15 | 4186357 | EQUIPED HOUSING HELIX OPTI DN50 GJL KIT | 1 |
| 15.1 | | > PUMP CASING MONO.GJL M+8" DN50 DWA | 1 |
| 15.3 | 4106048 | > DRAIN/PRIMING PLUG EPDM HELIX FIRST KIT | 1 |
| 15.3A | | >> DRAIN AND PRIMING PLUG-VMI10"-304 | 1 |
| 15.3B | 4032293 | >> O-RING-10x3-EPDM-KTW/WRC | 1 |

| Item | Article no. | Description | Quantity |
|---|---|---|---|
| 15.3C | 4233957 | >> O-RING ID.9 EPDM VP. | 1 |
| 7.3 | 4179571 | > O-RING HOUSING PIPE HELIX22/36/52 VP. | 1 |

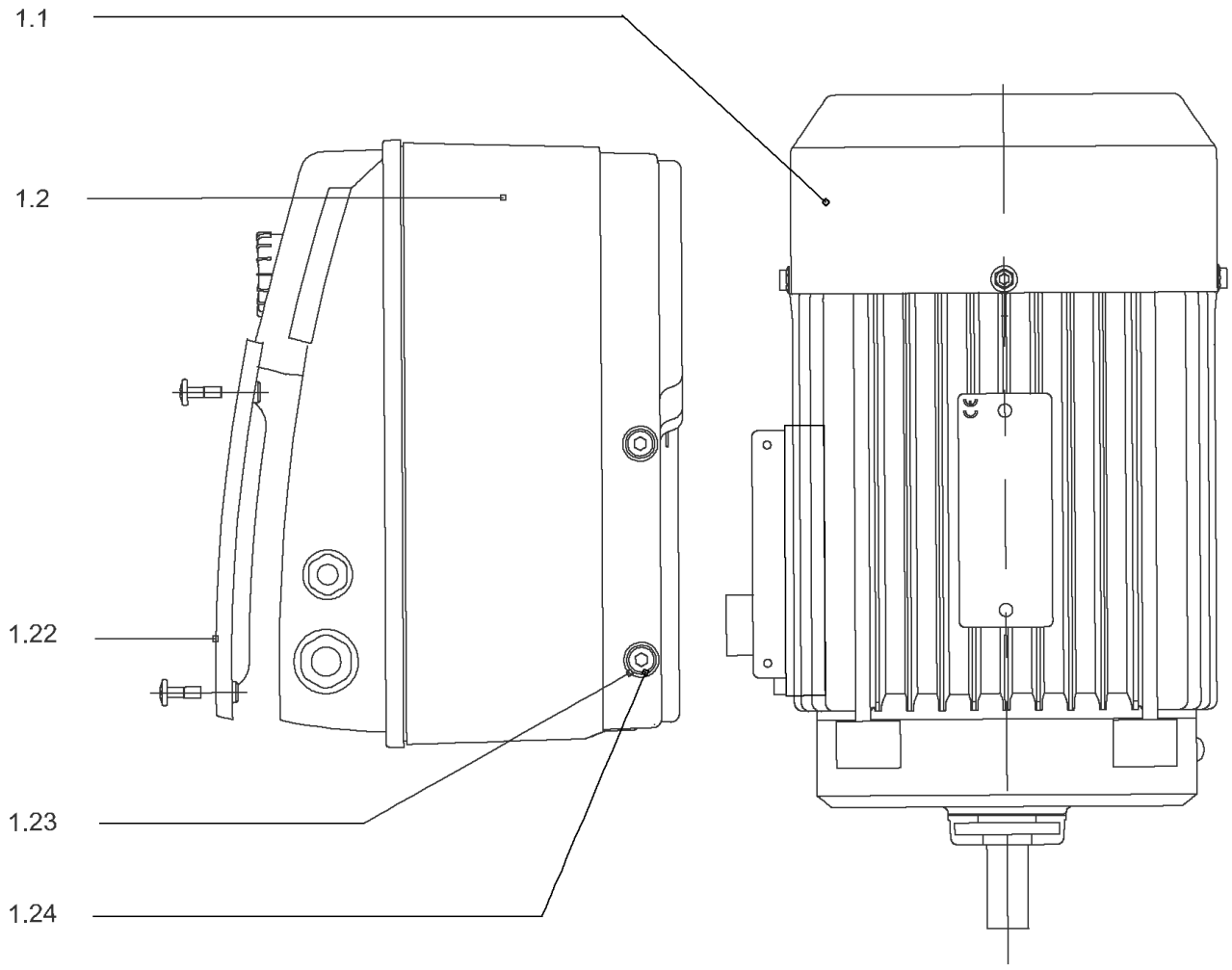
1.1
1.2
1.22
1.23
1.24

## DRIVE HELIX-VE2202-4.0-WE KIT

| Item | Article no. | Description | Quantity |
|---|---|---|---|
| 1.1 | 4188824 | MO.4/2/112 3~380V 60Hz IE2 WE VP. | 1 |
| | | SPARE PARTS MOTOR:ON REQUEST | 1 |
| 1.2 | 4186409 | MODULE HELIX-VE2202-4.0-IE2-WE KIT | 1 |
| 1.22 | 2054227 | > MODULE COVER/GASKET TL3/4 KIT | 1 |
| 1.23 | 4215716 | > SCREW M5X16 DIN912 8.8 A2A (4pieces) VP. | 1 |
| 1.24 | 2057978 | > RONDELLE A5,3 DIN6797 FST ZN (4 PIECES) | 1 |

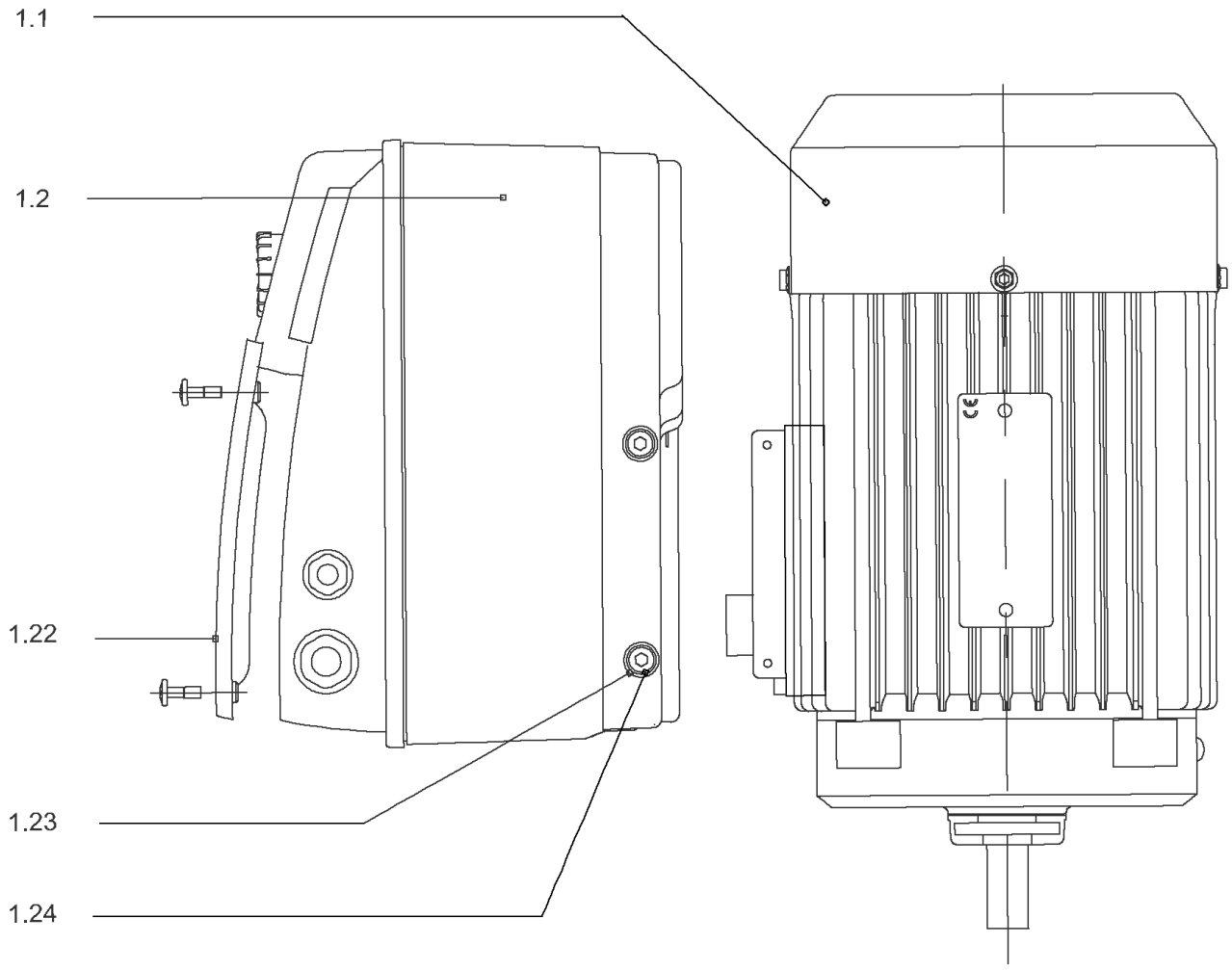
1.1
1.2
1.22
1.23
1.24

## DRIVE HELIX-VE2202-IE2-ATB KIT

| Item | Article no. | Description | Quantity |
|---|---|---|---|
| 1.1 | | MOTOR 4/2/112 3~ 380V 60HZ IE2 ATB VP. | 1 |
| Note: no longer available/nicht mehrlieferbar/n'est plus disponible | | | |
| | | SPARE PARTS MOTOR:ON REQUEST | 1 |
| 1.2 | 4185022 | MODULE HELIX-VE2202-4.0-IE2-ATB KIT | 1 |
| 1.22 | 2054227 | > MODULE COVER/GASKET TL3/4 KIT | 1 |
| 1.23 | 4215716 | > SCREW M5X16 DIN912 8.8 A2A (4pieces) VP. | 1 |
| 1.24 | 2057978 | > RONDELLE A5,3 DIN6797 FST ZN (4 PIECES) | 1 |

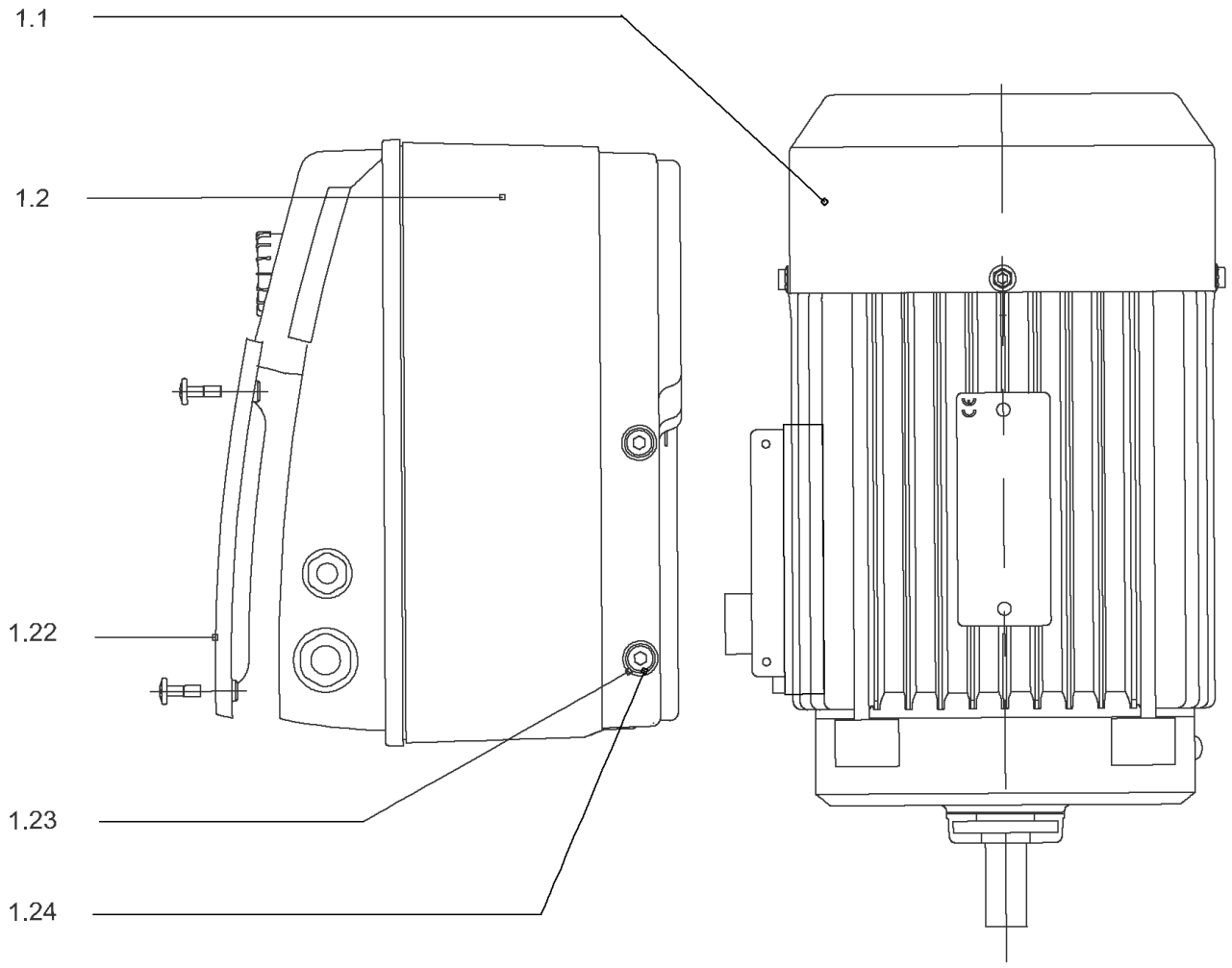
1.1
1.2
1.22
1.23
1.24

## DRIVE HELIX-VE2202-4.0-IE4-WE KIT

| Item | Article no. | Description | Quantity |
|---|---|---|---|
| 1.1 | 4207924 | MOTOR 4/2/112 3~ 380V 60HZ IE4 WE VP. | 1 |
| | | SPARE PARTS MOTOR:ON REQUEST | 1 |
| 1.2 | 4209608 | MODULE HELIX-VE2202-4.0-IE4-WE KIT | 1 |
| 1.22 | 2054227 | > MODULE COVER/GASKET TL3/4 KIT | 1 |
| 1.23 | 4215716 | > SCREW M5X16 DIN912 8.8 A2A (4pieces) VP. | 1 |
| 1.24 | 2057978 | > RONDELLE A5,3 DIN6797 FST ZN (4 PIECES) | 1 |

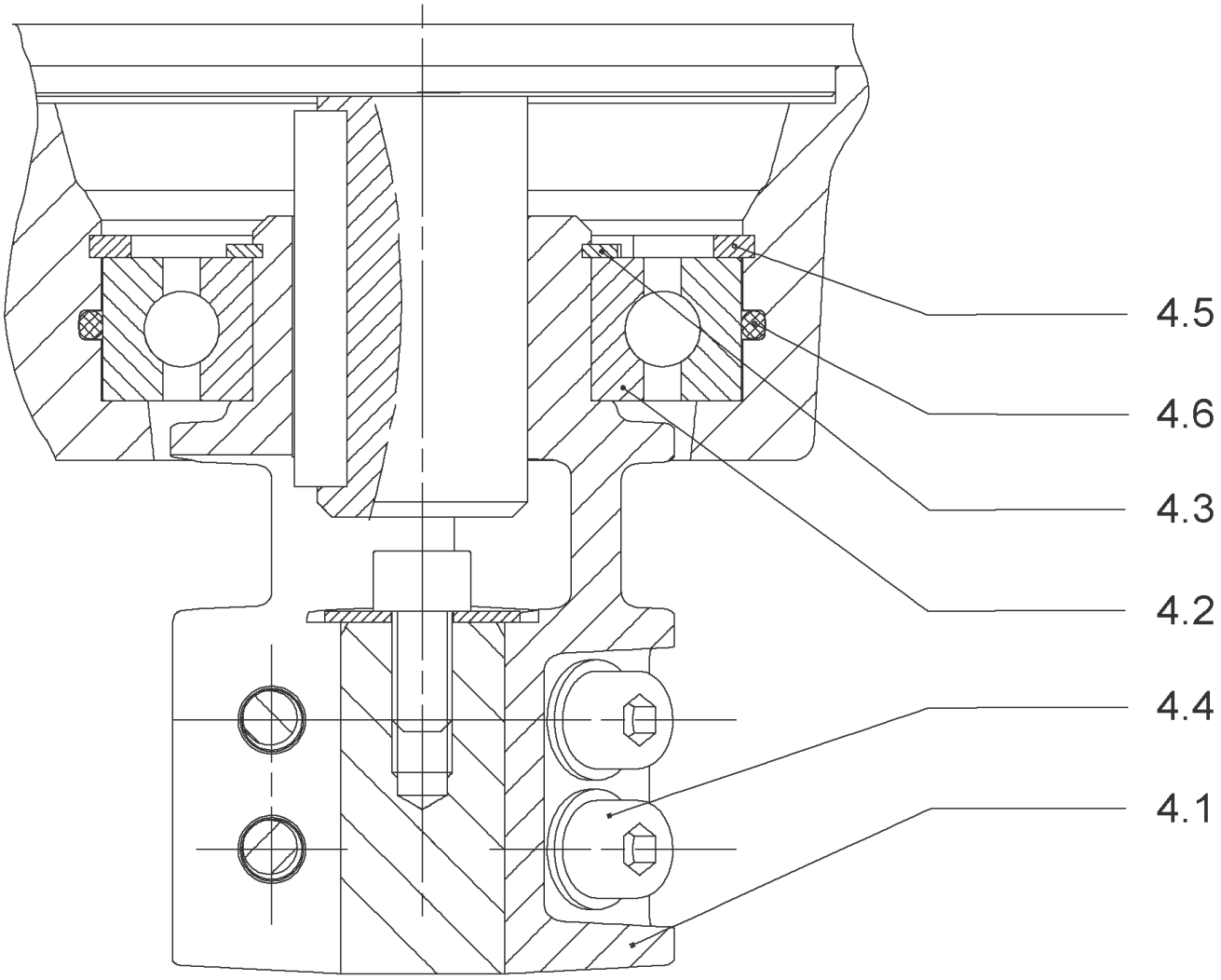
4.5
4.6
4.3
4.2
4.4
4.1

## COUPLING D.22XD.28 FT130 HELIX KIT (4184854)

| Item | Article no. | Description | Quantity |
|---|---|---|---|
| 4.1 | | COUPLING-VMI-Ø22xØ28-FT130-MACHINED | 1 |
| 4.2 | 2131022 | BALL BEARING 6209/ZZ-C3(HT)VP. | 1 |
| 4.3 | 4233930 | CIRCLIP-FOR-BORES-D45x1,75 VP. | 1 |
| 4.4 | 4157726 | SCREW KIT M8X30 (4 PIECES) | 1 |
| 4.5 | 4234252 | CIRCLIPS 85X3 VP. | 1 |
| 4.6 | 4234243 | O-RING 85X3 VP. | 1 |
| | | NOMEL CONTACT WASHER 8x16x1,4 STEEL ZC | 1 |

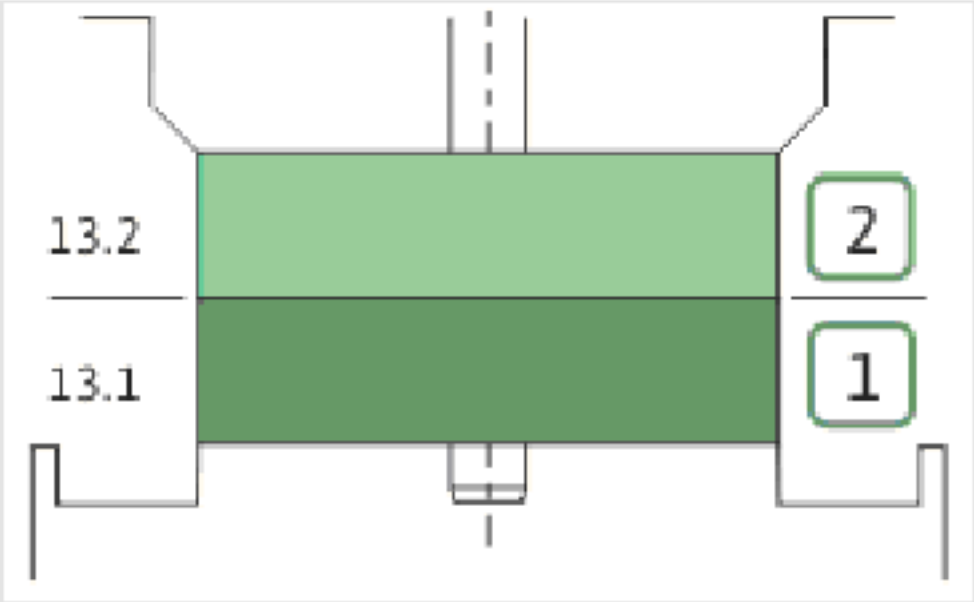
13.2
13.1
2
1

| Item | Article no. | Description | Quantity |
|---|---|---|---|
| 13.1 | 4157739 | FIRST STAGE HELIX 22 1.4307 KIT | 1 |
| | | > IMPELLER-H1-M+22-304 | 1 |
| | | > MACH.STG-CASING-WOGV-WNR-M+22-304 | 1 |
| 13.2 | 4157740 | BEARING STAGE HELIX 22 1.4307 KIT | 1 |
| | | > IMPELLER-H2-M+22-304 | 1 |
| | | > MACH.BEARING-STG-CASING-WNR-M+22-304 | 1 |
| | | > SHAFT-SLEEVE-D26xD22x16-CW | 1 |

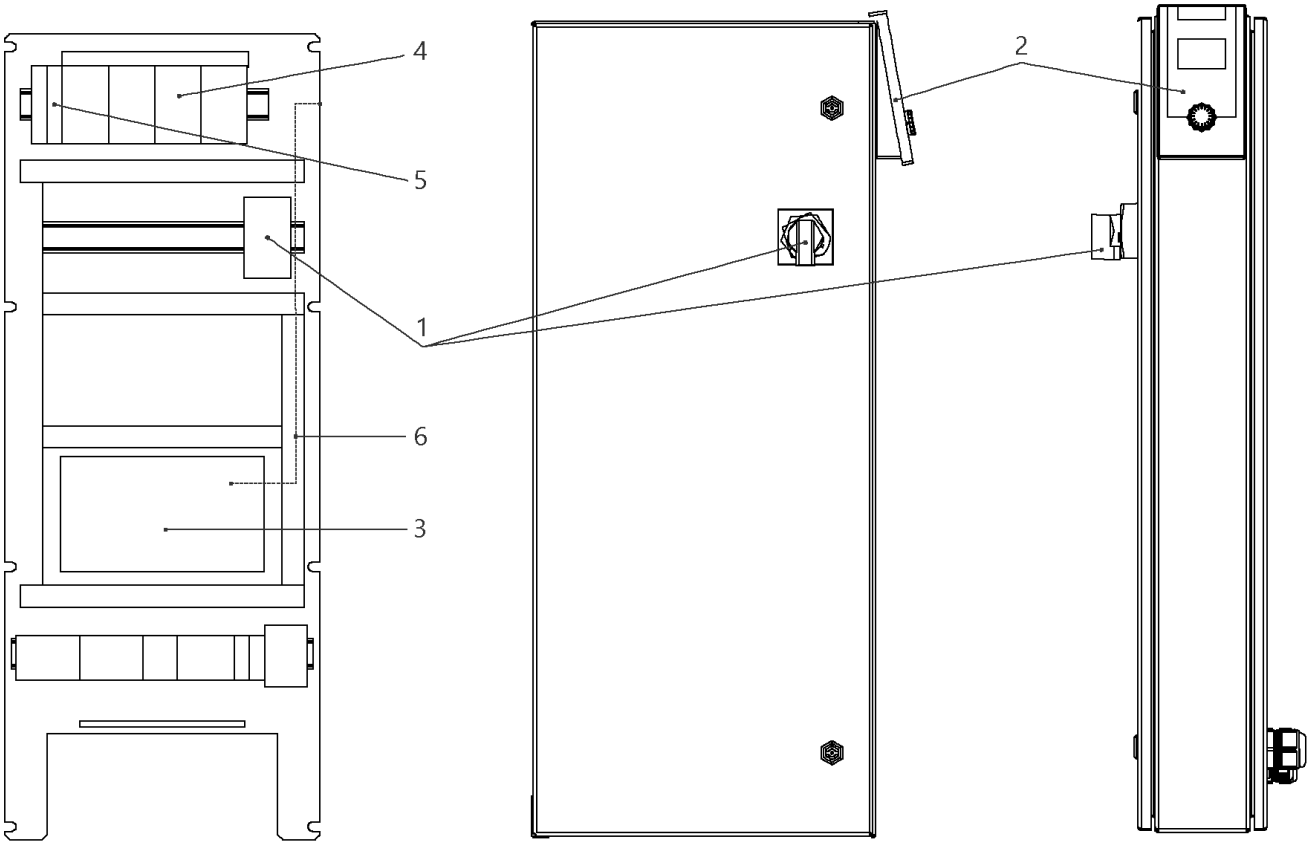
4
5
1
6
3
2

## W-CTRL-SCE-B-2x13A-T34-FM-ND2-AVC-PKG

| Item | Article no. | Description | Quantity |
|---|---|---|---|
| 1 | 2104473 | MAIN SWITCH OT63F3 L105 KIT | 1 |
| Note: TO / BIS / JUSQU'AU 30/06/2015 | | | |
| 1 | 2104470 | MAIN SWITCH OT40F3 L250 KIT | 1 |
| Note: FROM / AB / À PARTIR DU 01/07/2015 | | | |
| 2 | 4184784 | CONTROL PANEL HMI SC KIT | 1 |
| 2 | 4185259 | ASSEMBLY DISPLAY SC PKG VP. | 1 |
| Note: DISPLAY ALONE / PLATINE SEULE | | | |
| 3 | 4185257 | ASSEMBLY CPU SCe Booster VP. | 1 |
| 4 | 2051217 | AUTOM.CIRCUIT BREAKER S203 B16 TO7,5kW | 1 |
| 5 | 2046288 | CIRCUIT BREAKER S201 B16 | 1 |
| 6 | 4194956 | PATCH CABLE RJ45 CAT6 1,0M BLUE SC-PANEL | 1 |

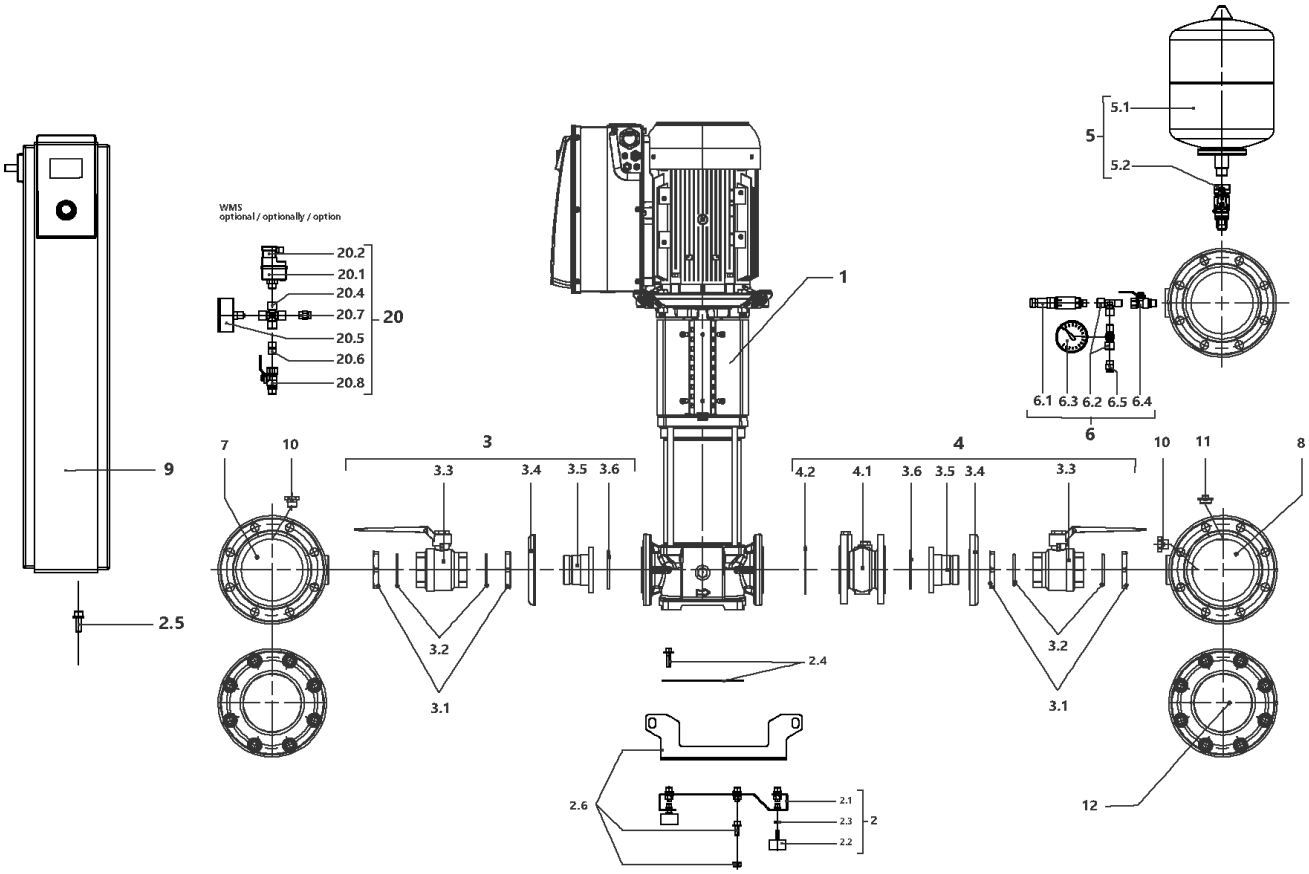
WMS
optional / optionally / option
20.2
20.1
20.4
20.7
20.5
20.6
20.8
20
1
5.1
5
5.2
6.1 6.3 6.2 6.5 6.4
6
9
7
10
3
3.3
3.4
3.5 3.6
4
4.2
4.1
3.6 3.5 3.4
3.3
10
11
8
2.5
3.2
3.1
2.4
3.2
3.1
2.6
2.1
2.3
2.2
2
12

## SiBoost Smart 2HELIX VE2203 (2540902)

| Item | Article no. | Description | Quantity |
|---|---|---|---|
| 1 | | HELIX VE2203-4/16/E/S-FF240 | 1 |
| 2 | 4203977 | BASE PLATE DE2 850x420 M10 KIT | 1 |
| 2.1 | | > BASEPLATE_2x4/6/10/16V_E300_BOX_150 | 1 |
| 2.2 | 2027881 | > VIBRATION DAMPER M.10X20 D.70 | 1 |
| 2.3 | 2028281 | > NUT M10 DIN936 (ISO4035) 17H VZ | 1 |
| 2.4 | 4203978 | > HOLDER PUMP Siboost Helix 22 KIT | 1 |
| 2.5 | 4197084 | > HOLDER SWITCHBOX WILO Smart Control KIT | 1 |
| 2.6 | 4203979 | > LIFTING Siboost HELIX 22/36 KIT | 1 |
| 3 | 4203980 | SUCTION SIDE Siboost Helix 22 KIT | 1 |
| 3.1 | 2028689 | > NUT G2"X14 RG | 1 |
| 3.2 | 2028690 | > O-RING ID.53,35X5,33 EP851 | 1 |
| 3.2 | 2663977 | > BALL VALVE TYP250W IG.2" PN35 GIACOMINI | 1 |
| 3.4 | 2028285 | > LAPPED FLANGE DN50 1.4301 DIN2642P | 1 |
| 3.5 | 4203981 | > UNION INSERT DN50-G2" FLANGE AISI304 VP. | 1 |
| 3.6 | 2029911 | > O-RING ID.69,2X5,33 EPDM 70 SHR | 1 |
| 4 | 4203982 | DELIVERY SIDE Siboost Helix 22 KIT | 1 |
| 3.1 | 2028689 | > NUT G2"X14 RG | 1 |
| 3.2 | 2028690 | > O-RING ID.53,35X5,33 EP851 | 1 |
| 3.3 | 2663977 | > BALL VALVE TYP250W IG.2" PN35 GIACOMINI | 1 |
| 3.4 | 2028285 | > LAPPED FLANGE DN50 1.4301 DIN2642P | 1 |
| 3.5 | 4203981 | > UNION INSERT DN50-G2" FLANGE AISI304 VP. | 1 |
| 3.6 | 2029911 | > O-RING ID.69,2X5,33 EPDM 70 SHR | 1 |
| 4.1 | 2118590 | > NON RETURN VALVE DN50 PN16 VP. | 1 |
| 4.2 | 4202854 | > Flat gasket D61x107x2_DN50_PN25_FIBER VP | 1 |
| 5 | 4203983 | DIAPHREM TANK 8L/PN16 DIN4807/T5 KIT | 1 |
| 5.1 | 2045914 | > DIAPHREM TANK 8L TYP-DD 16BAR | 1 |
| 5.2 | 4189350 | > FLOW FITTING G3/4 FOR DIAPHRAG VESSEL VP | 1 |
| 6 | 4197076 | PRESSURE SENSOR/ GAUGE 0-16BAR KIT | 1 |
| 6.1 | 2085909 | > PRESS.SENSOR 1/4" 0-16BAR 4-20MA VP. | 1 |
| 6.2 | 4197077 | > T-PIECE 1/4" VP. | 1 |
| 6.3 | 2028692 | > PRESSURE GAUGE NG63-PN16-G1/4 | 1 |
| 6.4 | 2028291 | > BALL TAP R1/4" PN42 GIACOMINI R254DL | 1 |
| 6.5 | 2028691 | > BLOWGUN 1/4" MS 30BAR VP. | 1 |
| 7 | 4203984 | PIPE DE2 3"-2x2"+2x1/4x600 VP. | 1 |

| Item | Article no. | Description | Quantity |
|---|---|---|---|
| 8 | 4203985 | PIPE DE2 3"-2x2"+1x1/4+1x3/4x600 VP. | 1 |
| 9 | | W-CTRL-SCE-B-2x13A-T34-FM-ND2-AVC-PKG | 1 |
| 10 | 4197079 | PLUG G1/4"x10 AISI304 KIT | 1 |
| 11 | 2032654 | PLUG R3/4" MS VIEGA 1751 | 1 |
| 20 | | ASSEMBLY WMS. DE-EB. +VP | 1 |
| 20.1 | 2028652 | > PRESSURE SWITCH PS3-ASR 1/(1,3) VP. | 1 |
| 20.2 | 2130983 | > PLUG PS3-415 WITH KABEL 1,5M 2NO VP. | 1 |
| 20.4 | 2028290 | > CROSSPIECE R1/4" MS-NICKEL | 1 |
| 20.5 | 2028687 | > PRESSURE GAUGE NG63 R1/4" HI.0-6BAR | 1 |
| 20.6 | 2054268 | > DUAL NIPPLE G1/4" x G1/4" MS VP. | 1 |
| 20.7 | 2028691 | > BLOWGUN 1/4" MS 30BAR VP. | 1 |
| 20.8 | 2028291 | > BALL TAP R1/4" PN42 GIACOMINI R254DL | 1 |

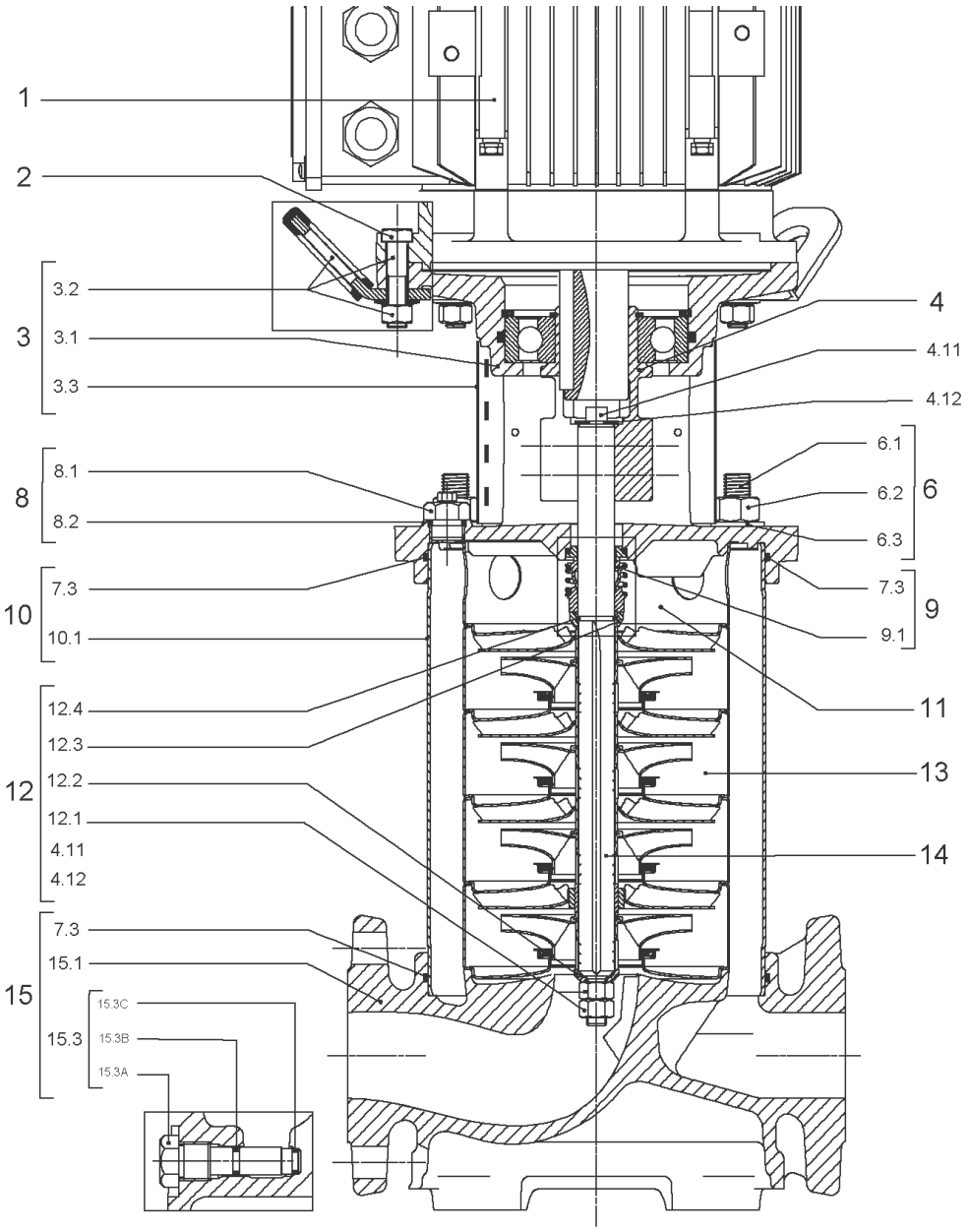
1
2
3
3.2
3.1
3.3
4
4.11
4.12
8
8.1
8.2
6
6.1
6.2
6.3
10
7.3
10.1
9
7.3
9.1
11
12
12.4
12.3
12.2
12.1
4.11
4.12
13
14
15
7.3
15.1
15.3
15.3C
15.3B
15.3A

| Item | Article no. | Description | Quantity |
|---|---|---|---|
| 1 | | DRIVE HELIX-VE2203-FF240-IE2-ATB KIT | 1 |
| Note: MOTOR BRAND ATB | | | |
| 1 | | DRIVE HELIX-VE2203-FF240-IE4-WE KIT | 1 |
| Note: MOTOR BRAND WILO ELEC | | | |
| | | SPARE PARTS MOTOR:ON REQUEST | 1 |
| 2 | 4174093 | SCREW M12X50 (4 PIECES) | 1 |
| 3 | 4186358 | LANTERN HELIX OPTI 8" FF240 KIT | 1 |
| 3.1 | | > M+8_LANTERN_ONE-PIECE_FF240_CATA_DWA | 1 |
| 3.2 | 4186346 | > EYELET CPL.FF240 HELIX (4 PIECES) | 1 |
| 3.3 | 4184853 | > COUPLING PROTECTOR FT HELIX 8'' KIT | 1 |
| 4 | 4186347 | COUPLING D.22XD.38 FF240T130 HELIX KIT | 1 |
| 6 | 4186342 | STUD BOLT M16X253 KIT | 1 |
| 6.1 | | > TIE BOLT M16-253x24x44-1.4057 | 1 |
| 6.2 | 4179562 | > NUT M16 8.8 ISO4032 (4 PIECES) | 1 |
| 6.3 | 4097852 | > WASHER-CS-16.4-32-2.8-NFE25-511-A2 | 1 |
| 8 | 4186377 | FILING/PURGING PLUG 304 HELIX KIT | 1 |
| 8.1 | | > FILLING/VENTING-PLUG-MVI8/10"-304 | 1 |
| 8.2 | 4032291 | > O-RING 17x3 EPDM KTW/WRC | 1 |
| 9 | 4192148 | SEAL-KIT-HELIX22-36-52 FIRST O/E | 1 |
| 7.3 | 4179571 | > O-RING HOUSING PIPE HELIX22/36/52 VP. | 1 |
| 9.1 | 4179573 | > M.SEAL.HELIX22-36-52 O/E VP. | 1 |
| 10 | 4181161 | HOUSING PIPE D.204X214 1.4307 KIT | 1 |
| 10.1 | | > HOUSING-PIPE Ø204-M+2203-304 | 1 |
| 7.3 | 4179571 | > O-RING HOUSING PIPE HELIX22/36/52 VP. | 1 |
| 11 | 4179143 | CENTERING STAGE-RETURN HELIX22 1.4307 VP | 1 |
| 12 | 4184856 | SHAFT EQUIPMENT HELIX 22 FIRST KIT | 1 |
| 13 | | HYDRAULIC HELIX V 2203 | 1 |
| 14 | 4186343 | SHAFT D.22X301 1.4057 VP. | 1 |
| 15 | 4186357 | EQUIPED HOUSING HELIX OPTI DN50 GJL KIT | 1 |
| 15.1 | | > PUMP CASING MONO.GJL M+8" DN50 DWA | 1 |
| 15.3 | 4106048 | > DRAIN/PRIMING PLUG EPDM HELIX FIRST KIT | 1 |
| 15.3A | | >> DRAIN AND PRIMING PLUG-VMI10"-304 | 1 |
| 15.3B | 4032293 | >> O-RING-10x3-EPDM-KTW/WRC | 1 |
| 15.3C | 4233957 | >> O-RING ID.9 EPDM VP. | 1 |

| Item | Article no. | Description | Quantity |
|---|---|---|---|
| 7.3 | 4179571 | > O-RING HOUSING PIPE HELIX22/36/52 VP. | 1 |

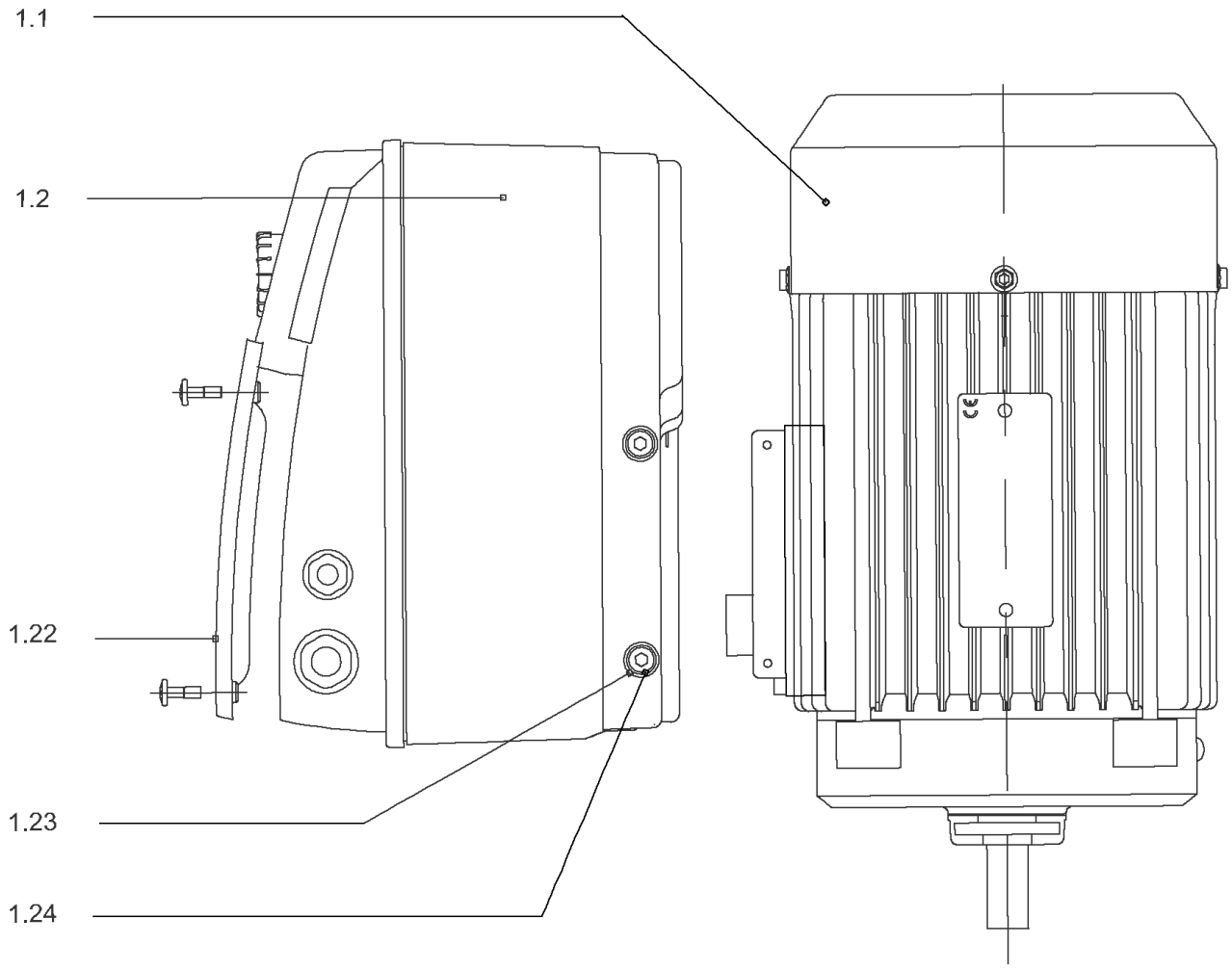
1.1
1.2
1.22
1.23
1.24

## DRIVE HELIX-VE2203-FF240-IE2-ATB KIT

| Item | Article no. | Description | Quantity |
|---|---|---|---|
| 1.1 | | MOTOR 5,5/2/132 FF240 3~380V 60HZ IE2 VP | 1 |
| Note: no longer available/nicht mehrlieferbar/n'est plus disponible | | | |
| | | SPARE PARTS MOTOR:ON REQUEST | 1 |
| 1.2 | 4186782 | MODULE HELIX-VE2203-IE2-ATB KIT | 1 |
| 1.22 | 2111344 | > MODULE COVER/GASKET TL5 KIT | 1 |
| 1.23 | 4215716 | > SCREW M5X16 DIN912 8.8 A2A (4pieces) VP. | 1 |
| 1.24 | 2057978 | > RONDELLE A5,3 DIN6797 FST ZN (4 PIECES) | 1 |

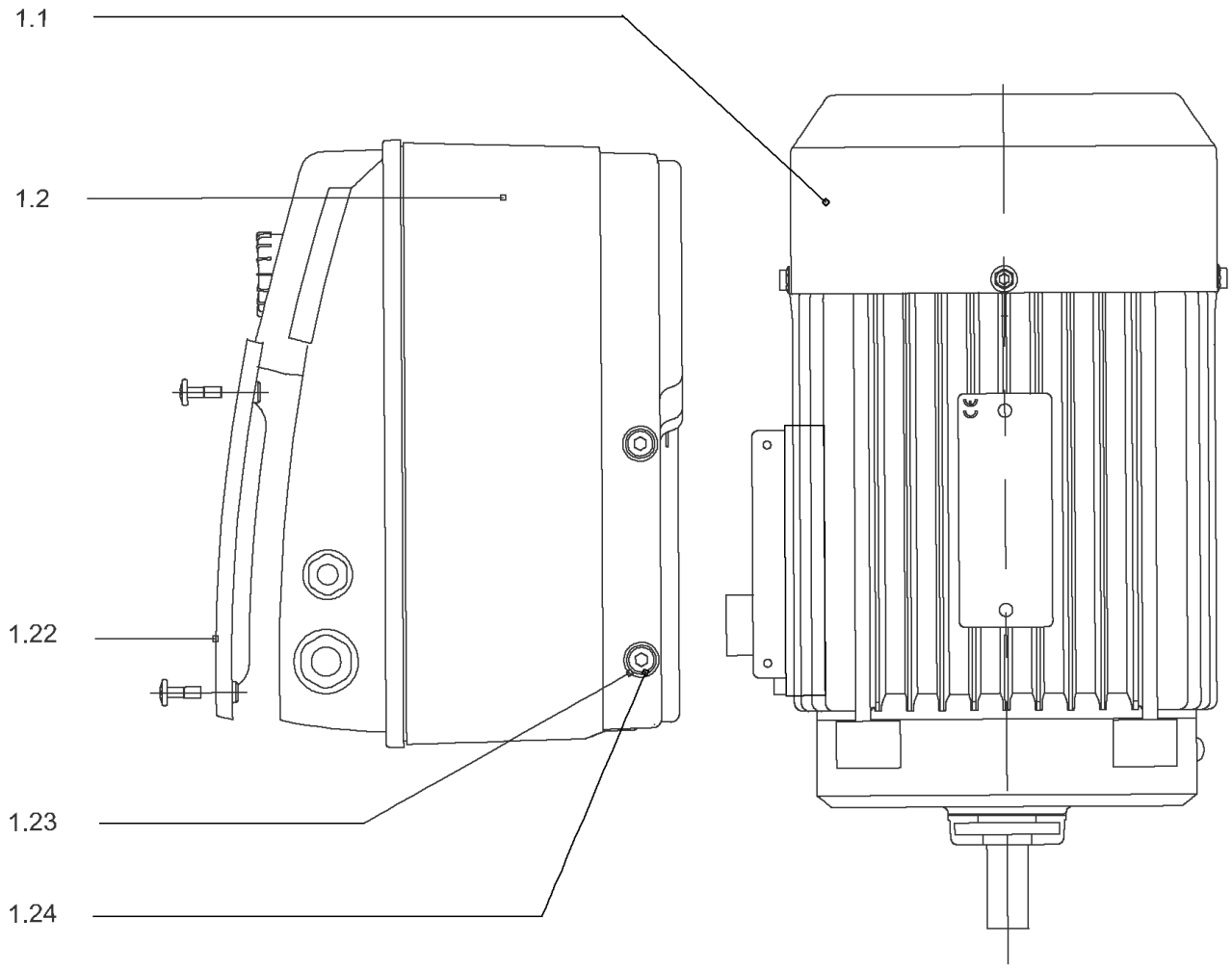
1.1
1.2
1.22
1.23
1.24

## DRIVE HELIX-VE2203-FF240-IE4-WE KIT

| Item | Article no. | Description | Quantity |
|---|---|---|---|
| 1.1 | 4207932 | MO.5.5/2/132FF240 3~380V 60Hz IE4 WE VP. | 1 |
| | | SPARE PARTS MOTOR:ON REQUEST | 1 |
| 1.2 | 4212634 | MODULE HELIX-VE2203-IE4-WE KIT | 1 |
| 1.22 | 2111344 | > MODULE COVER/GASKET TL5 KIT | 1 |
| 1.23 | 4215716 | > SCREW M5X16 DIN912 8.8 A2A (4pieces) VP. | 1 |
| 1.24 | 2057978 | > RONDELLE A5,3 DIN6797 FST ZN (4 PIECES) | 1 |

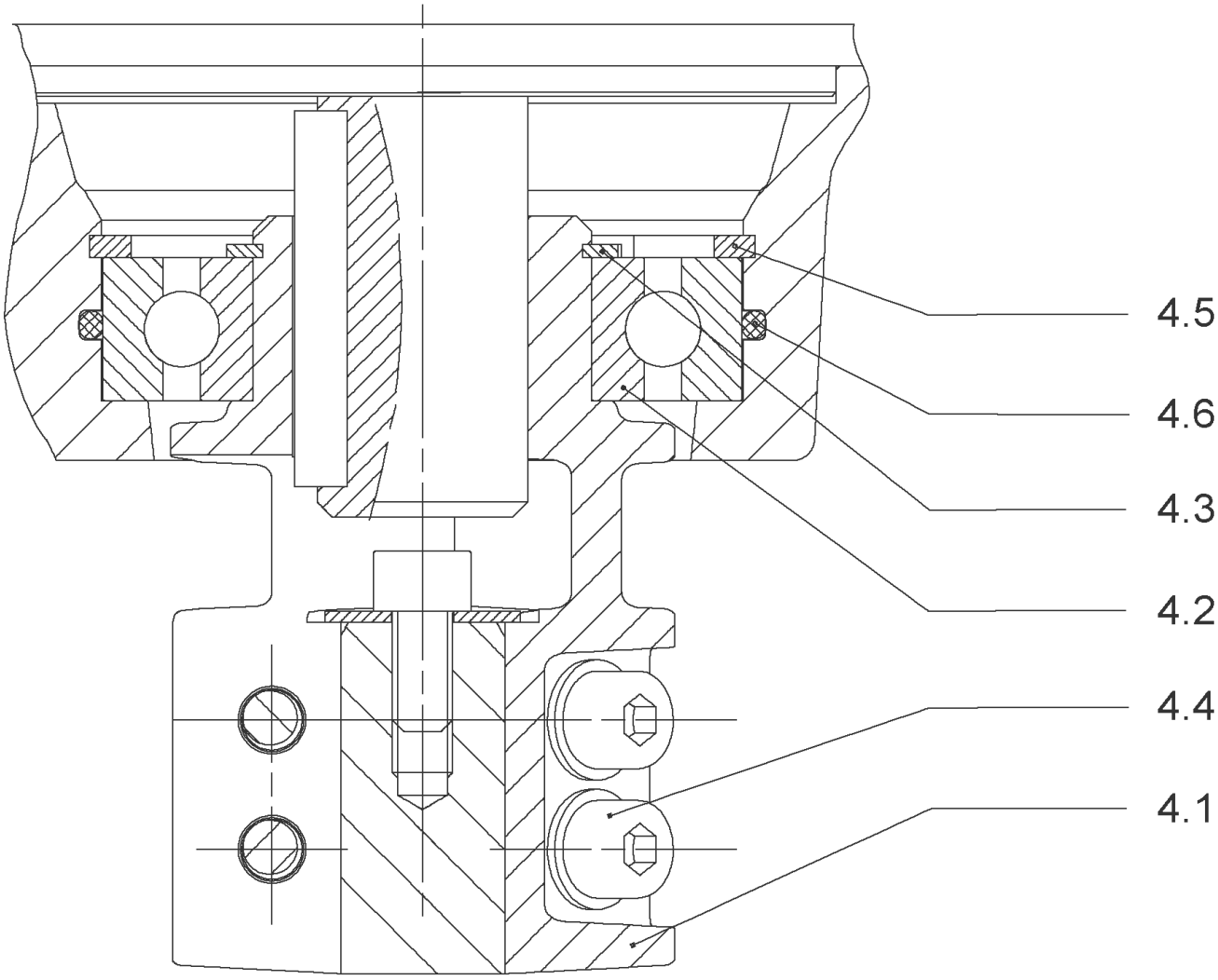
4.5
4.6
4.3
4.2
4.4
4.1

## COUPLING D.22XD.38 FF240T130 HELIX KIT (4186347)

| Item | Article no. | Description | Quantity |
|---|---|---|---|
| 4.1 | | COUPLING-VMI-D22xD38-FF265-MACHINED | 1 |
| 4.2 | 2131017 | BALL BEARING 6310/ZZ-C4(HT)VP. | 1 |
| 4.3 | 4234253 | CIRCLIP-FOR-SHAFT-D50x2 VP. | 1 |
| 4.4 | 4157726 | SCREW KIT M8X30 (4 PIECES) | 1 |
| 4.5 | 4234255 | CIRCLIPS 110X4 VP. | 1 |
| 4.6 | 4233944 | O-RING ID.110 VP. | 1 |
| | | NOMEL CONTACT WASHER 8x16x1,4 STEEL ZC | 1 |

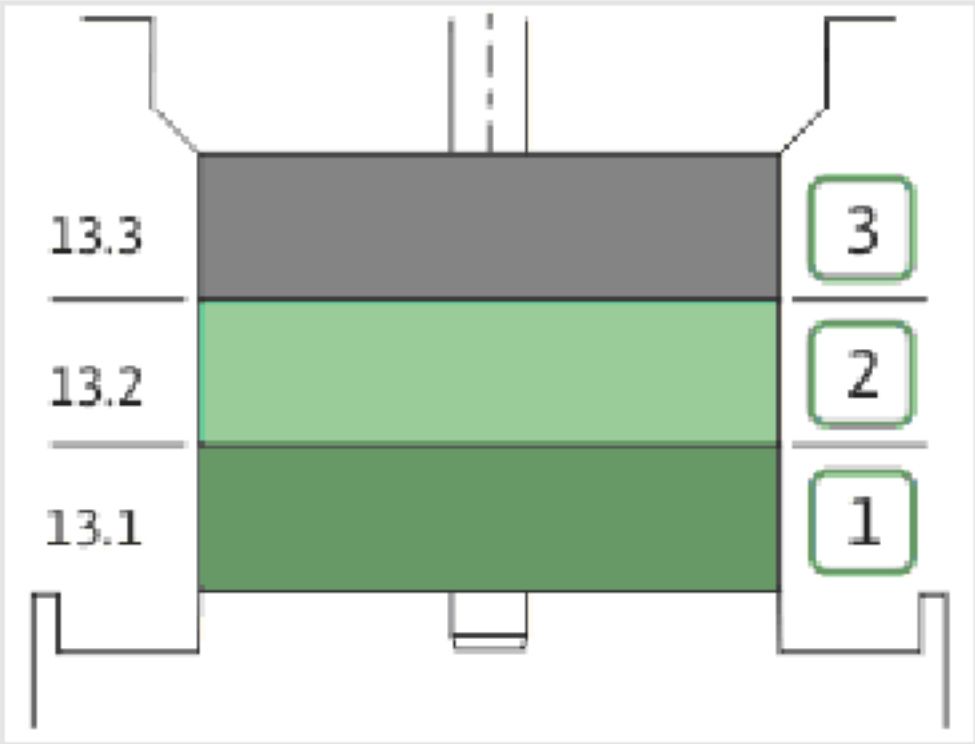
13.3
13.2
13.1
3
2
1

| Item | Article no. | Description | Quantity |
|---|---|---|---|
| 13.1 | 4157739 | FIRST STAGE HELIX 22 1.4307 KIT | 1 |
| | | > IMPELLER-H1-M+22-304 | 1 |
| | | > MACH.STG-CASING-WOGV-WNR-M+22-304 | 1 |
| 13.2 | 4157740 | BEARING STAGE HELIX 22 1.4307 KIT | 1 |
| | | > IMPELLER-H2-M+22-304 | 1 |
| | | > MACH.BEARING-STG-CASING-WNR-M+22-304 | 1 |
| | | > SHAFT-SLEEVE-D26xD22x16-CW | 1 |
| 13.3 | 4157743 | INTERMEDIATE STAGE HELIX 22 KIT | 1 |
| | | > MACH.STD-STG-CASING-WGV+NR-M+22-304 | 1 |
| | | > IMPELLER-H2-M+22-304 | 1 |

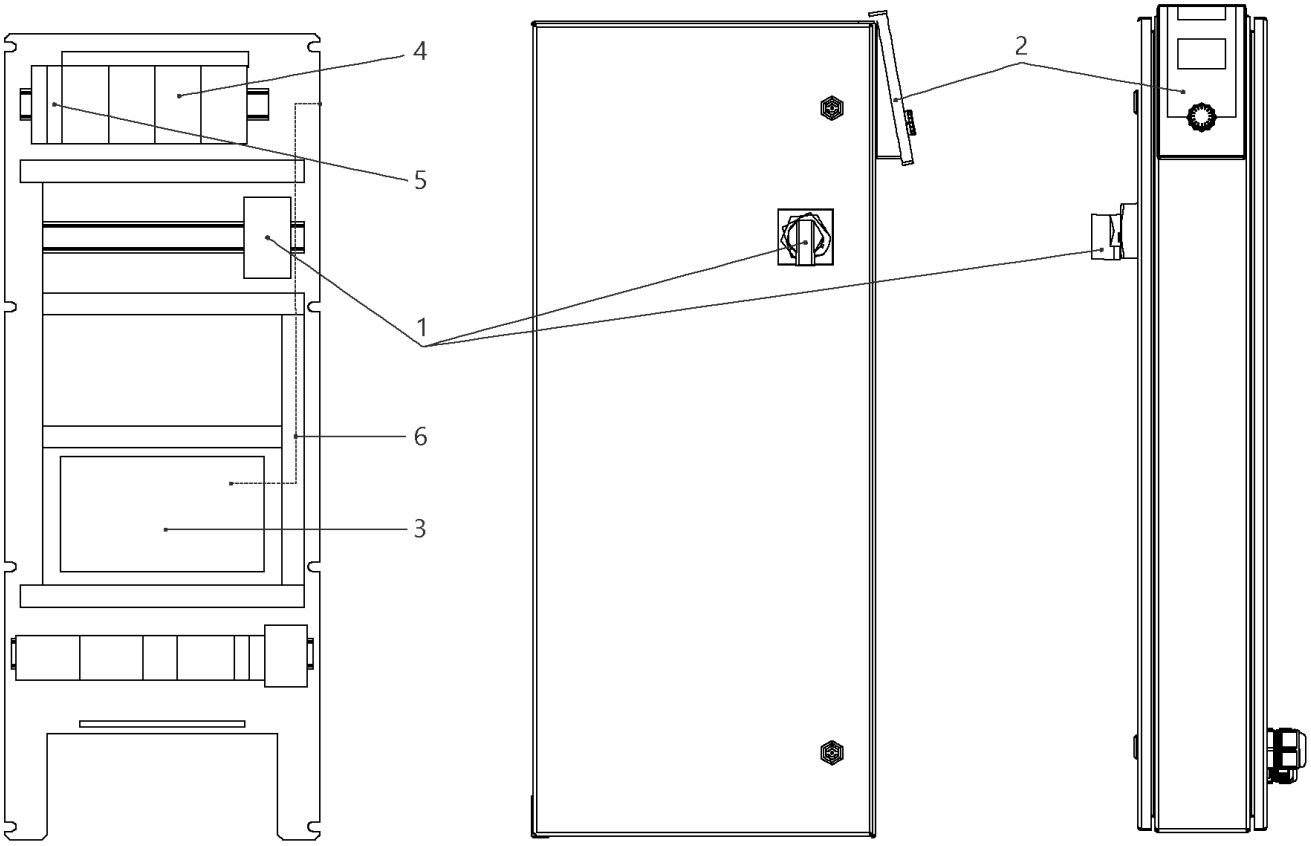
4
5
1
6
3
2

## W-CTRL-SCE-B-2x13A-T34-FM-ND2-AVC-PKG

| Item | Article no. | Description | Quantity |
|---|---|---|---|
| 1 | 2104473 | MAIN SWITCH OT63F3 L105 KIT | 1 |
| Note: TO / BIS / JUSQU'AU 30/06/2015 | | | |
| 1 | 2104470 | MAIN SWITCH OT40F3 L250 KIT | 1 |
| Note: FROM / AB / À PARTIR DU 01/07/2015 | | | |
| 2 | 4184784 | CONTROL PANEL HMI SC KIT | 1 |
| 2 | 4185259 | ASSEMBLY DISPLAY SC PKG VP. | 1 |
| Note: DISPLAY ALONE / PLATINE SEULE | | | |
| 3 | 4185257 | ASSEMBLY CPU SCe Booster VP. | 1 |
| 4 | 2051217 | AUTOM.CIRCUIT BREAKER S203 B16 TO7,5kW | 1 |
| 5 | 2046288 | CIRCUIT BREAKER S201 B16 | 1 |
| 6 | 4194956 | PATCH CABLE RJ45 CAT6 1,0M BLUE SC-PANEL | 1 |

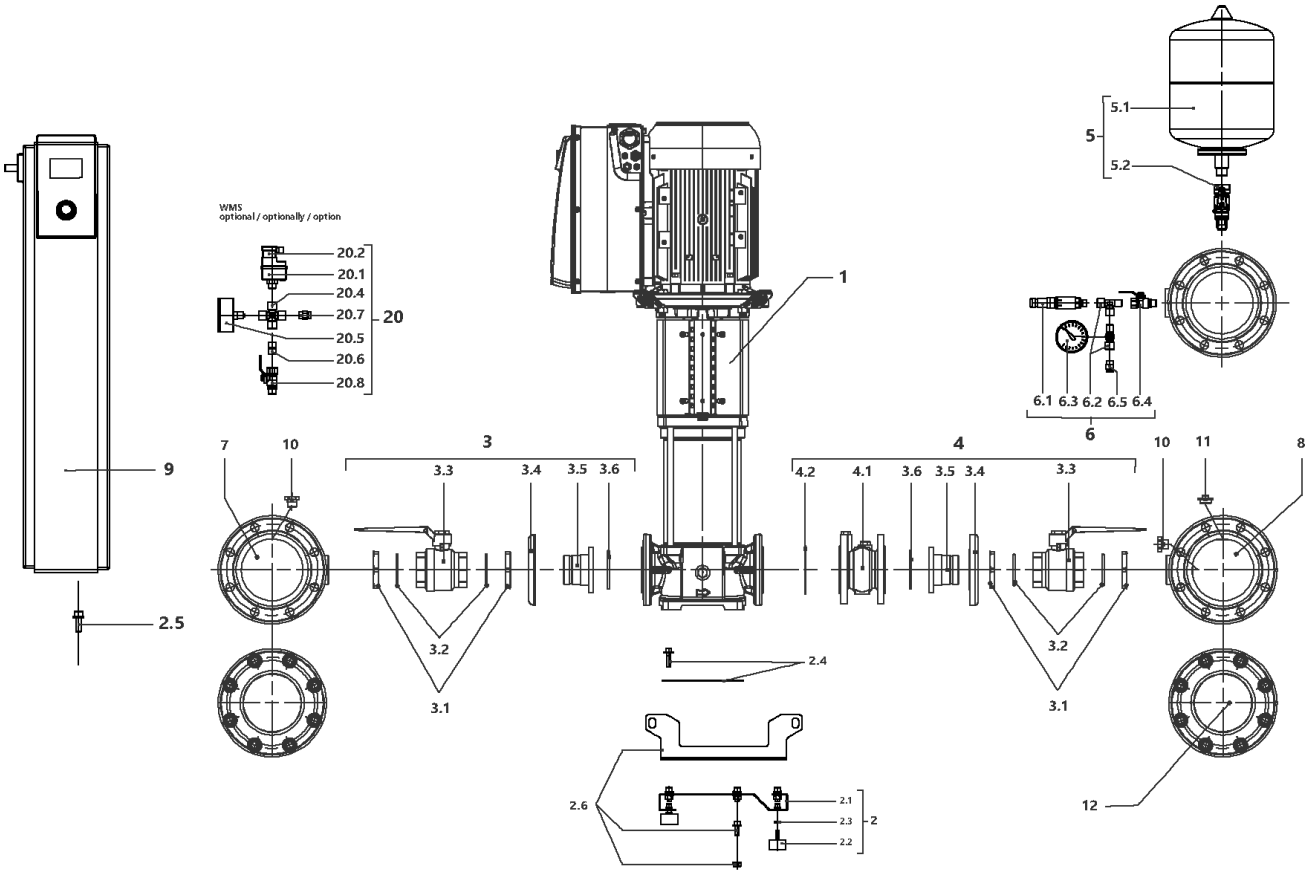
WMS
optional / optionally / option
20.2
20.1
20.4
20.7
20.5
20.6
20.8
20
1
5.1
5
5.2
6.1 6.3 6.2 6.5 6.4
6
9
7
10
3
3.3
3.4
3.5 3.6
4.2
4.1
3.6 3.5 3.4
4
10
11
8
2.5
3.2
3.1
2.4
2.6
2.1
2.3
2.2
2
12

## SiBoost Smart 2HELIX VE2204 (2540903)

| Item | Article no. | Description | Quantity |
|---|---|---|---|
| 1 | | HELIX VE2204-4/16/E/S-FF240 | 1 |
| 2 | 4203977 | BASE PLATE DE2 850x420 M10 KIT | 1 |
| 2.1 | | > BASEPLATE_2x4/6/10/16V_E300_BOX_150 | 1 |
| 2.2 | 2027881 | > VIBRATION DAMPER M.10X20 D.70 | 1 |
| 2.3 | 2028281 | > NUT M10 DIN936 (ISO4035) 17H VZ | 1 |
| 2.4 | 4203978 | > HOLDER PUMP Siboost Helix 22 KIT | 1 |
| 2.5 | 4197084 | > HOLDER SWITCHBOX WILO Smart Control KIT | 1 |
| 2.6 | 4203979 | > LIFTING Siboost HELIX 22/36 KIT | 1 |
| 3 | 4203980 | SUCTION SIDE Siboost Helix 22 KIT | 1 |
| 3.1 | 2028689 | > NUT G2"X14 RG | 1 |
| 3.2 | 2028690 | > O-RING ID.53,35X5,33 EP851 | 1 |
| 3.2 | 2663977 | > BALL VALVE TYP250W IG.2" PN35 GIACOMINI | 1 |
| 3.4 | 2028285 | > LAPPED FLANGE DN50 1.4301 DIN2642P | 1 |
| 3.5 | 4203981 | > UNION INSERT DN50-G2" FLANGE AISI304 VP. | 1 |
| 3.6 | 2029911 | > O-RING ID.69,2X5,33 EPDM 70 SHR | 1 |
| 4 | 4203982 | DELIVERY SIDE Siboost Helix 22 KIT | 1 |
| 3.1 | 2028689 | > NUT G2"X14 RG | 1 |
| 3.2 | 2028690 | > O-RING ID.53,35X5,33 EP851 | 1 |
| 3.3 | 2663977 | > BALL VALVE TYP250W IG.2" PN35 GIACOMINI | 1 |
| 3.4 | 2028285 | > LAPPED FLANGE DN50 1.4301 DIN2642P | 1 |
| 3.5 | 4203981 | > UNION INSERT DN50-G2" FLANGE AISI304 VP. | 1 |
| 3.6 | 2029911 | > O-RING ID.69,2X5,33 EPDM 70 SHR | 1 |
| 4.1 | 2118590 | > NON RETURN VALVE DN50 PN16 VP. | 1 |
| 4.2 | 4202854 | > Flat gasket D61x107x2_DN50_PN25_FIBER VP | 1 |
| 5 | 4203983 | DIAPHREM TANK 8L/PN16 DIN4807/T5 KIT | 1 |
| 5.1 | 2045914 | > DIAPHREM TANK 8L TYP-DD 16BAR | 1 |
| 5.2 | 4189350 | > FLOW FITTING G3/4 FOR DIAPHRAG VESSEL VP | 1 |
| 6 | 4197076 | PRESSURE SENSOR/ GAUGE 0-16BAR KIT | 1 |
| 6.1 | 2085909 | > PRESS.SENSOR 1/4" 0-16BAR 4-20MA VP. | 1 |
| 6.2 | 4197077 | > T-PIECE 1/4" VP. | 1 |
| 6.3 | 2028692 | > PRESSURE GAUGE NG63-PN16-G1/4 | 1 |
| 6.4 | 2028291 | > BALL TAP R1/4" PN42 GIACOMINI R254DL | 1 |
| 6.5 | 2028691 | > BLOWGUN 1/4" MS 30BAR VP. | 1 |
| 7 | 4203984 | PIPE DE2 3"-2x2"+2x1/4x600 VP. | 1 |

| Item | Article no. | Description | Quantity |
|---|---|---|---|
| 8 | 4203985 | PIPE DE2 3"-2x2"+1x1/4+1x3/4x600 VP. | 1 |
| 9 | | W-CTRL-SCE-B-2x16A-T34-FM-ND2-AVC-PKG | 1 |
| 10 | 4197079 | PLUG G1/4"x10 AISI304 KIT | 1 |
| 11 | 2032654 | PLUG R3/4" MS VIEGA 1751 | 1 |
| 20 | | ASSEMBLY WMS. DE-EB. +VP | 1 |
| 20.1 | 2028652 | > PRESSURE SWITCH PS3-ASR 1/(1,3) VP. | 1 |
| 20.2 | 2130983 | > PLUG PS3-415 WITH KABEL 1,5M 2NO VP. | 1 |
| 20.4 | 2028290 | > CROSSPIECE R1/4" MS-NICKEL | 1 |
| 20.5 | 2028687 | > PRESSURE GAUGE NG63 R1/4" HI.0-6BAR | 1 |
| 20.6 | 2054268 | > DUAL NIPPLE G1/4" x G1/4" MS VP. | 1 |
| 20.7 | 2028691 | > BLOWGUN 1/4" MS 30BAR VP. | 1 |
| 20.8 | 2028291 | > BALL TAP R1/4" PN42 GIACOMINI R254DL | 1 |

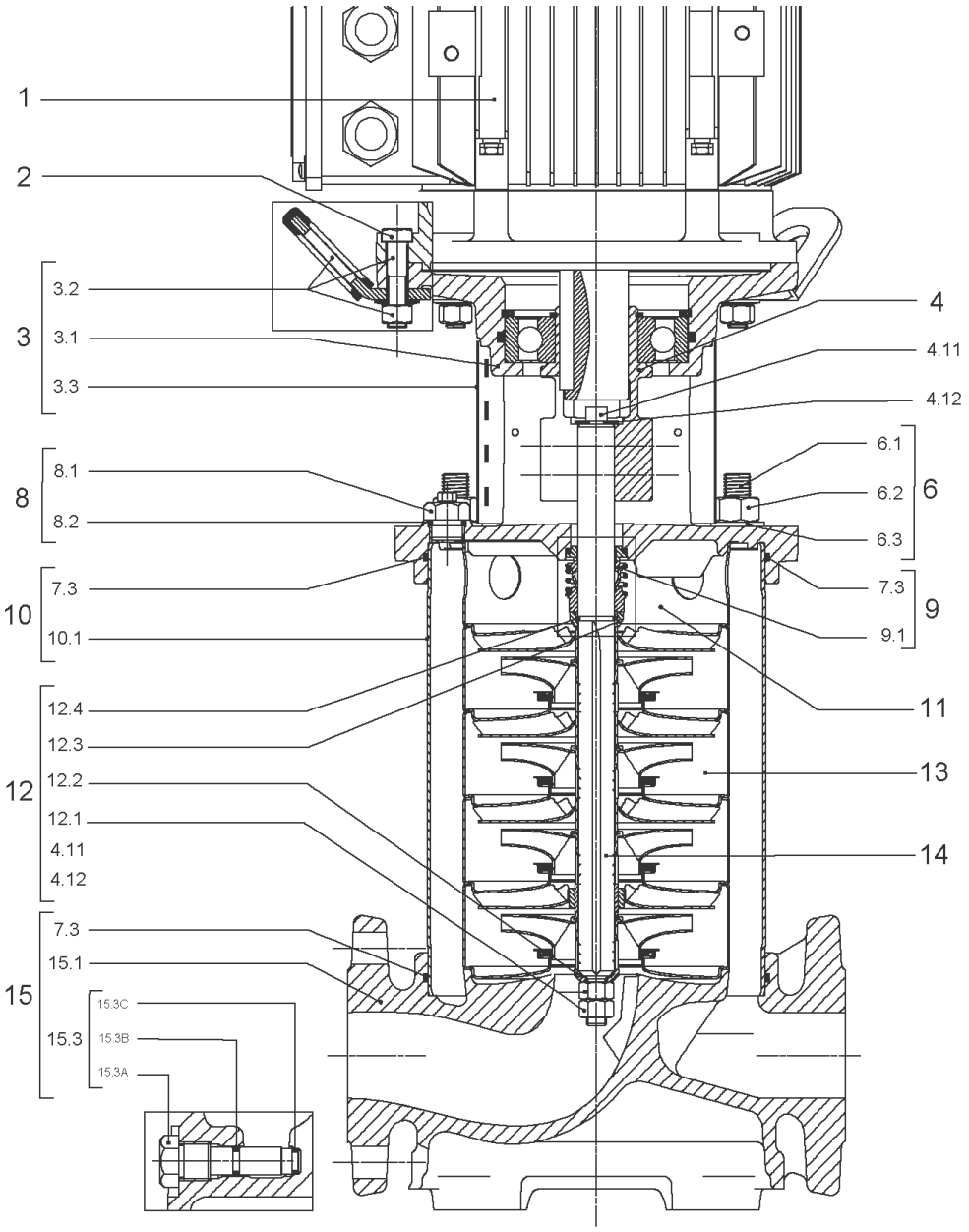
1
2
3
3.2
3.1
3.3
4
4.11
4.12
8
8.1
8.2
6
6.1
6.2
6.3
10
7.3
10.1
9
7.3
9.1
11
12
12.4
12.3
12.2
12.1
4.11
4.12
13
14
15
7.3
15.1
15.3
15.3C
15.3B
15.3A

| Item | Article no. | Description | Quantity |
|---|---|---|---|
| 1 | | DRIVE HELIX-VE2204-FF240-IE2-ATB KIT | 1 |
| Note: MOTOR BRAND ATB | | | |
| 1 | | DRIVE HELIX-VE2204-FF240-IE4-WE KIT | 1 |
| Note: MOTOR BRAND WILO ELEC | | | |
| | | SPARE PARTS MOTOR:ON REQUEST | 1 |
| 2 | 4174093 | SCREW M12X50 (4 PIECES) | 1 |
| 3 | 4186358 | LANTERN HELIX OPTI 8" FF240 KIT | 1 |
| 3.1 | | > M+8_LANTERN_ONE-PIECE_FF240_CATA_DWA | 1 |
| 3.2 | 4186346 | > EYELET CPL.FF240 HELIX (4 PIECES) | 1 |
| 3.3 | 4184853 | > COUPLING PROTECTOR FT HELIX 8'' KIT | 1 |
| 4 | 4186347 | COUPLING D.22XD.38 FF240T130 HELIX KIT | 1 |
| 6 | 4179581 | STUD BOLT M16X305.5 KIT | 1 |
| 6.1 | | > TIE BOLT M16-305.5x24x44-1.4057 | 1 |
| 6.2 | 4179562 | > NUT M16 8.8 ISO4032 (4 PIECES) | 1 |
| 6.3 | 4097852 | > WASHER-CS-16.4-32-2.8-NFE25-511-A2 | 1 |
| 8 | 4186377 | FILING/PURGING PLUG 304 HELIX KIT | 1 |
| 8.1 | | > FILLING/VENTING-PLUG-MVI8/10"-304 | 1 |
| 8.2 | 4032291 | > O-RING 17x3 EPDM KTW/WRC | 1 |
| 9 | 4192148 | SEAL-KIT-HELIX22-36-52 FIRST O/E | 1 |
| 7.3 | 4179571 | > O-RING HOUSING PIPE HELIX22/36/52 VP. | 1 |
| 9.1 | 4179573 | > M.SEAL.HELIX22-36-52 O/E VP. | 1 |
| 10 | 4181077 | HOUSING-PIPE D.204X264 1.4307 KIT | 1 |
| 7.3 | 4179571 | > O-RING HOUSING PIPE HELIX22/36/52 VP. | 1 |
| 10.1 | | > HOUSING-PIPE Ø204-M+2204/3603-304 | 1 |
| 11 | 4179143 | CENTERING STAGE-RETURN HELIX22 1.4307 VP | 1 |
| 12 | 4184856 | SHAFT EQUIPMENT HELIX 22 FIRST KIT | 1 |
| 13 | | HYDRAULIC HELIX V 2204 | 1 |
| 14 | 4186344 | SHAFT D.22X351 1.4057 VP. | 1 |
| 15 | 4186357 | EQUIPED HOUSING HELIX OPTI DN50 GJL KIT | 1 |
| 15.1 | | > PUMP CASING MONO.GJL M+8" DN50 DWA | 1 |
| 15.3 | 4106048 | > DRAIN/PRIMING PLUG EPDM HELIX FIRST KIT | 1 |
| 15.3A | | >> DRAIN AND PRIMING PLUG-VMI10"-304 | 1 |
| 15.3B | 4032293 | >> O-RING-10x3-EPDM-KTW/WRC | 1 |
| 15.3C | 4233957 | >> O-RING ID.9 EPDM VP. | 1 |

| Item | Article no. | Description | Quantity |
|---|---|---|---|
| 7.3 | 4179571 | > O-RING HOUSING PIPE HELIX22/36/52 VP. | 1 |

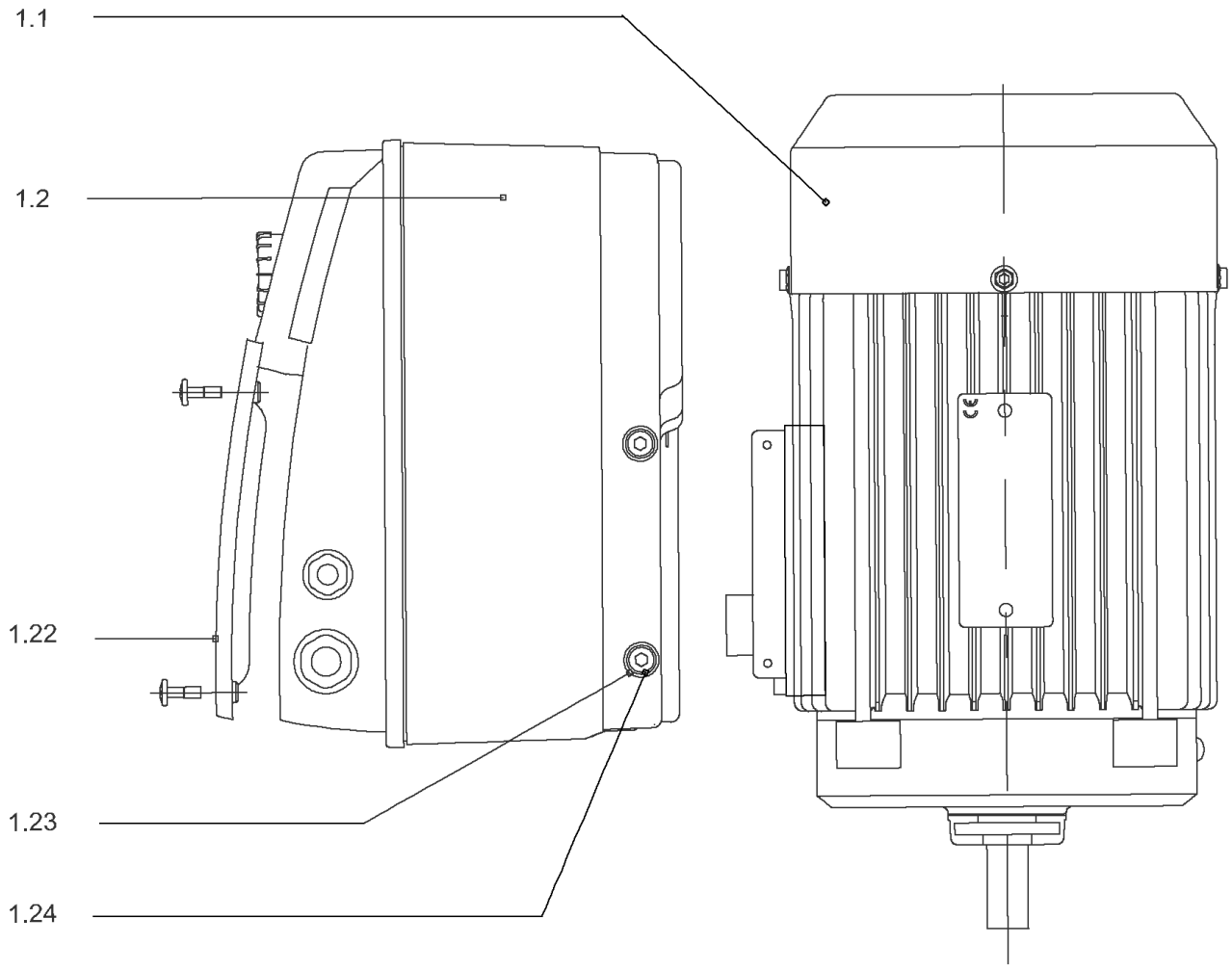
1.1
1.2
1.22
1.23
1.24

## DRIVE HELIX-VE2204-FF240-IE2-ATB KIT

| Item | Article no. | Description | Quantity |
|---|---|---|---|
| 1.1 | | MOTOR 7,5/2/132 FF240 3~380V 60HZ IE2 VP | 1 |
| Note: no longer available/nicht mehrlieferbar/n'est plus disponible | | | |
| | | SPARE PARTS MOTOR:ON REQUEST | 1 |
| 1.2 | 4144857 | MODULE HELIX-VE2204-IE2-ATB KIT | 1 |
| 1.22 | 2111344 | > MODULE COVER/GASKET TL5 KIT | 1 |
| 1.23 | 4215716 | > SCREW M5X16 DIN912 8.8 A2A (4pieces) VP. | 1 |
| 1.24 | 2057978 | > RONDELLE A5,3 DIN6797 FST ZN (4 PIECES) | 1 |

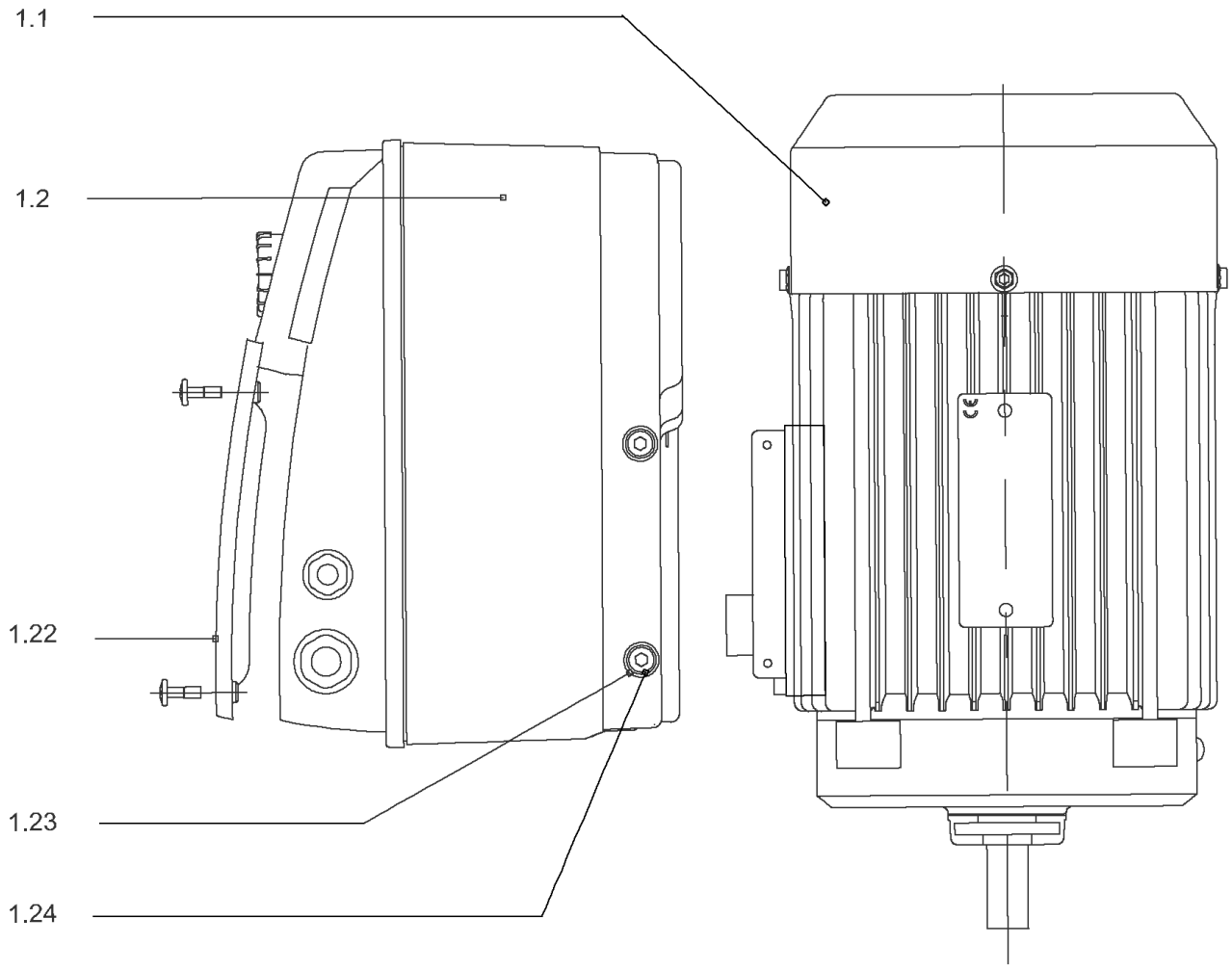
1.1
1.2
1.22
1.23
1.24

## DRIVE HELIX-VE2204-FF240-IE4-WE KIT

| Item | Article no. | Description | Quantity |
|---|---|---|---|
| 1.1 | 4207940 | MO.7.5/2/132FF240 3~380V 60Hz IE4 WE VP. | 1 |
| | | SPARE PARTS MOTOR:ON REQUEST | 1 |
| 1.2 | 4212639 | MODULE HELIX-VE2204-IE4-WE KIT | 1 |
| 1.22 | 2111344 | > MODULE COVER/GASKET TL5 KIT | 1 |
| 1.23 | 4215716 | > SCREW M5X16 DIN912 8.8 A2A (4pieces) VP. | 1 |
| 1.24 | 2057978 | > RONDELLE A5,3 DIN6797 FST ZN (4 PIECES) | 1 |

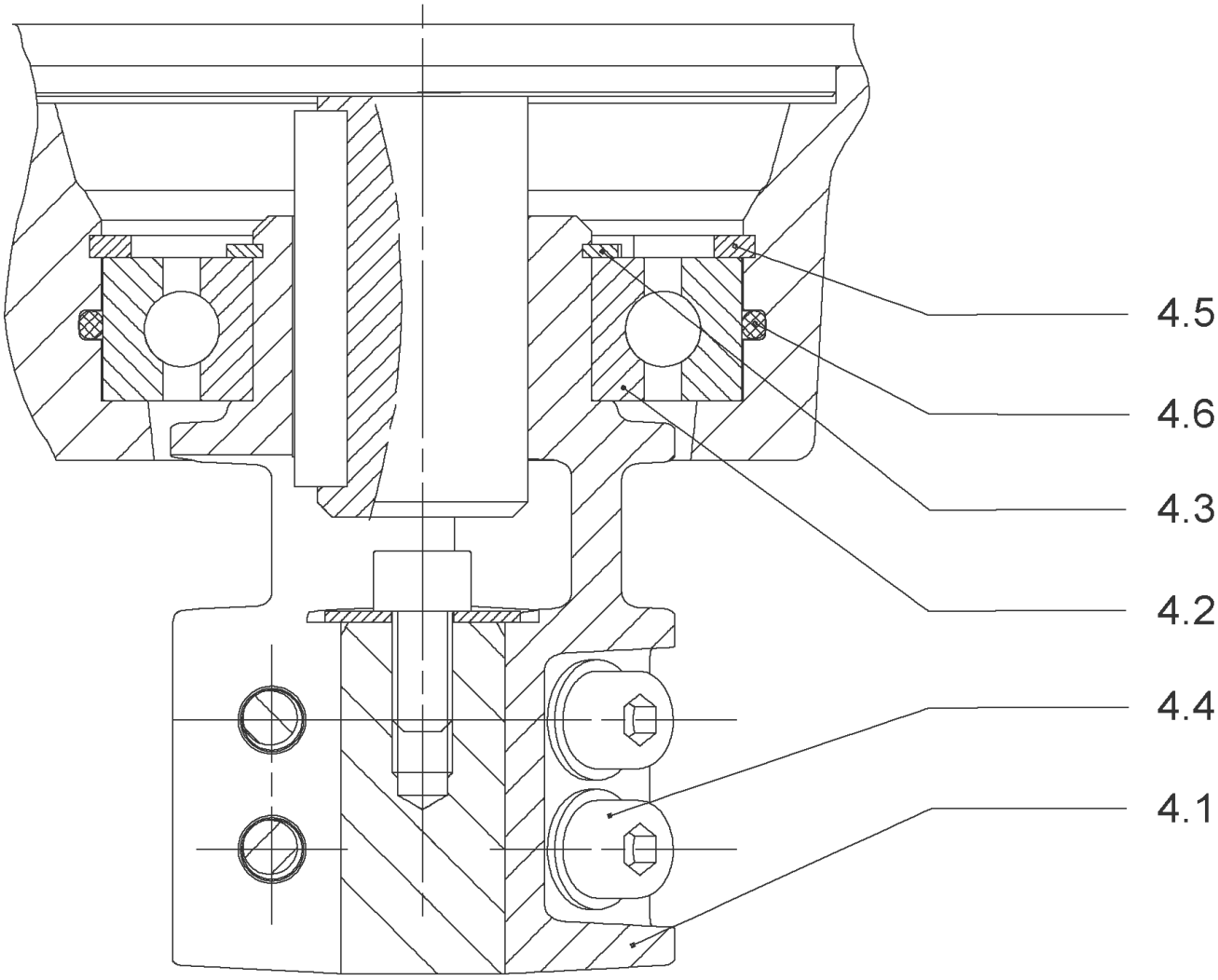
4.5
4.6
4.3
4.2
4.4
4.1

## COUPLING D.22XD.38 FF240T130 HELIX KIT (4186347)

| Item | Article no. | Description | Quantity |
|---|---|---|---|
| 4.1 | | COUPLING-VMI-D22xD38-FF265-MACHINED | 1 |
| 4.2 | 2131017 | BALL BEARING 6310/ZZ-C4(HT)VP. | 1 |
| 4.3 | 4234253 | CIRCLIP-FOR-SHAFT-D50x2 VP. | 1 |
| 4.4 | 4157726 | SCREW KIT M8X30 (4 PIECES) | 1 |
| 4.5 | 4234255 | CIRCLIPS 110X4 VP. | 1 |
| 4.6 | 4233944 | O-RING ID.110 VP. | 1 |
| | | NOMEL CONTACT WASHER 8x16x1,4 STEEL ZC | 1 |

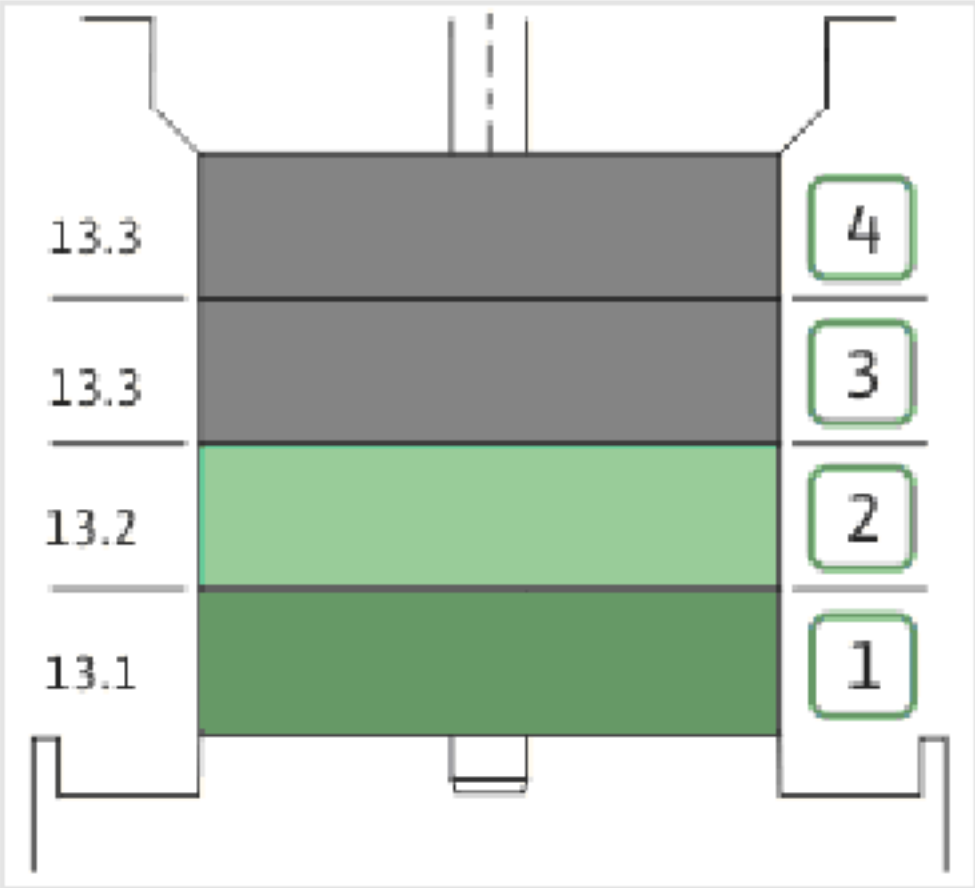
13.3
13.3
13.2
13.1
4
3
2
1

| Item | Article no. | Description | Quantity |
|---|---|---|---|
| 13.1 | 4157739 | FIRST STAGE HELIX 22 1.4307 KIT | 1 |
| | | > IMPELLER-H1-M+22-304 | 1 |
| | | > MACH.STG-CASING-WOGV-WNR-M+22-304 | 1 |
| 13.2 | 4157740 | BEARING STAGE HELIX 22 1.4307 KIT | 1 |
| | | > IMPELLER-H2-M+22-304 | 1 |
| | | > MACH.BEARING-STG-CASING-WNR-M+22-304 | 1 |
| | | > SHAFT-SLEEVE-D26xD22x16-CW | 1 |
| 13.3 | 4157743 | INTERMEDIATE STAGE HELIX 22 KIT | 1 |
| | | > MACH.STD-STG-CASING-WGV+NR-M+22-304 | 1 |
| | | > IMPELLER-H2-M+22-304 | 1 |

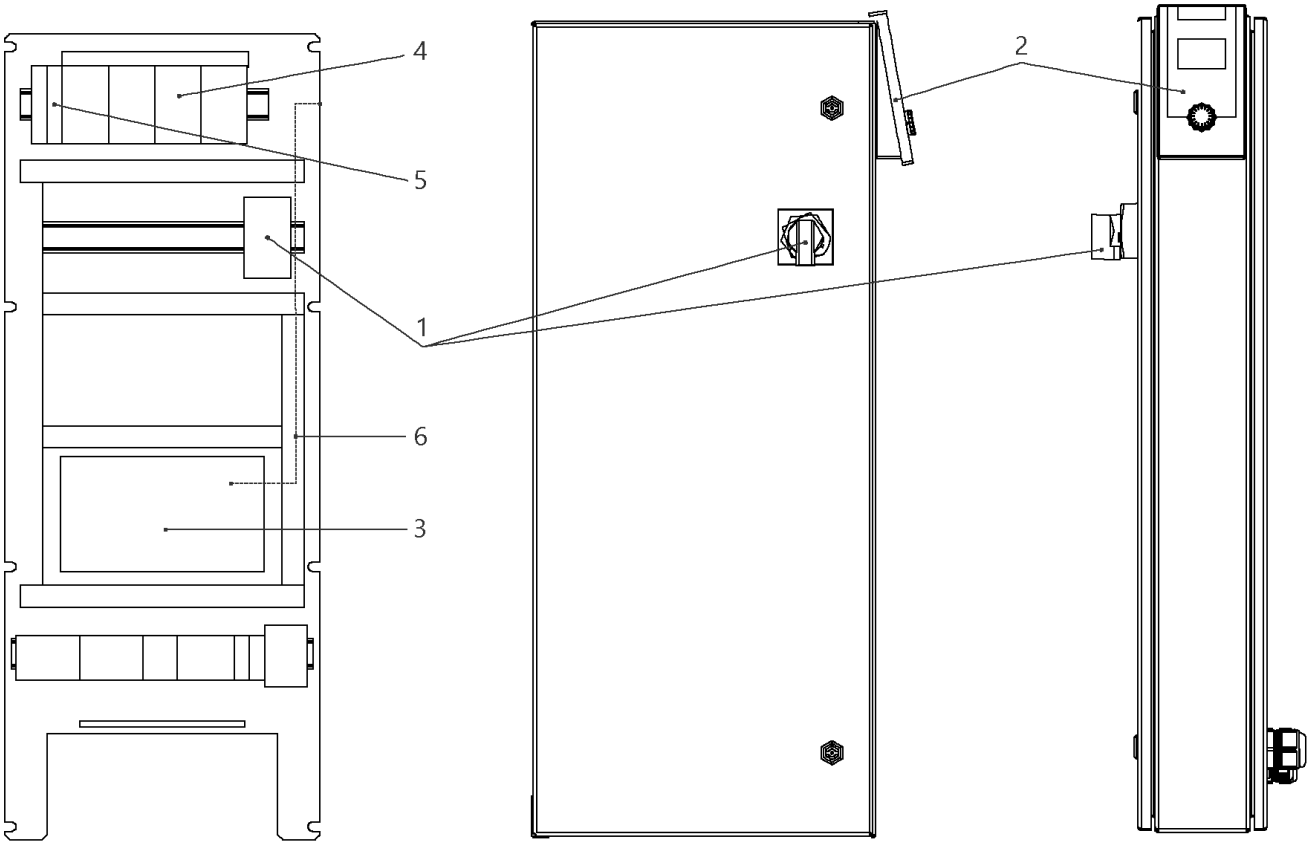
4
5
1
6
3
2

## W-CTRL-SCE-B-2x16A-T34-FM-ND2-AVC-PKG

| Item | Article no. | Description | Quantity |
|---|---|---|---|
| 1 | 2104473 | MAIN SWITCH OT63F3 L105 KIT | 1 |
| Note: TO / BIS / JUSQU'AU 30/06/2015 | | | |
| 1 | 2104470 | MAIN SWITCH OT40F3 L250 KIT | 1 |
| Note: FROM / AB / À PARTIR DU 01/07/2015 | | | |
| 2 | 4184784 | CONTROL PANEL HMI SC KIT | 1 |
| 2 | 4185259 | ASSEMBLY DISPLAY SC PKG VP. | 1 |
| Note: DISPLAY ALONE / PLATINE SEULE | | | |
| 3 | 4185257 | ASSEMBLY CPU SCe Booster VP. | 1 |
| 4 | 4197832 | AUTOMATIC CIRCUIT BREAKER S203 B20 VP. | 1 |
| 5 | 2046288 | CIRCUIT BREAKER S201 B16 | 1 |
| 6 | 4194956 | PATCH CABLE RJ45 CAT6 1,0M BLUE SC-PANEL | 1 |

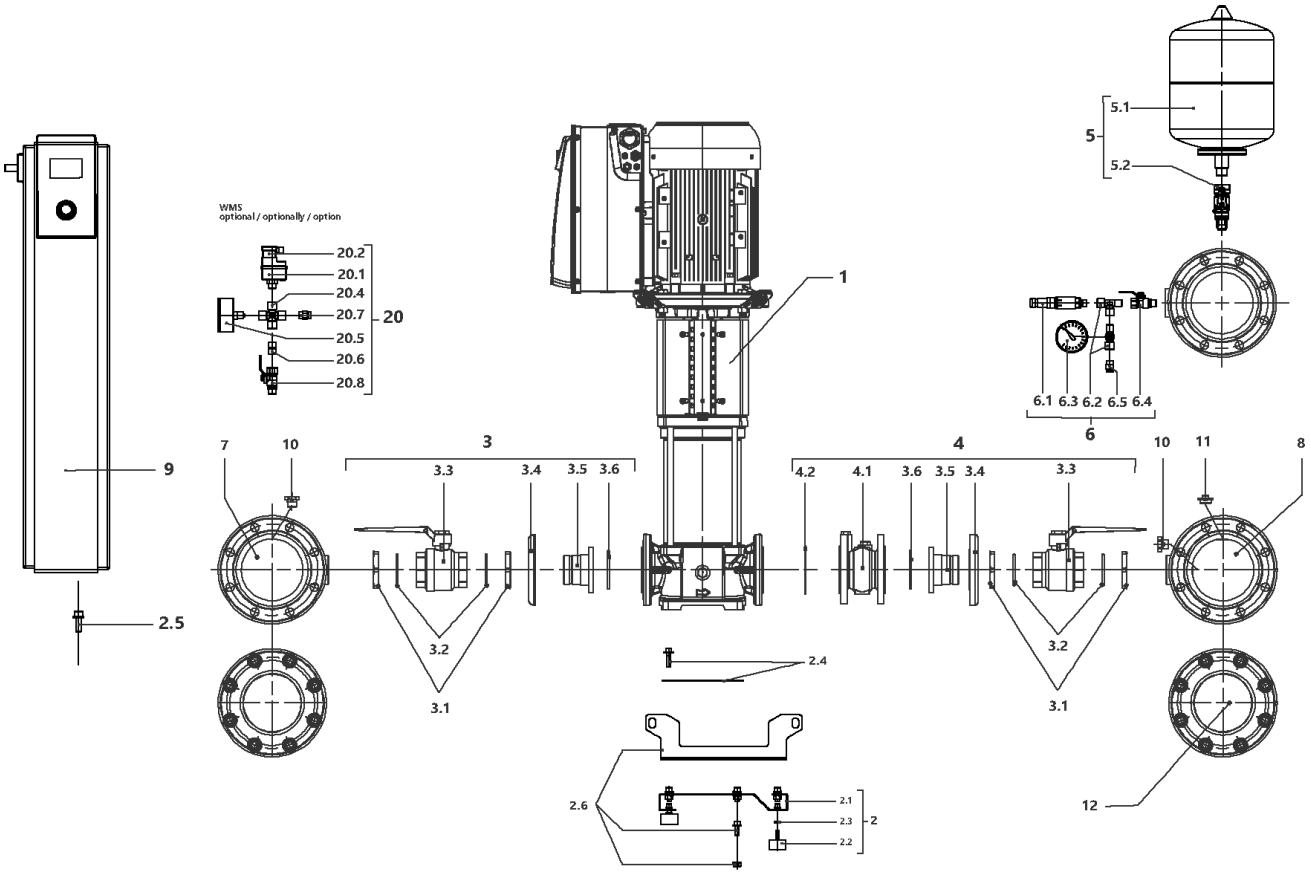
WMS
optional / optionally / option
20.2
20.1
20.4
20.7
20.5
20.6
20.8
20
1
5.1
5
5.2
6.1 6.3 6.2 6.5 6.4
6
9
7
10
3
3.3
3.4
3.5 3.6
4.2
4.1
3.6 3.5 3.4
4
10
11
8
2.5
3.2
3.1
2.4
2.6
2.1
2.3
2.2
2
12

## SiBoost Smart 2HELIX VE2205 (2540904)

| Item | Article no. | Description | Quantity |
|---|---|---|---|
| 1 | | HELIX VE2205-4/16/E/KS/2G | 1 |
| 2 | 4203998 | BASE PLATE DE2 1250x420 M10 | 1 |
| 2.1 | | > BASE_FR_2x22-52V500L400BOX150-250 | 1 |
| 2.2 | 2027881 | > VIBRATION DAMPER M.10X20 D.70 | 1 |
| 2.3 | 2028281 | > NUT M10 DIN936 (ISO4035) 17H VZ | 1 |
| 2.4 | 4203978 | > HOLDER PUMP Siboost Helix 22 KIT | 1 |
| 2.5 | 4197084 | > HOLDER SWITCHBOX WILO Smart Control KIT | 1 |
| 2.6 | 4203979 | > LIFTING Siboost HELIX 22/36 KIT | 1 |
| 3 | 4203980 | SUCTION SIDE Siboost Helix 22 KIT | 1 |
| 3.1 | 2028689 | > NUT G2"X14 RG | 1 |
| 3.2 | 2028690 | > O-RING ID.53,35X5,33 EP851 | 1 |
| 3.2 | 2663977 | > BALL VALVE TYP250W IG.2" PN35 GIACOMINI | 1 |
| 3.4 | 2028285 | > LAPPED FLANGE DN50 1.4301 DIN2642P | 1 |
| 3.5 | 4203981 | > UNION INSERT DN50-G2" FLANGE AISI304 VP. | 1 |
| 3.6 | 2029911 | > O-RING ID.69,2X5,33 EPDM 70 SHR | 1 |
| 4 | 4203982 | DELIVERY SIDE Siboost Helix 22 KIT | 1 |
| 3.1 | 2028689 | > NUT G2"X14 RG | 1 |
| 3.2 | 2028690 | > O-RING ID.53,35X5,33 EP851 | 1 |
| 3.3 | 2663977 | > BALL VALVE TYP250W IG.2" PN35 GIACOMINI | 1 |
| 3.4 | 2028285 | > LAPPED FLANGE DN50 1.4301 DIN2642P | 1 |
| 3.5 | 4203981 | > UNION INSERT DN50-G2" FLANGE AISI304 VP. | 1 |
| 3.6 | 2029911 | > O-RING ID.69,2X5,33 EPDM 70 SHR | 1 |
| 4.1 | 2118590 | > NON RETURN VALVE DN50 PN16 VP. | 1 |
| 4.2 | 4202854 | > Flat gasket D61x107x2_DN50_PN25_FIBER VP | 1 |
| 5 | 4203983 | DIAPHREM TANK 8L/PN16 DIN4807/T5 KIT | 1 |
| 5.1 | 2045914 | > DIAPHREM TANK 8L TYP-DD 16BAR | 1 |
| 5.2 | 4189350 | > FLOW FITTING G3/4 FOR DIAPHRAG VESSEL VP | 1 |
| 6 | 4197076 | PRESSURE SENSOR/ GAUGE 0-16BAR KIT | 1 |
| 6.1 | 2085909 | > PRESS.SENSOR 1/4" 0-16BAR 4-20MA VP. | 1 |
| 6.2 | 4197077 | > T-PIECE 1/4" VP. | 1 |
| 6.3 | 2028692 | > PRESSURE GAUGE NG63-PN16-G1/4 | 1 |
| 6.4 | 2028291 | > BALL TAP R1/4" PN42 GIACOMINI R254DL | 1 |
| 6.5 | 2028691 | > BLOWGUN 1/4" MS 30BAR VP. | 1 |
| 7 | 4203999 | PIPE DE2 3"-2x2"+1x1/4x1000 VP. | 1 |

| Item | Article no. | Description | Quantity |
|---|---|---|---|
| 8 | 4204000 | PIPE DE2 3"-2x2"+1x1/4+1x3/4x1000 VP. | 1 |
| 9 | | W-CTRL-SCE-B-2x24A-T34-FM-ND2-AVC-PKG | 1 |
| 10 | 4197079 | PLUG G1/4"x10 AISI304 KIT | 1 |
| 11 | 2032654 | PLUG R3/4" MS VIEGA 1751 | 1 |
| 20 | | ASSEMBLY WMS. DE-EB. +VP | 1 |
| 20.1 | 2028652 | > PRESSURE SWITCH PS3-ASR 1/(1,3) VP. | 1 |
| 20.2 | 2130983 | > PLUG PS3-415 WITH KABEL 1,5M 2NO VP. | 1 |
| 20.4 | 2028290 | > CROSSPIECE R1/4" MS-NICKEL | 1 |
| 20.5 | 2028687 | > PRESSURE GAUGE NG63 R1/4" HI.0-6BAR | 1 |
| 20.6 | 2054268 | > DUAL NIPPLE G1/4" x G1/4" MS VP. | 1 |
| 20.7 | 2028691 | > BLOWGUN 1/4" MS 30BAR VP. | 1 |
| 20.8 | 2028291 | > BALL TAP R1/4" PN42 GIACOMINI R254DL | 1 |

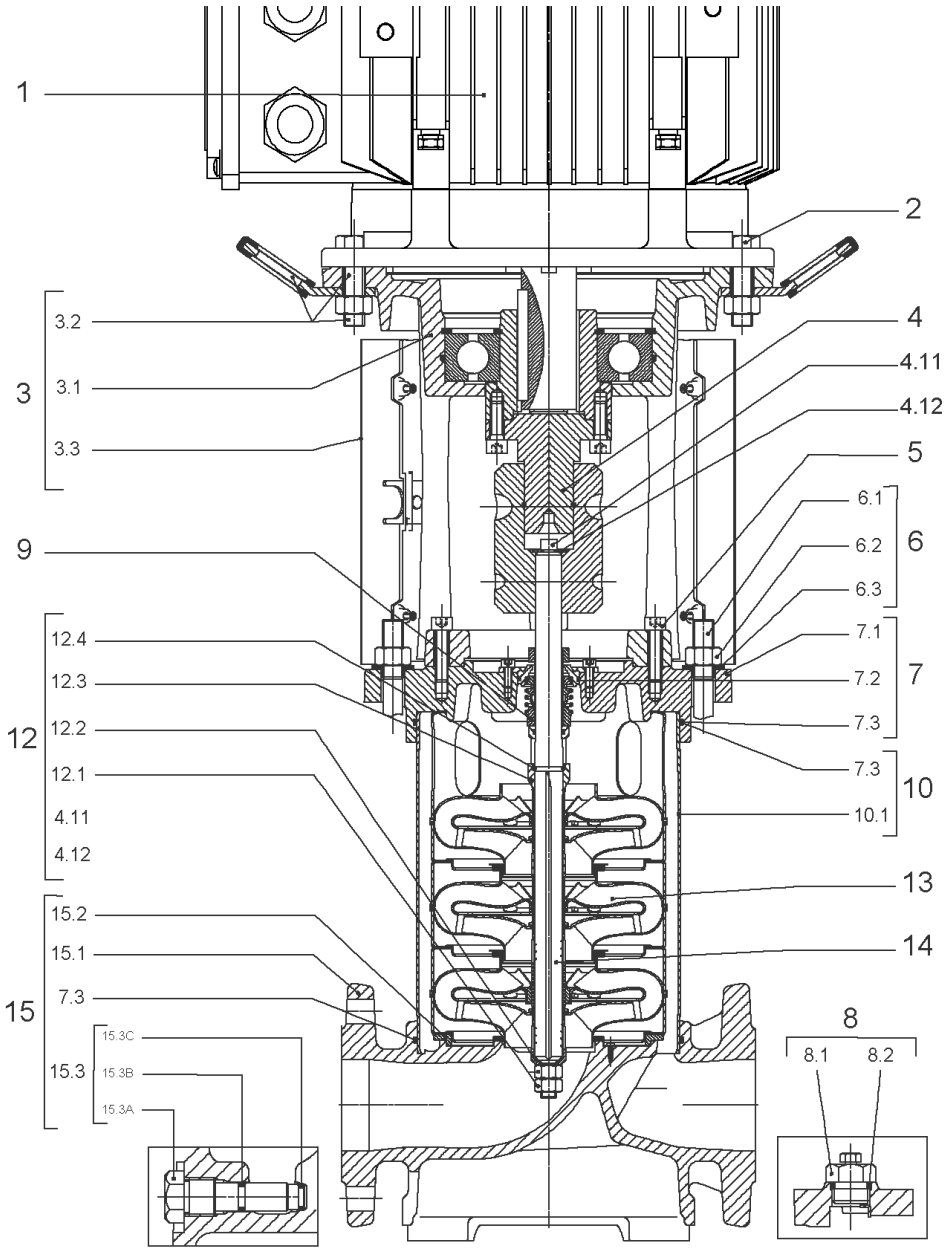
1
2
3
3.2
3.1
3.3
4
4.11
4.12
5
6
6.1
6.2
6.3
9
12
12.4
12.3
12.2
12.1
4.11
4.12
7
7.1
7.2
7.3
7.3
10
10.1
13
14
15
15.2
15.1
7.3
15.3
15.3C
15.3B
15.3A
8
8.1
8.2

## HELIX VE2205-4/16/E/KS/2G

| Item | Article no. | Description | Quantity |
|---|---|---|---|
| 1 | | DRIVE HELIX VE2205-IE2-ARC KIT | 1 |
| Note: no longer available/nicht mehrlieferbar/n'est plus disponible | | | |
| 1 | 4218536 | DRIVE HELIX VE2205-IE4-WEG KIT | 1 |
| Note: MOTOR BRAND WEG | | | |
| 2 | 4179586 | SCREW M16X60 (4 PIECES) | 1 |
| 3 | 4157721 | LANTERN HELIX 22/36 FF300 BB6312 KIT | 1 |
| 3.1 | | > LANTERN FF300 M+ GJL MACHINED+CATA 6312 | 1 |
| 3.2 | 4179589 | > EYELET CPL.FF300 HELIX(4 PIECES) | 1 |
| 3.3 | 4143969 | > COUPLING PROTECT HELIX FF KIT | 1 |
| 4 | 4143966 | COUPLING D.20XD.38 FF300 KIT | 1 |
| 5 | 4157725 | SCREW M10X40 (4 PIECES) | 1 |
| 6 | 4181164 | STUD BOLT M16X382 KIT | 1 |
| 6.1 | | > TIE BOLT M16-382x24x44-1.4057 | 1 |
| 6.2 | 4179562 | > NUT M16 8.8 ISO4032 (4 PIECES) | 1 |
| 6.3 | 4097852 | > WASHER-CS-16.4-32-2.8-NFE25-511-A2 | 1 |
| 7 | 4179565 | END SHIELD HELIX 8'' EPDM KIT | 1 |
| 7.1 | | > END SHIELD M+ GJL MACHINED+CATA | 1 |
| 7.2 | 4179564 | > O-RING D.42.52x2.62 EPDM VP. | 1 |
| 7.3 | 4179571 | > O-RING HOUSING PIPE HELIX22/36/52 VP. | 1 |
| 8 | 4186377 | FILING/PURGING PLUG 304 HELIX KIT | 1 |
| 8.1 | | > FILLING/VENTING-PLUG-MVI8/10"-304 | 1 |
| 8.2 | 4032291 | > O-RING 17x3 EPDM KTW/WRC | 1 |
| 9 | 4143973 | CARTRIDGE HELIX22-36-52 O/E KIT | 1 |
| 10 | 4181165 | HOUSING PIPE D.204X314 1.4301 KIT | 1 |
| 7.3 | 4179571 | > O-RING HOUSING PIPE HELIX22/36/52 VP. | 1 |
| 10.1 | | > HOUSING-PIPE Ø204-M+2205-304 | 1 |
| 11 | 4179143 | CENTERING STAGE-RETURN HELIX22 1.4307 VP | 1 |
| 12 | 4143967 | SHAFT EQUIPMENT HELIX V KIT | 1 |
| 13 | | HYDRAULIC HELIX V 2205 | 1 |
| 14 | 2114267 | SHAFT D.22X454 1.4057 VP. | 1 |
| 15 | 4186357 | EQUIPED HOUSING HELIX OPTI DN50 GJL KIT | 1 |
| 15.1 | | > PUMP CASING MONO.GJL M+8" DN50 DWA | 1 |
| 15.3 | 4106048 | > DRAIN/PRIMING PLUG EPDM HELIX FIRST KIT | 1 |
| 15.3A | | >> DRAIN AND PRIMING PLUG-VMI10"-304 | 1 |

| Item | Article no. | Description | Quantity |
|---|---|---|---|
| 15.3B | 4032293 | >> O-RING-10x3-EPDM-KTW/WRC | 1 |
| 15.3C | 4233957 | >> O-RING ID.9 EPDM VP. | 1 |
| 7.3 | 4179571 | > O-RING HOUSING PIPE HELIX22/36/52 VP. | 1 |

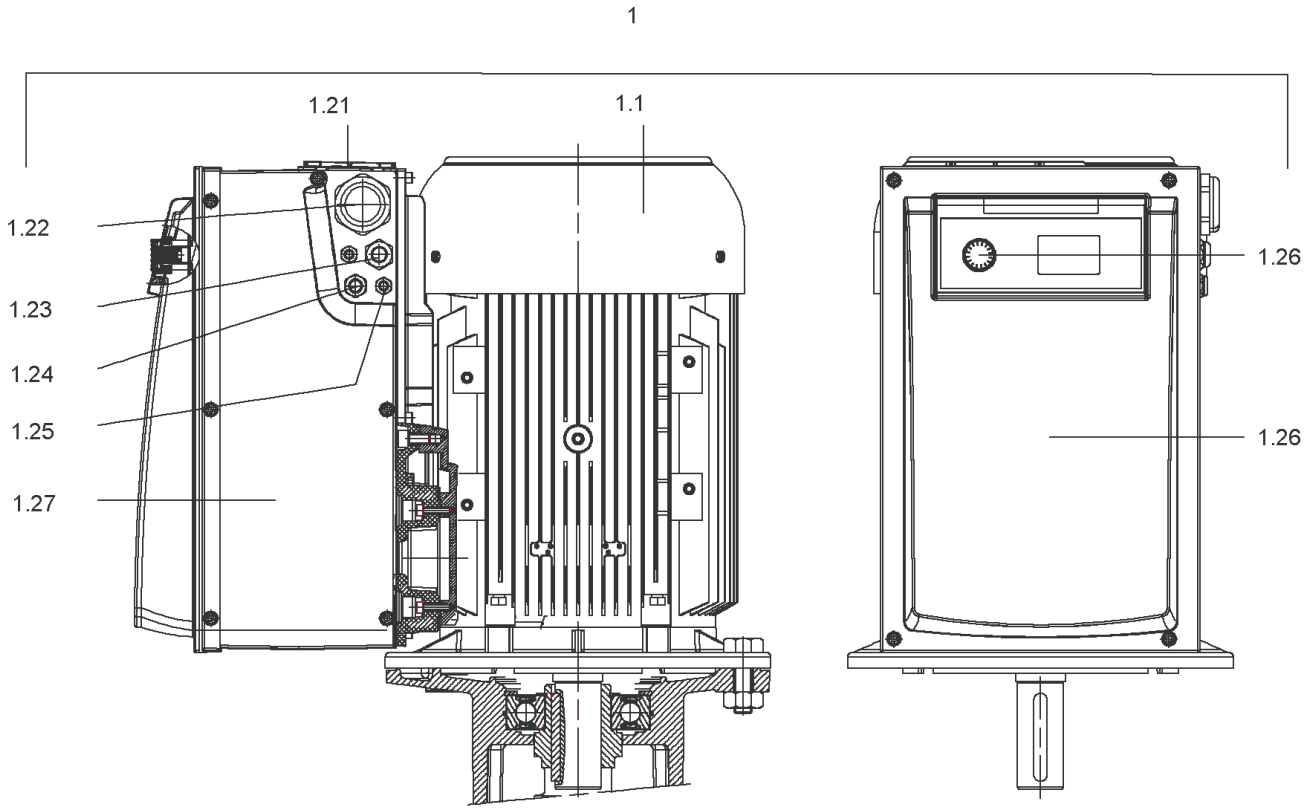
1
1.21
1.1
1.22
1.23
1.24
1.25
1.27
1.26
1.26

## DRIVE HELIX VE2205-IE2-ARC KIT

| Item | Article no. | Description | Quantity |
|---|---|---|---|
| 1.1 | | M11-2T638P55V1-160F300-N42-IE2 | 1 |
| | | SPARE PARTS MOTOR:ON REQUEST | 1 |
| 1.21 | 2132102 | FAN SMALL TL6/7 FF KIT | 1 |
| 1.25 | 2132097 | CABLE CONNECTION M12 TL6/7 FF VP. | 1 |
| 1.24 | 2132098 | CABLE CONNECTION M16 TL6/7 FF VP. | 1 |
| 1.23 | 2132099 | CABLE CONNECTION M20 TL6/7 FF VP. | 1 |
| 1.22 | 2132100 | CABLE CONNECTION SMALL M40 TL6/7 FF VP. | 1 |
| 1.27 | 2132104 | COVER SIDE TL6/7 FF CPL.VP. | 1 |
| 1.26 | 2132452 | MODULE COVER/BUTTON TL6/7 FF VP. | 1 |

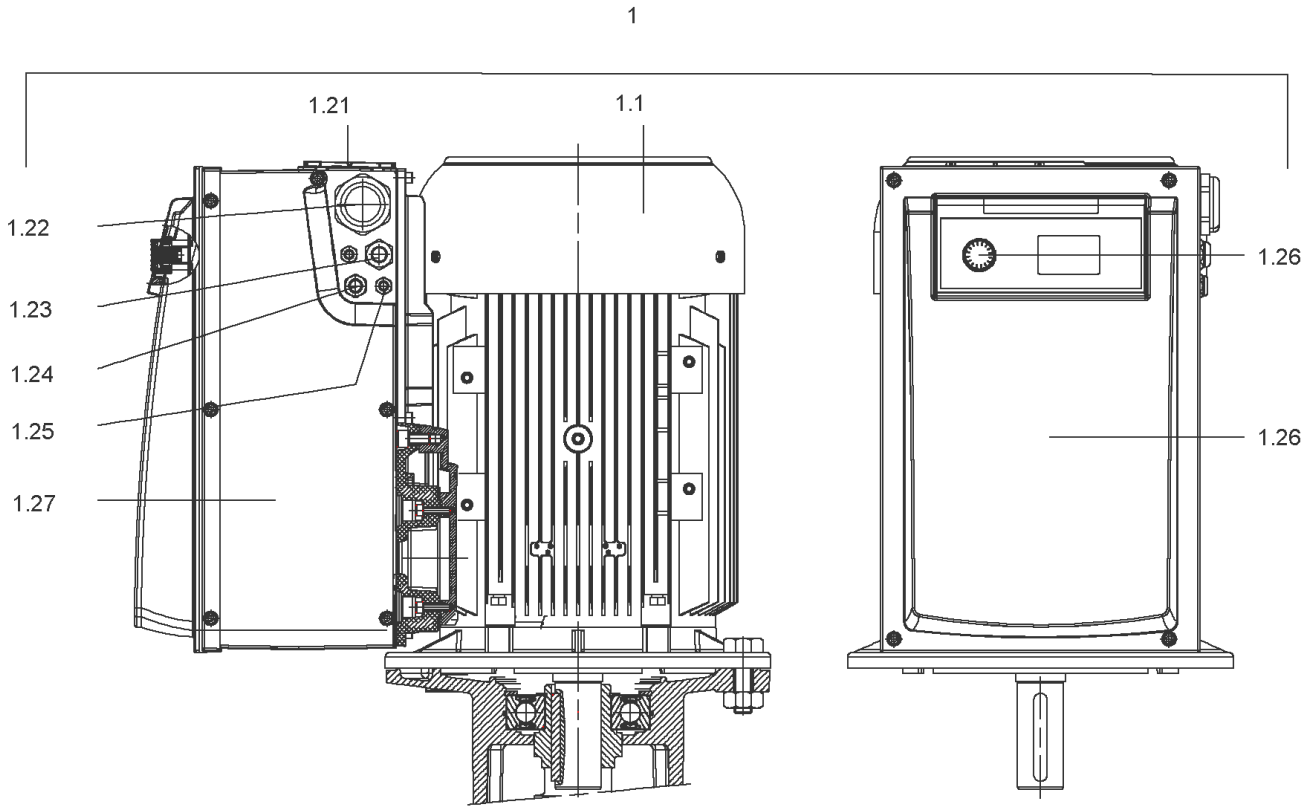
1
1.21
1.1
1.22
1.23
1.24
1.25
1.27
1.26
1.26

## DRIVE HELIX VE2205-IE4-WEG KIT (4218536)

| Item | Article no. | Description | Quantity |
|---|---|---|---|
| 1.1 | | M11-2T638P55V1-160F30-N42-ADAPT-IE4-WEG | 1 |
| | | SPARE PARTS MOTOR:ON REQUEST | 1 |
| 1.21 | 2132102 | FAN SMALL TL6/7 FF KIT | 1 |
| 1.25 | 2132097 | CABLE CONNECTION M12 TL6/7 FF VP. | 1 |
| 1.24 | 2132098 | CABLE CONNECTION M16 TL6/7 FF VP. | 1 |
| 1.23 | 2132099 | CABLE CONNECTION M20 TL6/7 FF VP. | 1 |
| 1.22 | 2132100 | CABLE CONNECTION SMALL M40 TL6/7 FF VP. | 1 |
| 1.27 | 2132104 | COVER SIDE TL6/7 FF CPL.VP. | 1 |
| 1.26 | 2132452 | MODULE COVER/BUTTON TL6/7 FF VP. | 1 |

## COUPLING D.20XD.38 FF300 KIT (4143966)

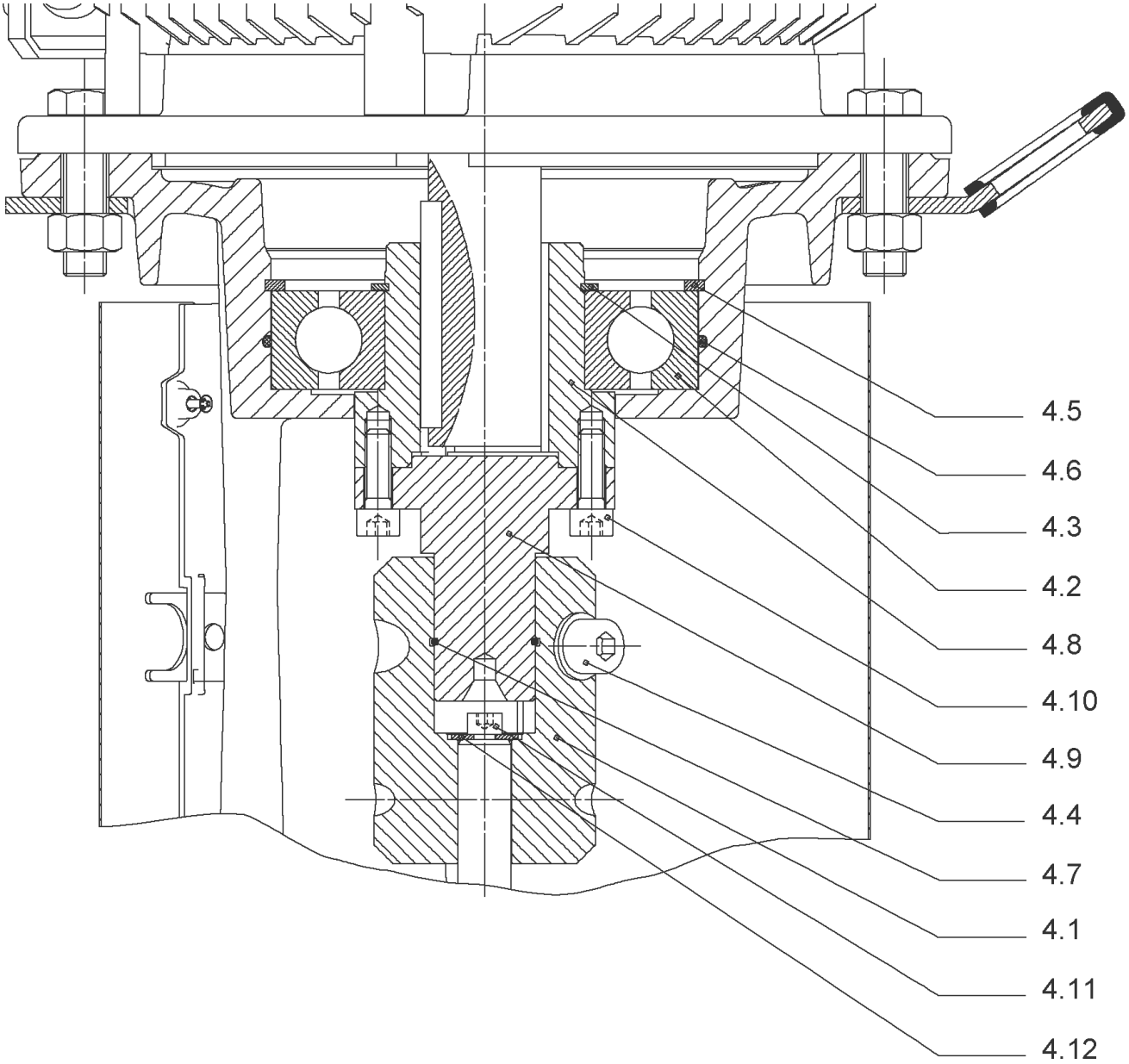

## COUPLING D.20XD.38 FF300 KIT (4143966)

| Item | Article no. | Description | Quantity |
|---|---|---|---|
| 4.1 | 4179590 | COUPLING 2 PARTS D.20XD.38XL115 VP. | 1 |
| 4.2 | 2123699 | BALL BEARING 6312/2Z-C4 (HT) VP. | 1 |
| 4.3 | 63428 | CIRCLIP-FOR-SHAFT-D60x2 | 1 |
| 4.4 | 2130991 | SCREW M12X30 ISO4762 8.8 ZN(4 PIECES) | 1 |
| 4.5 | 4032277 | CIRCLIP-HOLE-130x4 | 1 |
| 4.6 | 4006725 | O-RING ID.132,94x3,53 NBR70SR | 1 |
| 4.7 | 2130992 | RETAINING RING D.35xD.2,5 DIN7993 VP. | 1 |
| 4.8 | 4179591 | HUB D.42xD.60 VP. | 1 |
| 4.9 | 2130994 | SPACER D.38XD.55 VP. | 1 |
| 4.10 | 4094462 | SCREWS M10 ( 4 PIECES ) | 1 |
| 4.11 | 4233959 | SCREW M8x16 VP. | 1 |
| 4.12 | | SERRATED LOCK WASHER Ø8.2XØ25X35X2 | 1 |

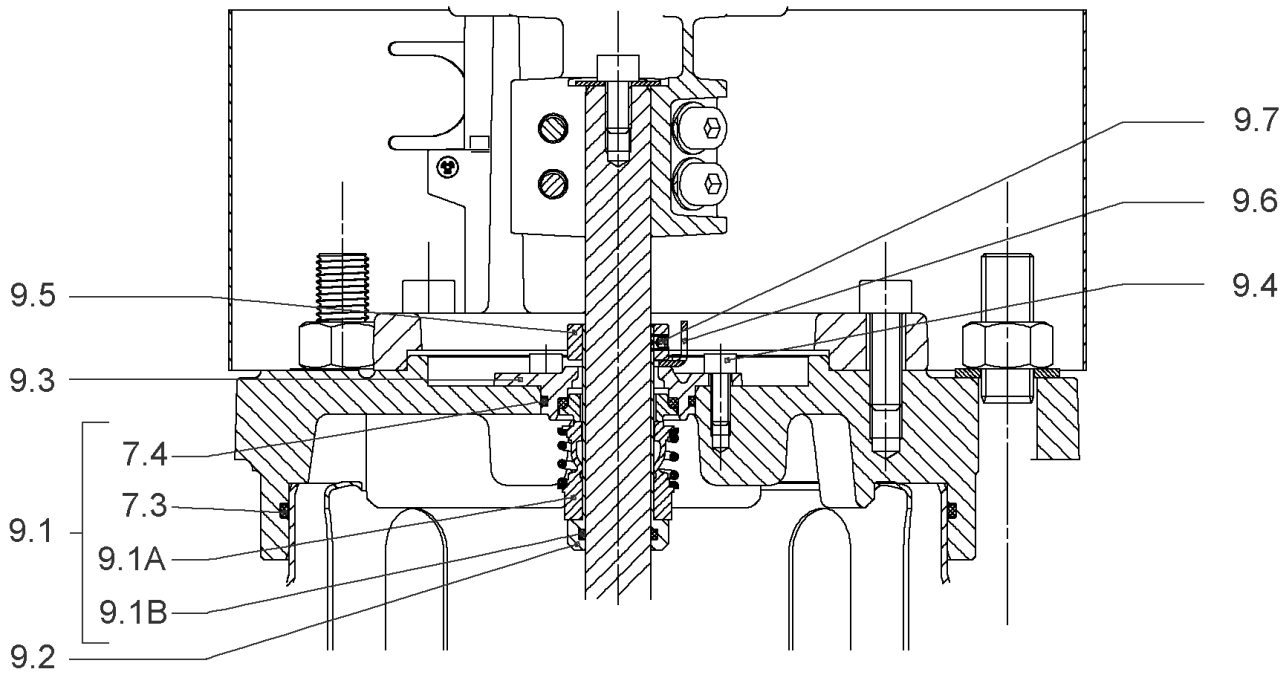
9.7
9.6
9.4
9.5
9.3
7.4
7.3
9.1
9.1A
9.1B
9.2

## CARTRIDGE HELIX22-36-52 O/E KIT (4143973)

| Item | Article no. | Description | Quantity |
|---|---|---|---|
| 9.1 | 4143974 | SEAL-KIT-HELIX22-36-52 O/E | 1 |
| 7.3 | 4179571 | > O-RING HOUSING PIPE HELIX22/36/52 VP. | 1 |
| 7.4 | 4179572 | > O-RING ID.42.52X2.62 EPDM VP. | 1 |
| 9.1A | 4179573 | > M.SEAL.HELIX22-36-52 O/E VP. | 1 |
| 9.1B | 4179574 | > O-RING ID.20x2.65 EPDM VP. | 1 |
| 9.2 | 4179566 | SHAFT SLEEVE D.20/20X60 1.4404 VP. | 1 |
| 9.3 | 4179567 | RING HOLDER Ø22 1.4301 VP. | 1 |
| 9.4 | 4176520 | SCREW CH M5x5 A4-70 ( 3PIECES ) | 1 |
| 9.5 | 4179568 | DRIVE RING D.31/22.1x11 MACH.VP. | 1 |
| 9.6 | 4179569 | TOOL M.S.CART.HELIX 8'' VP. | 1 |
| 9.7 | 4179570 | SCREW M6X16 ISO4762 8.8 GEOMET(4 PIECES) | 1 |

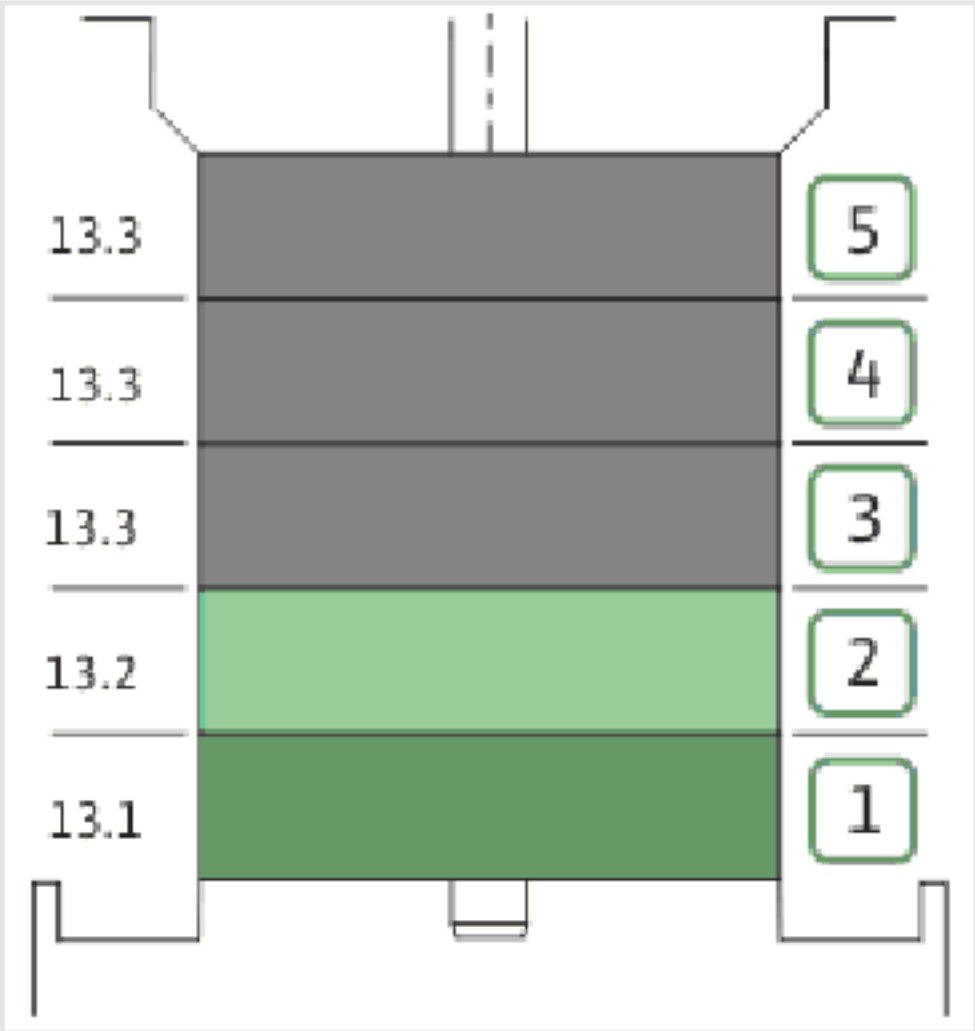
13.3
13.3
13.3
13.2
13.1
5
4
3
2
1

| Item | Article no. | Description | Quantity |
|---|---|---|---|
| 13.1 | 4157739 | FIRST STAGE HELIX 22 1.4307 KIT | 1 |
| | | > IMPELLER-H1-M+22-304 | 1 |
| | | > MACH.STG-CASING-WOGV-WNR-M+22-304 | 1 |
| 13.2 | 4157740 | BEARING STAGE HELIX 22 1.4307 KIT | 1 |
| | | > IMPELLER-H2-M+22-304 | 1 |
| | | > MACH.BEARING-STG-CASING-WNR-M+22-304 | 1 |
| | | > SHAFT-SLEEVE-D26xD22x16-CW | 1 |
| 13.3 | 4157743 | INTERMEDIATE STAGE HELIX 22 KIT | 1 |
| | | > MACH.STD-STG-CASING-WGV+NR-M+22-304 | 1 |
| | | > IMPELLER-H2-M+22-304 | 1 |

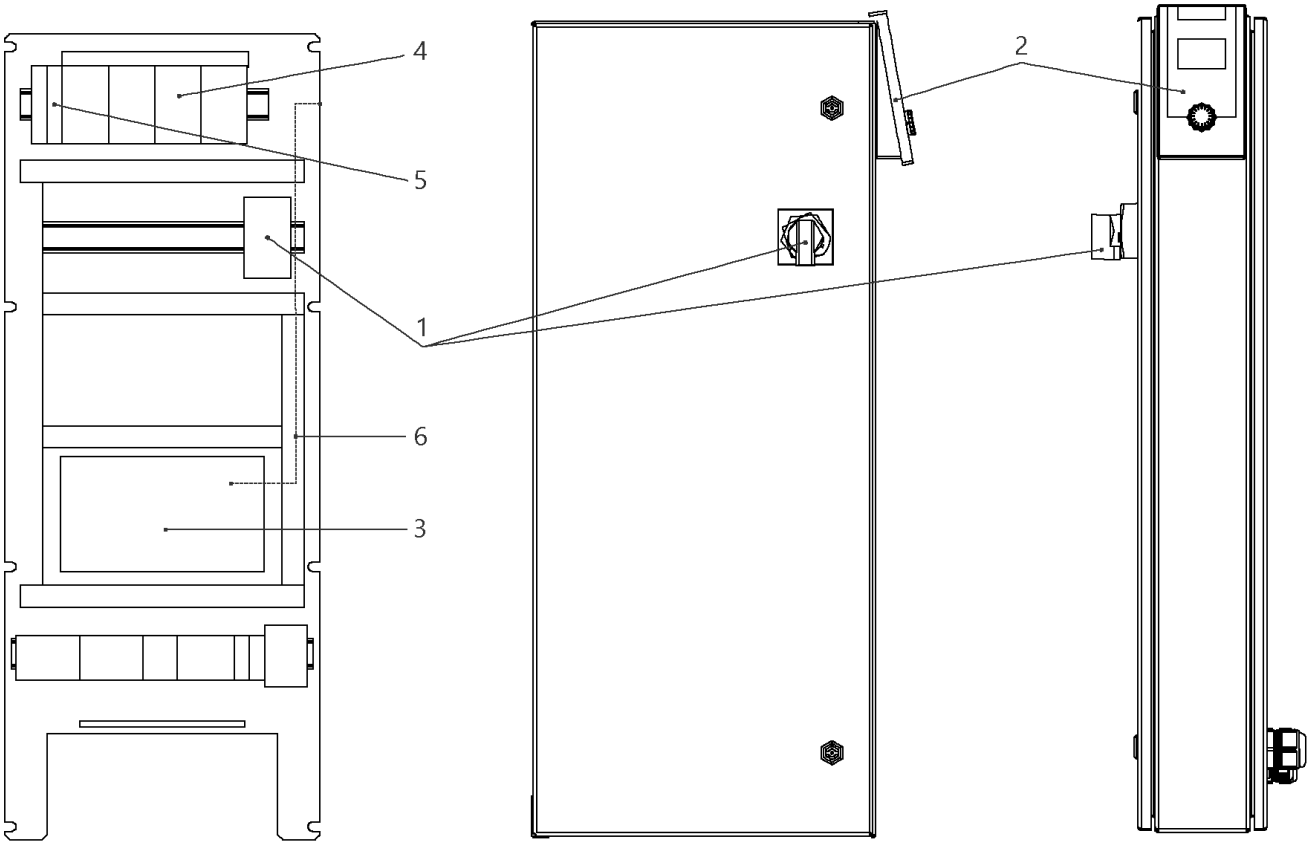
4
5
1
6
3
2

## W-CTRL-SCE-B-2x24A-T34-FM-ND2-AVC-PKG

| Item | Article no. | Description | Quantity |
|---|---|---|---|
| 1 | 2104473 | MAIN SWITCH OT63F3 L105 KIT | 1 |
| 2 | 4184784 | CONTROL PANEL HMI SC KIT | 1 |
| 2 | 4185259 | ASSEMBLY DISPLAY SC PKG VP. | 1 |
| Note: DISPLAY ALONE / PLATINE SEULE | | | |
| 3 | 4185257 | ASSEMBLY CPU SCe Booster VP. | 1 |
| 4 | 2051219 | AUTOM.CIRCUIT BREAKER S203 B32 FOR 15kW | 1 |
| 5 | 2046288 | CIRCUIT BREAKER S201 B16 | 1 |
| 6 | 4194956 | PATCH CABLE RJ45 CAT6 1,0M BLUE SC-PANEL | 1 |

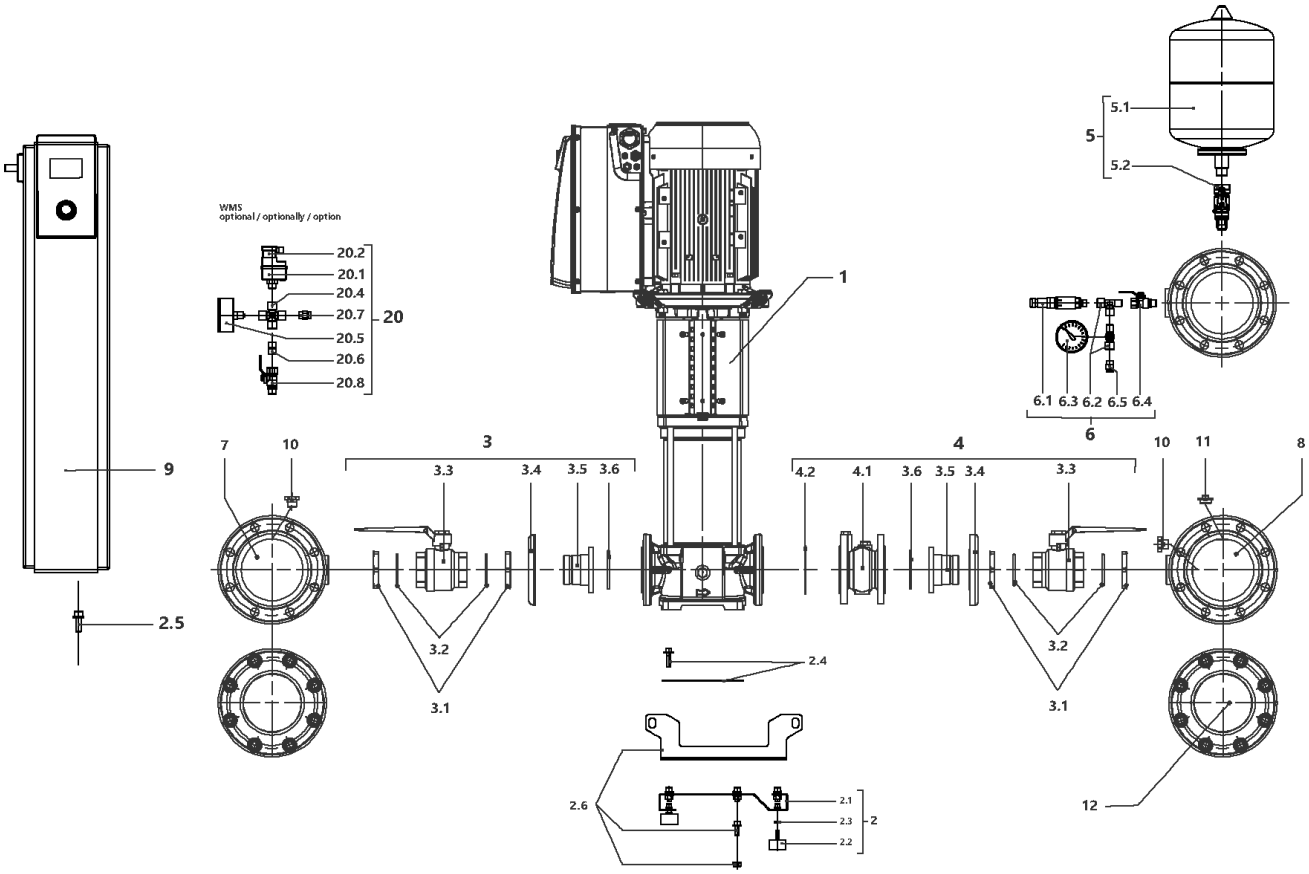
WMS
optional / optionally / option
20.2
20.1
20.4
20.7
20.5
20.6
20.8
20
1
5
5.1
5.2
6.1 6.3 6.2 6.5 6.4
6
9
2.5
7
10
3
3.3
3.4
3.5 3.6
3.2
3.1
4
4.2
4.1
3.6 3.5 3.4
3.3
3.2
3.1
10
11
8
12
2.4
2.6
2.1
2.3
2.2
2

## SiBoost Smart 2HELIX VE3602/5,5kW (2540913)

| Item | Article no. | Description | Quantity |
|---|---|---|---|
| 1 | | HELIX VE3602-5,5-4/16/E/S-FF240 | 1 |
| 2 | 4204890 | BASE PLATE DE2 850x420 M10 KIT | 1 |
| 2.1 | | > BASEPLATE_2x4/6/10/16V_E300_BOX_150 | 1 |
| 2.2 | 2027881 | > VIBRATION DAMPER M.10X20 D.70 | 1 |
| 2.3 | 2028281 | > NUT M10 DIN936 (ISO4035) 17H VZ | 1 |
| 2.4 | 4204891 | > HOLDER PUMP Siboost Smart V36/52 KIT | 1 |
| 2.5 | 4197084 | > HOLDER SWITCHBOX WILO Smart Control KIT | 1 |
| 2.6 | 4203979 | > LIFTING Siboost HELIX 22/36 KIT | 1 |
| 3 | 4204892 | SUCTION SIDE Siboost Helix 36 KIT | 1 |
| 3.1 | 2027123 | > NUT G2½ X15 MS | 1 |
| 3.2 | 2025969 | > O-RING ID.72,39x5,33 EPDM 70SHORE | 1 |
| 3.2 | | > VALVE-BS-2"1/2-F/F-PS25-BRASS-NICK-ACS | 1 |
| 3.4 | 2032973 | > LAPPED FLANGE DN65 1.4301 DIN2642P | 1 |
| 3.5 | | > UNION INSERT DN65-G21/2" FLANGE AISI304 | 1 |
| 3.6 | 2028296 | > O-RING ID.91,44x5,33 EPDM 70SHORE | 1 |
| 4 | 4204894 | DELIVERY SIDE Siboost Helix 36 KIT | 1 |
| 3.1 | 2027123 | > NUT G2½ X15 MS | 1 |
| 3.2 | 2025969 | > O-RING ID.72,39x5,33 EPDM 70SHORE | 1 |
| 3.3 | | > VALVE-BS-2"1/2-F/F-PS25-BRASS-NICK-ACS | 1 |
| Note: accessories see price list/Zubehör siehe | | | |
| 3.4 | 2032973 | > LAPPED FLANGE DN65 1.4301 DIN2642P | 1 |
| 3.5 | | > UNION INSERT DN65-G21/2" FLANGE AISI304 | 1 |
| Note: accessories see price list/Zubehör siehe | | | |
| 3.6 | 2028296 | > O-RING ID.91,44x5,33 EPDM 70SHORE | 1 |
| 4.1 | 2127586 | > NON RETURN VALVE DN65 PN16 TYP402B VP. | 1 |
| 4.2 | 2119912 | > GASKET D.77/127X2 DN65 C4430 VP. | 1 |
| 5 | 4203983 | DIAPHREM TANK 8L/PN16 DIN4807/T5 KIT | 1 |
| 5.1 | 2045914 | > DIAPHREM TANK 8L TYP-DD 16BAR | 1 |
| 5.2 | 4189350 | > FLOW FITTING G3/4 FOR DIAPHRAG VESSEL VP | 1 |
| 6 | 4197076 | PRESSURE SENSOR/ GAUGE 0-16BAR KIT | 1 |
| 6.1 | 2085909 | > PRESS.SENSOR 1/4" 0-16BAR 4-20MA VP. | 1 |
| 6.2 | 4197077 | > T-PIECE 1/4" VP. | 1 |
| 6.3 | 2028692 | > PRESSURE GAUGE NG63-PN16-G1/4 | 1 |
| 6.4 | 2028291 | > BALL TAP R1/4" PN42 GIACOMINI R254DL | 1 |

| Item | Article no. | Description | Quantity |
|---|---|---|---|
| 6.5 | 2028691 | > BLOWGUN 1/4" MS 30BAR VP. | 1 |
| 7 | 4204895 | PIPE DE2 DN100-2x21/2"+2x1/4x800 VP. | 1 |
| 8 | 4204896 | PIPE DE2 DN100-2x21/2"+1x1/4+1x3/4x800 | 1 |
| 9 | | W-CTRL-SCE-B-2x13A-T34-FM-ND2-AVC-PKG | 1 |
| 10 | 4197079 | PLUG G1/4"x10 AISI304 KIT | 1 |
| 11 | 2032654 | PLUG R3/4" MS VIEGA 1751 | 1 |
| 12 | 4203989 | BLIND-FLANGE DN100 PN16 -1.4301 KIT | 1 |
| | 2094573 | > NUT M16 DIN934 A2 1.4301 VP. | 1 |
| | 2107590 | > SCREW M16x70 DIN933 A2 (8 PIECES) | 1 |
| | 2094572 | > WASHER A17 DIN125 A2 1.4301 VP. | 1 |
| | | > FULL FLANGE ST.DN100 PN16 EN1092-1/05 A2 | 1 |
| | | > FLANGE COVER DN100 DIN 3443 FORM A | 1 |
| | 2106342 | > FLAT GASKET D.120/162X2 DN100 C4430 VP. | 1 |
| 20 | | ASSEMBLY WMS. DE-EB. +VP | 1 |
| 20.1 | 2028652 | > PRESSURE SWITCH PS3-ASR 1/(1,3) VP. | 1 |
| 20.2 | 2130983 | > PLUG PS3-415 WITH KABEL 1,5M 2NO VP. | 1 |
| 20.4 | 2028290 | > CROSSPIECE R1/4" MS-NICKEL | 1 |
| 20.5 | 2028687 | > PRESSURE GAUGE NG63 R1/4" HI.0-6BAR | 1 |
| 20.6 | 2054268 | > DUAL NIPPLE G1/4" x G1/4" MS VP. | 1 |
| 20.7 | 2028691 | > BLOWGUN 1/4" MS 30BAR VP. | 1 |
| 20.8 | 2028291 | > BALL TAP R1/4" PN42 GIACOMINI R254DL | 1 |

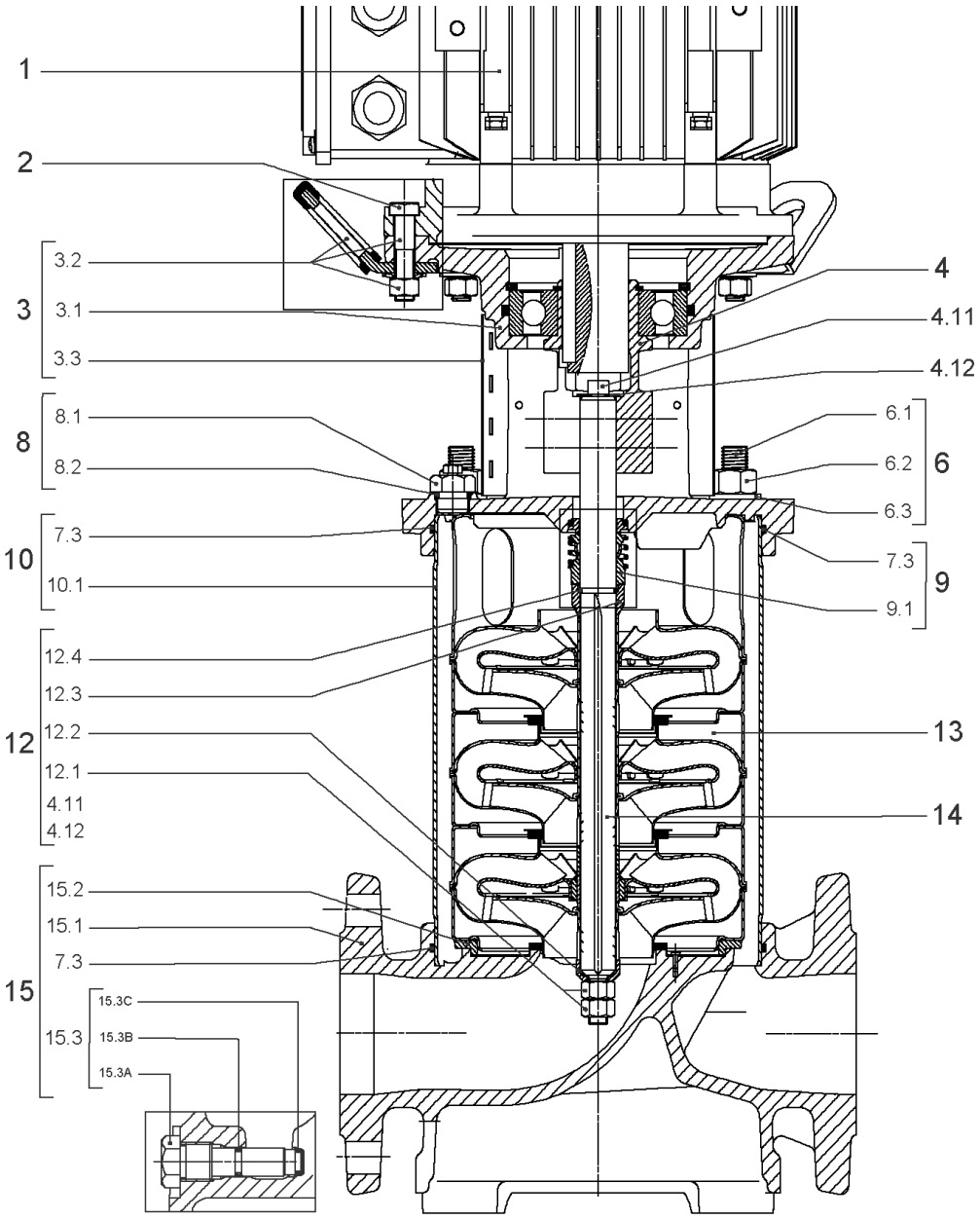
1
2
3
3.2
3.1
3.3
8
8.1
8.2
10
7.3
10.1
12
12.4
12.3
12.2
12.1
4.11
4.12
15
15.2
15.1
7.3
15.3
15.3C
15.3B
15.3A
4
4.11
4.12
6
6.1
6.2
6.3
9
7.3
9.1
13
14

| Item | Article no. | Description | Quantity |
|---|---|---|---|
| 1 | | DRIVE HELIX-VE3602-FF240-IE2-ATB KIT | 1 |
| Note: MOTOR BRAND ATB | | | |
| 1 | | DRIVE HELIXVE3602-5Kw-FF240 IE4-WE KIT | 1 |
| Note: MOTOR BRAND WILO ELEC | | | |
| | | SPARE PARTS MOTOR:ON REQUEST | 1 |
| 2 | 4174093 | SCREW M12X50 (4 PIECES) | 1 |
| 3 | 4186358 | LANTERN HELIX OPTI 8" FF240 KIT | 1 |
| 3.1 | | > M+8_LANTERN_ONE-PIECE_FF240_CATA_DWA | 1 |
| 3.2 | 4186346 | > EYELET CPL.FF240 HELIX (4 PIECES) | 1 |
| 3.3 | 4184853 | > COUPLING PROTECTOR FT HELIX 8'' KIT | 1 |
| 4 | 4186347 | COUPLING D.22XD.38 FF240T130 HELIX KIT | 1 |
| 6 | 4181156 | STUD BOLT M16X233 KIT | 1 |
| 6.1 | | > TIE BOLT M16-233x24x44-1.4057 | 1 |
| 6.2 | 4179562 | > NUT M16 8.8 ISO4032 (4 PIECES) | 1 |
| 6.3 | 4097852 | > WASHER-CS-16.4-32-2.8-NFE25-511-A2 | 1 |
| 8 | 4186377 | FILING/PURGING PLUG 304 HELIX KIT | 1 |
| 8.1 | | > FILLING/VENTING-PLUG-MVI8/10"-304 | 1 |
| 8.2 | 4032291 | > O-RING 17x3 EPDM KTW/WRC | 1 |
| 9 | 4192148 | SEAL-KIT-HELIX22-36-52 FIRST O/E | 1 |
| 7.3 | 4179571 | > O-RING HOUSING PIPE HELIX22/36/52 VP. | 1 |
| 9.1 | 4179573 | > M.SEAL.HELIX22-36-52 O/E VP. | 1 |
| 10 | 4181070 | HOUSING PIPE D.204X197 1.4307 KIT | 1 |
| 7.3 | 4179571 | > O-RING HOUSING PIPE HELIX22/36/52 VP. | 1 |
| 10.1 | | > HOUSING-PIPE Ø204-M+3602-304 | 1 |
| 12 | 4186374 | SHAFT EQUIPMENT HELIX 36 FIRST KIT | 1 |
| 13 | | HYDRAULIC HELIX V 3602 | 1 |
| 14 | 4186343 | SHAFT D.22X301 1.4057 VP. | 1 |
| 15 | 4186381 | EQUIPED HOUSING HELIX OPTI DN65 GJL KIT | 1 |
| 15.1 | | > PUMP CASING MONO.M+8" DN65 PN16 DWA | 1 |
| 15.2 | | > HYD.SUP.M+8" MONO.HOUSING DN65 DWA | 1 |
| 15.3 | 4106048 | > DRAIN/PRIMING PLUG EPDM HELIX FIRST KIT | 1 |
| 15.3A | | >> DRAIN AND PRIMING PLUG-VMI10"-304 | 1 |
| 15.3B | 4032293 | >> O-RING-10x3-EPDM-KTW/WRC | 1 |
| 15.3C | 4233957 | >> O-RING ID.9 EPDM VP. | 1 |

| Item | Article no. | Description | Quantity |
|---|---|---|---|
| 7.3 | 4179571 | > O-RING HOUSING PIPE HELIX22/36/52 VP. | 1 |
| 13.1A | 4161200 | > NECK RING 1.STAGE HELIX V36/52 KIT | 1 |
| | | >> NECK-RING-M+36/52 | 1 |
| | | >> HYDRAULIC SUPPORT CAP M+36/52 304 | 1 |
| | | >> SCREW TCL M3X8 A4 POZIDRIV | 1 |

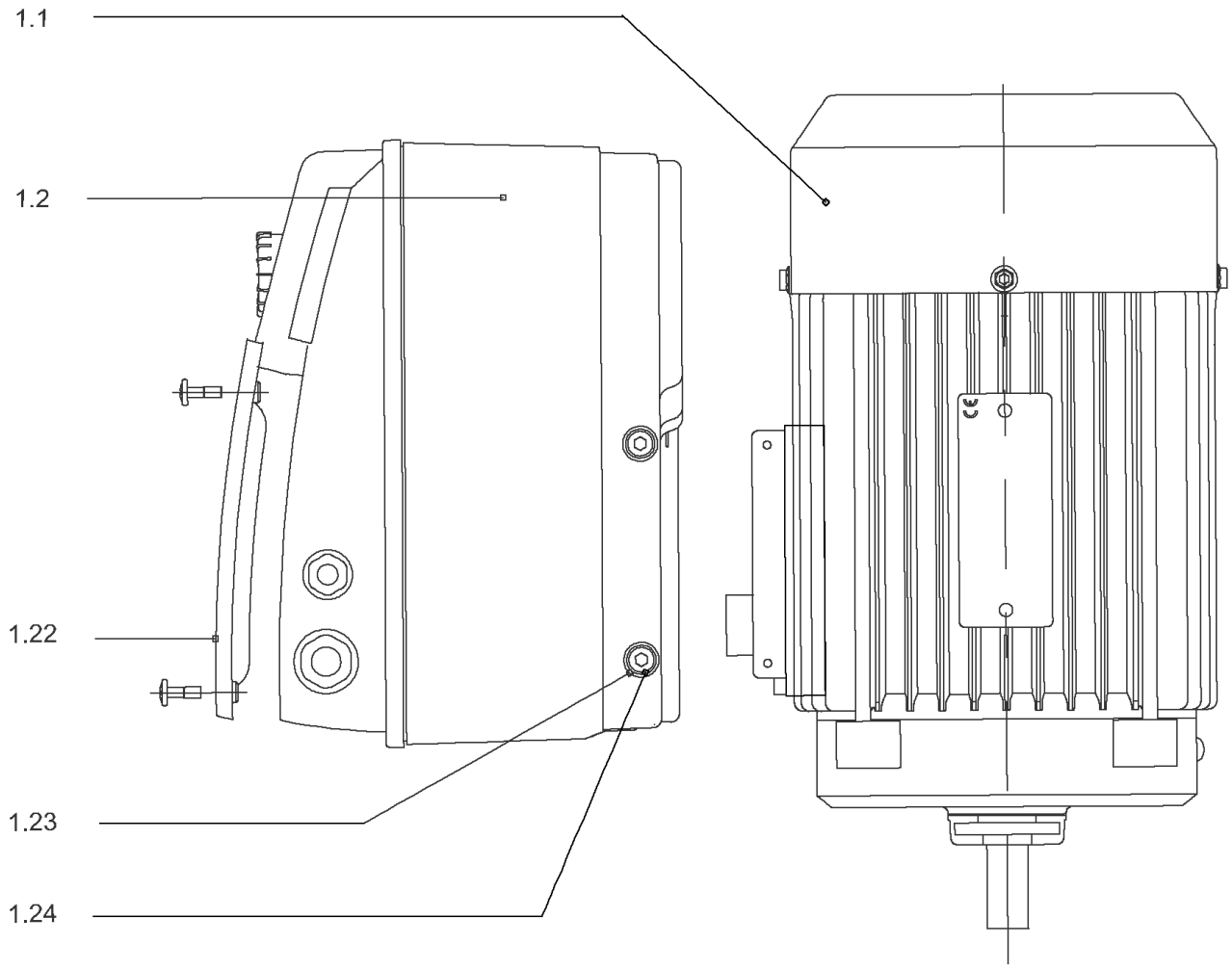
1.1
1.2
1.22
1.23
1.24

## DRIVE HELIX-VE3602-FF240-IE2-ATB KIT

| Item | Article no. | Description | Quantity |
|---|---|---|---|
| 1.1 | | MOTOR 5,5/2/132 FF240 T400V 50HZ IE2 VP | 1 |
| Note: no longer available/nicht mehrlieferbar/n'est plus disponible | | | |
| | | SPARE PARTS MOTOR:ON REQUEST | 1 |
| 1.2 | 4186773 | MODULE HELIX-VE3602-IE2-ATB KIT | 1 |
| 1.22 | 2111344 | > MODULE COVER/GASKET TL5 KIT | 1 |
| 1.23 | 4215716 | > SCREW M5X16 DIN912 8.8 A2A (4pieces) VP. | 1 |
| 1.24 | 2057978 | > RONDELLE A5,3 DIN6797 FST ZN (4 PIECES) | 1 |

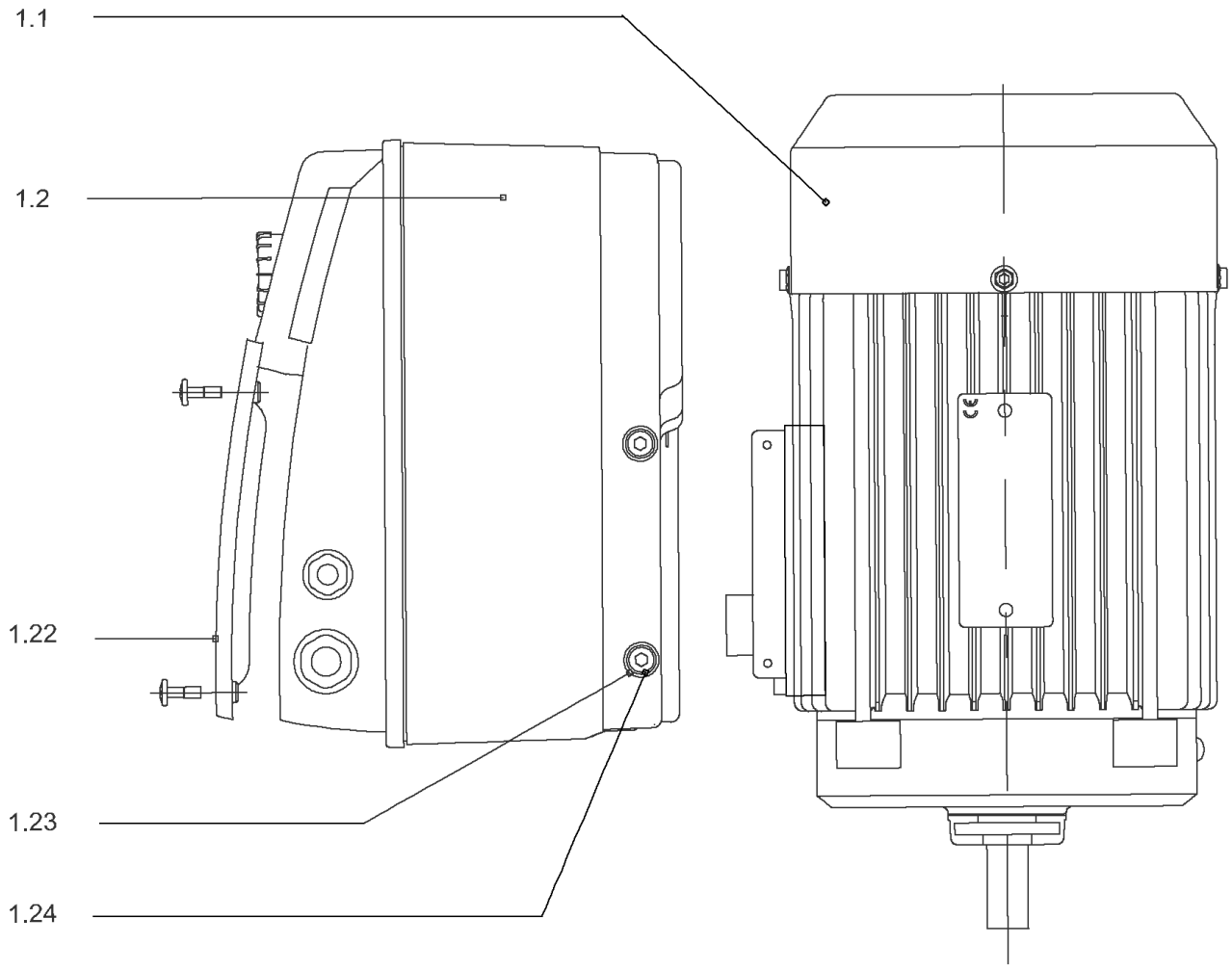
1.1
1.2
1.22
1.23
1.24

## DRIVE HELIXVE3602-5Kw-FF240 IE4-WE KIT

| Item | Article no. | Description | Quantity |
|---|---|---|---|
| 1.1 | 4207928 | MO.5.5/2/132FF240 3~400V 50Hz IE4 WE VP. | 1 |
| | | SPARE PARTS MOTOR:ON REQUEST | 1 |
| 1.2 | 4212635 | MODULE HELIX-VE3602-IE4-WE KIT | 1 |
| 1.22 | 2111344 | > MODULE COVER/GASKET TL5 KIT | 1 |
| 1.23 | 4215716 | > SCREW M5X16 DIN912 8.8 A2A (4pieces) VP. | 1 |
| 1.24 | 2057978 | > RONDELLE A5,3 DIN6797 FST ZN (4 PIECES) | 1 |

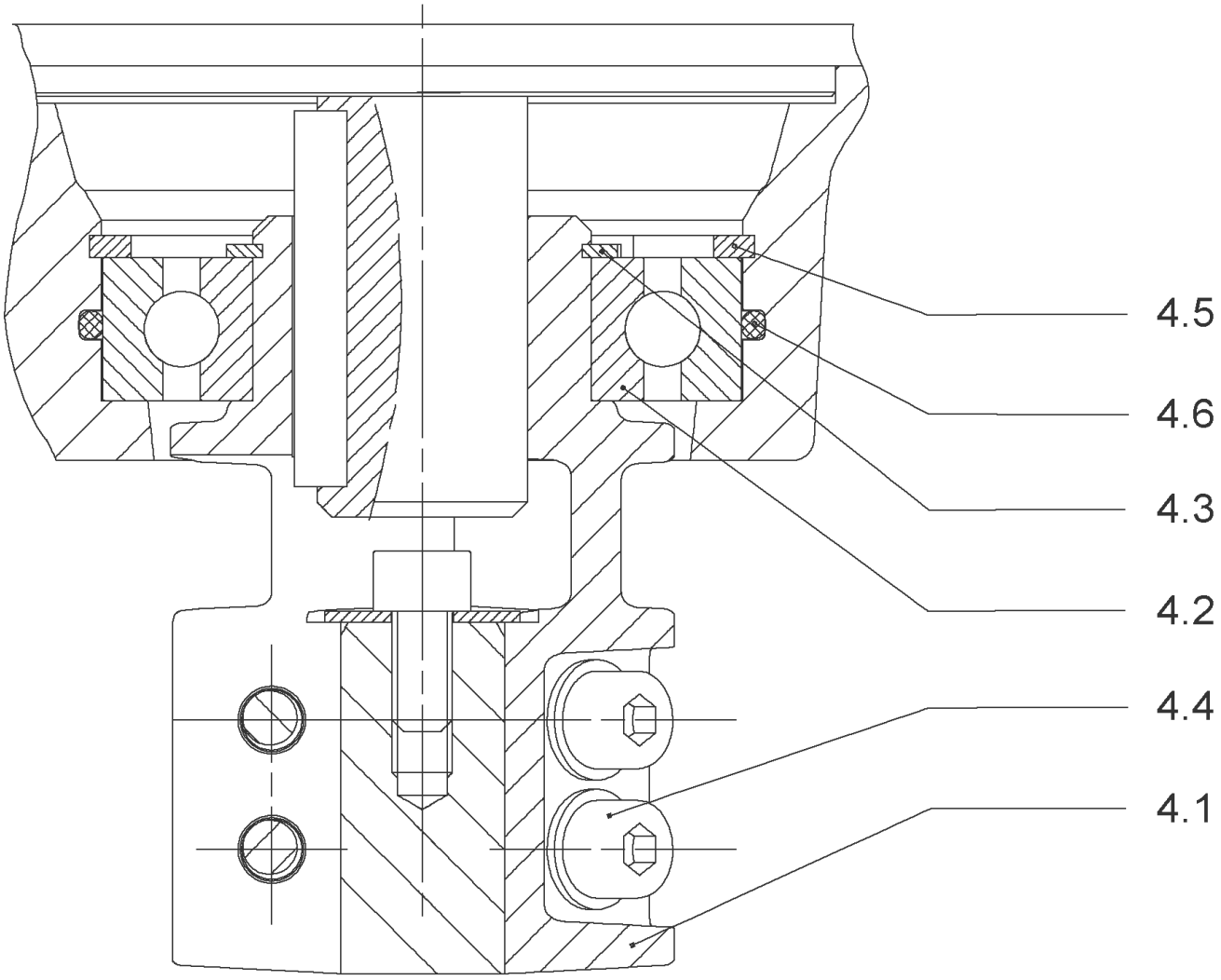
4.5
4.6
4.3
4.2
4.4
4.1

## COUPLING D.22XD.38 FF240T130 HELIX KIT (4186347)

| Item | Article no. | Description | Quantity |
|---|---|---|---|
| 4.1 | | COUPLING-VMI-D22xD38-FF265-MACHINED | 1 |
| 4.2 | 2131017 | BALL BEARING 6310/ZZ-C4(HT)VP. | 1 |
| 4.3 | 4234253 | CIRCLIP-FOR-SHAFT-D50x2 VP. | 1 |
| 4.4 | 4157726 | SCREW KIT M8X30 (4 PIECES) | 1 |
| 4.5 | 4234255 | CIRCLIPS 110X4 VP. | 1 |
| 4.6 | 4233944 | O-RING ID.110 VP. | 1 |
| | | NOMEL CONTACT WASHER 8x16x1,4 STEEL ZC | 1 |

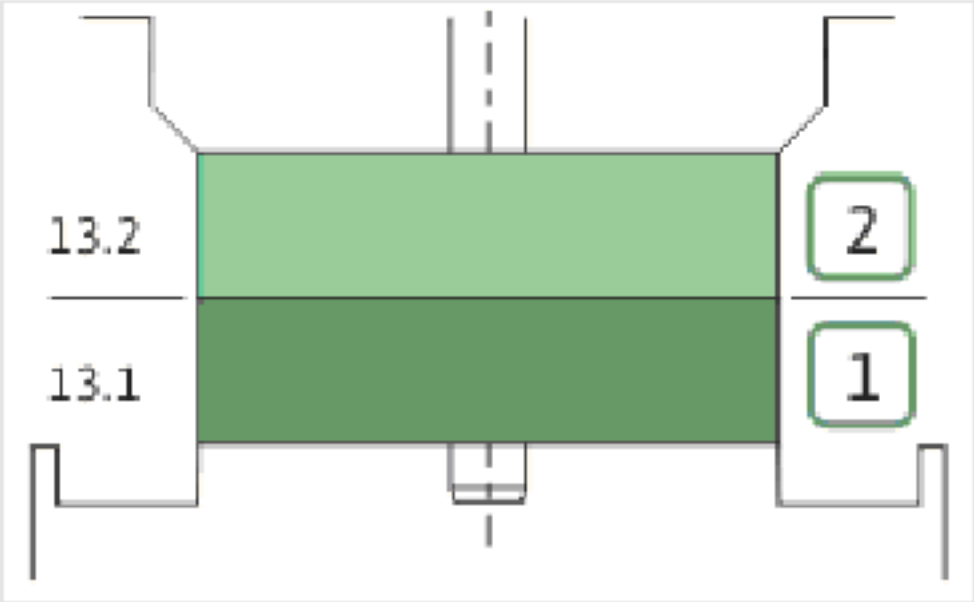
13.2
13.1
2
1

| Item | Article no. | Description | Quantity |
|---|---|---|---|
| 13.1 | 4161192 | INTERMEDIATE STAGE HELIX V36 1.4301 KIT | 1 |
| | | > SLEEVE-SPACER-D22XL16,66-316L | 1 |
| | | > MACH.BEARING-DIFFUSER+NR-M+36-304 | 1 |
| | | > SHAFT-SLEEVE-D26xD22x16-CW | 1 |
| | | > IMPELLER-H1-M+36-304 | 1 |
| 13.1A | 4161200 | > NECK RING 1.STAGE HELIX V36/52 KIT | 1 |
| | | >> NECK-RING-M+36/52 | 1 |
| | | >> HYDRAULIC SUPPORT CAP M+36/52 304 | 1 |
| | | >> SCREW TCL M3X8 A4 POZIDRIV | 1 |
| 13.2 | 4161194 | UPPER STAGE HELIX 36 1.4301 KIT | 1 |
| | | > STOP COLLAR OF IMPELLER L20-Ø22-316L | 1 |
| | | > IMPELLER-H4-M+36-304 | 1 |
| | | > MACH.-RIGID-STD-DISCH.-CHAMBER-M+36-304 | 1 |

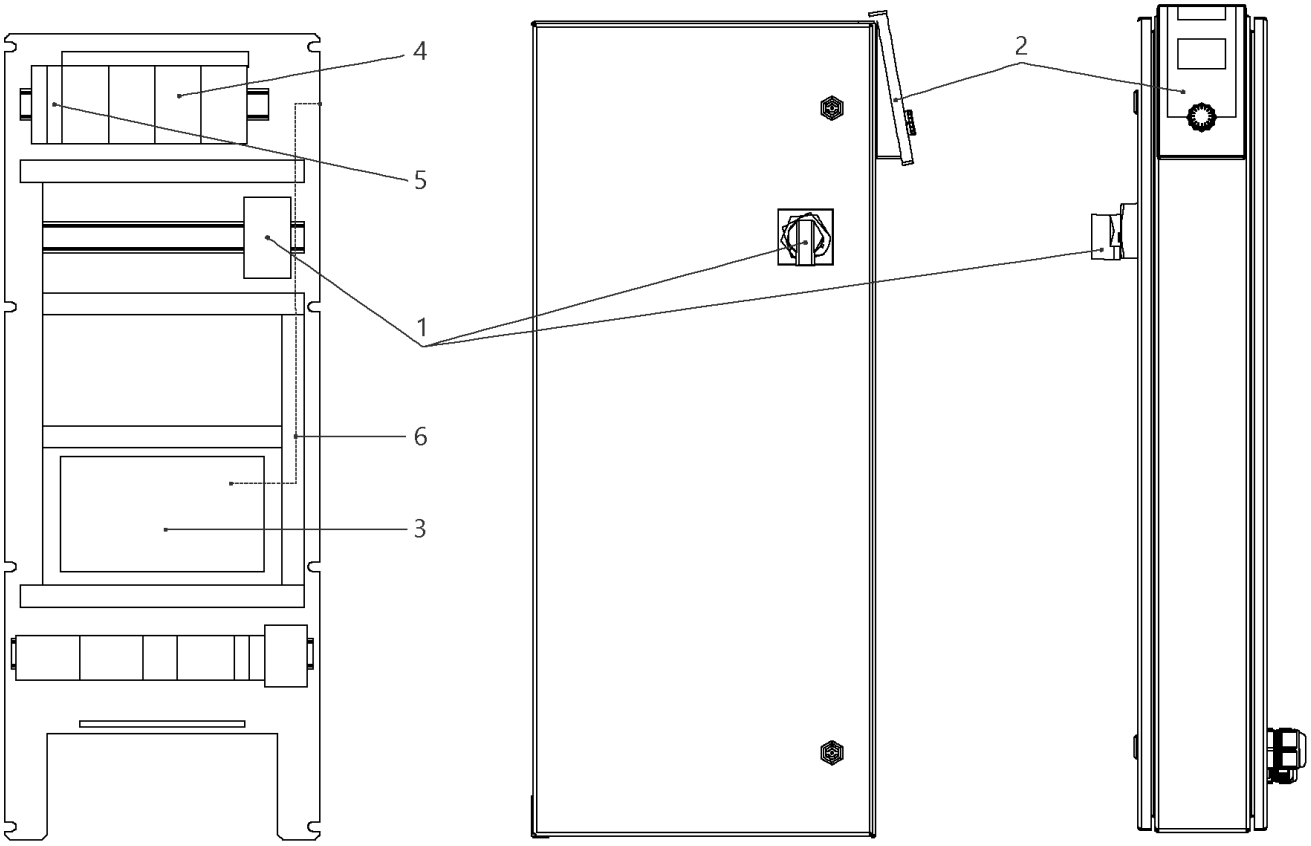
4
5
1
6
3
2

## W-CTRL-SCE-B-2x13A-T34-FM-ND2-AVC-PKG

| Item | Article no. | Description | Quantity |
|---|---|---|---|
| 1 | 2104473 | MAIN SWITCH OT63F3 L105 KIT | 1 |
| Note: TO / BIS / JUSQU'AU 30/06/2015 | | | |
| 1 | 2104470 | MAIN SWITCH OT40F3 L250 KIT | 1 |
| Note: FROM / AB / À PARTIR DU 01/07/2015 | | | |
| 2 | 4184784 | CONTROL PANEL HMI SC KIT | 1 |
| 2 | 4185259 | ASSEMBLY DISPLAY SC PKG VP. | 1 |
| Note: DISPLAY ALONE / PLATINE SEULE | | | |
| 3 | 4185257 | ASSEMBLY CPU SCe Booster VP. | 1 |
| 4 | 2051217 | AUTOM.CIRCUIT BREAKER S203 B16 TO7,5kW | 1 |
| 5 | 2046288 | CIRCUIT BREAKER S201 B16 | 1 |
| 6 | 4194956 | PATCH CABLE RJ45 CAT6 1,0M BLUE SC-PANEL | 1 |

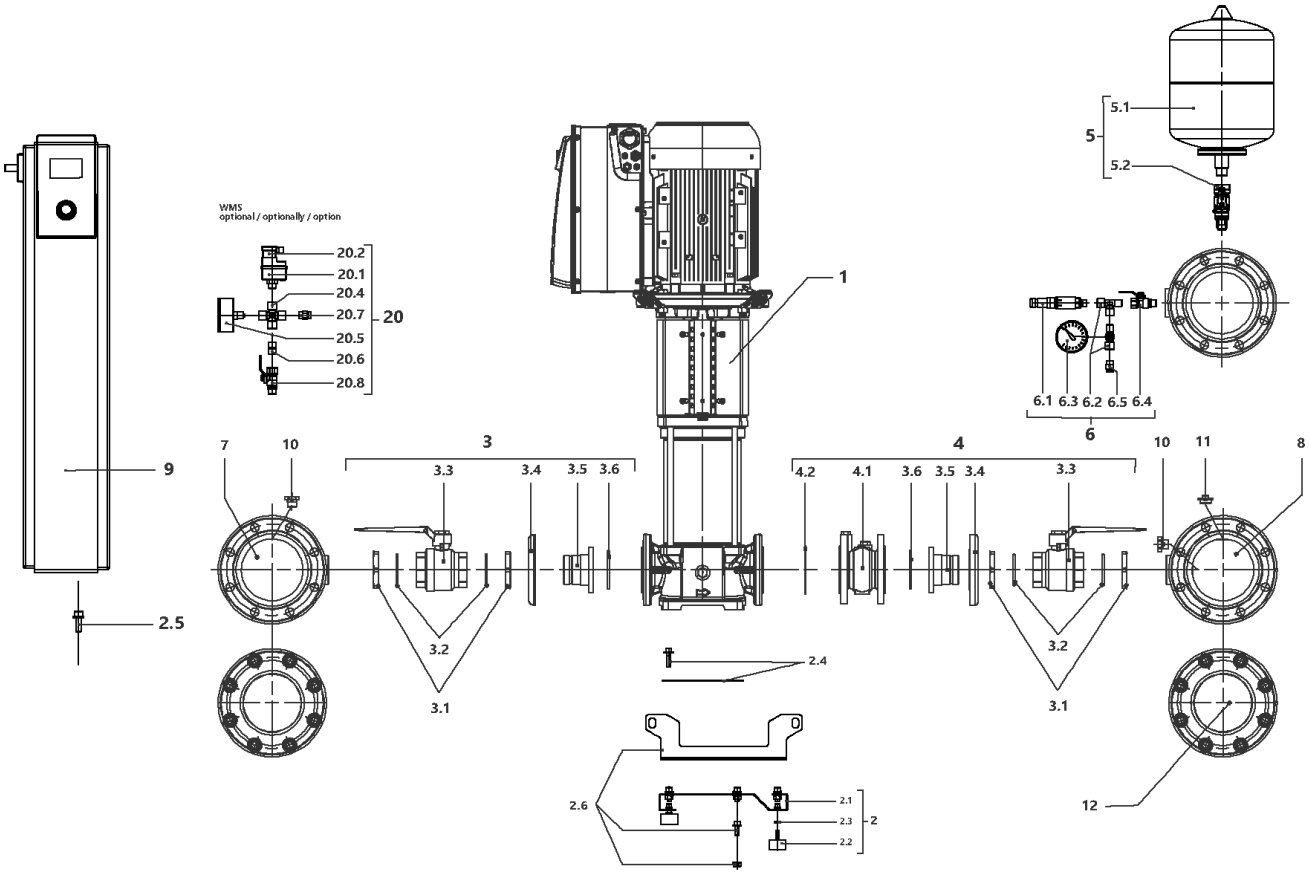
WMS
optional / optionally / option
20.2
20.1
20.4
20.7
20.5
20.6
20.8
20
1
5
5.1
5.2
6.1 6.3 6.2 6.5 6.4
6
9
2.5
7
10
3
3.3
3.4
3.5 3.6
3.2
3.1
4
4.2
4.1
3.6 3.5 3.4
3.3
3.2
3.1
10
11
8
12
2.4
2.6
2.1
2.3
2.2
2

## SiBoost Smart 2HELIX VE3602/7,5kW (2540914)

| Item | Article no. | Description | Quantity |
|---|---|---|---|
| 1 | | HELIX VE3602-7,5-4/16/E/S-FF240 | 1 |
| 2 | 4204890 | BASE PLATE DE2 850x420 M10 KIT | 1 |
| 2.1 | | > BASEPLATE_2x4/6/10/16V_E300_BOX_150 | 1 |
| 2.2 | 2027881 | > VIBRATION DAMPER M.10X20 D.70 | 1 |
| 2.3 | 2028281 | > NUT M10 DIN936 (ISO4035) 17H VZ | 1 |
| 2.4 | 4204891 | > HOLDER PUMP Siboost Smart V36/52 KIT | 1 |
| 2.5 | 4197084 | > HOLDER SWITCHBOX WILO Smart Control KIT | 1 |
| 2.6 | 4203979 | > LIFTING Siboost HELIX 22/36 KIT | 1 |
| 3 | 4204892 | SUCTION SIDE Siboost Helix 36 KIT | 1 |
| 3.1 | 2027123 | > NUT G2½ X15 MS | 1 |
| 3.2 | 2025969 | > O-RING ID.72,39x5,33 EPDM 70SHORE | 1 |
| 3.2 | | > VALVE-BS-2"1/2-F/F-PS25-BRASS-NICK-ACS | 1 |
| 3.4 | 2032973 | > LAPPED FLANGE DN65 1.4301 DIN2642P | 1 |
| 3.5 | | > UNION INSERT DN65-G21/2" FLANGE AISI304 | 1 |
| 3.6 | 2028296 | > O-RING ID.91,44x5,33 EPDM 70SHORE | 1 |
| 4 | 4204894 | DELIVERY SIDE Siboost Helix 36 KIT | 1 |
| 3.1 | 2027123 | > NUT G2½ X15 MS | 1 |
| 3.2 | 2025969 | > O-RING ID.72,39x5,33 EPDM 70SHORE | 1 |
| 3.3 | | > VALVE-BS-2"1/2-F/F-PS25-BRASS-NICK-ACS | 1 |
| Note: accessories see price list/Zubehör siehe | | | |
| 3.4 | 2032973 | > LAPPED FLANGE DN65 1.4301 DIN2642P | 1 |
| 3.5 | | > UNION INSERT DN65-G21/2" FLANGE AISI304 | 1 |
| Note: accessories see price list/Zubehör siehe | | | |
| 3.6 | 2028296 | > O-RING ID.91,44x5,33 EPDM 70SHORE | 1 |
| 4.1 | 2127586 | > NON RETURN VALVE DN65 PN16 TYP402B VP. | 1 |
| 4.2 | 2119912 | > GASKET D.77/127X2 DN65 C4430 VP. | 1 |
| 5 | 4203983 | DIAPHREM TANK 8L/PN16 DIN4807/T5 KIT | 1 |
| 5.1 | 2045914 | > DIAPHREM TANK 8L TYP-DD 16BAR | 1 |
| 5.2 | 4189350 | > FLOW FITTING G3/4 FOR DIAPHRAG VESSEL VP | 1 |
| 6 | 4197076 | PRESSURE SENSOR/ GAUGE 0-16BAR KIT | 1 |
| 6.1 | 2085909 | > PRESS.SENSOR 1/4" 0-16BAR 4-20MA VP. | 1 |
| 6.2 | 4197077 | > T-PIECE 1/4" VP. | 1 |
| 6.3 | 2028692 | > PRESSURE GAUGE NG63-PN16-G1/4 | 1 |
| 6.4 | 2028291 | > BALL TAP R1/4" PN42 GIACOMINI R254DL | 1 |

| Item | Article no. | Description | Quantity |
|---|---|---|---|
| 6.5 | 2028691 | > BLOWGUN 1/4" MS 30BAR VP. | 1 |
| 7 | 4204895 | PIPE DE2 DN100-2x21/2"+2x1/4x800 VP. | 1 |
| 8 | 4204896 | PIPE DE2 DN100-2x21/2"+1x1/4+1x3/4x800 | 1 |
| 9 | | W-CTRL-SCE-B-2x16A-T34-FM-ND2-AVC-PKG | 1 |
| 10 | 4197079 | PLUG G1/4"x10 AISI304 KIT | 1 |
| 11 | 2032654 | PLUG R3/4" MS VIEGA 1751 | 1 |
| 12 | 4203989 | BLIND-FLANGE DN100 PN16 -1.4301 KIT | 1 |
| | 2094573 | > NUT M16 DIN934 A2 1.4301 VP. | 1 |
| | 2107590 | > SCREW M16x70 DIN933 A2 (8 PIECES) | 1 |
| | 2094572 | > WASHER A17 DIN125 A2 1.4301 VP. | 1 |
| | | > FULL FLANGE ST.DN100 PN16 EN1092-1/05 A2 | 1 |
| | | > FLANGE COVER DN100 DIN 3443 FORM A | 1 |
| | 2106342 | > FLAT GASKET D.120/162X2 DN100 C4430 VP. | 1 |
| 20 | | ASSEMBLY WMS. DE-EB. +VP | 1 |
| 20.1 | 2028652 | > PRESSURE SWITCH PS3-ASR 1/(1,3) VP. | 1 |
| 20.2 | 2130983 | > PLUG PS3-415 WITH KABEL 1,5M 2NO VP. | 1 |
| 20.4 | 2028290 | > CROSSPIECE R1/4" MS-NICKEL | 1 |
| 20.5 | 2028687 | > PRESSURE GAUGE NG63 R1/4" HI.0-6BAR | 1 |
| 20.6 | 2054268 | > DUAL NIPPLE G1/4" x G1/4" MS VP. | 1 |
| 20.7 | 2028691 | > BLOWGUN 1/4" MS 30BAR VP. | 1 |
| 20.8 | 2028291 | > BALL TAP R1/4" PN42 GIACOMINI R254DL | 1 |

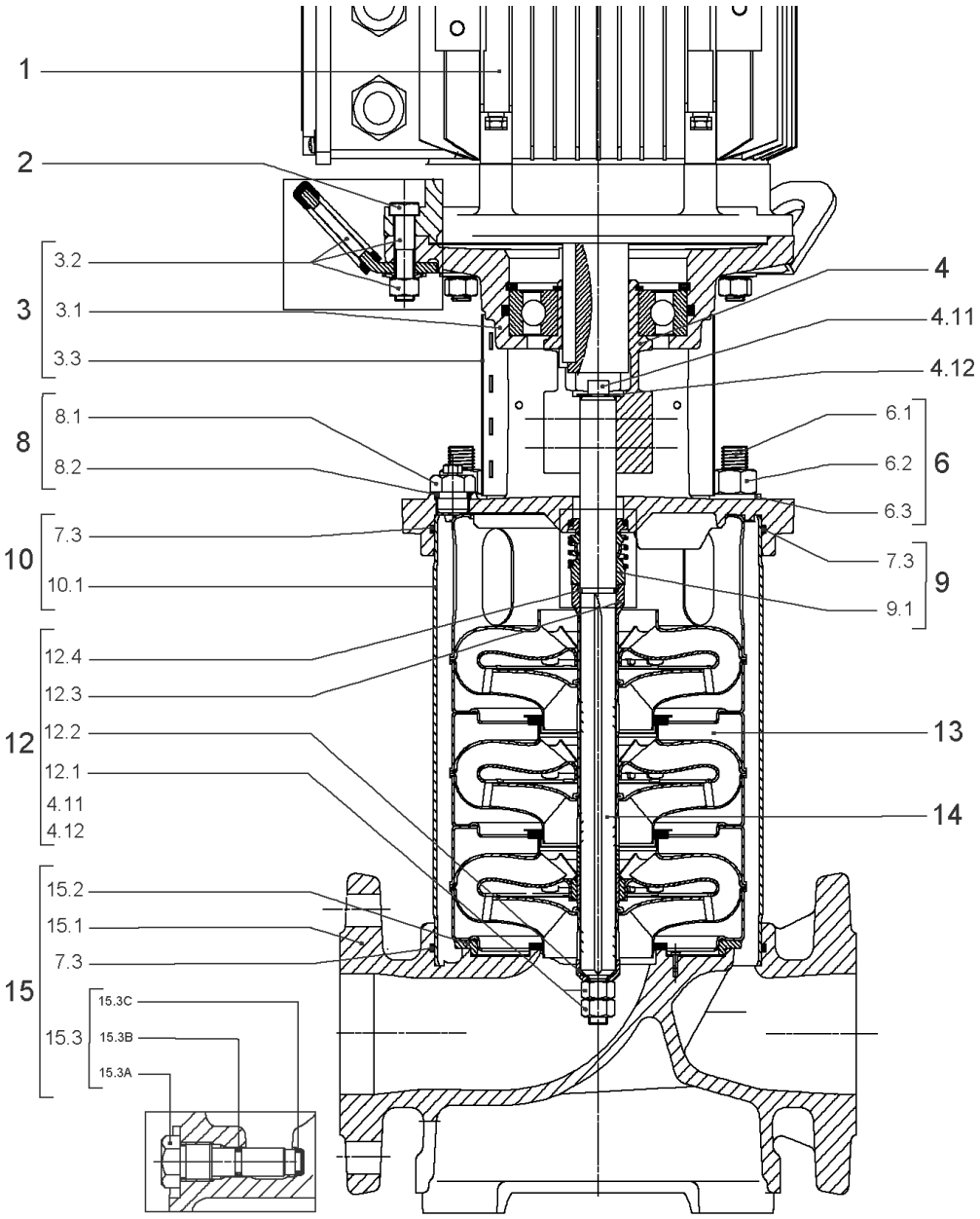
1
2
3
3.2
3.1
3.3
8
8.1
8.2
10
7.3
10.1
12
12.4
12.3
12.2
12.1
4.11
4.12
15
15.2
15.1
7.3
15.3
15.3C
15.3B
15.3A
4
4.11
4.12
6
6.1
6.2
6.3
9
7.3
9.1
13
14

| Item | Article no. | Description | Quantity |
|---|---|---|---|
| 1 | | DRIVE HELIX-VE3602-FF240-IE2-ATB KIT | 1 |
| Note: MOTOR BRAND ATB | | | |
| 1 | | DRIVE HELIXVE3602-7Kw-FF240 IE4-WE KIT | 1 |
| Note: MOTOR BRAND WILO ELEC | | | |
| | | SPARE PARTS MOTOR:ON REQUEST | 1 |
| 2 | 4174093 | SCREW M12X50 (4 PIECES) | 1 |
| 3 | 4186358 | LANTERN HELIX OPTI 8" FF240 KIT | 1 |
| 3.1 | | > M+8_LANTERN_ONE-PIECE_FF240_CATA_DWA | 1 |
| 3.2 | 4186346 | > EYELET CPL.FF240 HELIX (4 PIECES) | 1 |
| 3.3 | 4184853 | > COUPLING PROTECTOR FT HELIX 8'' KIT | 1 |
| 4 | 4186347 | COUPLING D.22XD.38 FF240T130 HELIX KIT | 1 |
| 6 | 4181156 | STUD BOLT M16X233 KIT | 1 |
| 6.1 | | > TIE BOLT M16-233x24x44-1.4057 | 1 |
| 6.2 | 4179562 | > NUT M16 8.8 ISO4032 (4 PIECES) | 1 |
| 6.3 | 4097852 | > WASHER-CS-16.4-32-2.8-NFE25-511-A2 | 1 |
| 8 | 4186377 | FILING/PURGING PLUG 304 HELIX KIT | 1 |
| 8.1 | | > FILLING/VENTING-PLUG-MVI8/10"-304 | 1 |
| 8.2 | 4032291 | > O-RING 17x3 EPDM KTW/WRC | 1 |
| 9 | 4192148 | SEAL-KIT-HELIX22-36-52 FIRST O/E | 1 |
| 7.3 | 4179571 | > O-RING HOUSING PIPE HELIX22/36/52 VP. | 1 |
| 9.1 | 4179573 | > M.SEAL.HELIX22-36-52 O/E VP. | 1 |
| 10 | 4181070 | HOUSING PIPE D.204X197 1.4307 KIT | 1 |
| 7.3 | 4179571 | > O-RING HOUSING PIPE HELIX22/36/52 VP. | 1 |
| 10.1 | | > HOUSING-PIPE Ø204-M+3602-304 | 1 |
| 12 | 4186374 | SHAFT EQUIPMENT HELIX 36 FIRST KIT | 1 |
| 13 | | HYDRAULIC HELIX V 3602 | 1 |
| 14 | 4186343 | SHAFT D.22X301 1.4057 VP. | 1 |
| 15 | 4186381 | EQUIPED HOUSING HELIX OPTI DN65 GJL KIT | 1 |
| 15.1 | | > PUMP CASING MONO.M+8" DN65 PN16 DWA | 1 |
| 15.2 | | > HYD.SUP.M+8" MONO.HOUSING DN65 DWA | 1 |
| 15.3 | 4106048 | > DRAIN/PRIMING PLUG EPDM HELIX FIRST KIT | 1 |
| 15.3A | | >> DRAIN AND PRIMING PLUG-VMI10"-304 | 1 |
| 15.3B | 4032293 | >> O-RING-10x3-EPDM-KTW/WRC | 1 |
| 15.3C | 4233957 | >> O-RING ID.9 EPDM VP. | 1 |

| Item | Article no. | Description | Quantity |
|---|---|---|---|
| 7.3 | 4179571 | > O-RING HOUSING PIPE HELIX22/36/52 VP. | 1 |
| 13.1A | 4161200 | > NECK RING 1.STAGE HELIX V36/52 KIT | 1 |
| | | >> NECK-RING-M+36/52 | 1 |
| | | >> HYDRAULIC SUPPORT CAP M+36/52 304 | 1 |
| | | >> SCREW TCL M3X8 A4 POZIDRIV | 1 |

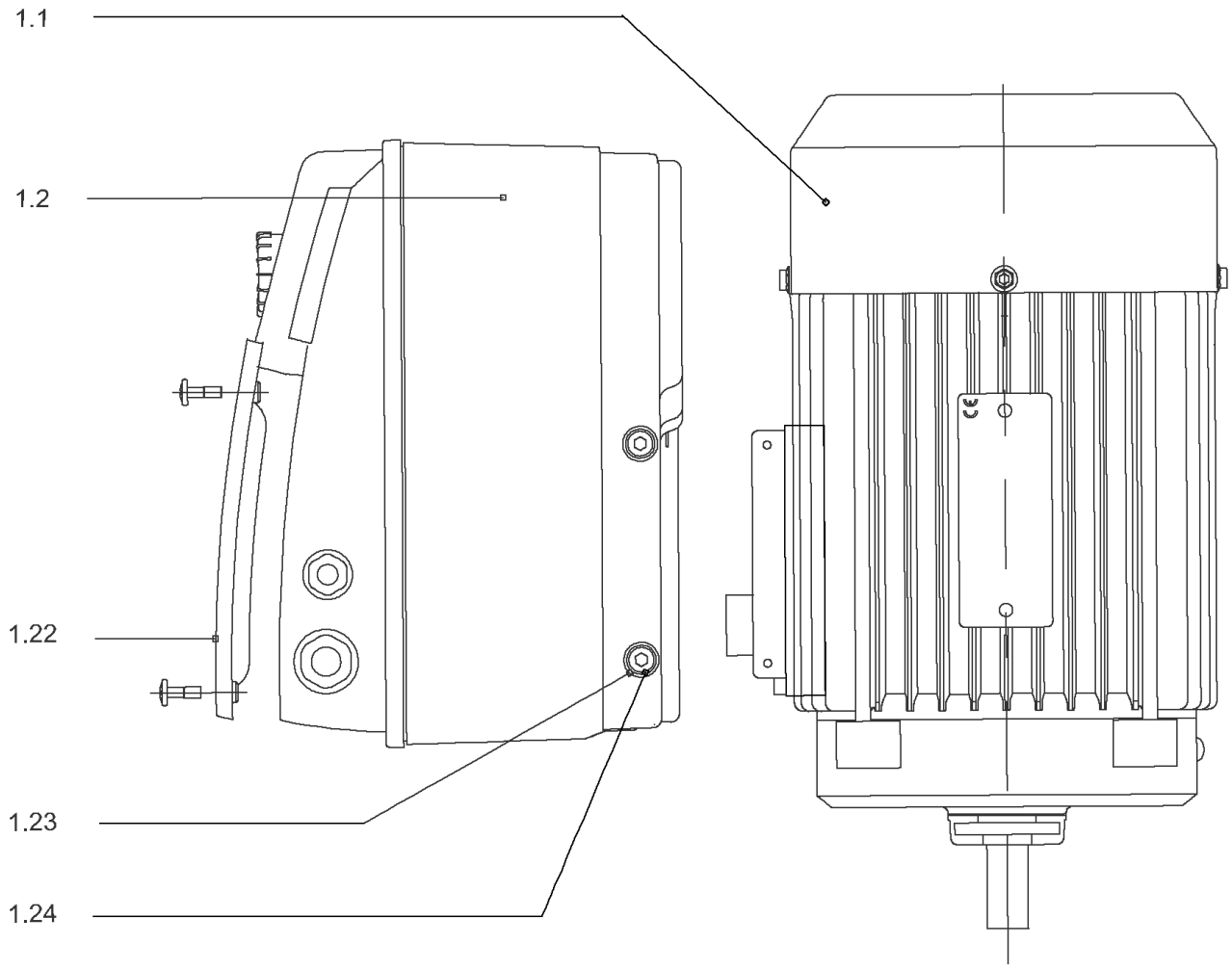
1.1
1.2
1.22
1.23
1.24

## DRIVE HELIX-VE3602-FF240-IE2-ATB KIT

| Item | Article no. | Description | Quantity |
|---|---|---|---|
| 1.1 | | MOTOR 7,5/2/132 FF240 3~380V 60HZ IE2 VP | 1 |
| Note: no longer available/nicht mehrlieferbar/n'est plus disponible | | | |
| | | SPARE PARTS MOTOR:ON REQUEST | 1 |
| 1.2 | 4195909 | MODULE HELIX-VE3602-7.5-IE2-ATB KIT | 1 |
| 1.22 | 2111344 | > MODULE COVER/GASKET TL5 KIT | 1 |
| 1.23 | 4215716 | > SCREW M5X16 DIN912 8.8 A2A (4pieces) VP. | 1 |
| 1.24 | 2057978 | > RONDELLE A5,3 DIN6797 FST ZN (4 PIECES) | 1 |

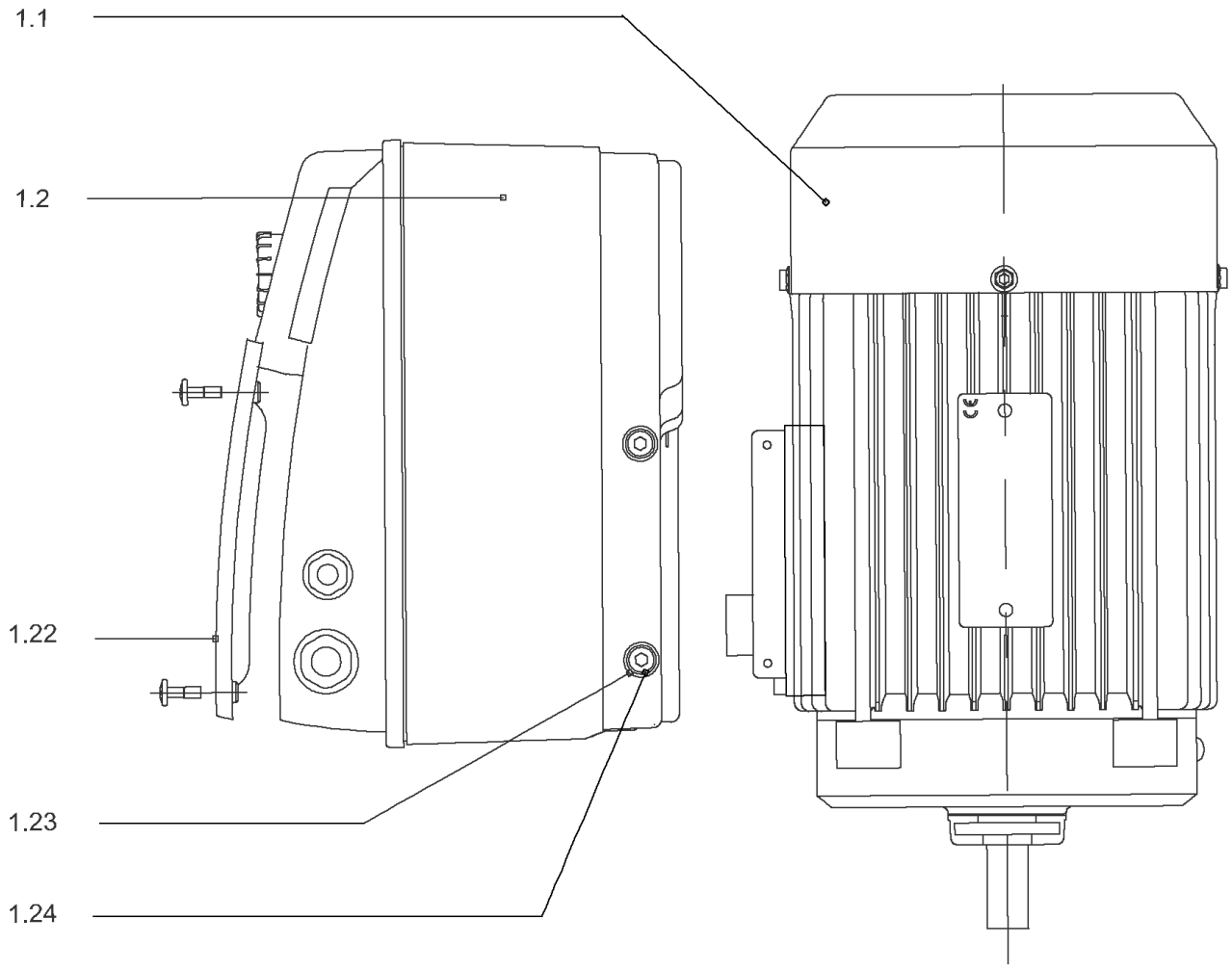
1.1
1.2
1.22
1.23
1.24

## DRIVE HELIXVE3602-7Kw-FF240 IE4-WE KIT

| Item | Article no. | Description | Quantity |
|---|---|---|---|
| 1.1 | 4207940 | MO.7.5/2/132FF240 3~380V 60Hz IE4 WE VP. | 1 |
| | | SPARE PARTS MOTOR:ON REQUEST | 1 |
| 1.2 | 4212640 | MODULE HELIX-VE3602-IE4-WE KIT | 1 |
| 1.22 | 2111344 | > MODULE COVER/GASKET TL5 KIT | 1 |
| 1.23 | 4215716 | > SCREW M5X16 DIN912 8.8 A2A (4pieces) VP. | 1 |
| 1.24 | 2057978 | > RONDELLE A5,3 DIN6797 FST ZN (4 PIECES) | 1 |

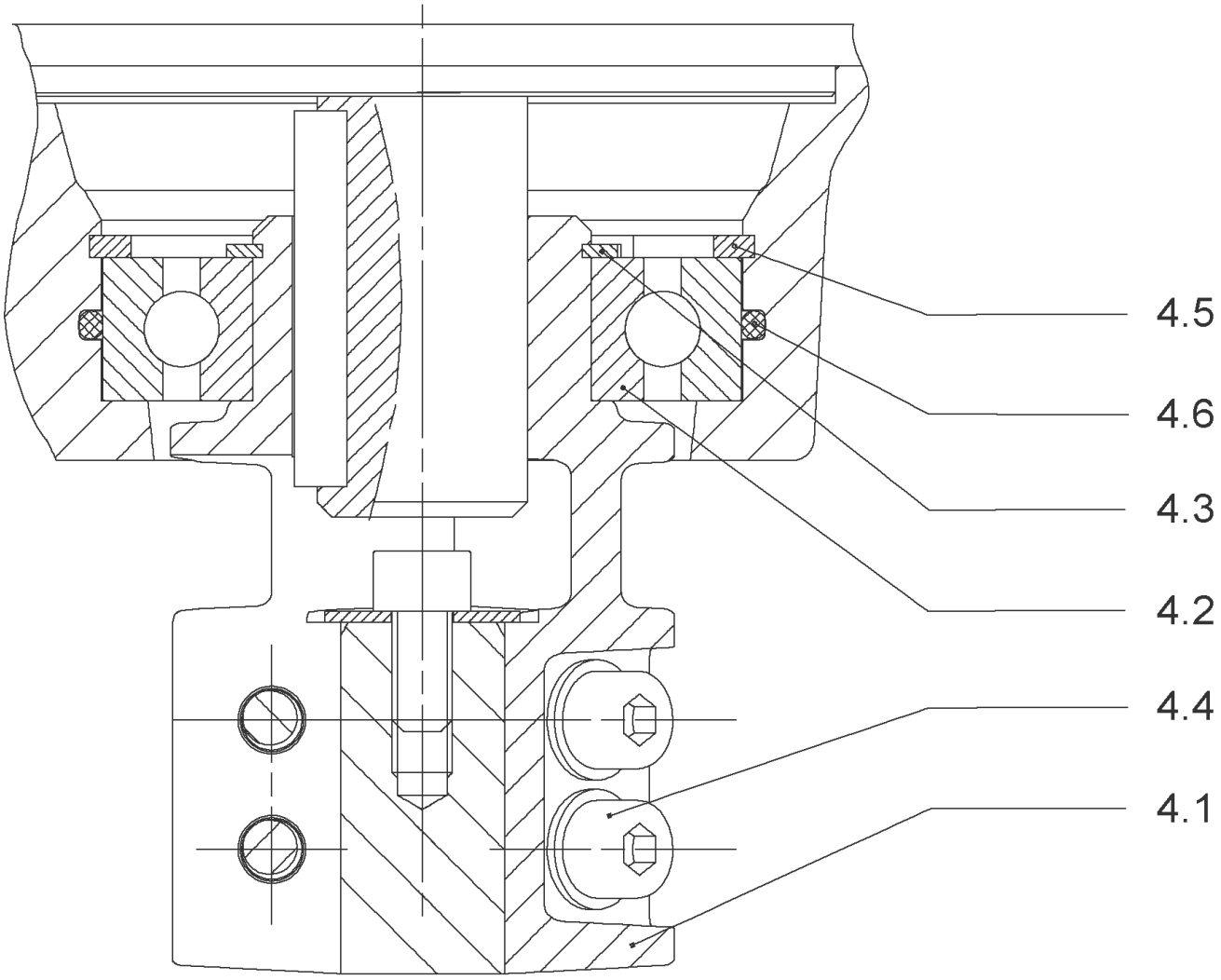
4.5
4.6
4.3
4.2
4.4
4.1

## COUPLING D.22XD.38 FF240T130 HELIX KIT (4186347)

| Item | Article no. | Description | Quantity |
|---|---|---|---|
| 4.1 | | COUPLING-VMI-D22xD38-FF265-MACHINED | 1 |
| 4.2 | 2131017 | BALL BEARING 6310/ZZ-C4(HT)VP. | 1 |
| 4.3 | 4234253 | CIRCLIP-FOR-SHAFT-D50x2 VP. | 1 |
| 4.4 | 4157726 | SCREW KIT M8X30 (4 PIECES) | 1 |
| 4.5 | 4234255 | CIRCLIPS 110X4 VP. | 1 |
| 4.6 | 4233944 | O-RING ID.110 VP. | 1 |
| | | NOMEL CONTACT WASHER 8x16x1,4 STEEL ZC | 1 |

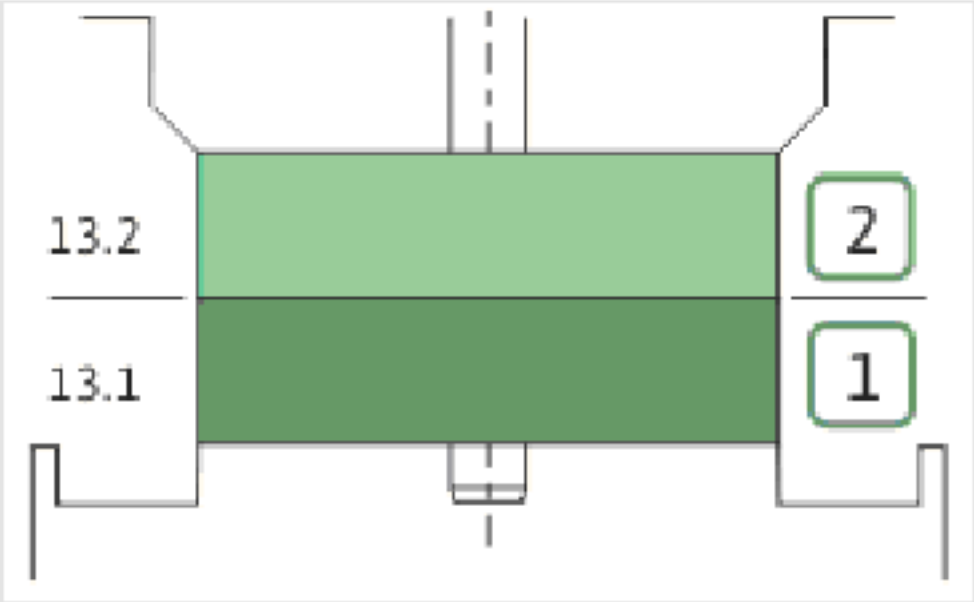
13.2
13.1
2
1

| Item | Article no. | Description | Quantity |
|---|---|---|---|
| 13.1 | 4161192 | INTERMEDIATE STAGE HELIX V36 1.4301 KIT | 1 |
| | | > SLEEVE-SPACER-D22XL16,66-316L | 1 |
| | | > MACH.BEARING-DIFFUSER+NR-M+36-304 | 1 |
| | | > SHAFT-SLEEVE-D26xD22x16-CW | 1 |
| | | > IMPELLER-H1-M+36-304 | 1 |
| 13.1A | 4161200 | > NECK RING 1.STAGE HELIX V36/52 KIT | 1 |
| | | >> NECK-RING-M+36/52 | 1 |
| | | >> HYDRAULIC SUPPORT CAP M+36/52 304 | 1 |
| | | >> SCREW TCL M3X8 A4 POZIDRIV | 1 |
| 13.2 | 4161194 | UPPER STAGE HELIX 36 1.4301 KIT | 1 |
| | | > STOP COLLAR OF IMPELLER L20-Ø22-316L | 1 |
| | | > IMPELLER-H4-M+36-304 | 1 |
| | | > MACH.-RIGID-STD-DISCH.-CHAMBER-M+36-304 | 1 |

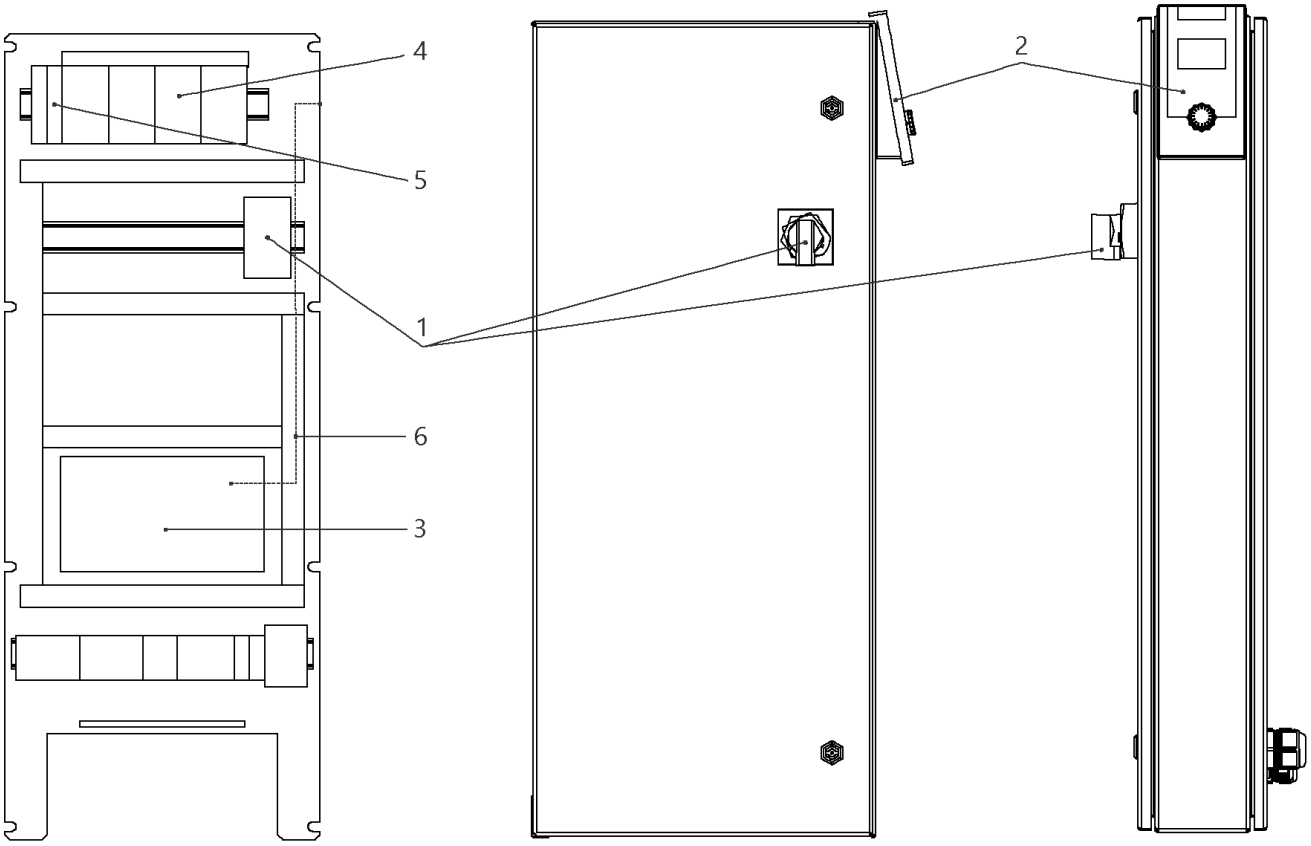
4
5
1
6
3
2

## W-CTRL-SCE-B-2x16A-T34-FM-ND2-AVC-PKG

| Item | Article no. | Description | Quantity |
|---|---|---|---|
| 1 | 2104473 | MAIN SWITCH OT63F3 L105 KIT | 1 |
| Note: TO / BIS / JUSQU'AU 30/06/2015 | | | |
| 1 | 2104470 | MAIN SWITCH OT40F3 L250 KIT | 1 |
| Note: FROM / AB / À PARTIR DU 01/07/2015 | | | |
| 2 | 4184784 | CONTROL PANEL HMI SC KIT | 1 |
| 2 | 4185259 | ASSEMBLY DISPLAY SC PKG VP. | 1 |
| Note: DISPLAY ALONE / PLATINE SEULE | | | |
| 3 | 4185257 | ASSEMBLY CPU SCe Booster VP. | 1 |
| 4 | 4197832 | AUTOMATIC CIRCUIT BREAKER S203 B20 VP. | 1 |
| 5 | 2046288 | CIRCUIT BREAKER S201 B16 | 1 |
| 6 | 4194956 | PATCH CABLE RJ45 CAT6 1,0M BLUE SC-PANEL | 1 |

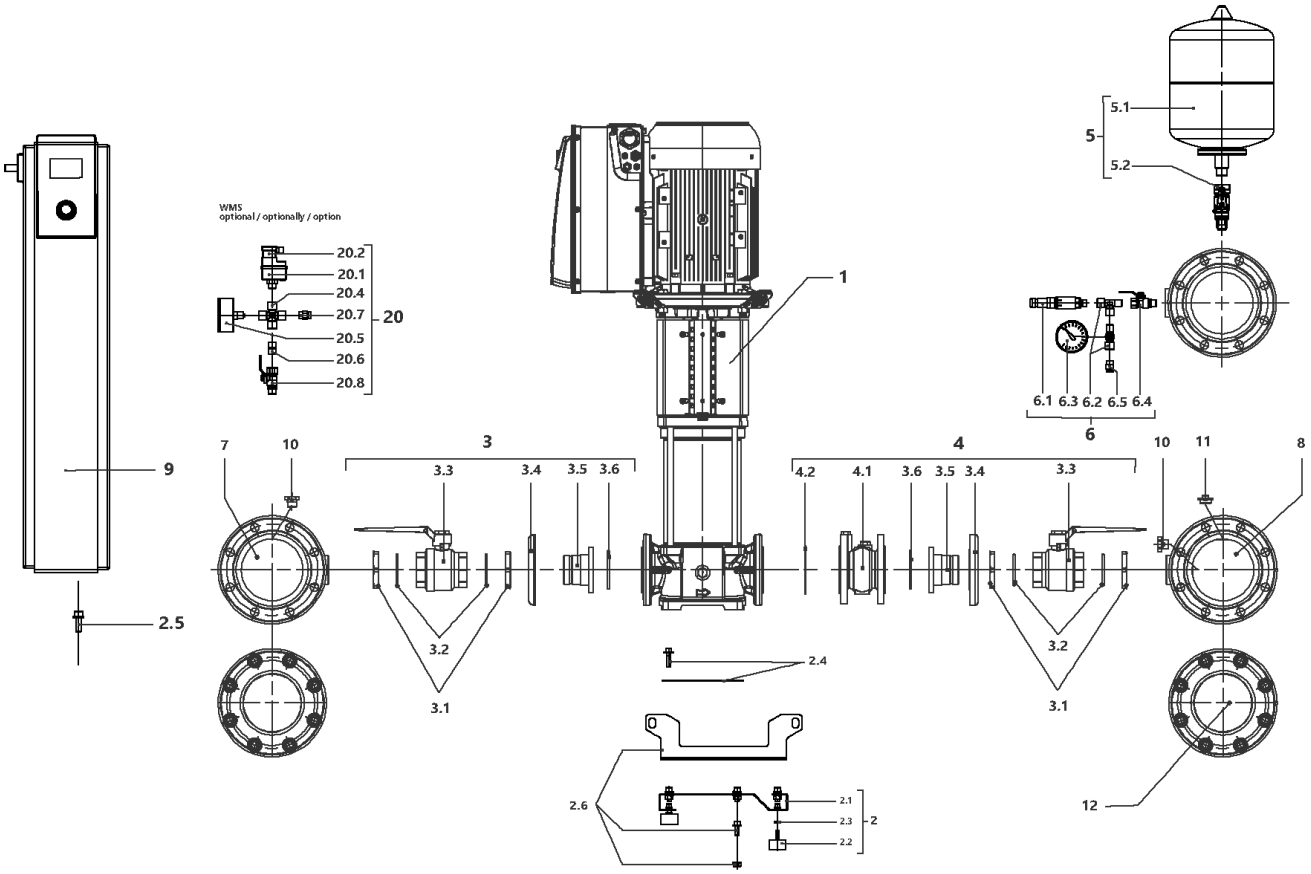
WMS
optional / optionally / option
20.2
20.1
20.4
20.7
20.5
20.6
20.8
20
1
5.1
5
5.2
6.1 6.3 6.2 6.5 6.4
6
9
7
10
3
3.3
3.4
3.5 3.6
4
4.2
4.1
3.6 3.5 3.4
3.3
10
11
8
2.5
3.2
3.1
2.4
3.2
3.1
2.6
2.1
2.3
2.2
2
12

## SiBoost Smart 2HELIX VE3604 (2540915)

| Item | Article no. | Description | Quantity |
|---|---|---|---|
| 1 | | HELIX VE3604-4/16/E/KS/2G | 1 |
| 2 | 4204893 | BASE PLATE DE2 1250x420 M10 KIT | 1 |
| 2.1 | | > BASE_FR_2x22-52V500L400BOX150-250 | 1 |
| 2.2 | 2027881 | > VIBRATION DAMPER M.10X20 D.70 | 1 |
| 2.3 | 2028281 | > NUT M10 DIN936 (ISO4035) 17H VZ | 1 |
| 2.4 | 4204891 | > HOLDER PUMP Siboost Smart V36/52 KIT | 1 |
| 2.5 | 4197084 | > HOLDER SWITCHBOX WILO Smart Control KIT | 1 |
| 2.6 | 4203979 | > LIFTING Siboost HELIX 22/36 KIT | 1 |
| 3 | 4204892 | SUCTION SIDE Siboost Helix 36 KIT | 1 |
| 3.1 | 2027123 | > NUT G2½ X15 MS | 1 |
| 3.2 | 2025969 | > O-RING ID.72,39x5,33 EPDM 70SHORE | 1 |
| 3.2 | | > VALVE-BS-2"1/2-F/F-PS25-BRASS-NICK-ACS | 1 |
| 3.4 | 2032973 | > LAPPED FLANGE DN65 1.4301 DIN2642P | 1 |
| 3.5 | | > UNION INSERT DN65-G21/2" FLANGE AISI304 | 1 |
| 3.6 | 2028296 | > O-RING ID.91,44x5,33 EPDM 70SHORE | 1 |
| 4 | 4204894 | DELIVERY SIDE Siboost Helix 36 KIT | 1 |
| 3.1 | 2027123 | > NUT G2½ X15 MS | 1 |
| 3.2 | 2025969 | > O-RING ID.72,39x5,33 EPDM 70SHORE | 1 |
| 3.3 | | > VALVE-BS-2"1/2-F/F-PS25-BRASS-NICK-ACS | 1 |
| Note: accessories see price list/Zubehör siehe | | | |
| 3.4 | 2032973 | > LAPPED FLANGE DN65 1.4301 DIN2642P | 1 |
| 3.5 | | > UNION INSERT DN65-G21/2" FLANGE AISI304 | 1 |
| Note: accessories see price list/Zubehör siehe | | | |
| 3.6 | 2028296 | > O-RING ID.91,44x5,33 EPDM 70SHORE | 1 |
| 4.1 | 2127586 | > NON RETURN VALVE DN65 PN16 TYP402B VP. | 1 |
| 4.2 | 2119912 | > GASKET D.77/127X2 DN65 C4430 VP. | 1 |
| 5 | 4203983 | DIAPHREM TANK 8L/PN16 DIN4807/T5 KIT | 1 |
| 5.1 | 2045914 | > DIAPHREM TANK 8L TYP-DD 16BAR | 1 |
| 5.2 | 4189350 | > FLOW FITTING G3/4 FOR DIAPHRAG VESSEL VP | 1 |
| 6 | 4197076 | PRESSURE SENSOR/ GAUGE 0-16BAR KIT | 1 |
| 6.1 | 2085909 | > PRESS.SENSOR 1/4" 0-16BAR 4-20MA VP. | 1 |
| 6.2 | 4197077 | > T-PIECE 1/4" VP. | 1 |
| 6.3 | 2028692 | > PRESSURE GAUGE NG63-PN16-G1/4 | 1 |
| 6.4 | 2028291 | > BALL TAP R1/4" PN42 GIACOMINI R254DL | 1 |

| Item | Article no. | Description | Quantity |
|---|---|---|---|
| 6.5 | 2028691 | > BLOWGUN 1/4" MS 30BAR VP. | 1 |
| 7 | 4204905 | PIPE DE2 DN100-2x21/2"+1x1/4x1000 VP. | 1 |
| 8 | 4204906 | PIPE DE2 DN100-2x21/2"+1x1/4+1x3/4x1000 | 1 |
| 9 | | W-CTRL-SCE-B-2x24A-T34-FM-ND2-AVC-PKG | 1 |
| 10 | 4197079 | PLUG G1/4"x10 AISI304 KIT | 1 |
| 11 | 2032654 | PLUG R3/4" MS VIEGA 1751 | 1 |
| 12 | 4203989 | BLIND-FLANGE DN100 PN16 -1.4301 KIT | 1 |
| | 2094573 | > NUT M16 DIN934 A2 1.4301 VP. | 1 |
| | 2107590 | > SCREW M16x70 DIN933 A2 (8 PIECES) | 1 |
| | 2094572 | > WASHER A17 DIN125 A2 1.4301 VP. | 1 |
| | | > FULL FLANGE ST.DN100 PN16 EN1092-1/05 A2 | 1 |
| | | > FLANGE COVER DN100 DIN 3443 FORM A | 1 |
| | 2106342 | > FLAT GASKET D.120/162X2 DN100 C4430 VP. | 1 |
| 20 | | ASSEMBLY WMS. DE-EB. +VP | 1 |
| 20.1 | 2028652 | > PRESSURE SWITCH PS3-ASR 1/(1,3) VP. | 1 |
| 20.2 | 2130983 | > PLUG PS3-415 WITH KABEL 1,5M 2NO VP. | 1 |
| 20.4 | 2028290 | > CROSSPIECE R1/4" MS-NICKEL | 1 |
| 20.5 | 2028687 | > PRESSURE GAUGE NG63 R1/4" HI.0-6BAR | 1 |
| 20.6 | 2054268 | > DUAL NIPPLE G1/4" x G1/4" MS VP. | 1 |
| 20.7 | 2028691 | > BLOWGUN 1/4" MS 30BAR VP. | 1 |
| 20.8 | 2028291 | > BALL TAP R1/4" PN42 GIACOMINI R254DL | 1 |

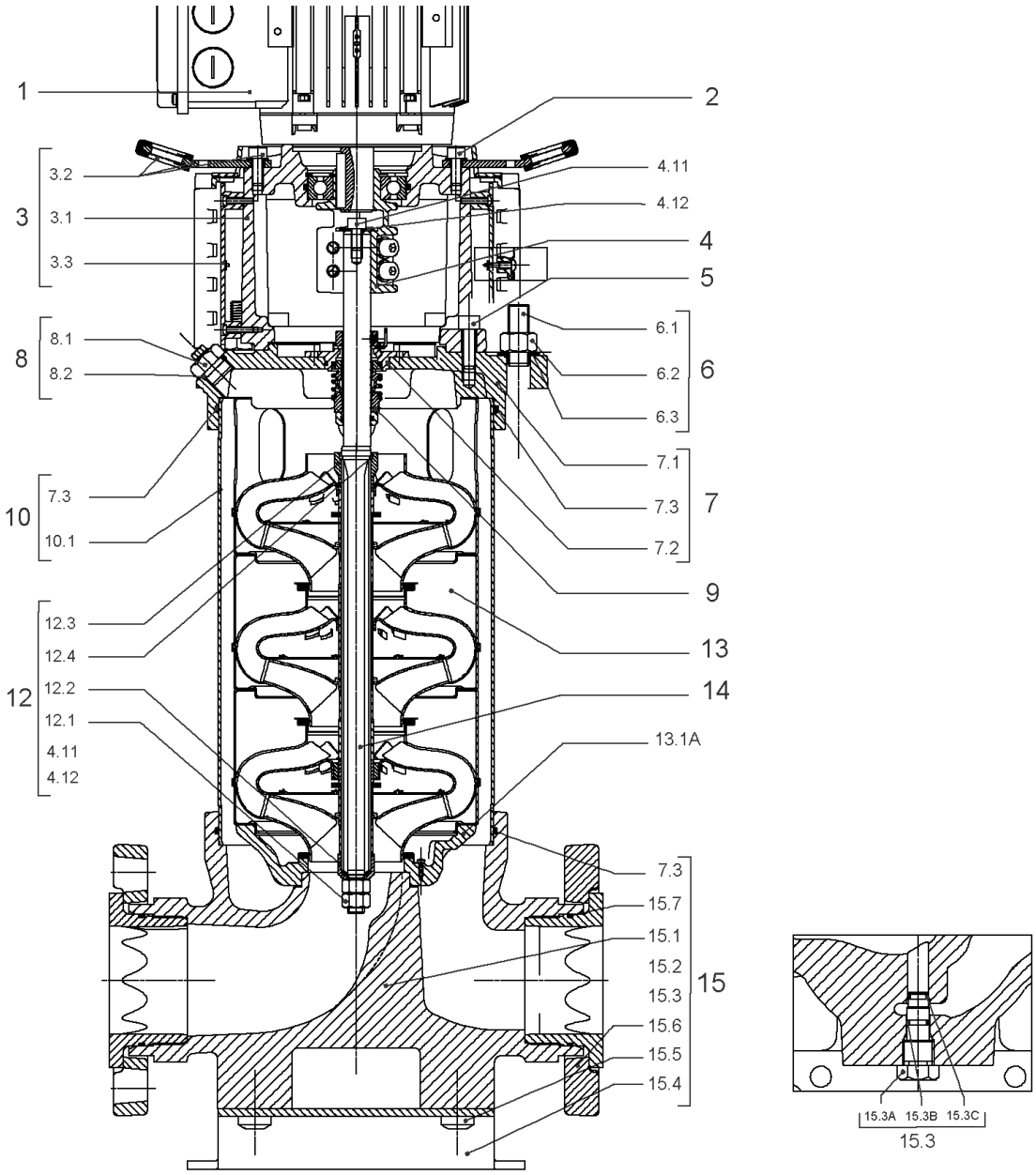
1
2
3
3.2
3.1
3.3
4.11
4.12
4
5
8
8.1
8.2
6.1
6.2
6.3
6
7.1
7.3
7.2
7
10
7.3
10.1
9
12.3
12.4
12.2
12.1
4.11
4.12
12
13
14
13.1A
7.3
15.7
15.1
15.2
15.3
15.6
15.5
15.4
15
15.3A
15.3B
15.3C
15.3

| Item | Article no. | Description | Quantity |
|---|---|---|---|
| 1 | | DRIVE HELIX VE3604-IE2-ARC KIT | 1 |
| Note: no longer available/nicht mehrlieferbar/n'est plus disponible | | | |
| 1 | 4218537 | DRIVE HELIX VE3604-IE4-WEG KIT | 1 |
| Note: MOTOR BRAND WEG | | | |
| 2 | 4179586 | SCREW M16X60 (4 PIECES) | 1 |
| 3 | 4157721 | LANTERN HELIX 22/36 FF300 BB6312 KIT | 1 |
| 3.1 | | > LANTERN FF300 M+ GJL MACHINED+CATA 6312 | 1 |
| 3.2 | 4179589 | > EYELET CPL.FF300 HELIX(4 PIECES) | 1 |
| 3.3 | 4143969 | > COUPLING PROTECT HELIX FF KIT | 1 |
| 4 | 4143966 | COUPLING D.20XD.38 FF300 KIT | 1 |
| 5 | 4157725 | SCREW M10X40 (4 PIECES) | 1 |
| 6 | 4179592 | STUD BOLT M16X405 KIT | 1 |
| 6.1 | | > TIE BOLT M16-405x24x44-1.4057 | 1 |
| 6.2 | 4179562 | > NUT M16 8.8 ISO4032 (4 PIECES) | 1 |
| 6.3 | 4097852 | > WASHER-CS-16.4-32-2.8-NFE25-511-A2 | 1 |
| 7 | 4179565 | END SHIELD HELIX 8'' EPDM KIT | 1 |
| 7.1 | | > END SHIELD M+ GJL MACHINED+CATA | 1 |
| 7.2 | 4179564 | > O-RING D.42.52x2.62 EPDM VP. | 1 |
| 7.3 | 4179571 | > O-RING HOUSING PIPE HELIX22/36/52 VP. | 1 |
| 8 | 4186377 | FILING/PURGING PLUG 304 HELIX KIT | 1 |
| 8.1 | | > FILLING/VENTING-PLUG-MVI8/10"-304 | 1 |
| 8.2 | 4032291 | > O-RING 17x3 EPDM KTW/WRC | 1 |
| 9 | 4143973 | CARTRIDGE HELIX22-36-52 O/E KIT | 1 |
| 10 | 4179593 | HOUSING PIPE D.204X330 1.4307 KIT | 1 |
| 7.3 | 4179571 | > O-RING HOUSING PIPE HELIX22/36/52 VP. | 1 |
| 10.1 | | > HOUSING-PIPE Ø204-M+3604/5203-304 | 1 |
| 11 | 4181071 | CENTRALIZER HELIX 8'' M+36 1.4301 VP. | 1 |
| 12 | 4161186 | SHAFT EQUIPMENT HELIX V36 8'' KIT | 1 |
| 13 | | HYDRAULIC HELIX V 3604 | 1 |
| 14 | 2123751 | SHAFT D.22 LG.487,34 HELIX 1.4057 VP. | 1 |
| 15 | 4186381 | EQUIPED HOUSING HELIX OPTI DN65 GJL KIT | 1 |
| 15.1 | | > PUMP CASING MONO.M+8" DN65 PN16 DWA | 1 |
| 15.2 | | > HYD.SUP.M+8" MONO.HOUSING DN65 DWA | 1 |
| 15.3 | 4106048 | > DRAIN/PRIMING PLUG EPDM HELIX FIRST KIT | 1 |

| Item | Article no. | Description | Quantity |
|---|---|---|---|
| 15.3A | | >> DRAIN AND PRIMING PLUG-VMI10"-304 | 1 |
| 15.3B | 4032293 | >> O-RING-10x3-EPDM-KTW/WRC | 1 |
| 15.3C | 4233957 | >> O-RING ID.9 EPDM VP. | 1 |
| 7.3 | 4179571 | > O-RING HOUSING PIPE HELIX22/36/52 VP. | 1 |
| 13.1A | 4161200 | > NECK RING 1.STAGE HELIX V36/52 KIT | 1 |
| | | >> NECK-RING-M+36/52 | 1 |
| | | >> HYDRAULIC SUPPORT CAP M+36/52 304 | 1 |
| | | >> SCREW TCL M3X8 A4 POZIDRIV | 1 |

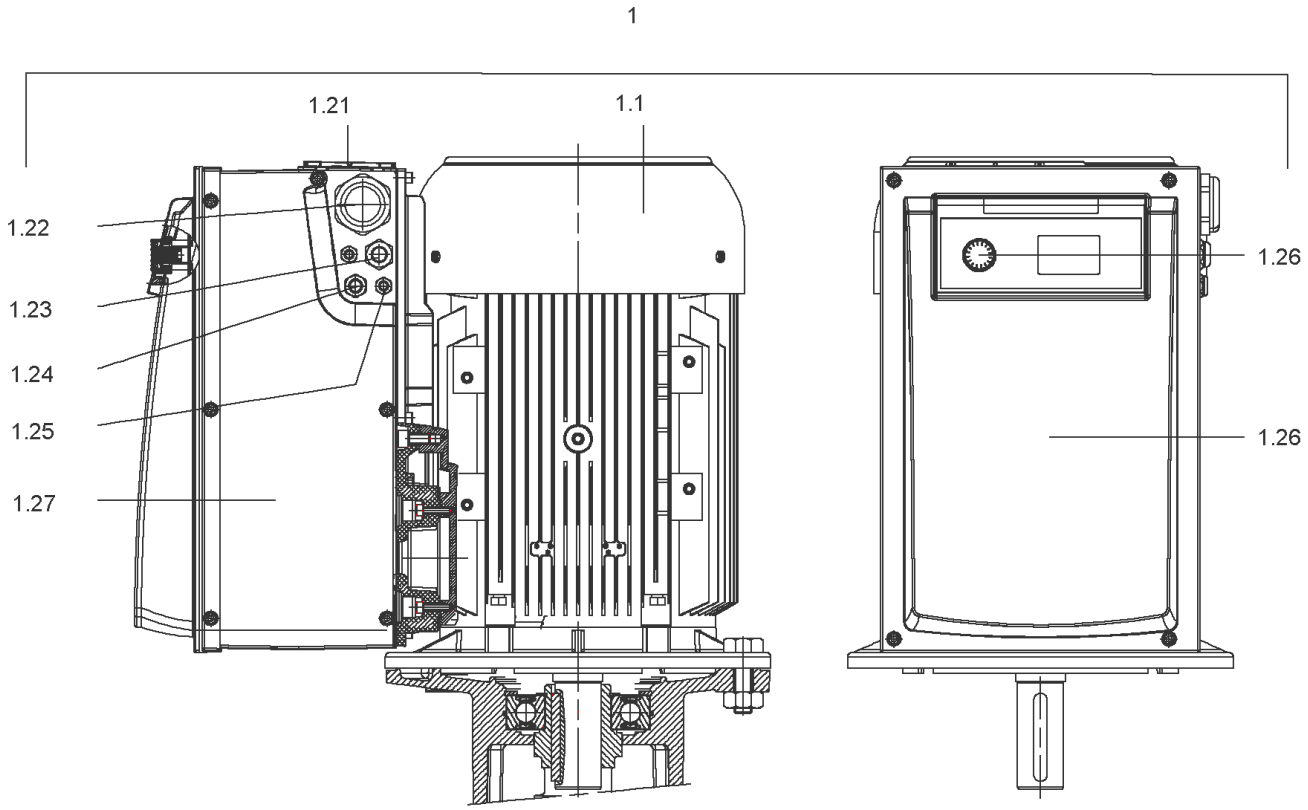
1
1.21
1.1
1.22
1.23
1.24
1.25
1.27
1.26
1.26

## DRIVE HELIX VE3604-IE2-ARC KIT

| Item | Article no. | Description | Quantity |
|---|---|---|---|
| 1.1 | | M11-2T540P55V1-160F300-N42-IE2 | 1 |
| | | SPARE PARTS MOTOR:ON REQUEST | 1 |
| 1.21 | 2132102 | FAN SMALL TL6/7 FF KIT | 1 |
| 1.25 | 2132097 | CABLE CONNECTION M12 TL6/7 FF VP. | 1 |
| 1.24 | 2132098 | CABLE CONNECTION M16 TL6/7 FF VP. | 1 |
| 1.23 | 2132099 | CABLE CONNECTION M20 TL6/7 FF VP. | 1 |
| 1.22 | 2132100 | CABLE CONNECTION SMALL M40 TL6/7 FF VP. | 1 |
| 1.27 | 2132104 | COVER SIDE TL6/7 FF CPL.VP. | 1 |
| 1.26 | 2132452 | MODULE COVER/BUTTON TL6/7 FF VP. | 1 |

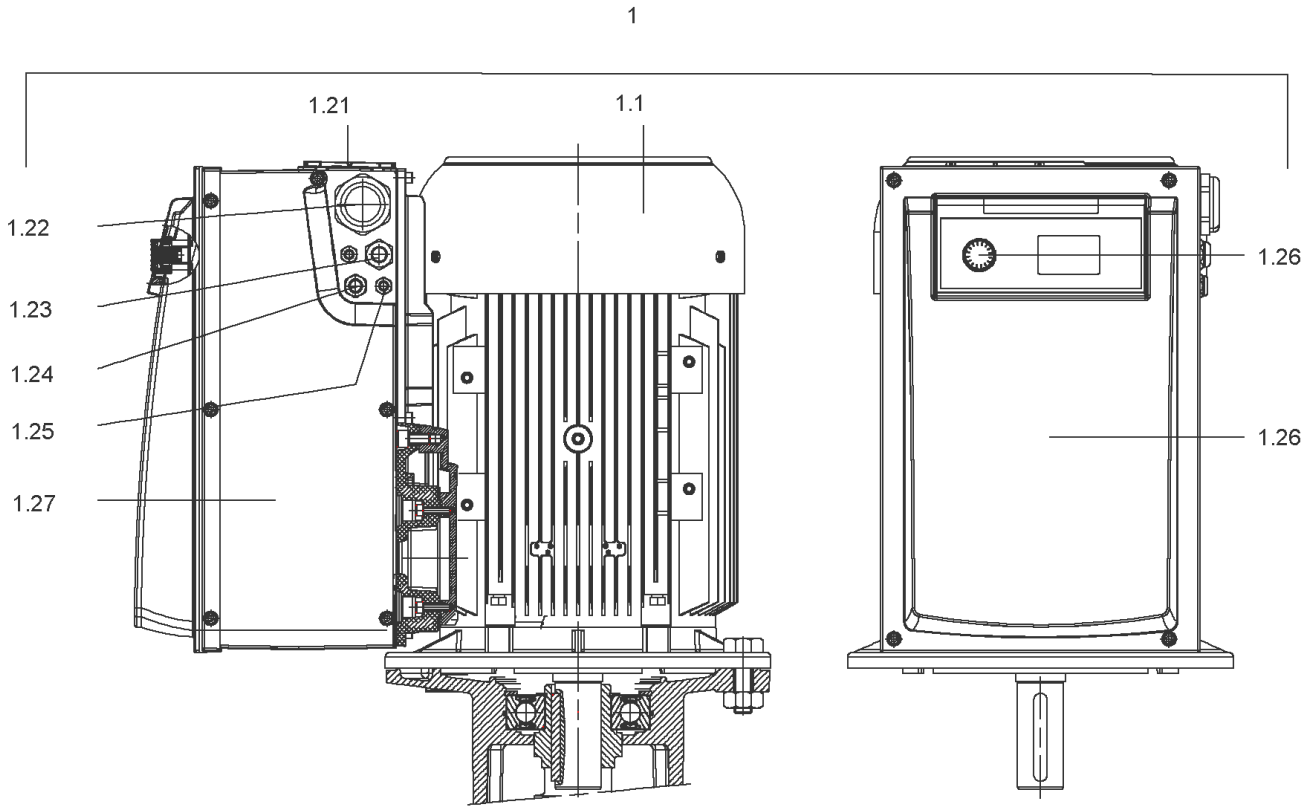
1
1.21
1.1
1.22
1.23
1.24
1.25
1.27
1.26
1.26

## DRIVE HELIX VE3604-IE4-WEG KIT (4218537)

| Item | Article no. | Description | Quantity |
|---|---|---|---|
| 1.1 | | M11-2T540P55V1-160F30-N42-ADAPT-IE4-WEG | 1 |
| | | SPARE PARTS MOTOR:ON REQUEST | 1 |
| 1.21 | 2132102 | FAN SMALL TL6/7 FF KIT | 1 |
| 1.25 | 2132097 | CABLE CONNECTION M12 TL6/7 FF VP. | 1 |
| 1.24 | 2132098 | CABLE CONNECTION M16 TL6/7 FF VP. | 1 |
| 1.23 | 2132099 | CABLE CONNECTION M20 TL6/7 FF VP. | 1 |
| 1.22 | 2132100 | CABLE CONNECTION SMALL M40 TL6/7 FF VP. | 1 |
| 1.27 | 2132104 | COVER SIDE TL6/7 FF CPL.VP. | 1 |
| 1.26 | 2132452 | MODULE COVER/BUTTON TL6/7 FF VP. | 1 |

## COUPLING D.20XD.38 FF300 KIT (4143966)

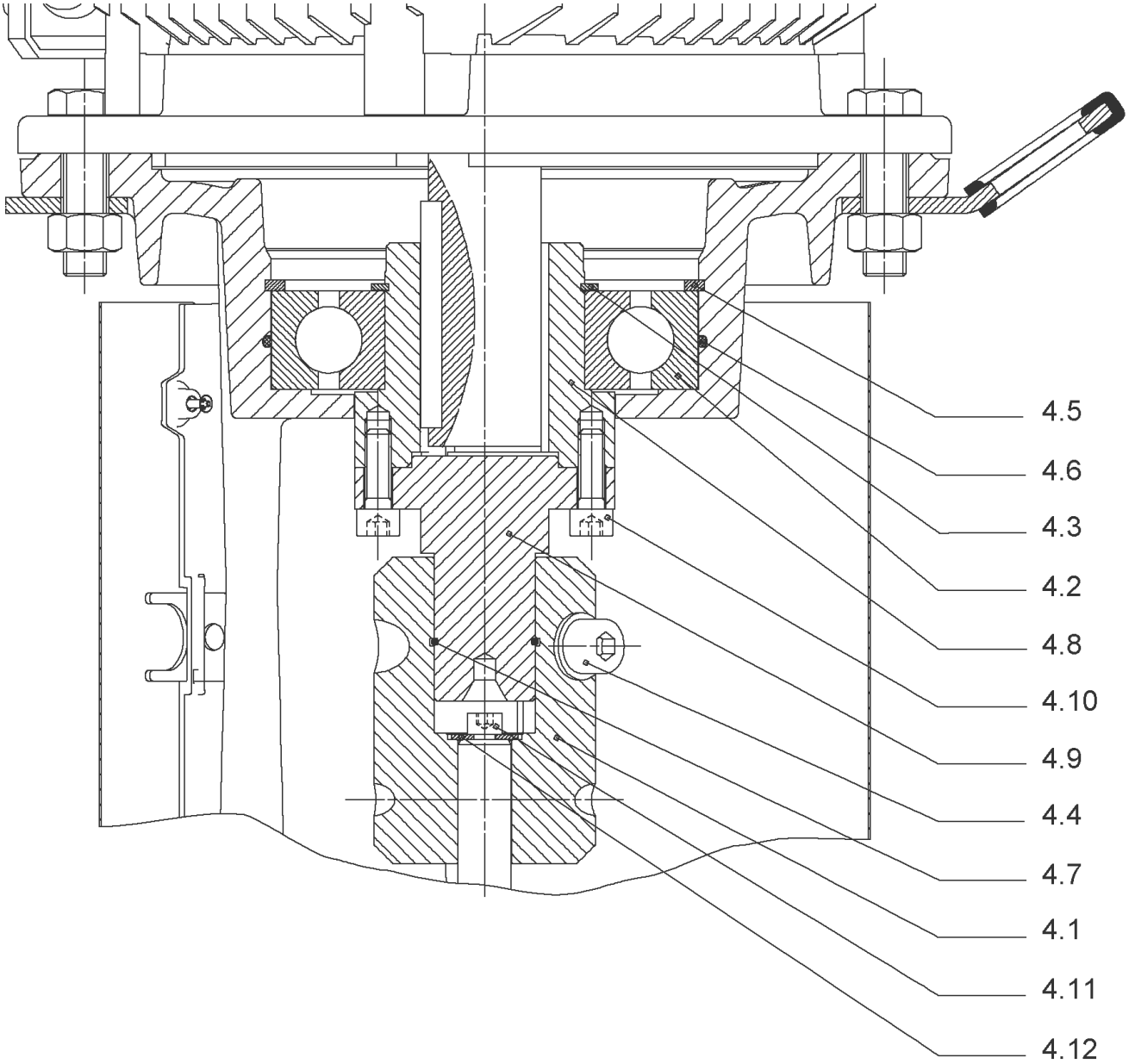

## COUPLING D.20XD.38 FF300 KIT (4143966)

| Item | Article no. | Description | Quantity |
|---|---|---|---|
| 4.1 | 4179590 | COUPLING 2 PARTS D.20XD.38XL115 VP. | 1 |
| 4.2 | 2123699 | BALL BEARING 6312/2Z-C4 (HT) VP. | 1 |
| 4.3 | 63428 | CIRCLIP-FOR-SHAFT-D60x2 | 1 |
| 4.4 | 2130991 | SCREW M12X30 ISO4762 8.8 ZN(4 PIECES) | 1 |
| 4.5 | 4032277 | CIRCLIP-HOLE-130x4 | 1 |
| 4.6 | 4006725 | O-RING ID.132,94x3,53 NBR70SR | 1 |
| 4.7 | 2130992 | RETAINING RING D.35xD.2,5 DIN7993 VP. | 1 |
| 4.8 | 4179591 | HUB D.42xD.60 VP. | 1 |
| 4.9 | 2130994 | SPACER D.38XD.55 VP. | 1 |
| 4.10 | 4094462 | SCREWS M10 ( 4 PIECES ) | 1 |
| 4.11 | 4233959 | SCREW M8x16 VP. | 1 |
| 4.12 | | SERRATED LOCK WASHER Ø8.2XØ25X35X2 | 1 |

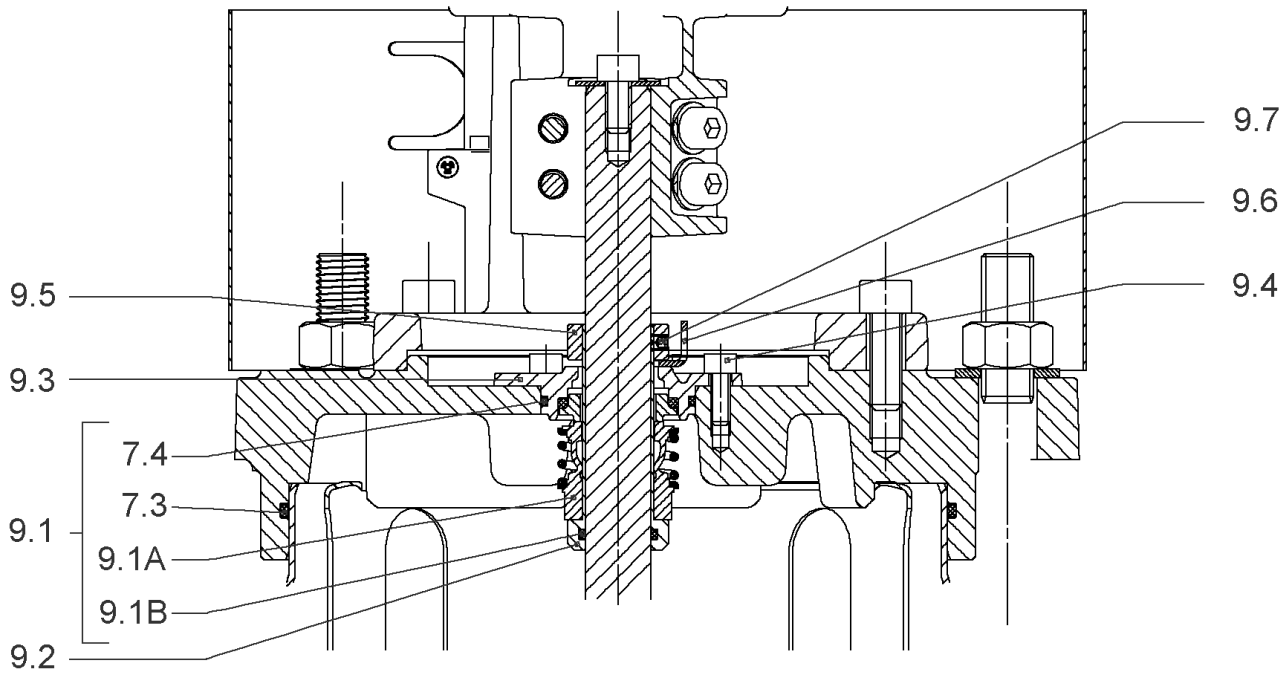
9.7
9.6
9.4
9.5
9.3
7.4
7.3
9.1
9.1A
9.1B
9.2

## CARTRIDGE HELIX22-36-52 O/E KIT (4143973)

| Item | Article no. | Description | Quantity |
|---|---|---|---|
| 9.1 | 4143974 | SEAL-KIT-HELIX22-36-52 O/E | 1 |
| 7.3 | 4179571 | > O-RING HOUSING PIPE HELIX22/36/52 VP. | 1 |
| 7.4 | 4179572 | > O-RING ID.42.52X2.62 EPDM VP. | 1 |
| 9.1A | 4179573 | > M.SEAL.HELIX22-36-52 O/E VP. | 1 |
| 9.1B | 4179574 | > O-RING ID.20x2.65 EPDM VP. | 1 |
| 9.2 | 4179566 | SHAFT SLEEVE D.20/20X60 1.4404 VP. | 1 |
| 9.3 | 4179567 | RING HOLDER Ø22 1.4301 VP. | 1 |
| 9.4 | 4176520 | SCREW CH M5x5 A4-70 ( 3PIECES ) | 1 |
| 9.5 | 4179568 | DRIVE RING D.31/22.1x11 MACH.VP. | 1 |
| 9.6 | 4179569 | TOOL M.S.CART.HELIX 8'' VP. | 1 |
| 9.7 | 4179570 | SCREW M6X16 ISO4762 8.8 GEOMET(4 PIECES) | 1 |

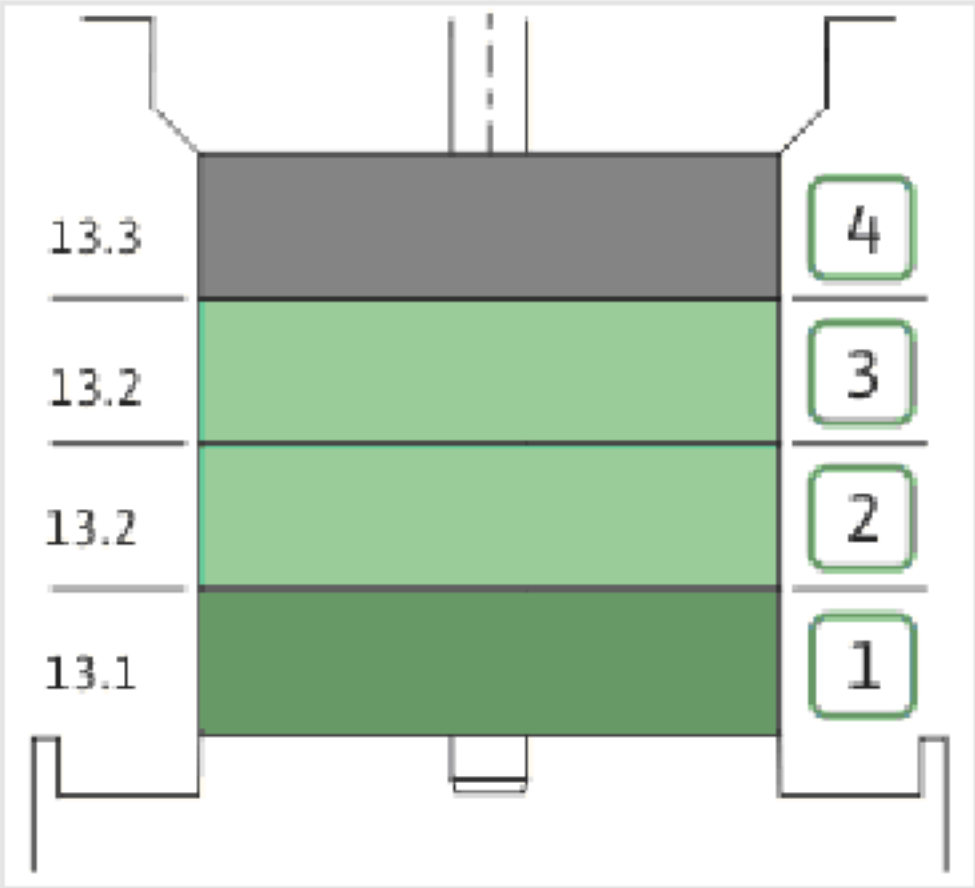
13.3
13.2
13.2
13.1
4
3
2
1

| Item | Article no. | Description | Quantity |
|---|---|---|---|
| 13.1 | 4161192 | INTERMEDIATE STAGE HELIX V36 1.4301 KIT | 1 |
| | | > SLEEVE-SPACER-D22XL16,66-316L | 1 |
| | | > MACH.BEARING-DIFFUSER+NR-M+36-304 | 1 |
| | | > SHAFT-SLEEVE-D26xD22x16-CW | 1 |
| | | > IMPELLER-H1-M+36-304 | 1 |
| 13.1A | 4161200 | > NECK RING 1.STAGE HELIX V36/52 KIT | 1 |
| | | >> NECK-RING-M+36/52 | 1 |
| | | >> HYDRAULIC SUPPORT CAP M+36/52 304 | 1 |
| | | >> SCREW TCL M3X8 A4 POZIDRIV | 1 |
| 13.2 | 4161193 | INTERMEDIATE STAGE HELIX V36 1.4301 KIT | 1 |
| | | > MACH.STD-DIFFUSER+NR-M+36-304 | 1 |
| | | > IMPELLER-H4-M+36-304 | 1 |
| 13.3 | 4161194 | UPPER STAGE HELIX 36 1.4301 KIT | 1 |
| | | > STOP COLLAR OF IMPELLER L20-Ø22-316L | 1 |
| | | > IMPELLER-H4-M+36-304 | 1 |
| | | > MACH.-RIGID-STD-DISCH.-CHAMBER-M+36-304 | 1 |

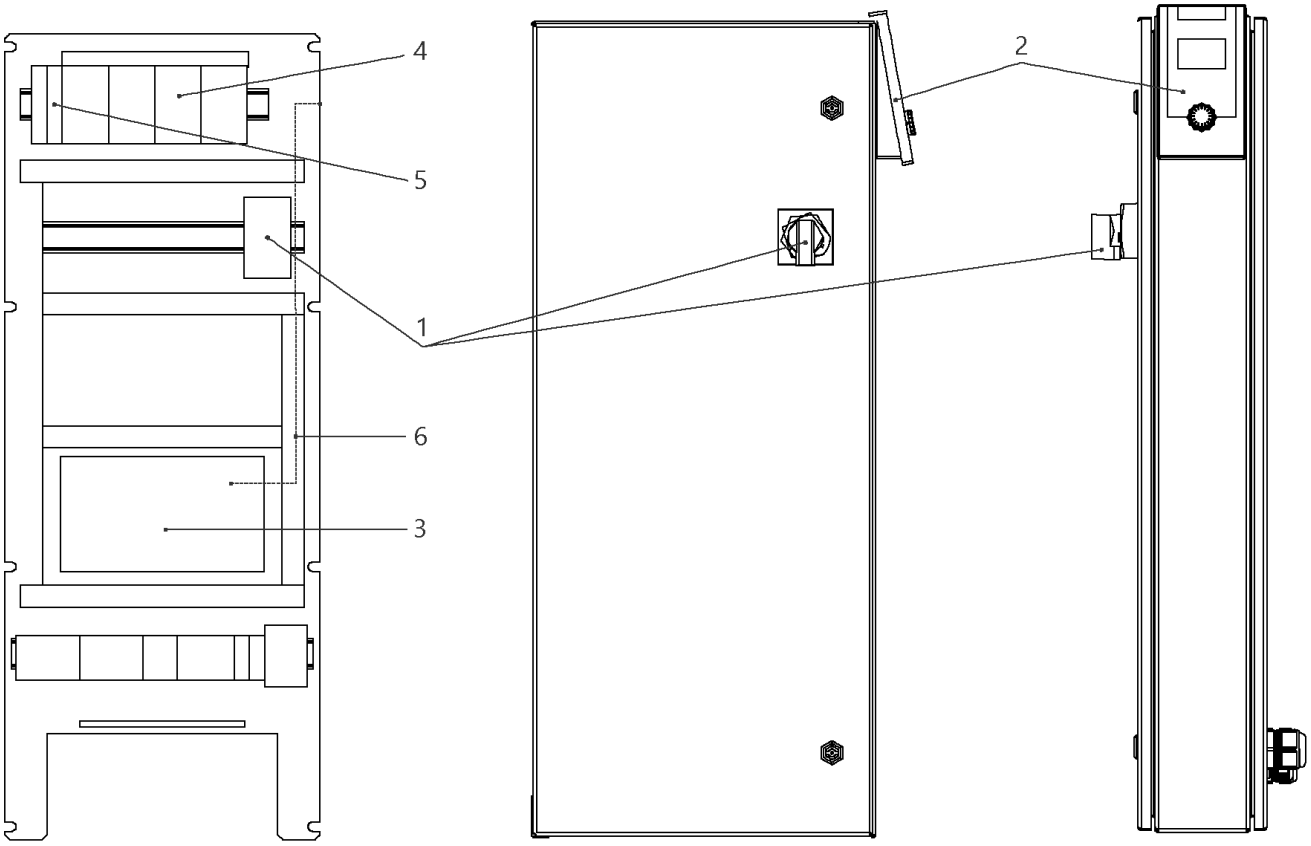
4
5
1
6
3
2

## W-CTRL-SCE-B-2x24A-T34-FM-ND2-AVC-PKG

| Item | Article no. | Description | Quantity |
|---|---|---|---|
| 1 | 2104473 | MAIN SWITCH OT63F3 L105 KIT | 1 |
| 2 | 4184784 | CONTROL PANEL HMI SC KIT | 1 |
| 2 | 4185259 | ASSEMBLY DISPLAY SC PKG VP. | 1 |
| Note: DISPLAY ALONE / PLATINE SEULE | | | |
| 3 | 4185257 | ASSEMBLY CPU SCe Booster VP. | 1 |
| 4 | 2051219 | AUTOM.CIRCUIT BREAKER S203 B32 FOR 15kW | 1 |
| 5 | 2046288 | CIRCUIT BREAKER S201 B16 | 1 |
| 6 | 4194956 | PATCH CABLE RJ45 CAT6 1,0M BLUE SC-PANEL | 1 |

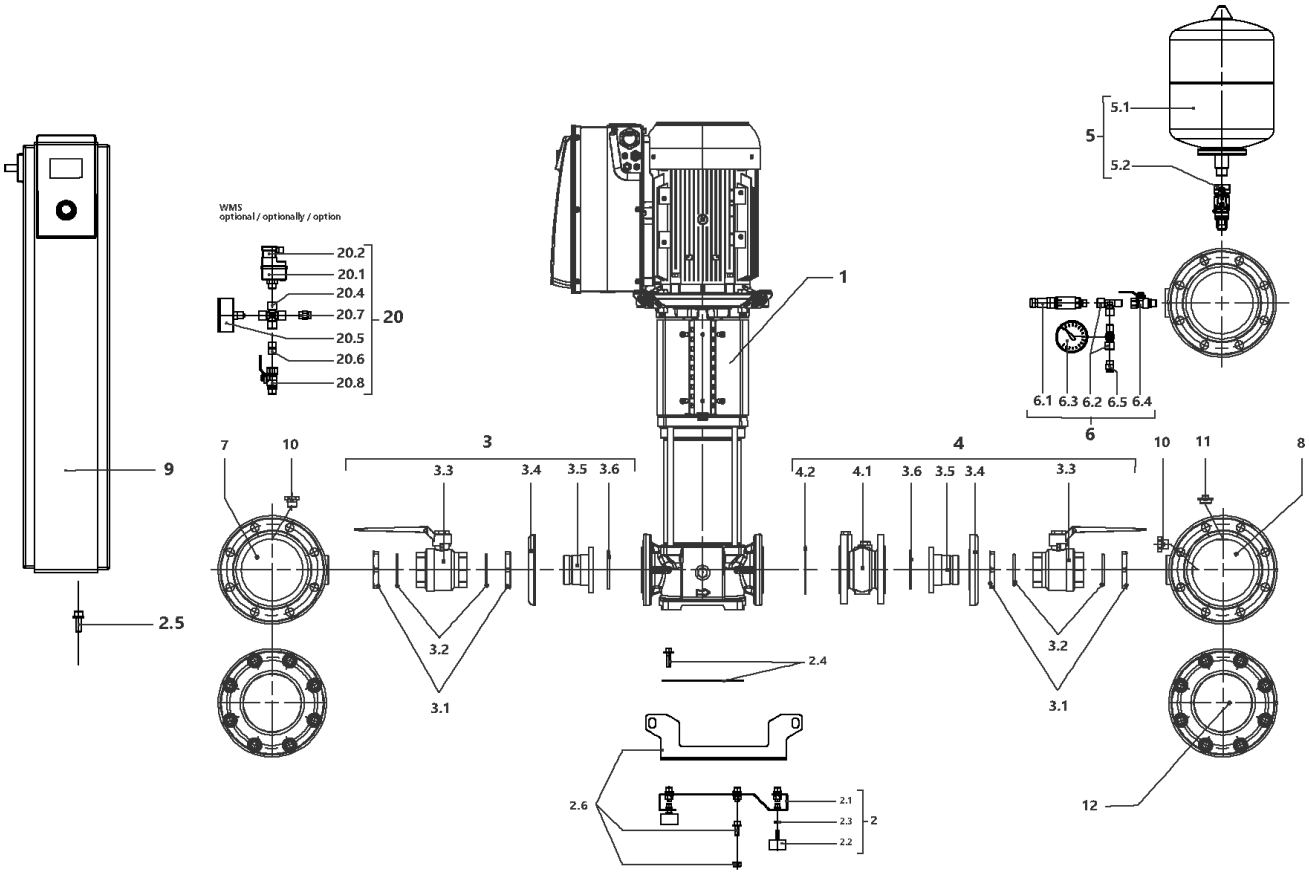
WMS
optional / optionally / option
20.2
20.1
20.4
20.7
20.5
20.6
20.8
20
1
5.1
5
5.2
6.1 6.3 6.2 6.5 6.4
6
9
7
10
3
3.3
3.4
3.5 3.6
4.2
4.1
3.6 3.5 3.4
4
10
11
8
2.5
3.2
3.1
2.4
2.6
2.1
2.3
2.2
2
12

## SiBoost Smart 2HELIX VE3605 (2540916)

| Item | Article no. | Description | Quantity |
|---|---|---|---|
| 1 | | HELIX VE3605-4/16/E/KS/2G | 1 |
| 2 | 4204893 | BASE PLATE DE2 1250x420 M10 KIT | 1 |
| 2.1 | | > BASE_FR_2x22-52V500L400BOX150-250 | 1 |
| 2.2 | 2027881 | > VIBRATION DAMPER M.10X20 D.70 | 1 |
| 2.3 | 2028281 | > NUT M10 DIN936 (ISO4035) 17H VZ | 1 |
| 2.4 | 4204891 | > HOLDER PUMP Siboost Smart V36/52 KIT | 1 |
| 2.5 | 4197084 | > HOLDER SWITCHBOX WILO Smart Control KIT | 1 |
| 2.6 | 4203979 | > LIFTING Siboost HELIX 22/36 KIT | 1 |
| 3 | 4204892 | SUCTION SIDE Siboost Helix 36 KIT | 1 |
| 3.1 | 2027123 | > NUT G2½ X15 MS | 1 |
| 3.2 | 2025969 | > O-RING ID.72,39x5,33 EPDM 70SHORE | 1 |
| 3.2 | | > VALVE-BS-2"1/2-F/F-PS25-BRASS-NICK-ACS | 1 |
| 3.4 | 2032973 | > LAPPED FLANGE DN65 1.4301 DIN2642P | 1 |
| 3.5 | | > UNION INSERT DN65-G21/2" FLANGE AISI304 | 1 |
| 3.6 | 2028296 | > O-RING ID.91,44x5,33 EPDM 70SHORE | 1 |
| 4 | 4204894 | DELIVERY SIDE Siboost Helix 36 KIT | 1 |
| 3.1 | 2027123 | > NUT G2½ X15 MS | 1 |
| 3.2 | 2025969 | > O-RING ID.72,39x5,33 EPDM 70SHORE | 1 |
| 3.3 | | > VALVE-BS-2"1/2-F/F-PS25-BRASS-NICK-ACS | 1 |
| Note: accessories see price list/Zubehör siehe | | | |
| 3.4 | 2032973 | > LAPPED FLANGE DN65 1.4301 DIN2642P | 1 |
| 3.5 | | > UNION INSERT DN65-G21/2" FLANGE AISI304 | 1 |
| Note: accessories see price list/Zubehör siehe | | | |
| 3.6 | 2028296 | > O-RING ID.91,44x5,33 EPDM 70SHORE | 1 |
| 4.1 | 2127586 | > NON RETURN VALVE DN65 PN16 TYP402B VP. | 1 |
| 4.2 | 2119912 | > GASKET D.77/127X2 DN65 C4430 VP. | 1 |
| 5 | 4203983 | DIAPHREM TANK 8L/PN16 DIN4807/T5 KIT | 1 |
| 5.1 | 2045914 | > DIAPHREM TANK 8L TYP-DD 16BAR | 1 |
| 5.2 | 4189350 | > FLOW FITTING G3/4 FOR DIAPHRAG VESSEL VP | 1 |
| 6 | 4197076 | PRESSURE SENSOR/ GAUGE 0-16BAR KIT | 1 |
| 6.1 | 2085909 | > PRESS.SENSOR 1/4" 0-16BAR 4-20MA VP. | 1 |
| 6.2 | 4197077 | > T-PIECE 1/4" VP. | 1 |
| 6.3 | 2028692 | > PRESSURE GAUGE NG63-PN16-G1/4 | 1 |
| 6.4 | 2028291 | > BALL TAP R1/4" PN42 GIACOMINI R254DL | 1 |

| Item | Article no. | Description | Quantity |
|---|---|---|---|
| 6.5 | 2028691 | > BLOWGUN 1/4" MS 30BAR VP. | 1 |
| 7 | 4204905 | PIPE DE2 DN100-2x21/2"+1x1/4x1000 VP. | 1 |
| 8 | 4204906 | PIPE DE2 DN100-2x21/2"+1x1/4+1x3/4x1000 | 1 |
| 9 | | W-CTRL-SCE-B-2x32A-T34-FM-ND2-AVC-PKG | 1 |
| 10 | 4197079 | PLUG G1/4"x10 AISI304 KIT | 1 |
| 11 | 2032654 | PLUG R3/4" MS VIEGA 1751 | 1 |
| 12 | 4203989 | BLIND-FLANGE DN100 PN16 -1.4301 KIT | 1 |
| | 2094573 | > NUT M16 DIN934 A2 1.4301 VP. | 1 |
| | 2107590 | > SCREW M16x70 DIN933 A2 (8 PIECES) | 1 |
| | 2094572 | > WASHER A17 DIN125 A2 1.4301 VP. | 1 |
| | | > FULL FLANGE ST.DN100 PN16 EN1092-1/05 A2 | 1 |
| | | > FLANGE COVER DN100 DIN 3443 FORM A | 1 |
| | 2106342 | > FLAT GASKET D.120/162X2 DN100 C4430 VP. | 1 |
| 20 | | ASSEMBLY WMS. DE-EB. +VP | 1 |
| 20.1 | 2028652 | > PRESSURE SWITCH PS3-ASR 1/(1,3) VP. | 1 |
| 20.2 | 2130983 | > PLUG PS3-415 WITH KABEL 1,5M 2NO VP. | 1 |
| 20.4 | 2028290 | > CROSSPIECE R1/4" MS-NICKEL | 1 |
| 20.5 | 2028687 | > PRESSURE GAUGE NG63 R1/4" HI.0-6BAR | 1 |
| 20.6 | 2054268 | > DUAL NIPPLE G1/4" x G1/4" MS VP. | 1 |
| 20.7 | 2028691 | > BLOWGUN 1/4" MS 30BAR VP. | 1 |
| 20.8 | 2028291 | > BALL TAP R1/4" PN42 GIACOMINI R254DL | 1 |

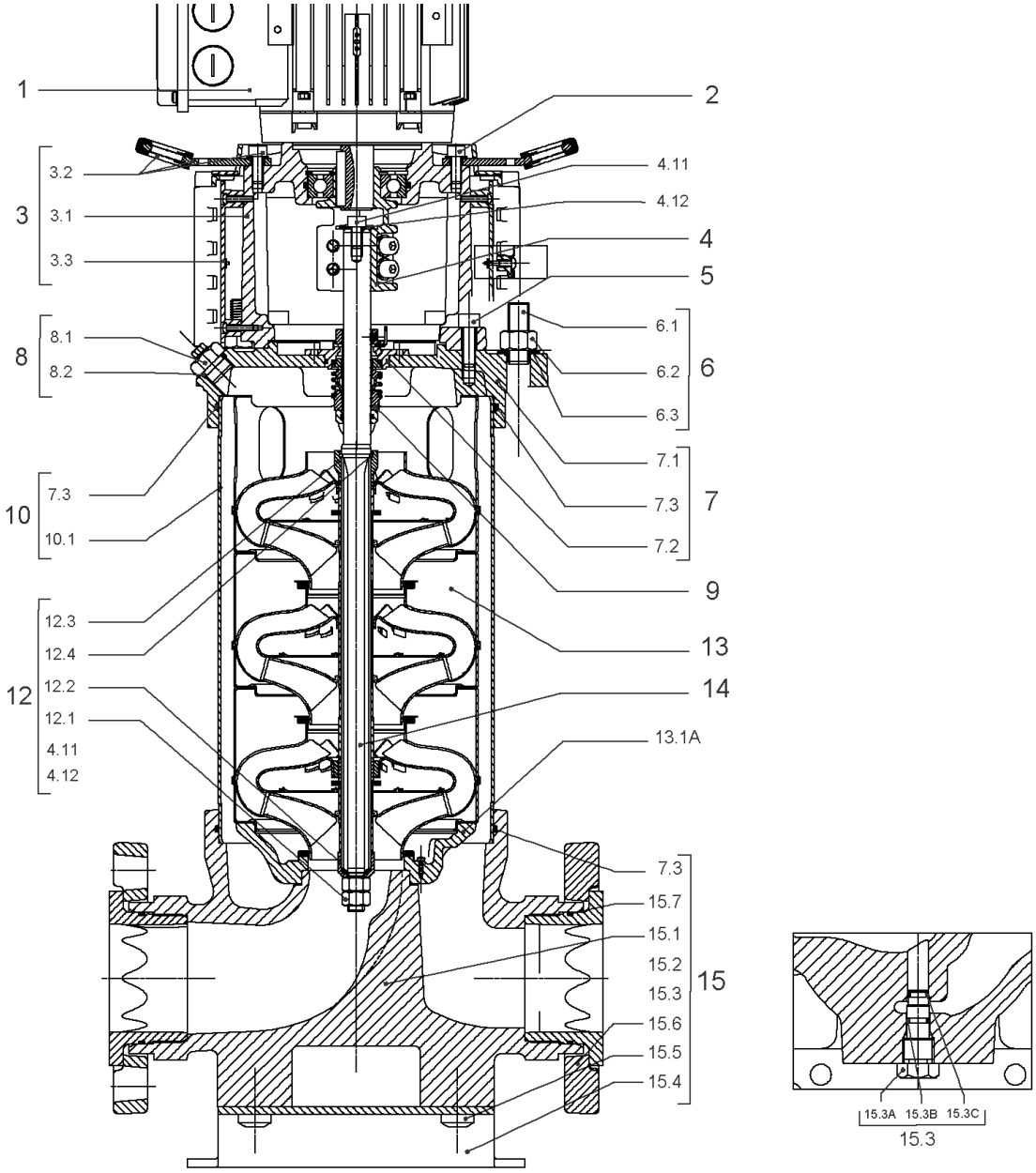
1
2
3
3.2
3.1
3.3
4.11
4.12
4
5
8
8.1
8.2
6.1
6.2
6.3
6
7.1
7.3
7.2
7
10
7.3
10.1
9
12.3
12.4
12.2
12.1
4.11
4.12
12
13
14
13.1A
7.3
15.7
15.1
15.2
15.3
15.6
15.5
15.4
15
15.3A
15.3B
15.3C
15.3

| Item | Article no. | Description | Quantity |
|---|---|---|---|
| 1 | | DRIVE HELIX VE3605-IE2-ARC KIT | 1 |
| Note: no longer available/nicht mehrlieferbar/n'est plus disponible | | | |
| 1 | 4218532 | DRIVE HELIX VE3605-IE4-WEG KIT | 1 |
| Note: MOTOR BRAND WEG | | | |
| 2 | 4179586 | SCREW M16X60 (4 PIECES) | 1 |
| 3 | 4157721 | LANTERN HELIX 22/36 FF300 BB6312 KIT | 1 |
| 3.1 | | > LANTERN FF300 M+ GJL MACHINED+CATA 6312 | 1 |
| 3.2 | 4179589 | > EYELET CPL.FF300 HELIX(4 PIECES) | 1 |
| 3.3 | 4143969 | > COUPLING PROTECT HELIX FF KIT | 1 |
| 4 | 4143966 | COUPLING D.20XD.38 FF300 KIT | 1 |
| 5 | 4157725 | SCREW M10X40 (4 PIECES) | 1 |
| 6 | 4181083 | STUD BOLT M16X466 KIT | 1 |
| 6.1 | | > TIE BOLT M16-466x24x44-1.4057 | 1 |
| 6.2 | 4179562 | > NUT M16 8.8 ISO4032 (4 PIECES) | 1 |
| 6.3 | 4097852 | > WASHER-CS-16.4-32-2.8-NFE25-511-A2 | 1 |
| 7 | 4179565 | END SHIELD HELIX 8'' EPDM KIT | 1 |
| 7.1 | | > END SHIELD M+ GJL MACHINED+CATA | 1 |
| 7.2 | 4179564 | > O-RING D.42.52x2.62 EPDM VP. | 1 |
| 7.3 | 4179571 | > O-RING HOUSING PIPE HELIX22/36/52 VP. | 1 |
| 8 | 4186377 | FILING/PURGING PLUG 304 HELIX KIT | 1 |
| 8.1 | | > FILLING/VENTING-PLUG-MVI8/10"-304 | 1 |
| 8.2 | 4032291 | > O-RING 17x3 EPDM KTW/WRC | 1 |
| 9 | 4143973 | CARTRIDGE HELIX22-36-52 O/E KIT | 1 |
| 10 | 2131084 | HOUSING PIPE D.204x397,44 1.4307 KIT | 1 |
| 7.3 | 4179571 | > O-RING HOUSING PIPE HELIX22/36/52 VP. | 1 |
| 10.1 | | > HOUSING-PIPE Ø204-M+3605-304 | 1 |
| 11 | 4181071 | CENTRALIZER HELIX 8'' M+36 1.4301 VP. | 1 |
| 12 | 4161186 | SHAFT EQUIPMENT HELIX V36 8'' KIT | 1 |
| 13 | | HYDRAULIC HELIX V 3605 | 1 |
| 14 | 4179578 | SHAFT D.22X554 1.4057 VP. | 1 |
| 15 | 4186381 | EQUIPED HOUSING HELIX OPTI DN65 GJL KIT | 1 |
| 15.1 | | > PUMP CASING MONO.M+8" DN65 PN16 DWA | 1 |
| 15.2 | | > HYD.SUP.M+8" MONO.HOUSING DN65 DWA | 1 |
| 15.3 | 4106048 | > DRAIN/PRIMING PLUG EPDM HELIX FIRST KIT | 1 |

| Item | Article no. | Description | Quantity |
|---|---|---|---|
| 15.3A | | >> DRAIN AND PRIMING PLUG-VMI10"-304 | 1 |
| 15.3B | 4032293 | >> O-RING-10x3-EPDM-KTW/WRC | 1 |
| 15.3C | 4233957 | >> O-RING ID.9 EPDM VP. | 1 |
| 7.3 | 4179571 | > O-RING HOUSING PIPE HELIX22/36/52 VP. | 1 |
| 13.1A | 4161200 | > NECK RING 1.STAGE HELIX V36/52 KIT | 1 |
| | | >> NECK-RING-M+36/52 | 1 |
| | | >> HYDRAULIC SUPPORT CAP M+36/52 304 | 1 |
| | | >> SCREW TCL M3X8 A4 POZIDRIV | 1 |

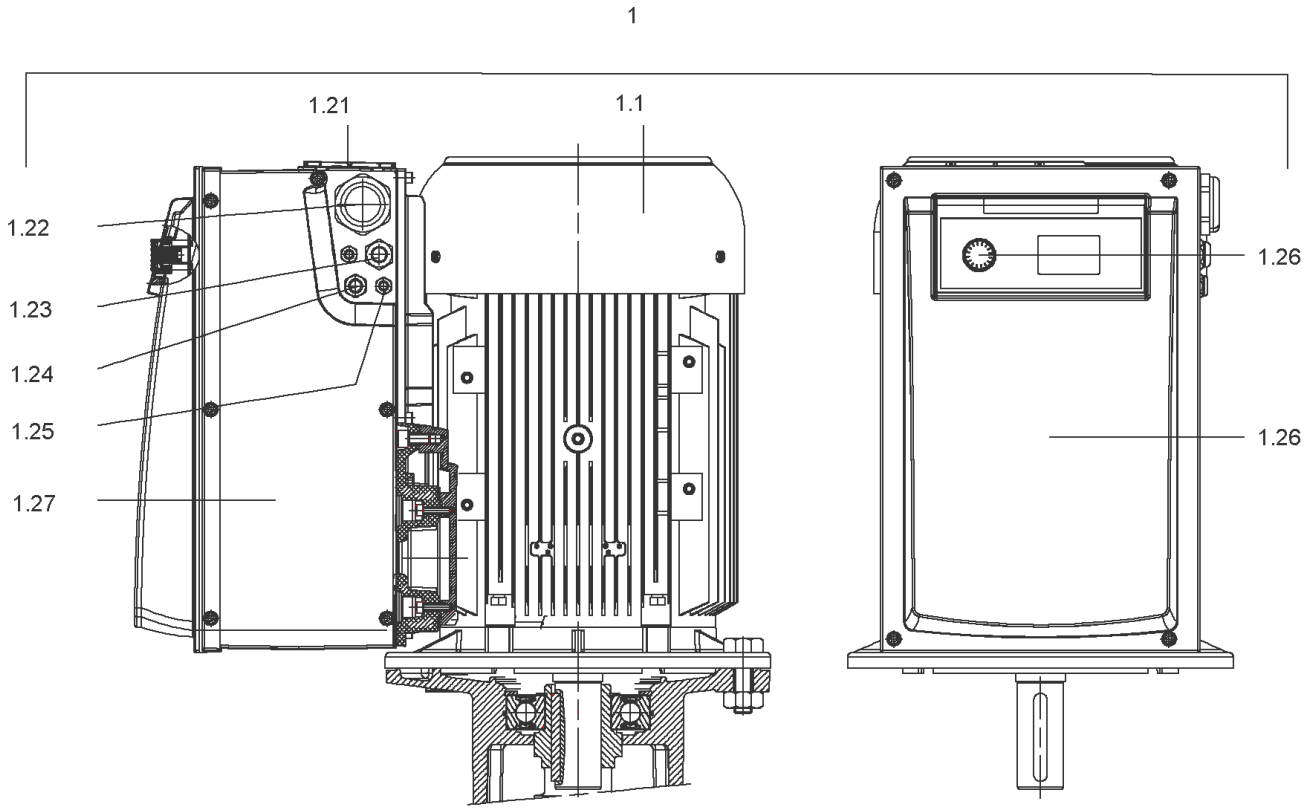
1
1.21
1.1
1.22
1.23
1.24
1.25
1.27
1.26
1.26

## DRIVE HELIX VE3605-IE2-ARC KIT

| Item | Article no. | Description | Quantity |
|---|---|---|---|
| 1.1 | | M15-2T540P55V1-160F300-N42-IE2 | 1 |
| | | SPARE PARTS MOTOR:ON REQUEST | 1 |
| 1.21 | 2132102 | FAN SMALL TL6/7 FF KIT | 1 |
| 1.25 | 2132097 | CABLE CONNECTION M12 TL6/7 FF VP. | 1 |
| 1.24 | 2132098 | CABLE CONNECTION M16 TL6/7 FF VP. | 1 |
| 1.23 | 2132099 | CABLE CONNECTION M20 TL6/7 FF VP. | 1 |
| 1.22 | 2132100 | CABLE CONNECTION SMALL M40 TL6/7 FF VP. | 1 |
| 1.27 | 2132104 | COVER SIDE TL6/7 FF CPL.VP. | 1 |
| 1.26 | 2132452 | MODULE COVER/BUTTON TL6/7 FF VP. | 1 |

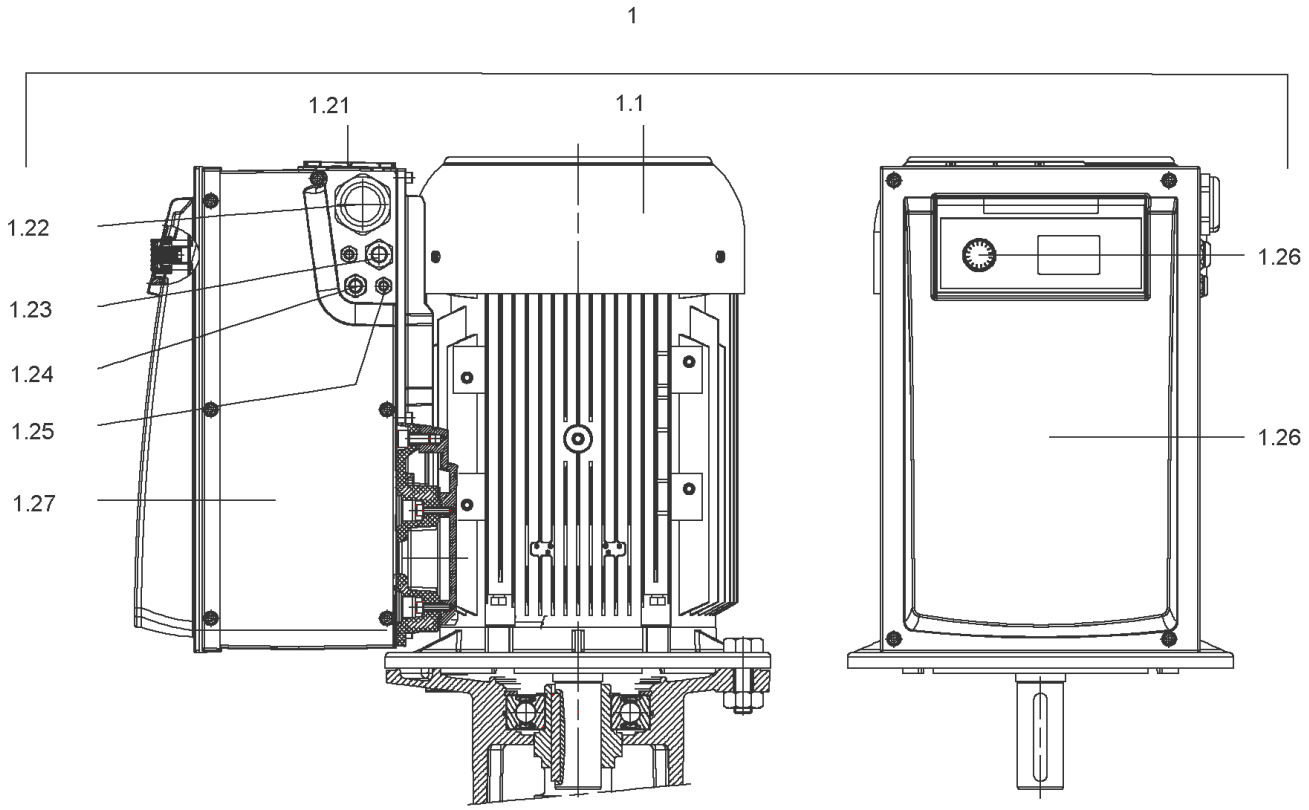
1
1.21
1.1
1.22
1.23
1.24
1.25
1.27
1.26
1.26

## DRIVE HELIX VE3605-IE4-WEG KIT (4218532)

| Item | Article no. | Description | Quantity |
|---|---|---|---|
| 1.1 | | M15-2T540P55V1-160F30-N42-ADAPT-IE4-WEG | 1 |
| | | SPARE PARTS MOTOR:ON REQUEST | 1 |
| 1.21 | 2132102 | FAN SMALL TL6/7 FF KIT | 1 |
| 1.25 | 2132097 | CABLE CONNECTION M12 TL6/7 FF VP. | 1 |
| 1.24 | 2132098 | CABLE CONNECTION M16 TL6/7 FF VP. | 1 |
| 1.23 | 2132099 | CABLE CONNECTION M20 TL6/7 FF VP. | 1 |
| 1.22 | 2132100 | CABLE CONNECTION SMALL M40 TL6/7 FF VP. | 1 |
| 1.27 | 2132104 | COVER SIDE TL6/7 FF CPL.VP. | 1 |
| 1.26 | 2132452 | MODULE COVER/BUTTON TL6/7 FF VP. | 1 |

## COUPLING D.20XD.38 FF300 KIT (4143966)

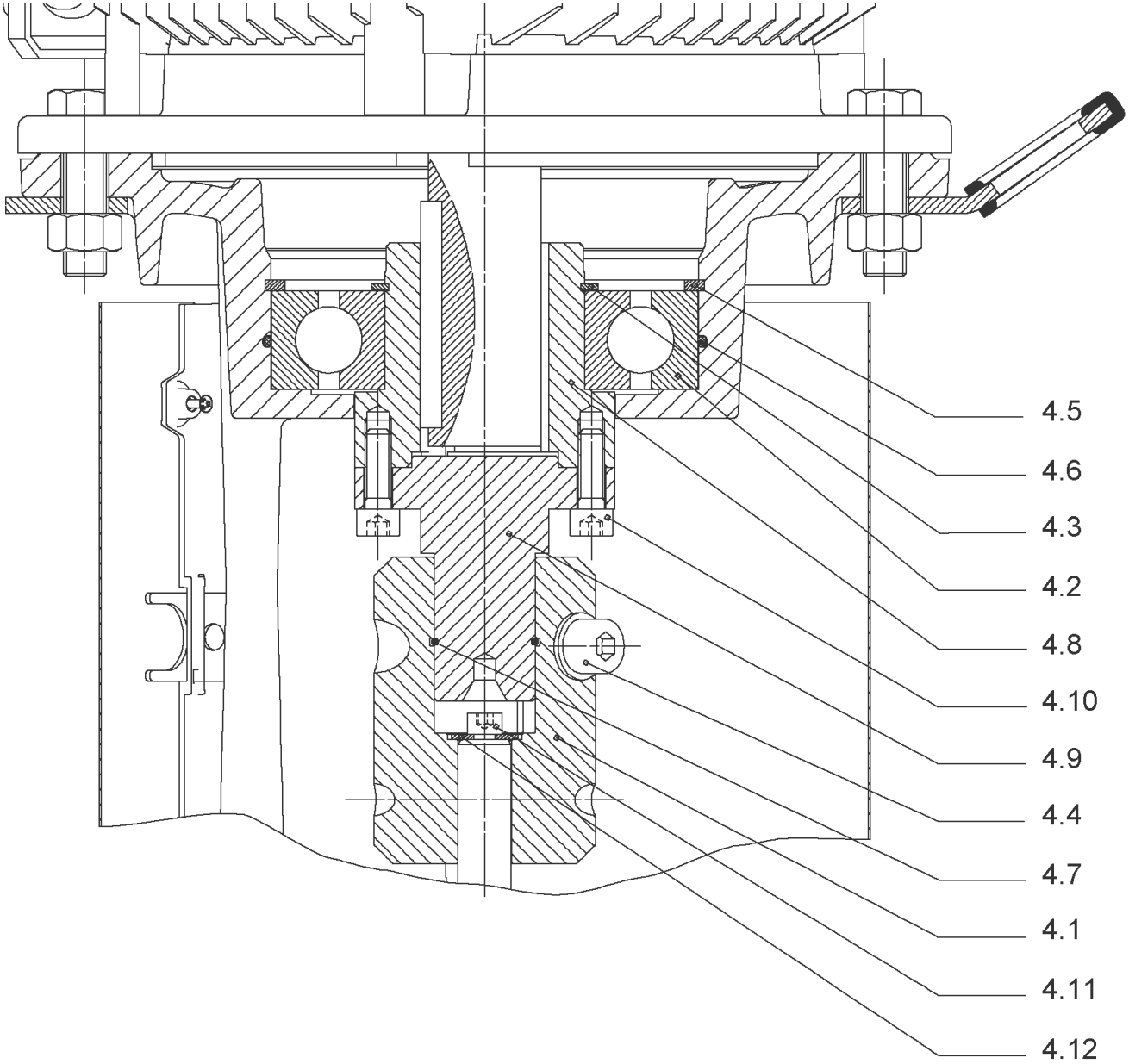

## COUPLING D.20XD.38 FF300 KIT (4143966)

| Item | Article no. | Description | Quantity |
|---|---|---|---|
| 4.1 | 4179590 | COUPLING 2 PARTS D.20XD.38XL115 VP. | 1 |
| 4.2 | 2123699 | BALL BEARING 6312/2Z-C4 (HT) VP. | 1 |
| 4.3 | 63428 | CIRCLIP-FOR-SHAFT-D60x2 | 1 |
| 4.4 | 2130991 | SCREW M12X30 ISO4762 8.8 ZN(4 PIECES) | 1 |
| 4.5 | 4032277 | CIRCLIP-HOLE-130x4 | 1 |
| 4.6 | 4006725 | O-RING ID.132,94x3,53 NBR70SR | 1 |
| 4.7 | 2130992 | RETAINING RING D.35xD.2,5 DIN7993 VP. | 1 |
| 4.8 | 4179591 | HUB D.42xD.60 VP. | 1 |
| 4.9 | 2130994 | SPACER D.38XD.55 VP. | 1 |
| 4.10 | 4094462 | SCREWS M10 ( 4 PIECES ) | 1 |
| 4.11 | 4233959 | SCREW M8x16 VP. | 1 |
| 4.12 | | SERRATED LOCK WASHER Ø8.2XØ25X35X2 | 1 |

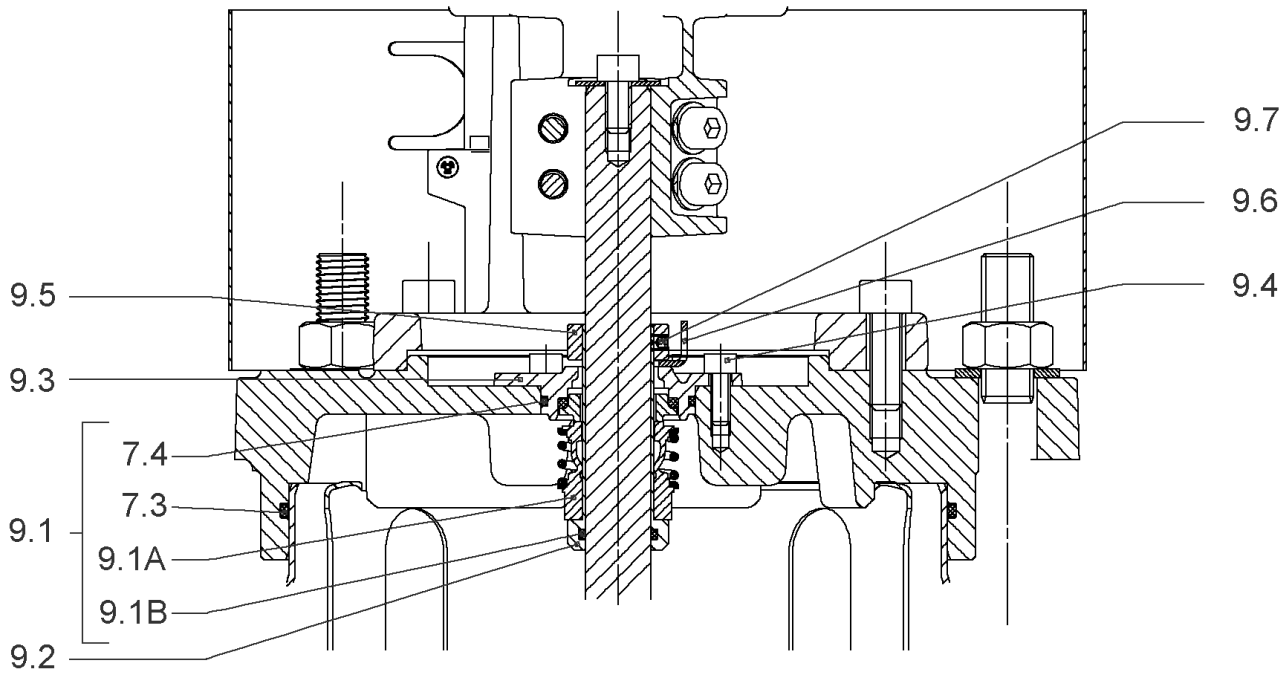
9.7
9.6
9.4
9.5
9.3
7.4
7.3
9.1
9.1A
9.1B
9.2

## CARTRIDGE HELIX22-36-52 O/E KIT (4143973)

| Item | Article no. | Description | Quantity |
|---|---|---|---|
| 9.1 | 4143974 | SEAL-KIT-HELIX22-36-52 O/E | 1 |
| 7.3 | 4179571 | > O-RING HOUSING PIPE HELIX22/36/52 VP. | 1 |
| 7.4 | 4179572 | > O-RING ID.42.52X2.62 EPDM VP. | 1 |
| 9.1A | 4179573 | > M.SEAL.HELIX22-36-52 O/E VP. | 1 |
| 9.1B | 4179574 | > O-RING ID.20x2.65 EPDM VP. | 1 |
| 9.2 | 4179566 | SHAFT SLEEVE D.20/20X60 1.4404 VP. | 1 |
| 9.3 | 4179567 | RING HOLDER Ø22 1.4301 VP. | 1 |
| 9.4 | 4176520 | SCREW CH M5x5 A4-70 ( 3PIECES ) | 1 |
| 9.5 | 4179568 | DRIVE RING D.31/22.1x11 MACH.VP. | 1 |
| 9.6 | 4179569 | TOOL M.S.CART.HELIX 8'' VP. | 1 |
| 9.7 | 4179570 | SCREW M6X16 ISO4762 8.8 GEOMET(4 PIECES) | 1 |

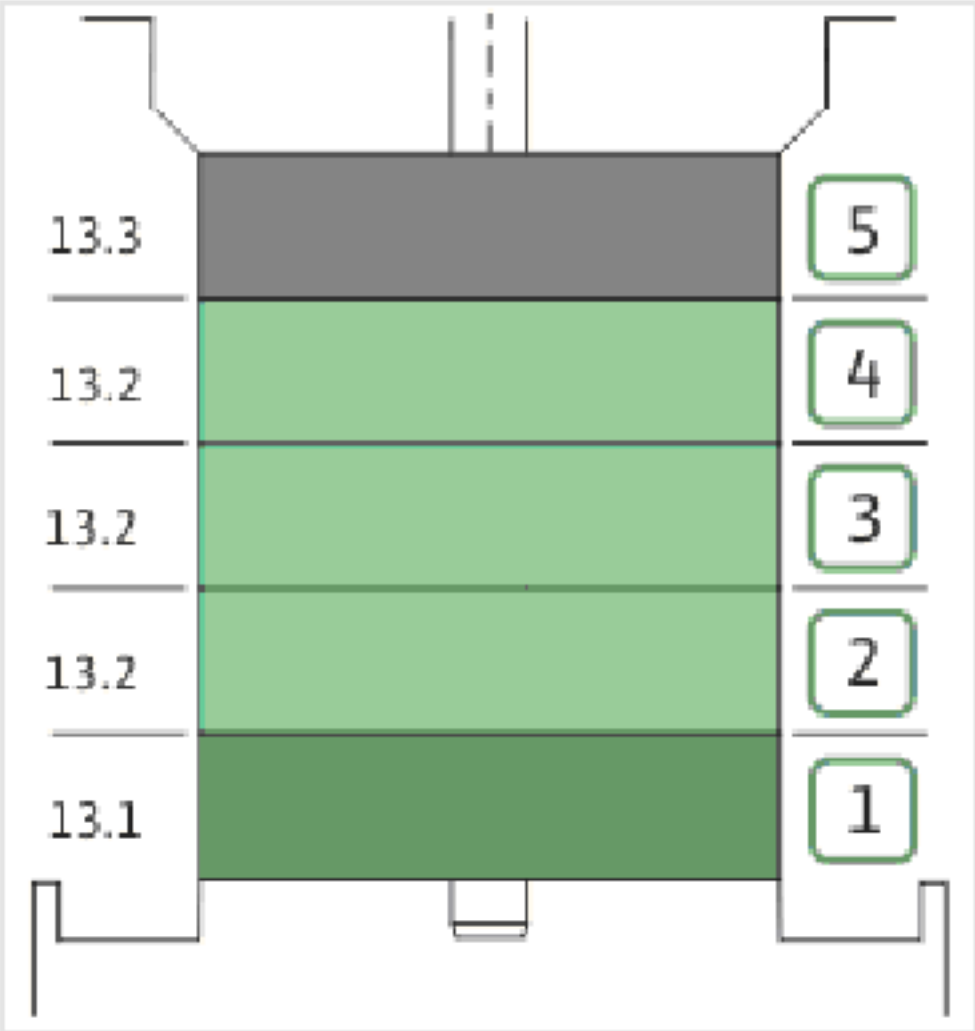
13.3
13.2
13.2
13.2
13.1
5
4
3
2
1

| Item | Article no. | Description | Quantity |
|---|---|---|---|
| 13.1 | 4161192 | INTERMEDIATE STAGE HELIX V36 1.4301 KIT | 1 |
| | | > SLEEVE-SPACER-D22XL16,66-316L | 1 |
| | | > MACH.BEARING-DIFFUSER+NR-M+36-304 | 1 |
| | | > SHAFT-SLEEVE-D26xD22x16-CW | 1 |
| | | > IMPELLER-H1-M+36-304 | 1 |
| 13.1A | 4161200 | > NECK RING 1.STAGE HELIX V36/52 KIT | 1 |
| | | >> NECK-RING-M+36/52 | 1 |
| | | >> HYDRAULIC SUPPORT CAP M+36/52 304 | 1 |
| | | >> SCREW TCL M3X8 A4 POZIDRIV | 1 |
| 13.2 | 4161193 | INTERMEDIATE STAGE HELIX V36 1.4301 KIT | 1 |
| | | > MACH.STD-DIFFUSER+NR-M+36-304 | 1 |
| | | > IMPELLER-H4-M+36-304 | 1 |
| 13.3 | 4161194 | UPPER STAGE HELIX 36 1.4301 KIT | 1 |
| | | > STOP COLLAR OF IMPELLER L20-Ø22-316L | 1 |
| | | > IMPELLER-H4-M+36-304 | 1 |
| | | > MACH.-RIGID-STD-DISCH.-CHAMBER-M+36-304 | 1 |

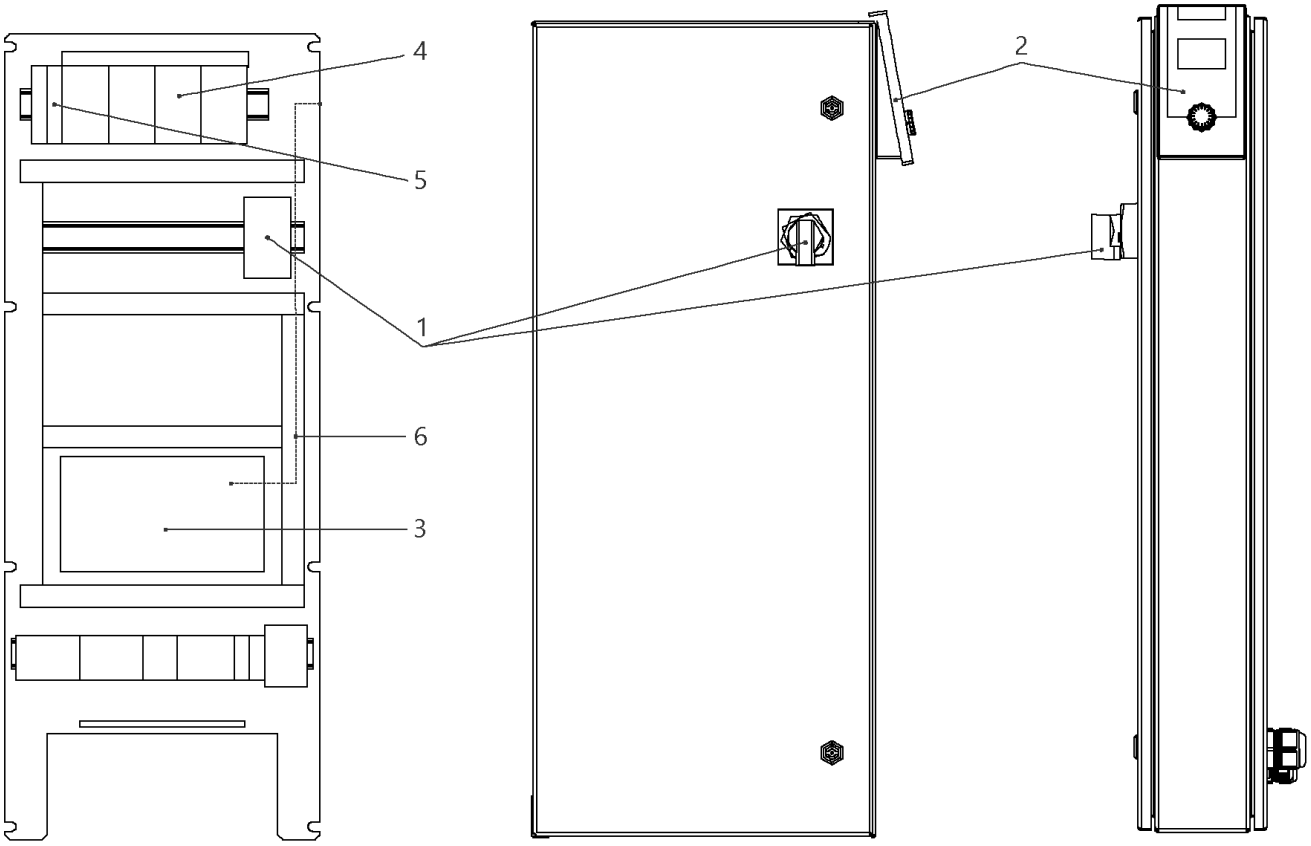
4
5
1
6
3
2

## W-CTRL-SCE-B-2x32A-T34-FM-ND2-AVC-PKG

| Item | Article no. | Description | Quantity |
|---|---|---|---|
| 1 | 2104477 | MAIN SWITCH OT80F3 L105 KIT | 1 |
| 2 | 4184784 | CONTROL PANEL HMI SC KIT | 1 |
| 2 | 4185259 | ASSEMBLY DISPLAY SC PKG VP. | 1 |
| Note: DISPLAY ALONE / PLATINE SEULE | | | |
| 3 | 4185257 | ASSEMBLY CPU SCe Booster VP. | 1 |
| 4 | 2051220 | AUTOM.CIRCUIT BREAKER S203 B40 FOR18,5kW | 1 |
| 5 | 2046288 | CIRCUIT BREAKER S201 B16 | 1 |
| 6 | 4194956 | PATCH CABLE RJ45 CAT6 1,0M BLUE SC-PANEL | 1 |

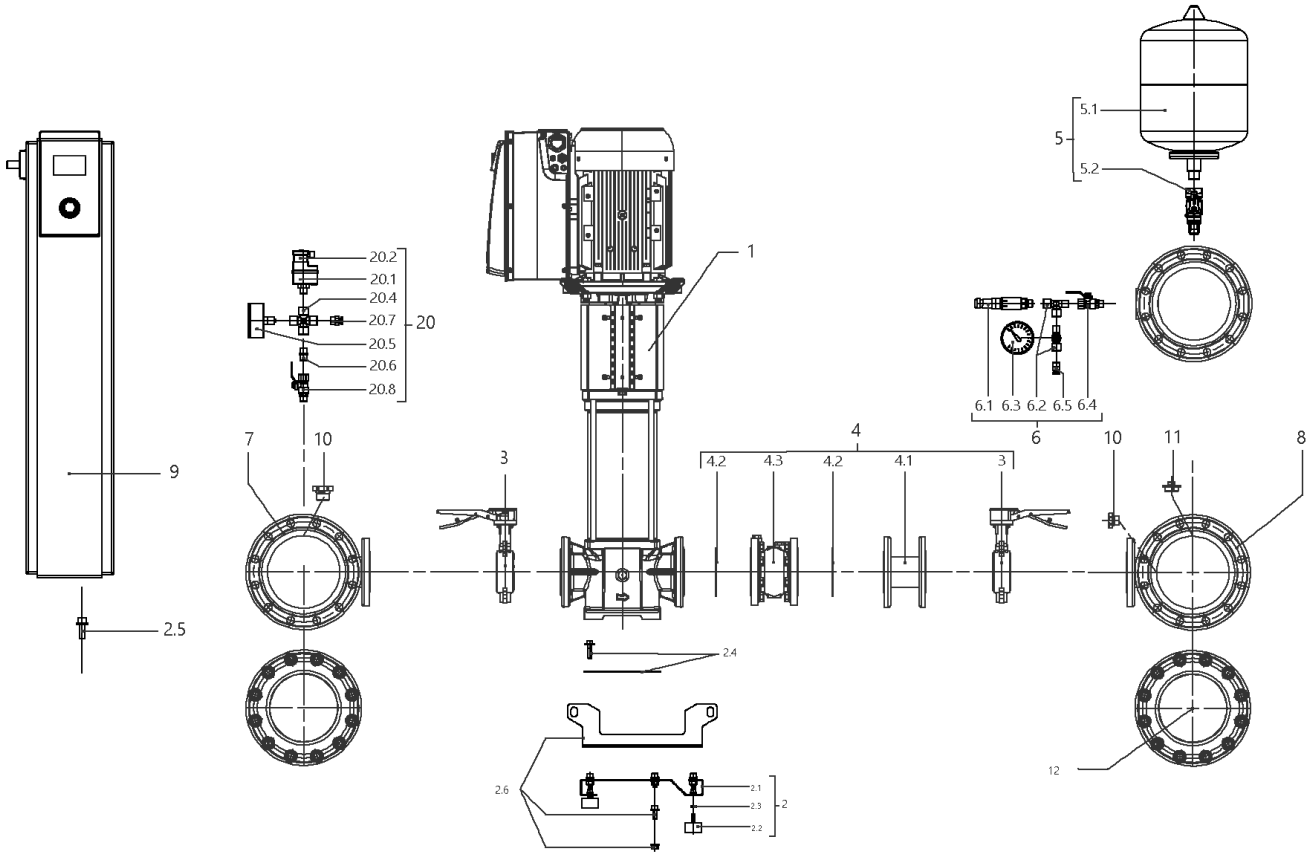
5.1
5
5.2
1
20.2
20.1
20.4
20.7
20
20.5
20.6
20.8
6.1 6.3 6.2 6.5 6.4
6
4
4.2 4.3 4.2 4.1
3
7
10
3
10
11
8
9
2.5
2.4
12
2.6
2.1
2.3
2
2.2

## SiBoost Smart 2HELIX VE5202 (2540925)

| Item | Article no. | Description | Quantity |
|---|---|---|---|
| 1 | | HELIX VE5202-4/16/E/S-FF240 | 1 |
| 2 | 4204893 | BASE PLATE DE2 1250x420 M10 KIT | 1 |
| 2.1 | | > BASE_FR_2x22-52V500L400BOX150-250 | 1 |
| 2.2 | 2027881 | > VIBRATION DAMPER M.10X20 D.70 | 1 |
| 2.3 | 2028281 | > NUT M10 DIN936 (ISO4035) 17H VZ | 1 |
| 2.4 | 4204891 | > HOLDER PUMP Siboost Smart V36/52 KIT | 1 |
| 2.5 | 4197084 | > HOLDER SWITCHBOX WILO Smart Control KIT | 1 |
| 2.6 | 4203979 | > LIFTING Siboost HELIX 22/36 KIT | 1 |
| 3 | | BUTTERFLY VALVE 316 DN80 BLACK PS16 | 1 |
| 4 | 4204922 | DELIVERY SIDE Siboost Helix 52 KIT | 1 |
| 3 | | > BUTTERFLY VALVE 316 DN80 BLACK PS16 | 1 |
| 4.1 | | > FLANGE ADAPTER DN80x125 PN16 AISI304 | 1 |
| 4.2 | 2042897 | > GASKET DN80 PN40 DIN2690 | 1 |
| 4.3 | 4205934 | > CHECK-VALVE-FLANGES-PLUG-DN80-PN16-VP. | 1 |
| 5 | 4203983 | DIAPHREM TANK 8L/PN16 DIN4807/T5 KIT | 1 |
| 5.1 | 2045914 | > DIAPHREM TANK 8L TYP-DD 16BAR | 1 |
| 5.2 | 4189350 | > FLOW FITTING G3/4 FOR DIAPHRAG VESSEL VP | 1 |
| 6 | 4197076 | PRESSURE SENSOR/ GAUGE 0-16BAR KIT | 1 |
| 6.1 | 2085909 | > PRESS.SENSOR 1/4" 0-16BAR 4-20MA VP. | 1 |
| 6.2 | 4197077 | > T-PIECE 1/4" VP. | 1 |
| 6.3 | 2028692 | > PRESSURE GAUGE NG63-PN16-G1/4 | 1 |
| 6.4 | 2028291 | > BALL TAP R1/4" PN42 GIACOMINI R254DL | 1 |
| 6.5 | 2028691 | > BLOWGUN 1/4" MS 30BAR VP. | 1 |
| 7 | 4205935 | PIPE DE2 DN125-2xDN80-1x1/4x1000 VP. | 1 |
| 8 | 4205936 | PIPE DE2 DN125-2xDN80+1x1/4+1x3/4x1000 | 1 |
| 9 | | W-CTRL-SCE-B-2x16A-T34-FM-ND2-AVC-PKG | 1 |
| 10 | 4197079 | PLUG G1/4"x10 AISI304 KIT | 1 |
| 11 | 2032654 | PLUG R3/4" MS VIEGA 1751 | 1 |
| 12 | 4203993 | BLIND-FLANGE DN125 PN10/16-A2 KIT | 1 |
| | 4203994 | > FLAT GASKET D.120/162X2 DN125 FIBRE VP. | 1 |
| | 2094573 | > NUT M16 DIN934 A2 1.4301 VP. | 1 |
| | 2107590 | > SCREW M16x70 DIN933 A2 (8 PIECES) | 1 |
| | 2094572 | > WASHER A17 DIN125 A2 1.4301 VP. | 1 |
| | | > FULL FLANGE ST.DN100 PN16 EN1092-1/05 A2 | 1 |

| Item | Article no. | Description | Quantity |
|---|---|---|---|
| | | > FLANGE COVER DN125 DIN 3443 FORM A | 1 |
| 20 | | ASSEMBLY WMS. DE-EB. +VP | 1 |
| 20.1 | 2028652 | > PRESSURE SWITCH PS3-ASR 1/(1,3) VP. | 1 |
| 20.2 | 2130983 | > PLUG PS3-415 WITH KABEL 1,5M 2NO VP. | 1 |
| 20.4 | 2028290 | > CROSSPIECE R1/4" MS-NICKEL | 1 |
| 20.5 | 2028687 | > PRESSURE GAUGE NG63 R1/4" HI.0-6BAR | 1 |
| 20.6 | 2054268 | > DUAL NIPPLE G1/4" x G1/4" MS VP. | 1 |
| 20.7 | 2028691 | > BLOWGUN 1/4" MS 30BAR VP. | 1 |
| 20.8 | 2028291 | > BALL TAP R1/4" PN42 GIACOMINI R254DL | 1 |

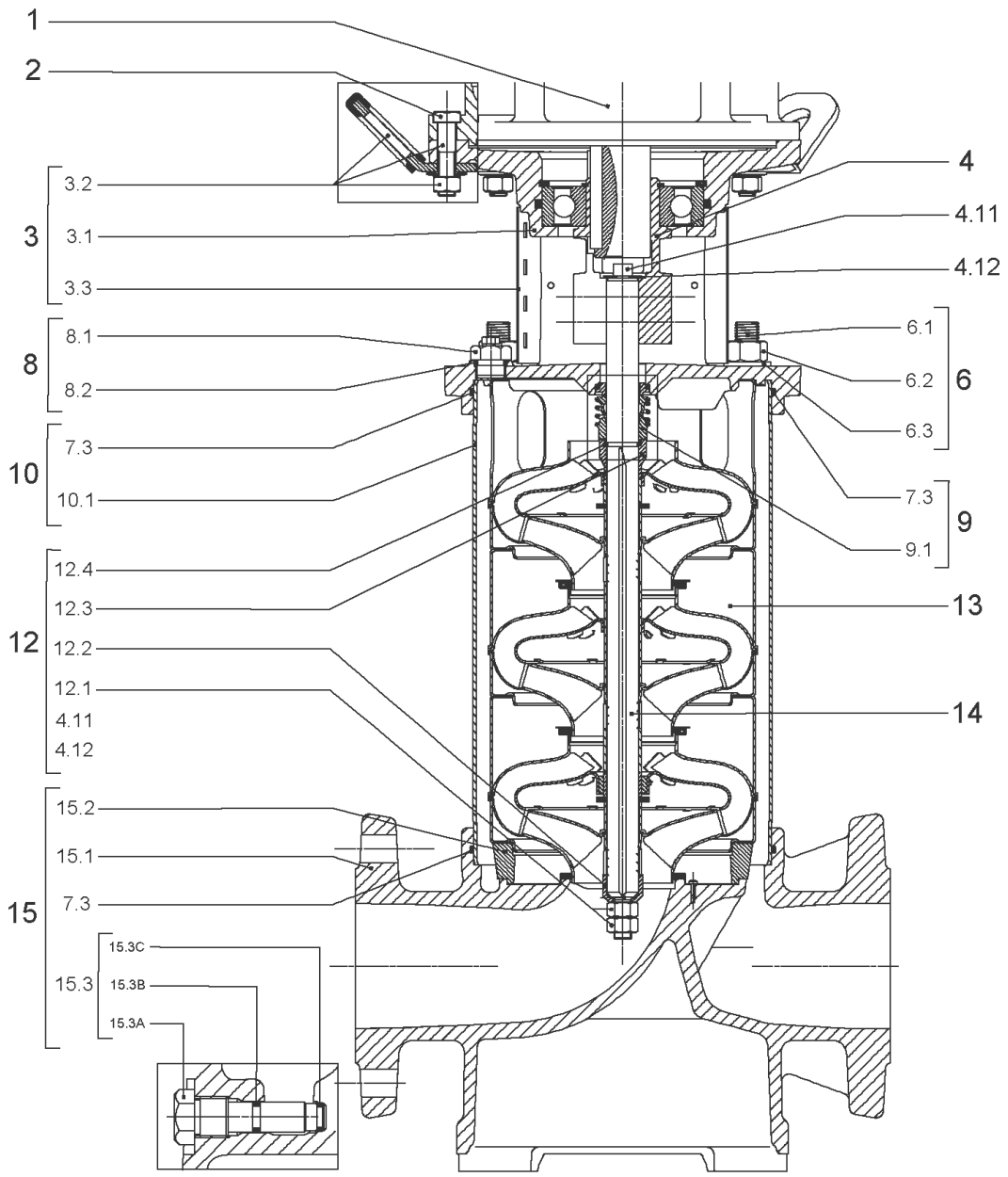
1
2
3
3.2
3.1
3.3
8
8.1
8.2
10
7.3
10.1
12
12.4
12.3
12.2
12.1
4.11
4.12
15
15.2
15.1
7.3
15.3
15.3C
15.3B
15.3A
4
4.11
4.12
6
6.1
6.2
6.3
9
7.3
9.1
13
14

| Item | Article no. | Description | Quantity |
|---|---|---|---|
| 1 | | DRIVE HELIX-VE5202-FF240-IE2-ATB KIT | 1 |
| Note: MOTOR BRAND ATB | | | |
| 1 | | DRIVE HELIX-VE5202-FF240-IE4-WE KIT | 1 |
| Note: MOTOR BRAND WILO ELEC | | | |
| | | SPARE PARTS MOTOR:ON REQUEST | 1 |
| 2 | 4174093 | SCREW M12X50 (4 PIECES) | 1 |
| 3 | 4186358 | LANTERN HELIX OPTI 8" FF240 KIT | 1 |
| 3.1 | | > M+8_LANTERN_ONE-PIECE_FF240_CATA_DWA | 1 |
| 3.2 | 4186346 | > EYELET CPL.FF240 HELIX (4 PIECES) | 1 |
| 3.3 | 4184853 | > COUPLING PROTECTOR FT HELIX 8'' KIT | 1 |
| 4 | 4186347 | COUPLING D.22XD.38 FF240T130 HELIX KIT | 1 |
| 6 | 4180018 | STUD BOLT M16X267 KIT | 1 |
| 6.1 | | > TIE BOLT M16-267x24x44-1.4057 | 1 |
| 6.2 | 4179562 | > NUT M16 8.8 ISO4032 (4 PIECES) | 1 |
| 6.3 | 4097852 | > WASHER-CS-16.4-32-2.8-NFE25-511-A2 | 1 |
| 8 | 4186377 | FILING/PURGING PLUG 304 HELIX KIT | 1 |
| 8.1 | | > FILLING/VENTING-PLUG-MVI8/10"-304 | 1 |
| 8.2 | 4032291 | > O-RING 17x3 EPDM KTW/WRC | 1 |
| 9 | 4192148 | SEAL-KIT-HELIX22-36-52 FIRST O/E | 1 |
| 7.3 | 4179571 | > O-RING HOUSING PIPE HELIX22/36/52 VP. | 1 |
| 9.1 | 4179573 | > M.SEAL.HELIX22-36-52 O/E VP. | 1 |
| 10 | 4179582 | HOUSING PIPE D.204X230 1.4307 KIT | 1 |
| 7.3 | 4179571 | > O-RING HOUSING PIPE HELIX22/36/52 VP. | 1 |
| 10.1 | | > HOUSING-PIPE Ø204-M+5202-304 | 1 |
| 12 | 4186386 | SHAFT EQUIPMENT HELIX 52 FIRST KIT | 1 |
| 13 | | HYDRAULIC HELIX V 5202 | 1 |
| 14 | 4186344 | SHAFT D.22X351 1.4057 VP. | 1 |
| 15 | 4186388 | EQUIPED HOUSING HELIX FIRST DN80 DWA KIT | 1 |
| 15.1 | | > PUMP CASING MONO.GJL M+8" DN80 DWA | 1 |
| 15.2 | | > HYD.SUP.M+8" ONE PIECE HOUSING N80 DWA | 1 |
| 15.3 | 4106048 | > DRAIN/PRIMING PLUG EPDM HELIX FIRST KIT | 1 |
| 15.3A | | >> DRAIN AND PRIMING PLUG-VMI10"-304 | 1 |
| 15.3B | 4032293 | >> O-RING-10x3-EPDM-KTW/WRC | 1 |
| 15.3C | 4233957 | >> O-RING ID.9 EPDM VP. | 1 |

| Item | Article no. | Description | Quantity |
|---|---|---|---|
| 7.3 | 4179571 | > O-RING HOUSING PIPE HELIX22/36/52 VP. | 1 |
| 13.1A | 4161200 | > NECK RING 1.STAGE HELIX V36/52 KIT | 1 |
| | | >> NECK-RING-M+36/52 | 1 |
| | | >> HYDRAULIC SUPPORT CAP M+36/52 304 | 1 |
| | | >> SCREW TCL M3X8 A4 POZIDRIV | 1 |

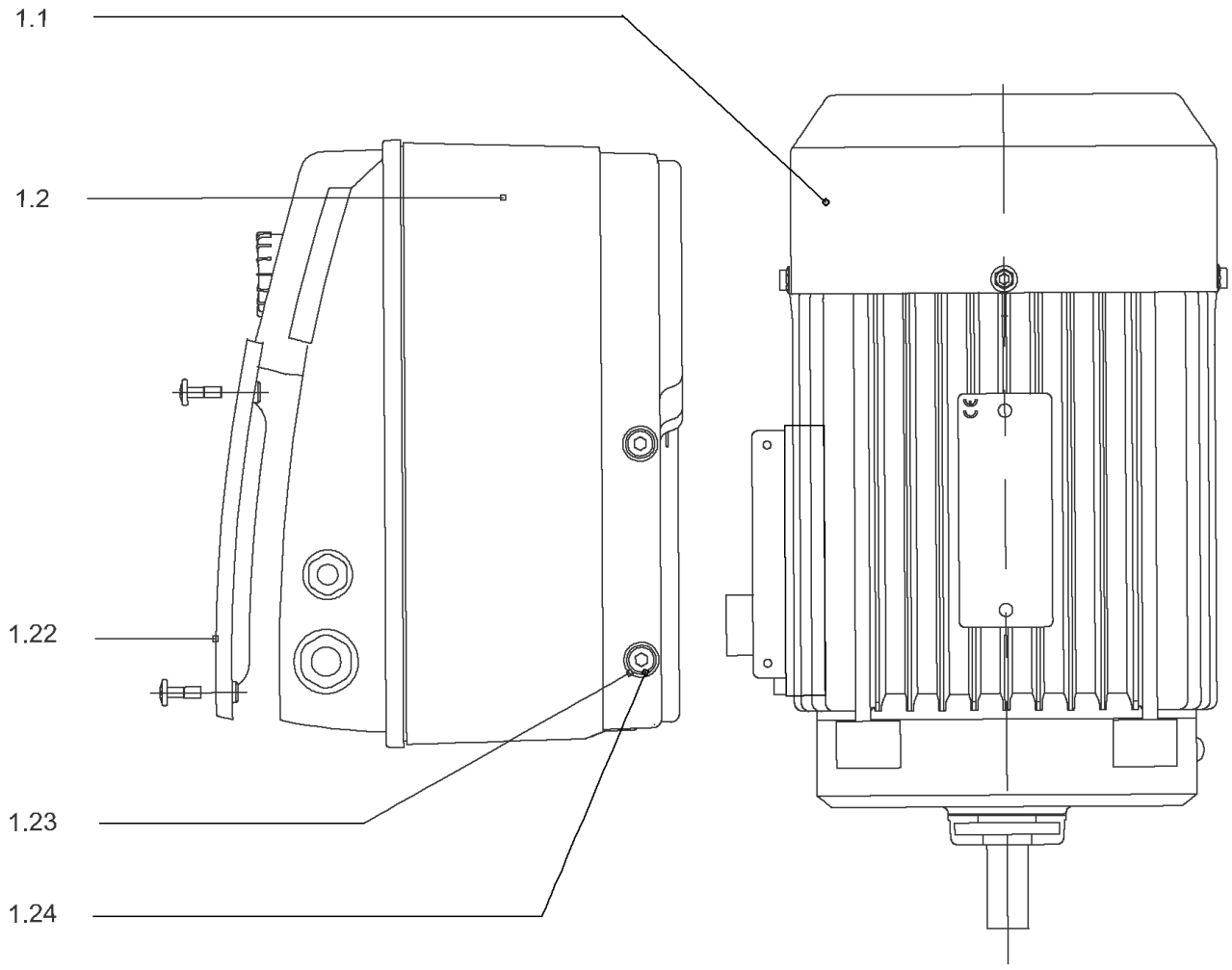
1.1
1.2
1.22
1.23
1.24

## DRIVE HELIX-VE5202-FF240-IE2-ATB KIT

| Item | Article no. | Description | Quantity |
|---|---|---|---|
| | | M7,5-2T540P55V1-132F24-SU-N38-AD-IE2-ATB | 1 |
| Note: no longer available/nicht mehrlieferbar/n'est plus disponible | | | |
| | | SPARE PARTS MOTOR:ON REQUEST | 1 |
| | 4195917 | MODULE HELIX-VE5202-IE2-ATB KIT | 1 |
| 1.22 | 2111344 | > MODULE COVER/GASKET TL5 KIT | 1 |
| 1.23 | 4215716 | > SCREW M5X16 DIN912 8.8 A2A (4pieces) VP. | 1 |
| 1.24 | 2057978 | > RONDELLE A5,3 DIN6797 FST ZN (4 PIECES) | 1 |

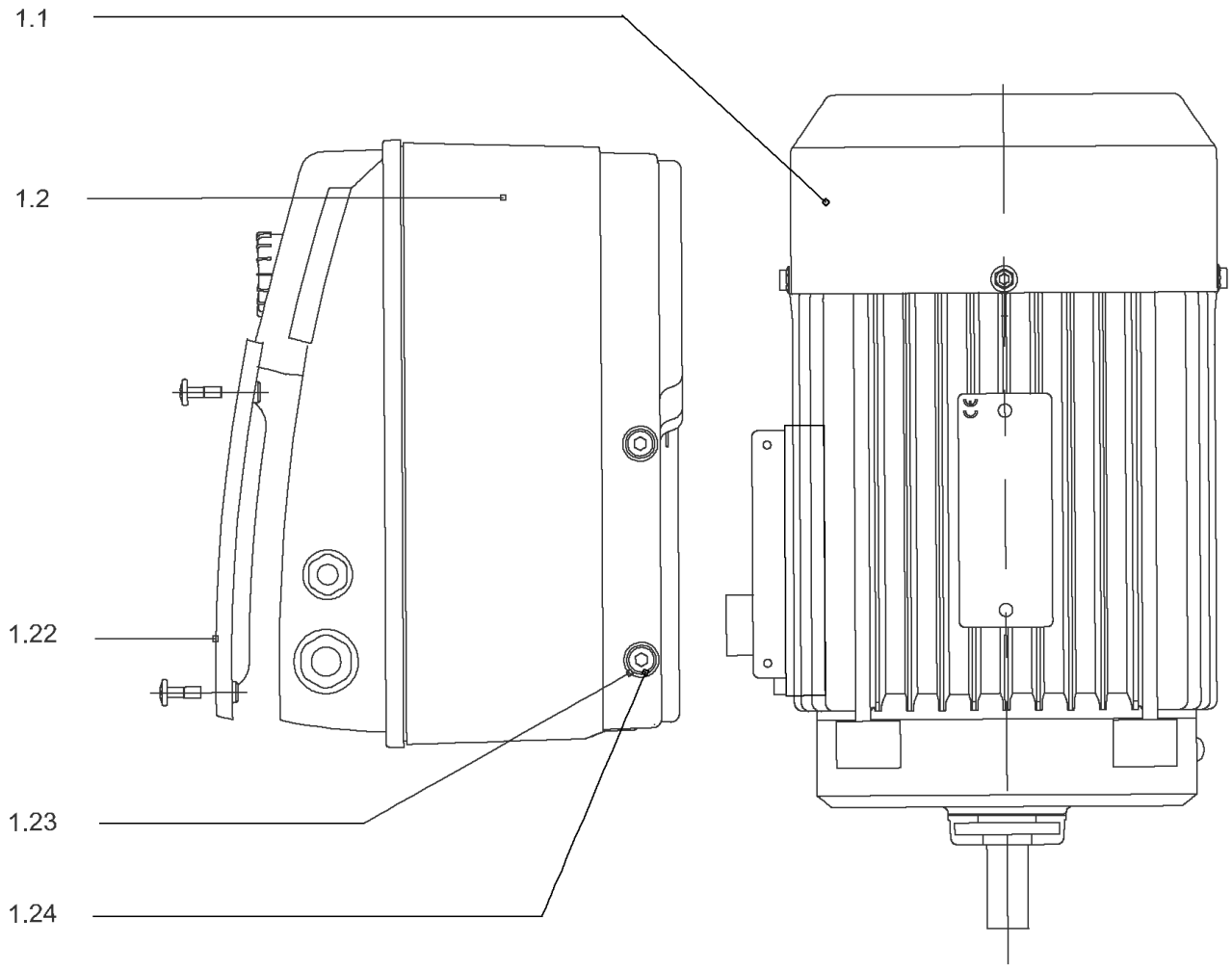
1.1
1.2
1.22
1.23
1.24

## DRIVE HELIX-VE5202-FF240-IE4-WE KIT

| Item | Article no. | Description | Quantity |
|---|---|---|---|
| 1.1 | 4207936 | MO.7.5/2/132FF240 3~400V 50Hz IE4 WE VP. | 1 |
| | | SPARE PARTS MOTOR:ON REQUEST | 1 |
| 1.2 | 4212641 | MODULE HELIX-VE5202-IE4-WE KIT | 1 |
| 1.22 | 2111344 | > MODULE COVER/GASKET TL5 KIT | 1 |
| 1.23 | 4215716 | > SCREW M5X16 DIN912 8.8 A2A (4pieces) VP. | 1 |
| 1.24 | 2057978 | > RONDELLE A5,3 DIN6797 FST ZN (4 PIECES) | 1 |

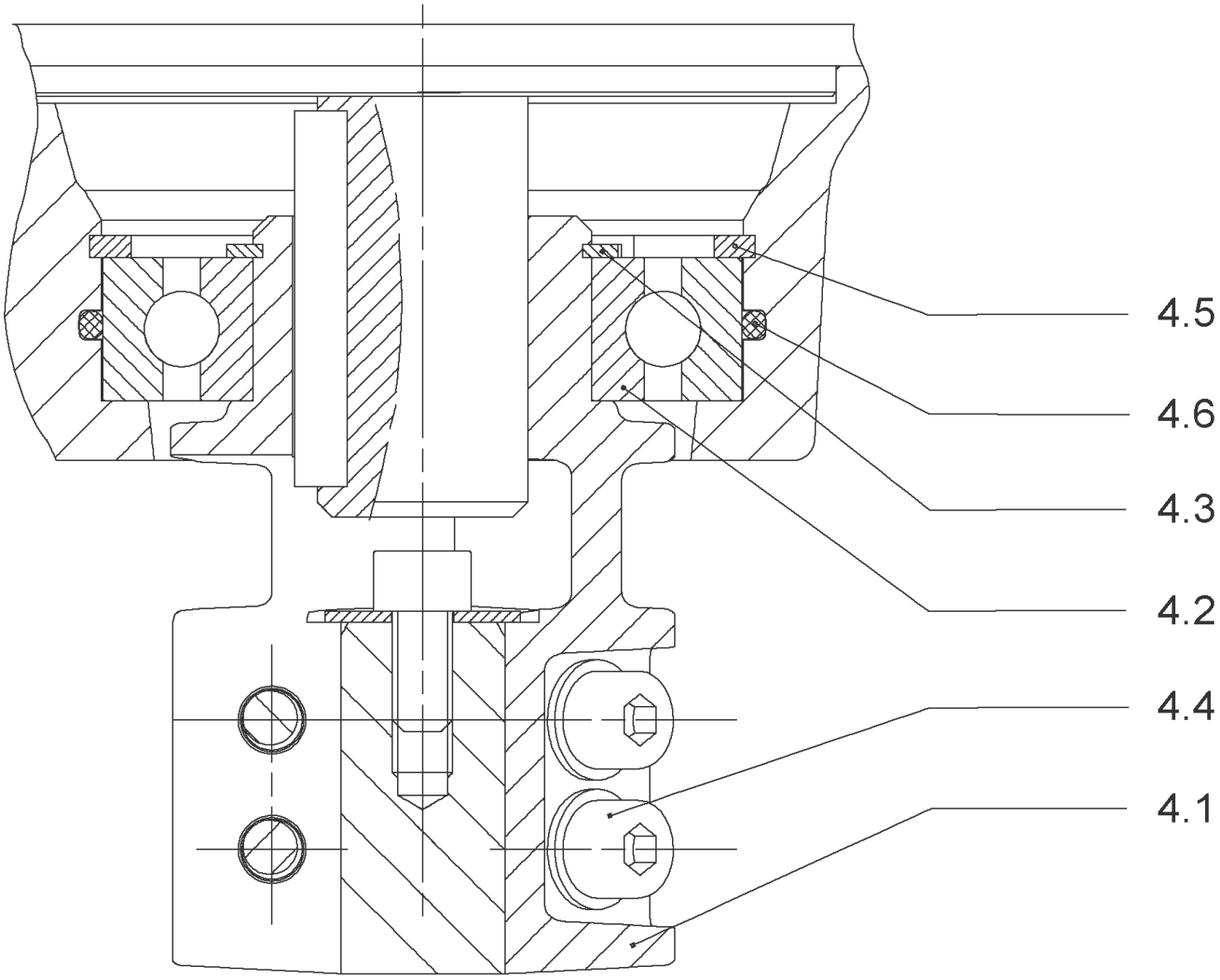
4.5
4.6
4.3
4.2
4.4
4.1

## COUPLING D.22XD.38 FF240T130 HELIX KIT (4186347)

| Item | Article no. | Description | Quantity |
|---|---|---|---|
| 4.1 | | COUPLING-VMI-D22xD38-FF265-MACHINED | 1 |
| 4.2 | 2131017 | BALL BEARING 6310/ZZ-C4(HT)VP. | 1 |
| 4.3 | 4234253 | CIRCLIP-FOR-SHAFT-D50x2 VP. | 1 |
| 4.4 | 4157726 | SCREW KIT M8X30 (4 PIECES) | 1 |
| 4.5 | 4234255 | CIRCLIPS 110X4 VP. | 1 |
| 4.6 | 4233944 | O-RING ID.110 VP. | 1 |
| | | NOMEL CONTACT WASHER 8x16x1,4 STEEL ZC | 1 |

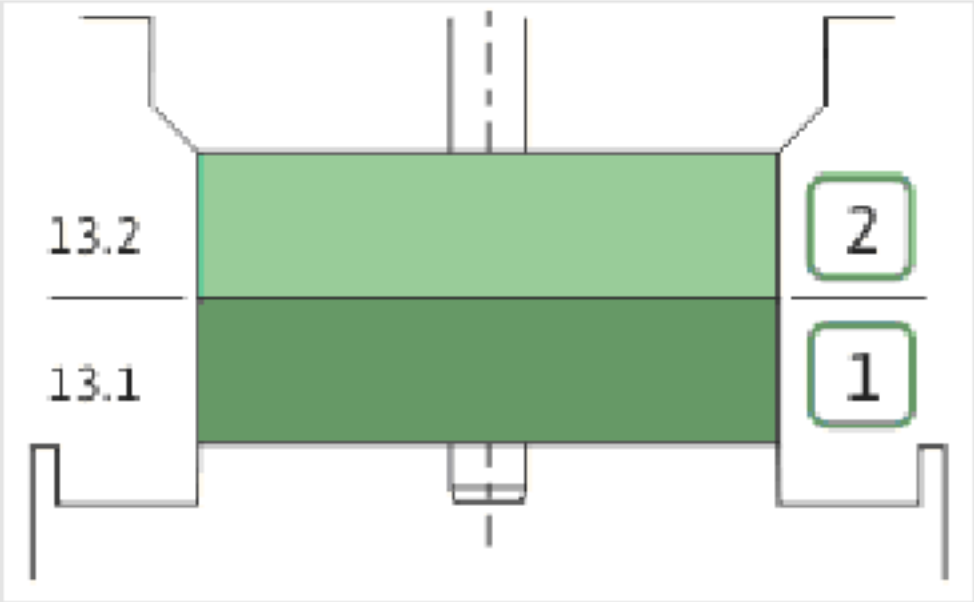
13.2
13.1
2
1

| Item | Article no. | Description | Quantity |
|---|---|---|---|
| 13.1 | 4164727 | INTERMEDIAIRE STAGE HELIX 52 1.4301 KIT | 1 |
| | | > SLEEVE-SPACER-D22XL30,42-316L | 1 |
| | | > MACH.BEARING-DIFFUSER+NR-M+52-304 | 1 |
| | | > SHAFT-SLEEVE-D26xD22x16-CW | 1 |
| | | > SPACER WASHER D22,3XD36 L3-316L | 1 |
| | | > IMPELLER-H2-M+52-304 | 1 |
| 13.1A | 4161200 | > NECK RING 1.STAGE HELIX V36/52 KIT | 1 |
| | | >> NECK-RING-M+36/52 | 1 |
| | | >> HYDRAULIC SUPPORT CAP M+36/52 304 | 1 |
| | | >> SCREW TCL M3X8 A4 POZIDRIV | 1 |
| 13.2 | 4164729 | UPPER-STAGE HELIX 52 1.4301 KIT | 1 |
| | | > STOP COLLAR OF IMPELLER L27,6-Ø22-316L | 1 |
| | | > SLEEVE-SPACER-D22XL16,66-316L | 1 |
| | | > SPACER WASHER D22,3XD36 L3-316L | 1 |
| | | > IMPELLER-H2-M+52-304 | 1 |
| | | > MACH.STD-DISCHARGE-CHAMBER-M+52-304 | 1 |

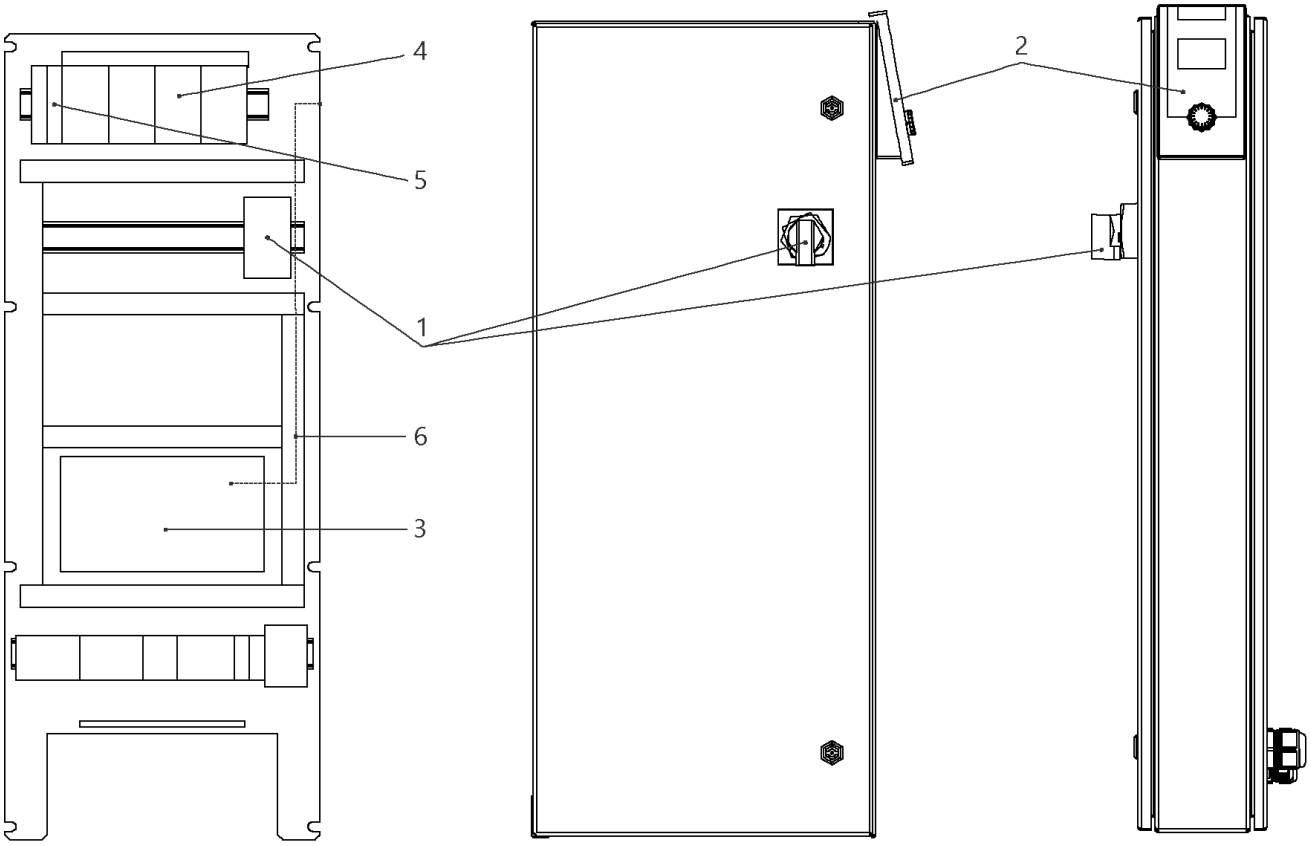
4
5
1
6
3
2

## W-CTRL-SCE-B-2x16A-T34-FM-ND2-AVC-PKG

| Item | Article no. | Description | Quantity |
|---|---|---|---|
| 1 | 2104473 | MAIN SWITCH OT63F3 L105 KIT | 1 |
| Note: TO / BIS / JUSQU'AU 30/06/2015 | | | |
| 1 | 2104470 | MAIN SWITCH OT40F3 L250 KIT | 1 |
| Note: FROM / AB / À PARTIR DU 01/07/2015 | | | |
| 2 | 4184784 | CONTROL PANEL HMI SC KIT | 1 |
| 2 | 4185259 | ASSEMBLY DISPLAY SC PKG VP. | 1 |
| Note: DISPLAY ALONE / PLATINE SEULE | | | |
| 3 | 4185257 | ASSEMBLY CPU SCe Booster VP. | 1 |
| 4 | 4197832 | AUTOMATIC CIRCUIT BREAKER S203 B20 VP. | 1 |
| 5 | 2046288 | CIRCUIT BREAKER S201 B16 | 1 |
| 6 | 4194956 | PATCH CABLE RJ45 CAT6 1,0M BLUE SC-PANEL | 1 |

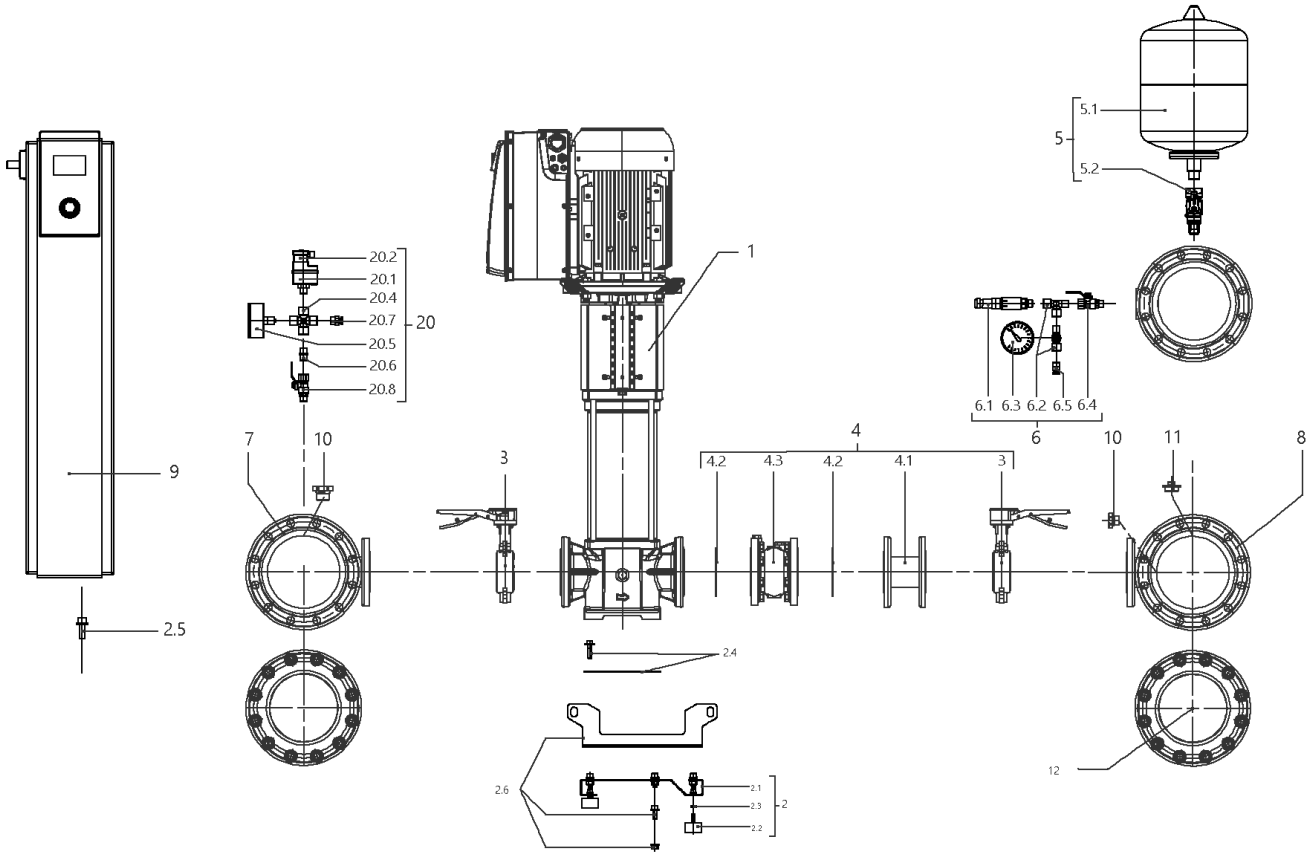
5.1
5
5.2
1
20.2
20.1
20.4
20.7
20
20.5
20.6
20.8
6.1 6.3 6.2 6.5 6.4
6
4
4.2 4.3 4.2 4.1
3
7
10
3
10
11
8
9
2.5
2.4
12
2.6
2.1
2.3
2
2.2

## SiBoost Smart 2HELIX VE5203 (2540926)

| Item | Article no. | Description | Quantity |
|---|---|---|---|
| 1 | | HELIX VE5203-4/16/E/KS/2G | 1 |
| 2 | 4204893 | BASE PLATE DE2 1250x420 M10 KIT | 1 |
| 2.1 | | > BASE_FR_2x22-52V500L400BOX150-250 | 1 |
| 2.2 | 2027881 | > VIBRATION DAMPER M.10X20 D.70 | 1 |
| 2.3 | 2028281 | > NUT M10 DIN936 (ISO4035) 17H VZ | 1 |
| 2.4 | 4204891 | > HOLDER PUMP Siboost Smart V36/52 KIT | 1 |
| 2.5 | 4197084 | > HOLDER SWITCHBOX WILO Smart Control KIT | 1 |
| 2.6 | 4203979 | > LIFTING Siboost HELIX 22/36 KIT | 1 |
| 3 | | BUTTERFLY VALVE 316 DN80 BLACK PS16 | 1 |
| 4 | 4204922 | DELIVERY SIDE Siboost Helix 52 KIT | 1 |
| 3 | | > BUTTERFLY VALVE 316 DN80 BLACK PS16 | 1 |
| 4.1 | | > FLANGE ADAPTER DN80x125 PN16 AISI304 | 1 |
| 4.2 | 2042897 | > GASKET DN80 PN40 DIN2690 | 1 |
| 4.3 | 4205934 | > CHECK-VALVE-FLANGES-PLUG-DN80-PN16-VP. | 1 |
| 5 | 4203983 | DIAPHREM TANK 8L/PN16 DIN4807/T5 KIT | 1 |
| 5.1 | 2045914 | > DIAPHREM TANK 8L TYP-DD 16BAR | 1 |
| 5.2 | 4189350 | > FLOW FITTING G3/4 FOR DIAPHRAG VESSEL VP | 1 |
| 6 | 4197076 | PRESSURE SENSOR/ GAUGE 0-16BAR KIT | 1 |
| 6.1 | 2085909 | > PRESS.SENSOR 1/4" 0-16BAR 4-20MA VP. | 1 |
| 6.2 | 4197077 | > T-PIECE 1/4" VP. | 1 |
| 6.3 | 2028692 | > PRESSURE GAUGE NG63-PN16-G1/4 | 1 |
| 6.4 | 2028291 | > BALL TAP R1/4" PN42 GIACOMINI R254DL | 1 |
| 6.5 | 2028691 | > BLOWGUN 1/4" MS 30BAR VP. | 1 |
| 7 | 4205935 | PIPE DE2 DN125-2xDN80-1x1/4x1000 VP. | 1 |
| 8 | 4205936 | PIPE DE2 DN125-2xDN80+1x1/4+1x3/4x1000 | 1 |
| 9 | | W-CTRL-SCE-B-2x24A-T34-FM-ND2-AVC-PKG | 1 |
| 10 | 4197079 | PLUG G1/4"x10 AISI304 KIT | 1 |
| 11 | 2032654 | PLUG R3/4" MS VIEGA 1751 | 1 |
| 12 | 4203993 | BLIND-FLANGE DN125 PN10/16-A2 KIT | 1 |
| | 4203994 | > FLAT GASKET D.120/162X2 DN125 FIBRE VP. | 1 |
| | 2094573 | > NUT M16 DIN934 A2 1.4301 VP. | 1 |
| | 2107590 | > SCREW M16x70 DIN933 A2 (8 PIECES) | 1 |
| | 2094572 | > WASHER A17 DIN125 A2 1.4301 VP. | 1 |
| | | > FULL FLANGE ST.DN100 PN16 EN1092-1/05 A2 | 1 |

| Item | Article no. | Description | Quantity |
|---|---|---|---|
| | | > FLANGE COVER DN125 DIN 3443 FORM A | 1 |
| 20 | | ASSEMBLY WMS. DE-EB. +VP | 1 |
| 20.1 | 2028652 | > PRESSURE SWITCH PS3-ASR 1/(1,3) VP. | 1 |
| 20.2 | 2130983 | > PLUG PS3-415 WITH KABEL 1,5M 2NO VP. | 1 |
| 20.4 | 2028290 | > CROSSPIECE R1/4" MS-NICKEL | 1 |
| 20.5 | 2028687 | > PRESSURE GAUGE NG63 R1/4" HI.0-6BAR | 1 |
| 20.6 | 2054268 | > DUAL NIPPLE G1/4" x G1/4" MS VP. | 1 |
| 20.7 | 2028691 | > BLOWGUN 1/4" MS 30BAR VP. | 1 |
| 20.8 | 2028291 | > BALL TAP R1/4" PN42 GIACOMINI R254DL | 1 |

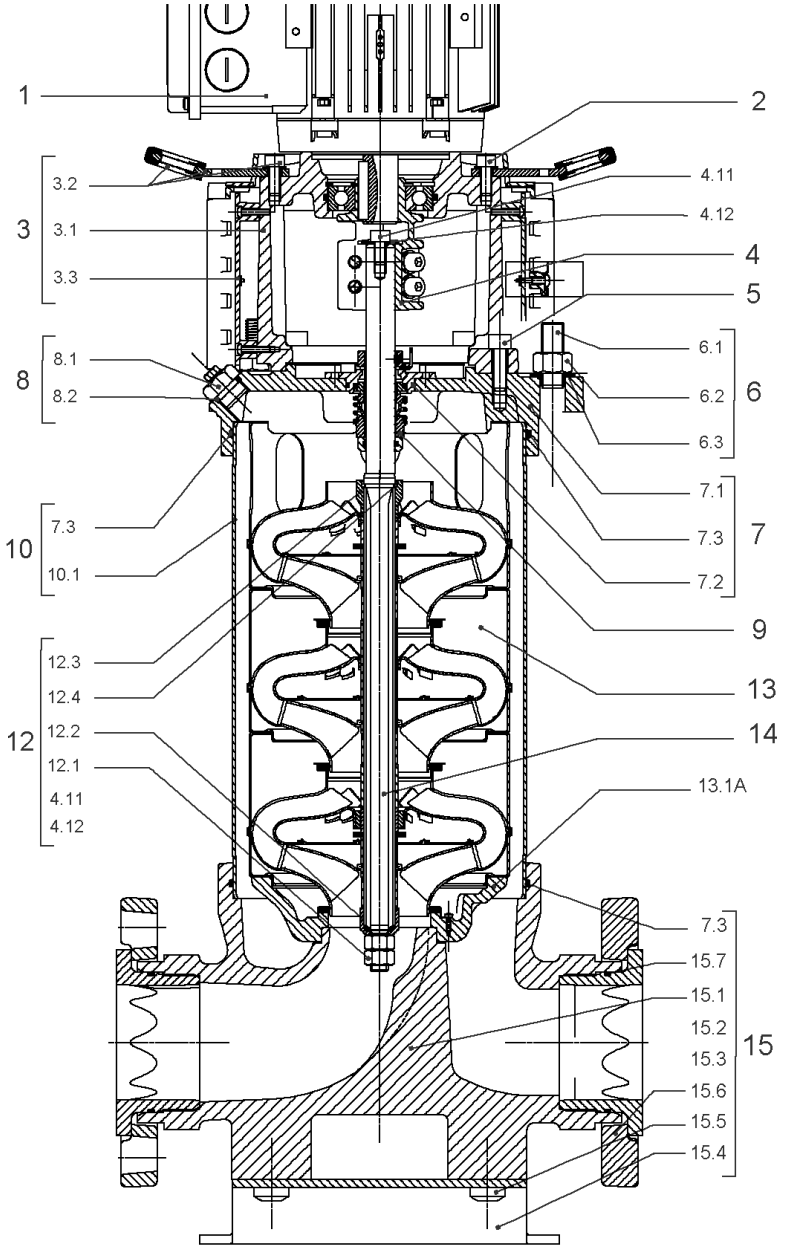
1
2
3
3.2
3.1
3.3
4.11
4.12
4
5
8
8.1
8.2
6.1
6.2
6.3
6
7.1
7.3
7.2
7
10
7.3
10.1
9
12
12.3
12.4
12.2
12.1
4.11
4.12
13
14
13.1A
7.3
15.7
15.1
15.2
15.3
15.6
15.5
15.4
15

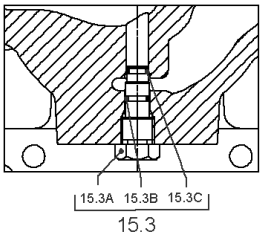
15.3A
15.3B
15.3C
15.3

## HELIX VE5203-4/16/E/KS/2G

| Item | Article no. | Description | Quantity |
|---|---|---|---|
| 1 | | DRIVE HELIX VE5203-IE2-ARC KIT | 1 |
| Note: no longer available/nicht mehrlieferbar/n'est plus disponible | | | |
| 1 | 4218538 | DRIVE HELIX VE5203-IE4-WEG KIT | 1 |
| Note: MOTOR BRAND WEG | | | |
| 2 | 4179586 | SCREW M16X60 (4 PIECES) | 1 |
| 3 | 4157721 | LANTERN HELIX 22/36 FF300 BB6312 KIT | 1 |
| 3.1 | | > LANTERN FF300 M+ GJL MACHINED+CATA 6312 | 1 |
| 3.2 | 4179589 | > EYELET CPL.FF300 HELIX(4 PIECES) | 1 |
| 3.3 | 4143969 | > COUPLING PROTECT HELIX FF KIT | 1 |
| 4 | 4143966 | COUPLING D.20XD.38 FF300 KIT | 1 |
| 5 | 4157725 | SCREW M10X40 (4 PIECES) | 1 |
| 6 | 4179592 | STUD BOLT M16X405 KIT | 1 |
| 6.1 | | > TIE BOLT M16-405x24x44-1.4057 | 1 |
| 6.2 | 4179562 | > NUT M16 8.8 ISO4032 (4 PIECES) | 1 |
| 6.3 | 4097852 | > WASHER-CS-16.4-32-2.8-NFE25-511-A2 | 1 |
| 7 | 4179565 | END SHIELD HELIX 8'' EPDM KIT | 1 |
| 7.1 | | > END SHIELD M+ GJL MACHINED+CATA | 1 |
| 7.2 | 4179564 | > O-RING D.42.52x2.62 EPDM VP. | 1 |
| 7.3 | 4179571 | > O-RING HOUSING PIPE HELIX22/36/52 VP. | 1 |
| 8 | 4186377 | FILING/PURGING PLUG 304 HELIX KIT | 1 |
| 8.1 | | > FILLING/VENTING-PLUG-MVI8/10"-304 | 1 |
| 8.2 | 4032291 | > O-RING 17x3 EPDM KTW/WRC | 1 |
| 9 | 4143973 | CARTRIDGE HELIX22-36-52 O/E KIT | 1 |
| 10 | 4179593 | HOUSING PIPE D.204X330 1.4307 KIT | 1 |
| 7.3 | 4179571 | > O-RING HOUSING PIPE HELIX22/36/52 VP. | 1 |
| 10.1 | | > HOUSING-PIPE Ø204-M+3604/5203-304 | 1 |
| 11 | 4179583 | CENTRALIZER HELIX 8'' 52 VP. | 1 |
| 12 | 4164724 | SHAFT EQUIPMENT HELIX V52 KIT | 1 |
| 13 | | HYDRAULIC HELIX V 5203 | 1 |
| 14 | 4179599 | SHAFTS D.22X504 1.4057 VP. | 1 |
| 15 | 4186388 | EQUIPED HOUSING HELIX FIRST DN80 DWA KIT | 1 |
| 15.1 | | > PUMP CASING MONO.GJL M+8" DN80 DWA | 1 |
| 15.2 | | > HYD.SUP.M+8" ONE PIECE HOUSING N80 DWA | 1 |
| 15.3 | 4106048 | > DRAIN/PRIMING PLUG EPDM HELIX FIRST KIT | 1 |

| Item | Article no. | Description | Quantity |
|---|---|---|---|
| 15.3A | | >> DRAIN AND PRIMING PLUG-VMI10"-304 | 1 |
| 15.3B | 4032293 | >> O-RING-10x3-EPDM-KTW/WRC | 1 |
| 15.3C | 4233957 | >> O-RING ID.9 EPDM VP. | 1 |
| 7.3 | 4179571 | > O-RING HOUSING PIPE HELIX22/36/52 VP. | 1 |
| 13.1A | 4161200 | > NECK RING 1.STAGE HELIX V36/52 KIT | 1 |
| | | >> NECK-RING-M+36/52 | 1 |
| | | >> HYDRAULIC SUPPORT CAP M+36/52 304 | 1 |
| | | >> SCREW TCL M3X8 A4 POZIDRIV | 1 |

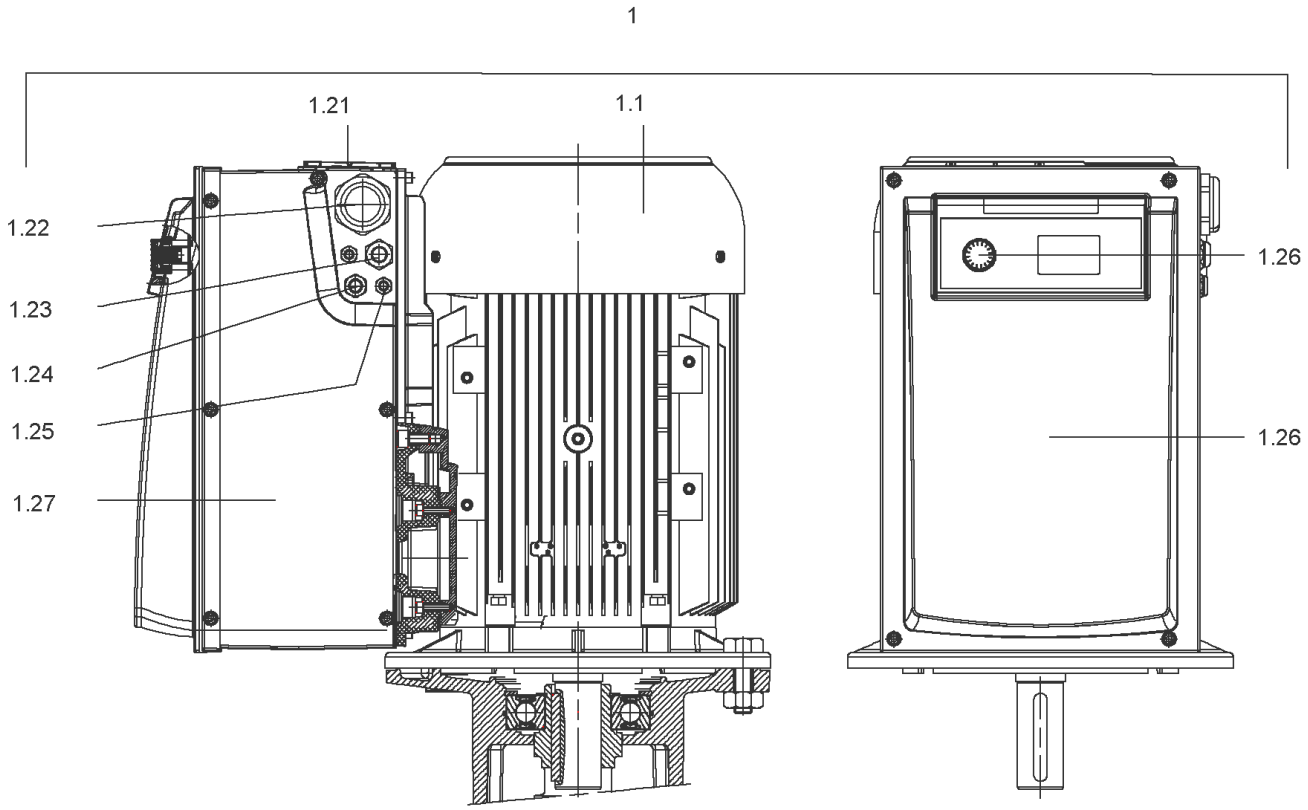
1
1.21
1.1
1.22
1.23
1.24
1.25
1.27
1.26
1.26

## DRIVE HELIX VE5203-IE2-ARC KIT

| Item | Article no. | Description | Quantity |
|---|---|---|---|
| 1.1 | | M11-2T540P55V1-160F300-N42-IE2 | 1 |
| | | SPARE PARTS MOTOR:ON REQUEST | 1 |
| 1.21 | 2132102 | FAN SMALL TL6/7 FF KIT | 1 |
| 1.25 | 2132097 | CABLE CONNECTION M12 TL6/7 FF VP. | 1 |
| 1.24 | 2132098 | CABLE CONNECTION M16 TL6/7 FF VP. | 1 |
| 1.23 | 2132099 | CABLE CONNECTION M20 TL6/7 FF VP. | 1 |
| 1.22 | 2132100 | CABLE CONNECTION SMALL M40 TL6/7 FF VP. | 1 |
| 1.27 | 2132104 | COVER SIDE TL6/7 FF CPL.VP. | 1 |
| 1.26 | 2132452 | MODULE COVER/BUTTON TL6/7 FF VP. | 1 |

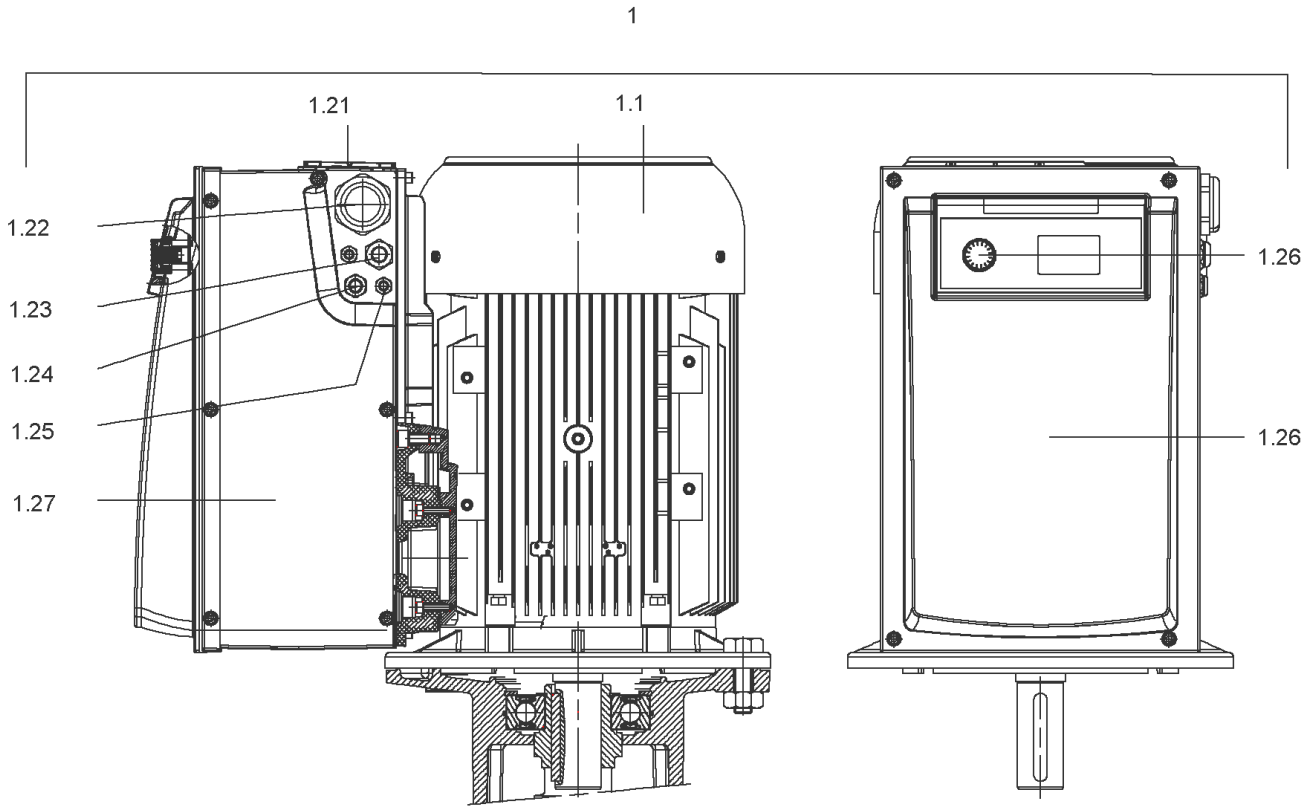
1
1.21
1.1
1.22
1.23
1.24
1.25
1.27
1.26
1.26

## DRIVE HELIX VE5203-IE4-WEG KIT (4218538)

| Item | Article no. | Description | Quantity |
|---|---|---|---|
| 1.1 | | M11-2T540P55V1-160F30-N42-ADAPT-IE4-WEG | 1 |
| | | SPARE PARTS MOTOR:ON REQUEST | 1 |
| 1.21 | 2132102 | FAN SMALL TL6/7 FF KIT | 1 |
| 1.25 | 2132097 | CABLE CONNECTION M12 TL6/7 FF VP. | 1 |
| 1.24 | 2132098 | CABLE CONNECTION M16 TL6/7 FF VP. | 1 |
| 1.23 | 2132099 | CABLE CONNECTION M20 TL6/7 FF VP. | 1 |
| 1.22 | 2132100 | CABLE CONNECTION SMALL M40 TL6/7 FF VP. | 1 |
| 1.27 | 2132104 | COVER SIDE TL6/7 FF CPL.VP. | 1 |
| 1.26 | 2132452 | MODULE COVER/BUTTON TL6/7 FF VP. | 1 |

## COUPLING D.20XD.38 FF300 KIT (4143966)

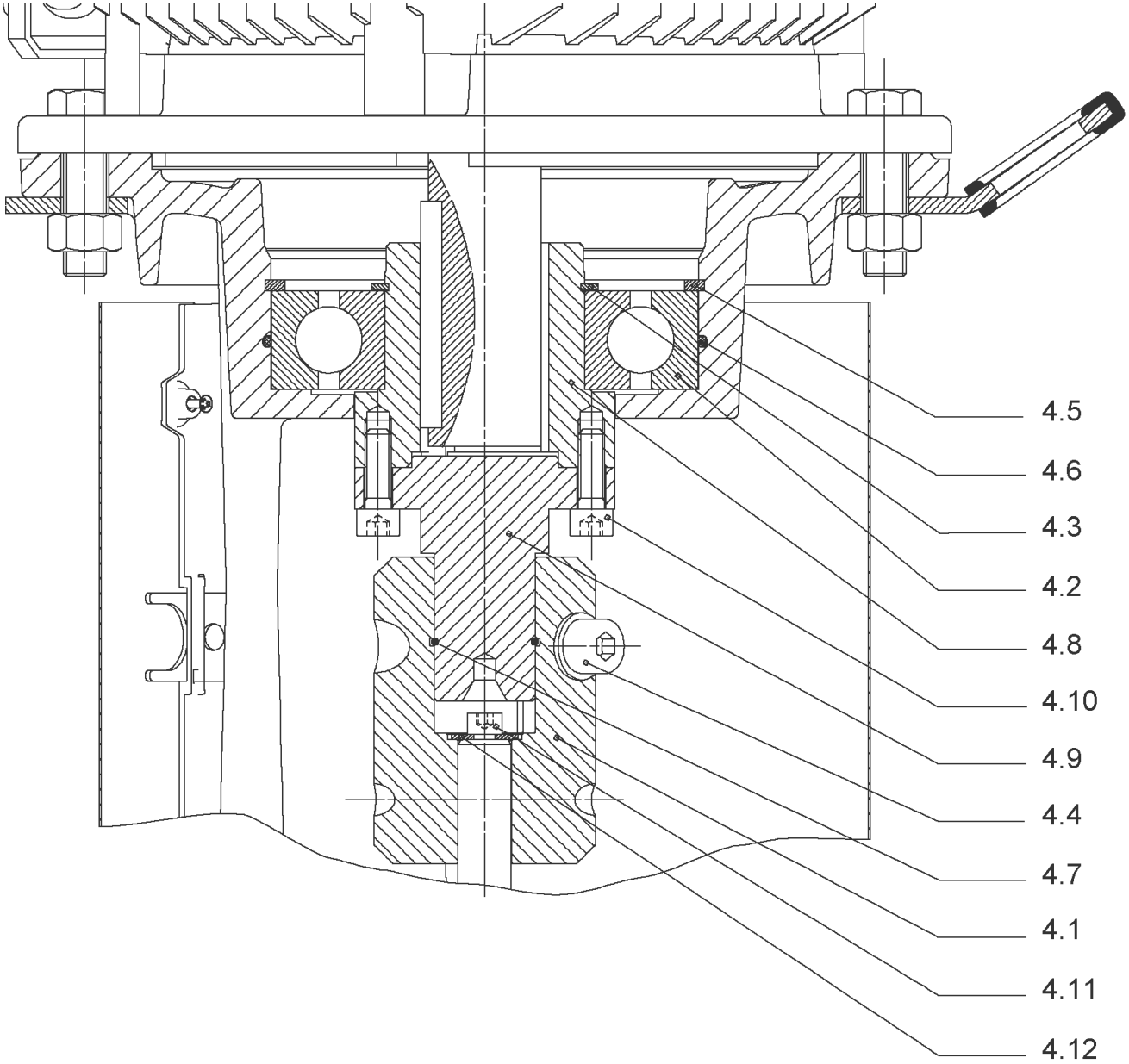

## COUPLING D.20XD.38 FF300 KIT (4143966)

| Item | Article no. | Description | Quantity |
|---|---|---|---|
| 4.1 | 4179590 | COUPLING 2 PARTS D.20XD.38XL115 VP. | 1 |
| 4.2 | 2123699 | BALL BEARING 6312/2Z-C4 (HT) VP. | 1 |
| 4.3 | 63428 | CIRCLIP-FOR-SHAFT-D60x2 | 1 |
| 4.4 | 2130991 | SCREW M12X30 ISO4762 8.8 ZN(4 PIECES) | 1 |
| 4.5 | 4032277 | CIRCLIP-HOLE-130x4 | 1 |
| 4.6 | 4006725 | O-RING ID.132,94x3,53 NBR70SR | 1 |
| 4.7 | 2130992 | RETAINING RING D.35xD.2,5 DIN7993 VP. | 1 |
| 4.8 | 4179591 | HUB D.42xD.60 VP. | 1 |
| 4.9 | 2130994 | SPACER D.38XD.55 VP. | 1 |
| 4.10 | 4094462 | SCREWS M10 ( 4 PIECES ) | 1 |
| 4.11 | 4233959 | SCREW M8x16 VP. | 1 |
| 4.12 | | SERRATED LOCK WASHER Ø8.2XØ25X35X2 | 1 |

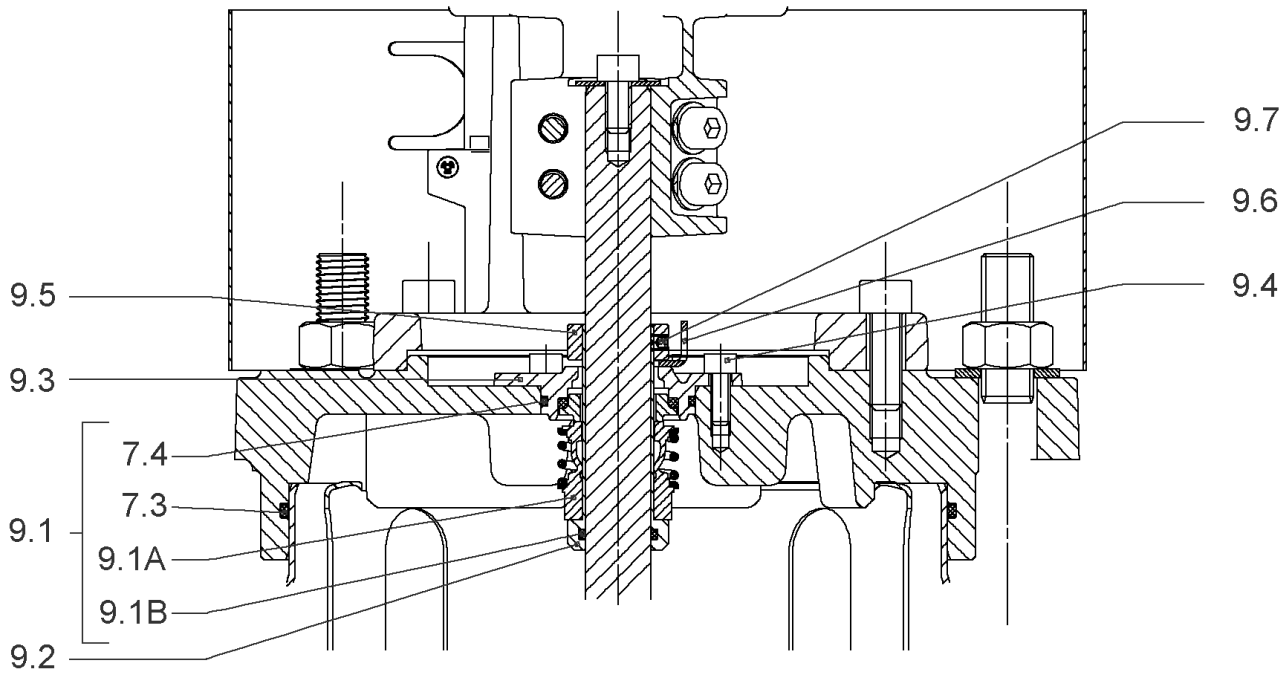
9.7
9.6
9.4
9.5
9.3
7.4
7.3
9.1
9.1A
9.1B
9.2

## CARTRIDGE HELIX22-36-52 O/E KIT (4143973)

| Item | Article no. | Description | Quantity |
|---|---|---|---|
| 9.1 | 4143974 | SEAL-KIT-HELIX22-36-52 O/E | 1 |
| 7.3 | 4179571 | > O-RING HOUSING PIPE HELIX22/36/52 VP. | 1 |
| 7.4 | 4179572 | > O-RING ID.42.52X2.62 EPDM VP. | 1 |
| 9.1A | 4179573 | > M.SEAL.HELIX22-36-52 O/E VP. | 1 |
| 9.1B | 4179574 | > O-RING ID.20x2.65 EPDM VP. | 1 |
| 9.2 | 4179566 | SHAFT SLEEVE D.20/20X60 1.4404 VP. | 1 |
| 9.3 | 4179567 | RING HOLDER Ø22 1.4301 VP. | 1 |
| 9.4 | 4176520 | SCREW CH M5x5 A4-70 ( 3PIECES ) | 1 |
| 9.5 | 4179568 | DRIVE RING D.31/22.1x11 MACH.VP. | 1 |
| 9.6 | 4179569 | TOOL M.S.CART.HELIX 8'' VP. | 1 |
| 9.7 | 4179570 | SCREW M6X16 ISO4762 8.8 GEOMET(4 PIECES) | 1 |

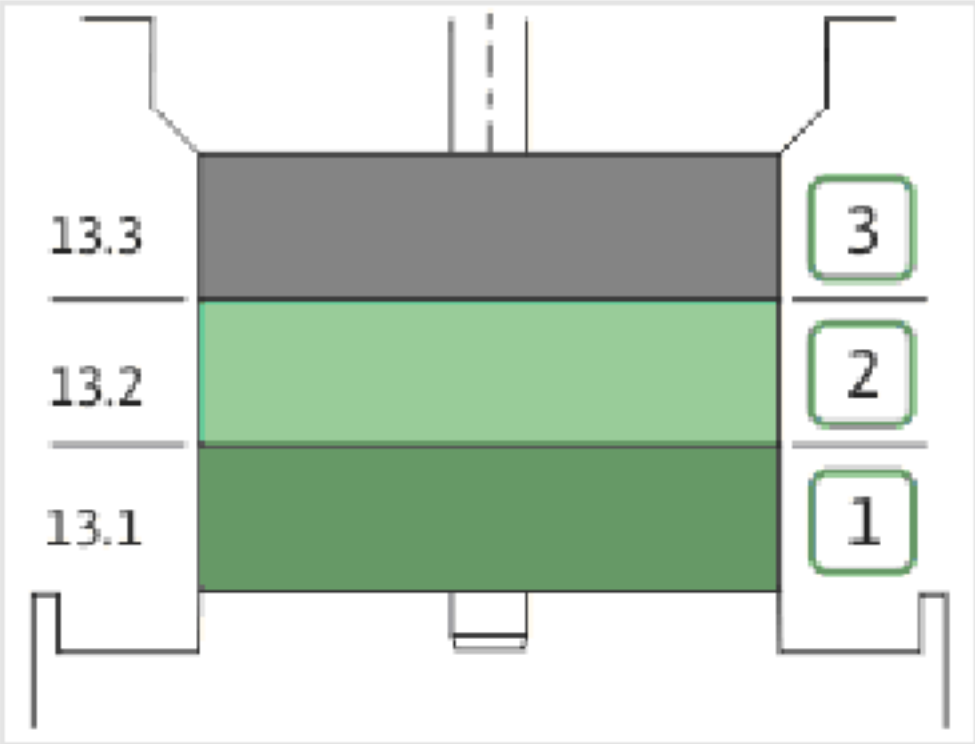
13.3
13.2
13.1
3
2
1

| Item | Article no. | Description | Quantity |
|---|---|---|---|
| 13.1 | 4164727 | INTERMEDIAIRE STAGE HELIX 52 1.4301 KIT | 1 |
| | | > SLEEVE-SPACER-D22XL30,42-316L | 1 |
| | | > MACH.BEARING-DIFFUSER+NR-M+52-304 | 1 |
| | | > SHAFT-SLEEVE-D26xD22x16-CW | 1 |
| | | > SPACER WASHER D22,3XD36 L3-316L | 1 |
| | | > IMPELLER-H2-M+52-304 | 1 |
| 13.1A | 4161200 | > NECK RING 1.STAGE HELIX V36/52 KIT | 1 |
| | | >> NECK-RING-M+36/52 | 1 |
| | | >> HYDRAULIC SUPPORT CAP M+36/52 304 | 1 |
| | | >> SCREW TCL M3X8 A4 POZIDRIV | 1 |
| 13.2 | 4164728 | INTERMEDIATE STAGE HELIX 52 1.4301 KIT | 1 |
| | | > MACH.STD-DIFFUSER+NR-M+52-304 | 1 |
| | | > IMPELLER-H5-M+52-304 | 1 |
| 13.3 | 4164729 | UPPER-STAGE HELIX 52 1.4301 KIT | 1 |
| | | > STOP COLLAR OF IMPELLER L27,6-Ø22-316L | 1 |
| | | > SLEEVE-SPACER-D22XL16,66-316L | 1 |
| | | > SPACER WASHER D22,3XD36 L3-316L | 1 |
| | | > IMPELLER-H2-M+52-304 | 1 |
| | | > MACH.STD-DISCHARGE-CHAMBER-M+52-304 | 1 |

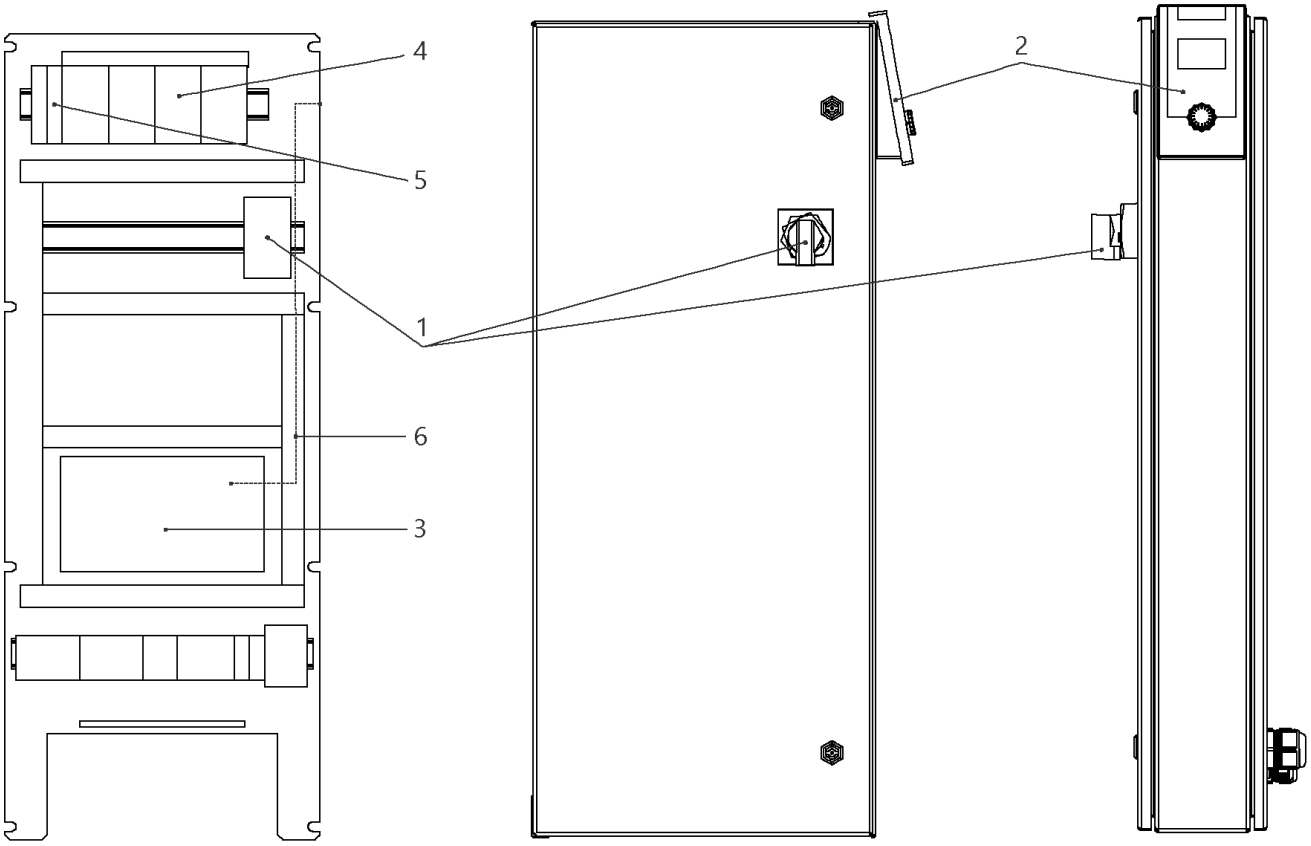
4
5
1
6
3
2

## W-CTRL-SCE-B-2x24A-T34-FM-ND2-AVC-PKG

| Item | Article no. | Description | Quantity |
|---|---|---|---|
| 1 | 2104473 | MAIN SWITCH OT63F3 L105 KIT | 1 |
| 2 | 4184784 | CONTROL PANEL HMI SC KIT | 1 |
| 2 | 4185259 | ASSEMBLY DISPLAY SC PKG VP. | 1 |
| Note: DISPLAY ALONE / PLATINE SEULE | | | |
| 3 | 4185257 | ASSEMBLY CPU SCe Booster VP. | 1 |
| 4 | 2051219 | AUTOM.CIRCUIT BREAKER S203 B32 FOR 15kW | 1 |
| 5 | 2046288 | CIRCUIT BREAKER S201 B16 | 1 |
| 6 | 4194956 | PATCH CABLE RJ45 CAT6 1,0M BLUE SC-PANEL | 1 |

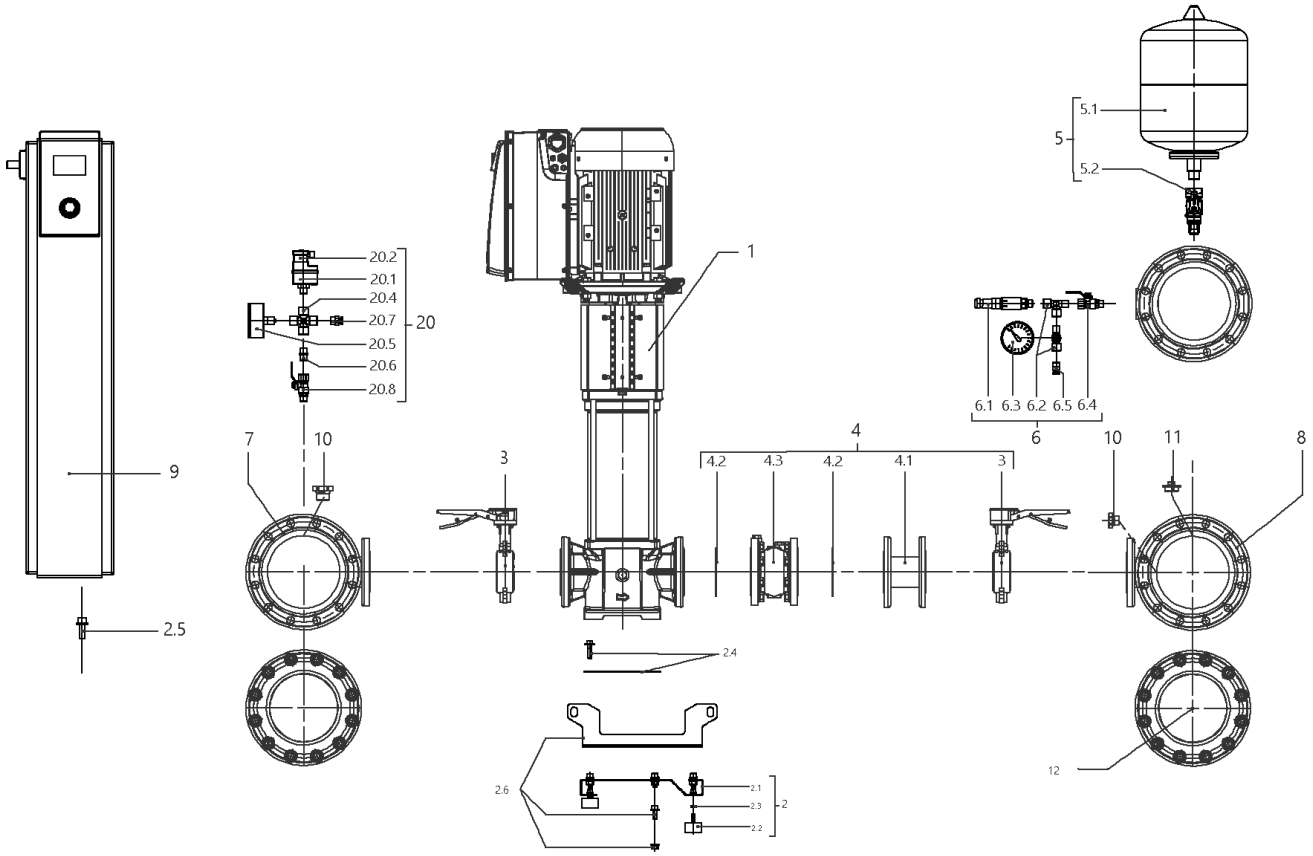
5.1
5
5.2
1
20.2
20.1
20.4
20.7
20
20.5
20.6
20.8
6.1 6.3 6.2 6.5 6.4
6
4
4.2 4.3 4.2 4.1
3
7
10
3
10
11
8
9
2.5
2.4
12
2.6
2.1
2.3
2
2.2

## SiBoost Smart 2HELIX VE5204 (2540927)

| Item | Article no. | Description | Quantity |
|---|---|---|---|
| 1 | | HELIX VE5204-4/16/E/KS/2G | 1 |
| 2 | 4204893 | BASE PLATE DE2 1250x420 M10 KIT | 1 |
| 2.1 | | > BASE_FR_2x22-52V500L400BOX150-250 | 1 |
| 2.2 | 2027881 | > VIBRATION DAMPER M.10X20 D.70 | 1 |
| 2.3 | 2028281 | > NUT M10 DIN936 (ISO4035) 17H VZ | 1 |
| 2.4 | 4204891 | > HOLDER PUMP Siboost Smart V36/52 KIT | 1 |
| 2.5 | 4197084 | > HOLDER SWITCHBOX WILO Smart Control KIT | 1 |
| 2.6 | 4203979 | > LIFTING Siboost HELIX 22/36 KIT | 1 |
| 3 | | BUTTERFLY VALVE 316 DN80 BLACK PS16 | 1 |
| 4 | 4204922 | DELIVERY SIDE Siboost Helix 52 KIT | 1 |
| 3 | | > BUTTERFLY VALVE 316 DN80 BLACK PS16 | 1 |
| 4.1 | | > FLANGE ADAPTER DN80x125 PN16 AISI304 | 1 |
| 4.2 | 2042897 | > GASKET DN80 PN40 DIN2690 | 1 |
| 4.3 | 4205934 | > CHECK-VALVE-FLANGES-PLUG-DN80-PN16-VP. | 1 |
| 5 | 4203983 | DIAPHREM TANK 8L/PN16 DIN4807/T5 KIT | 1 |
| 5.1 | 2045914 | > DIAPHREM TANK 8L TYP-DD 16BAR | 1 |
| 5.2 | 4189350 | > FLOW FITTING G3/4 FOR DIAPHRAG VESSEL VP | 1 |
| 6 | 4197076 | PRESSURE SENSOR/ GAUGE 0-16BAR KIT | 1 |
| 6.1 | 2085909 | > PRESS.SENSOR 1/4" 0-16BAR 4-20MA VP. | 1 |
| 6.2 | 4197077 | > T-PIECE 1/4" VP. | 1 |
| 6.3 | 2028692 | > PRESSURE GAUGE NG63-PN16-G1/4 | 1 |
| 6.4 | 2028291 | > BALL TAP R1/4" PN42 GIACOMINI R254DL | 1 |
| 6.5 | 2028691 | > BLOWGUN 1/4" MS 30BAR VP. | 1 |
| 7 | 4205935 | PIPE DE2 DN125-2xDN80-1x1/4x1000 VP. | 1 |
| 8 | 4205936 | PIPE DE2 DN125-2xDN80+1x1/4+1x3/4x1000 | 1 |
| 9 | | W-CTRL-SCE-B-2x32A-T34-FM-ND2-AVC-PKG | 1 |
| 10 | 4197079 | PLUG G1/4"x10 AISI304 KIT | 1 |
| 11 | 2032654 | PLUG R3/4" MS VIEGA 1751 | 1 |
| 12 | 4203993 | BLIND-FLANGE DN125 PN10/16-A2 KIT | 1 |
| | 4203994 | > FLAT GASKET D.120/162X2 DN125 FIBRE VP. | 1 |
| | 2094573 | > NUT M16 DIN934 A2 1.4301 VP. | 1 |
| | 2107590 | > SCREW M16x70 DIN933 A2 (8 PIECES) | 1 |
| | 2094572 | > WASHER A17 DIN125 A2 1.4301 VP. | 1 |
| | | > FULL FLANGE ST.DN100 PN16 EN1092-1/05 A2 | 1 |

| Item | Article no. | Description | Quantity |
|---|---|---|---|
| | | > FLANGE COVER DN125 DIN 3443 FORM A | 1 |
| 20 | | ASSEMBLY WMS. DE-EB. +VP | 1 |
| 20.1 | 2028652 | > PRESSURE SWITCH PS3-ASR 1/(1,3) VP. | 1 |
| 20.2 | 2130983 | > PLUG PS3-415 WITH KABEL 1,5M 2NO VP. | 1 |
| 20.4 | 2028290 | > CROSSPIECE R1/4" MS-NICKEL | 1 |
| 20.5 | 2028687 | > PRESSURE GAUGE NG63 R1/4" HI.0-6BAR | 1 |
| 20.6 | 2054268 | > DUAL NIPPLE G1/4" x G1/4" MS VP. | 1 |
| 20.7 | 2028691 | > BLOWGUN 1/4" MS 30BAR VP. | 1 |
| 20.8 | 2028291 | > BALL TAP R1/4" PN42 GIACOMINI R254DL | 1 |

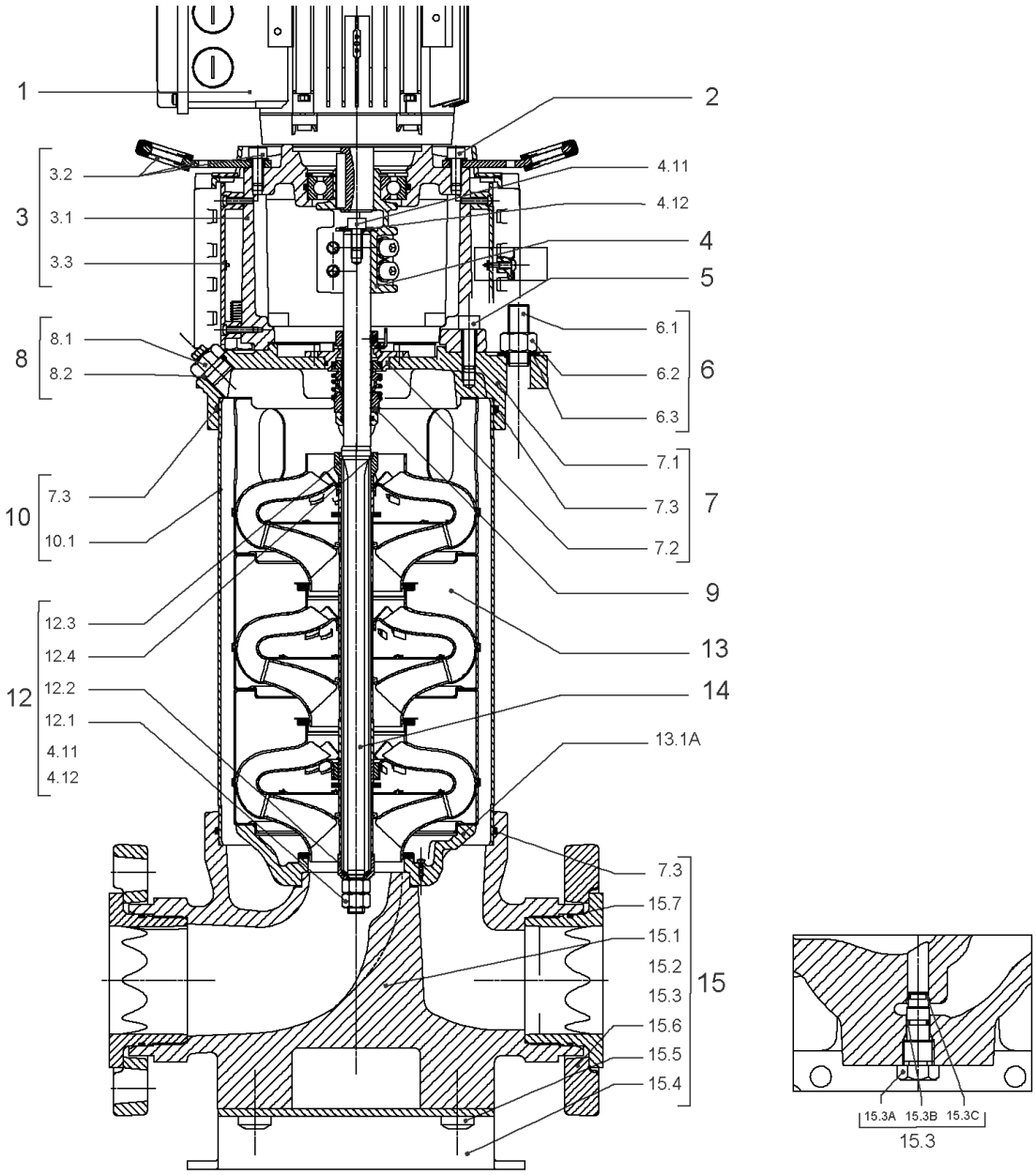
1
2
3
3.2
3.1
3.3
4.11
4.12
4
5
8
8.1
8.2
6.1
6.2
6.3
6
7.1
7.3
7.2
7
10
7.3
10.1
9
12
12.3
12.4
12.2
12.1
4.11
4.12
13
14
13.1A
7.3
15.7
15.1
15.2
15.3
15.6
15.5
15.4
15
15.3A
15.3B
15.3C
15.3

| Item | Article no. | Description | Quantity |
|---|---|---|---|
| 1 | | DRIVE HELIX VE5204-IE2-ARC KIT | 1 |
| Note: no longer available/nicht mehrlieferbar/n'est plus disponible | | | |
| 1 | 4218533 | DRIVE HELIX VE5204-IE4-WEG KIT | 1 |
| Note: MOTOR BRAND WEG | | | |
| 2 | 4179586 | SCREW M16X60 (4 PIECES) | 1 |
| 3 | 4157721 | LANTERN HELIX 22/36 FF300 BB6312 KIT | 1 |
| 3.1 | | > LANTERN FF300 M+ GJL MACHINED+CATA 6312 | 1 |
| 3.2 | 4179589 | > EYELET CPL.FF300 HELIX(4 PIECES) | 1 |
| 3.3 | 4143969 | > COUPLING PROTECT HELIX FF KIT | 1 |
| 4 | 4143966 | COUPLING D.20XD.38 FF300 KIT | 1 |
| 5 | 4157725 | SCREW M10X40 (4 PIECES) | 1 |
| 6 | 4179919 | STUD BOLT M16X500 KIT | 1 |
| 6.1 | | > TIE BOLT M16-500x24x44-1.4057 | 1 |
| 6.2 | 4179562 | > NUT M16 8.8 ISO4032 (4 PIECES) | 1 |
| 6.3 | 4097852 | > WASHER-CS-16.4-32-2.8-NFE25-511-A2 | 1 |
| 7 | 4179565 | END SHIELD HELIX 8'' EPDM KIT | 1 |
| 7.1 | | > END SHIELD M+ GJL MACHINED+CATA | 1 |
| 7.2 | 4179564 | > O-RING D.42.52x2.62 EPDM VP. | 1 |
| 7.3 | 4179571 | > O-RING HOUSING PIPE HELIX22/36/52 VP. | 1 |
| 8 | 4186377 | FILING/PURGING PLUG 304 HELIX KIT | 1 |
| 8.1 | | > FILLING/VENTING-PLUG-MVI8/10"-304 | 1 |
| 8.2 | 4032291 | > O-RING 17x3 EPDM KTW/WRC | 1 |
| 9 | 4143973 | CARTRIDGE HELIX22-36-52 O/E KIT | 1 |
| 10 | 4179920 | HOUSING PIPE D204 X 430 1.4301 KIT | 1 |
| 7.3 | 4179571 | > O-RING HOUSING PIPE HELIX22/36/52 VP. | 1 |
| 10.1 | | > HOUSING-PIPE Ø204-M+5204-304 | 1 |
| 11 | 4179583 | CENTRALIZER HELIX 8'' 52 VP. | 1 |
| 12 | 4164724 | SHAFT EQUIPMENT HELIX V52 KIT | 1 |
| 13 | | HYDRAULIC HELIX V 5204 | 1 |
| 14 | 4180848 | SHAFT D.22X604 1.4057 VP. | 1 |
| 15 | 4186388 | EQUIPED HOUSING HELIX FIRST DN80 DWA KIT | 1 |
| 15.1 | | > PUMP CASING MONO.GJL M+8" DN80 DWA | 1 |
| 15.2 | | > HYD.SUP.M+8" ONE PIECE HOUSING N80 DWA | 1 |
| 15.3 | 4106048 | > DRAIN/PRIMING PLUG EPDM HELIX FIRST KIT | 1 |

| Item | Article no. | Description | Quantity |
|---|---|---|---|
| 15.3A | | >> DRAIN AND PRIMING PLUG-VMI10"-304 | 1 |
| 15.3B | 4032293 | >> O-RING-10x3-EPDM-KTW/WRC | 1 |
| 15.3C | 4233957 | >> O-RING ID.9 EPDM VP. | 1 |
| 7.3 | 4179571 | > O-RING HOUSING PIPE HELIX22/36/52 VP. | 1 |
| 13.1A | 4161200 | > NECK RING 1.STAGE HELIX V36/52 KIT | 1 |
| | | >> NECK-RING-M+36/52 | 1 |
| | | >> HYDRAULIC SUPPORT CAP M+36/52 304 | 1 |
| | | >> SCREW TCL M3X8 A4 POZIDRIV | 1 |

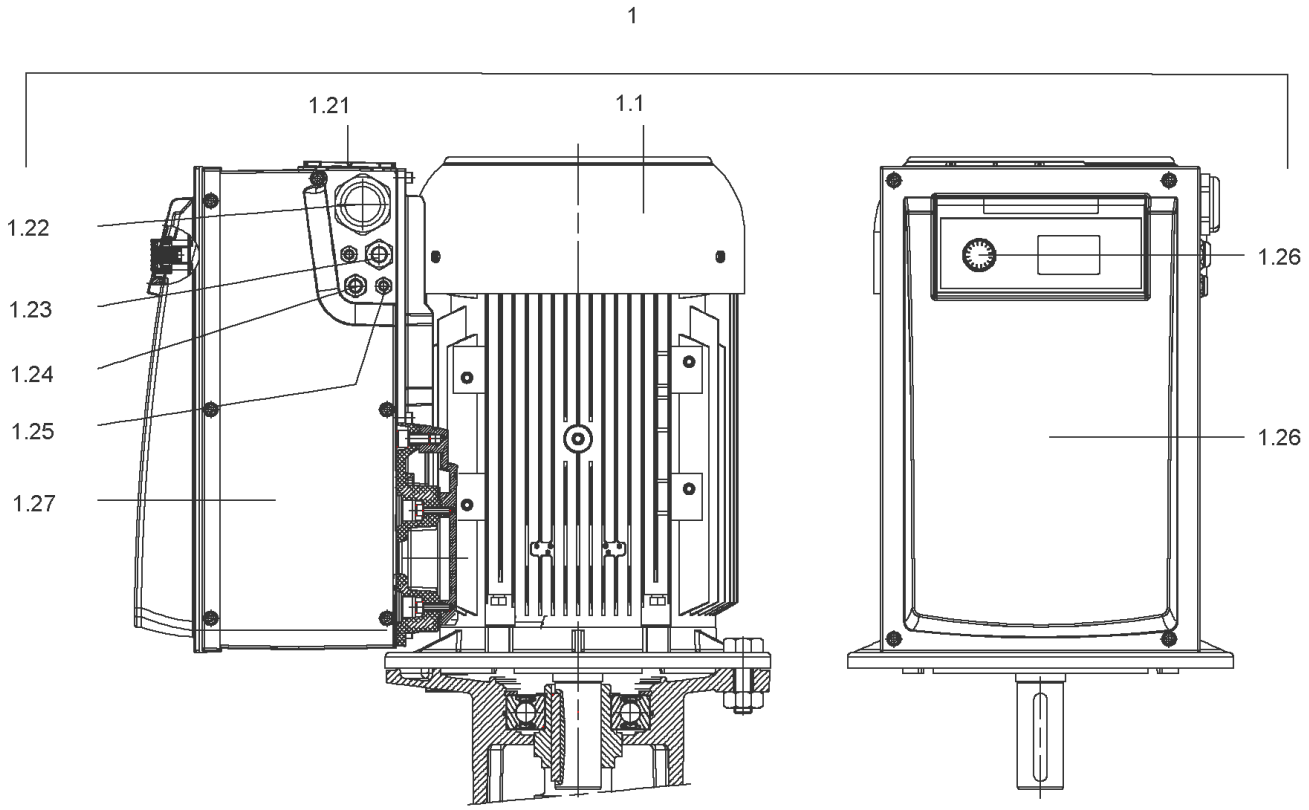
1
1.21
1.1
1.22
1.23
1.24
1.25
1.27
1.26
1.26

## DRIVE HELIX VE5204-IE2-ARC KIT

| Item | Article no. | Description | Quantity |
|---|---|---|---|
| 1.1 | | M15-2T540P55V1-160F300-N42-IE2 | 1 |
| | | SPARE PARTS MOTOR:ON REQUEST | 1 |
| 1.21 | 2132102 | FAN SMALL TL6/7 FF KIT | 1 |
| 1.25 | 2132097 | CABLE CONNECTION M12 TL6/7 FF VP. | 1 |
| 1.24 | 2132098 | CABLE CONNECTION M16 TL6/7 FF VP. | 1 |
| 1.23 | 2132099 | CABLE CONNECTION M20 TL6/7 FF VP. | 1 |
| 1.22 | 2132100 | CABLE CONNECTION SMALL M40 TL6/7 FF VP. | 1 |
| 1.27 | 2132104 | COVER SIDE TL6/7 FF CPL.VP. | 1 |
| 1.26 | 2132452 | MODULE COVER/BUTTON TL6/7 FF VP. | 1 |

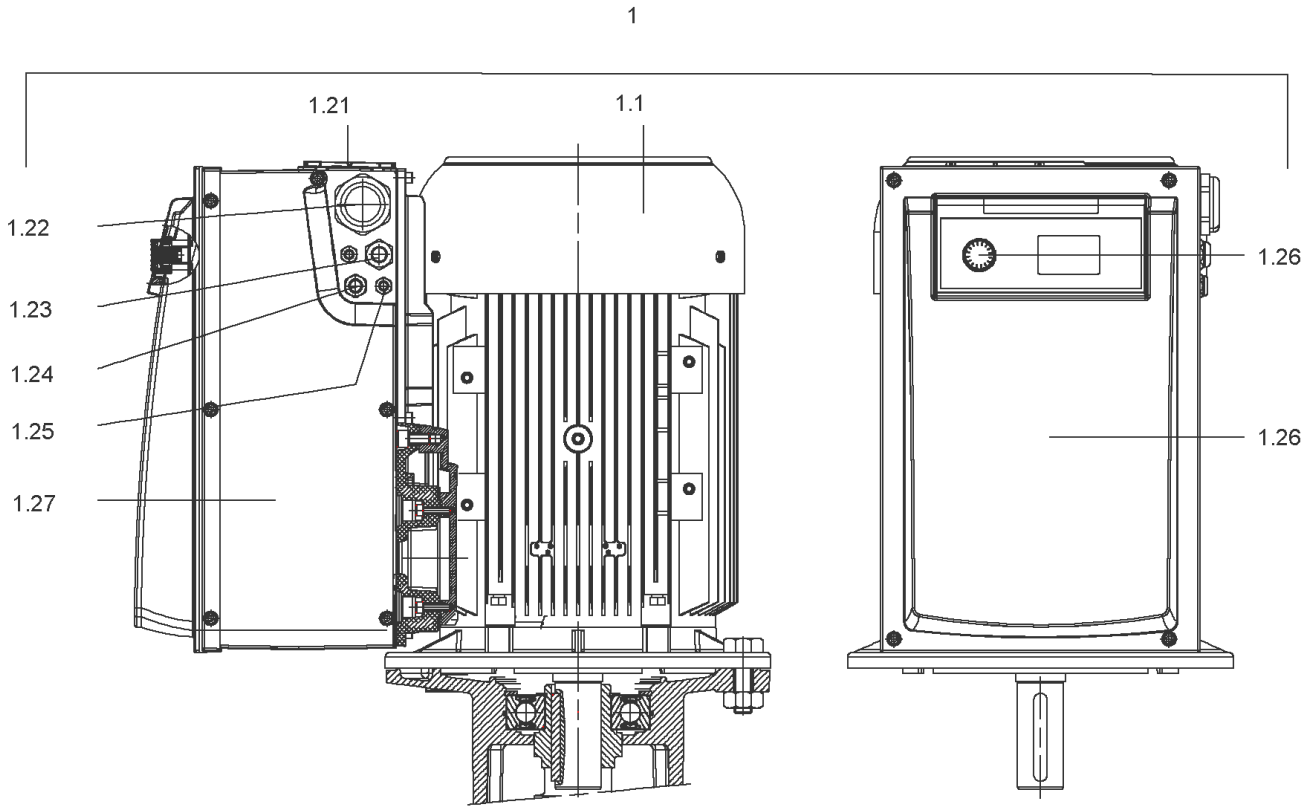
1
1.21
1.1
1.22
1.23
1.24
1.25
1.27
1.26
1.26

## DRIVE HELIX VE5204-IE4-WEG KIT (4218533)

| Item | Article no. | Description | Quantity |
|---|---|---|---|
| 1.1 | | M15-2T540P55V1-160F30-N42-ADAPT-IE4-WEG | 1 |
| | | SPARE PARTS MOTOR:ON REQUEST | 1 |
| 1.21 | 2132102 | FAN SMALL TL6/7 FF KIT | 1 |
| 1.25 | 2132097 | CABLE CONNECTION M12 TL6/7 FF VP. | 1 |
| 1.24 | 2132098 | CABLE CONNECTION M16 TL6/7 FF VP. | 1 |
| 1.23 | 2132099 | CABLE CONNECTION M20 TL6/7 FF VP. | 1 |
| 1.22 | 2132100 | CABLE CONNECTION SMALL M40 TL6/7 FF VP. | 1 |
| 1.27 | 2132104 | COVER SIDE TL6/7 FF CPL.VP. | 1 |
| 1.26 | 2132452 | MODULE COVER/BUTTON TL6/7 FF VP. | 1 |

## COUPLING D.20XD.38 FF300 KIT (4143966)

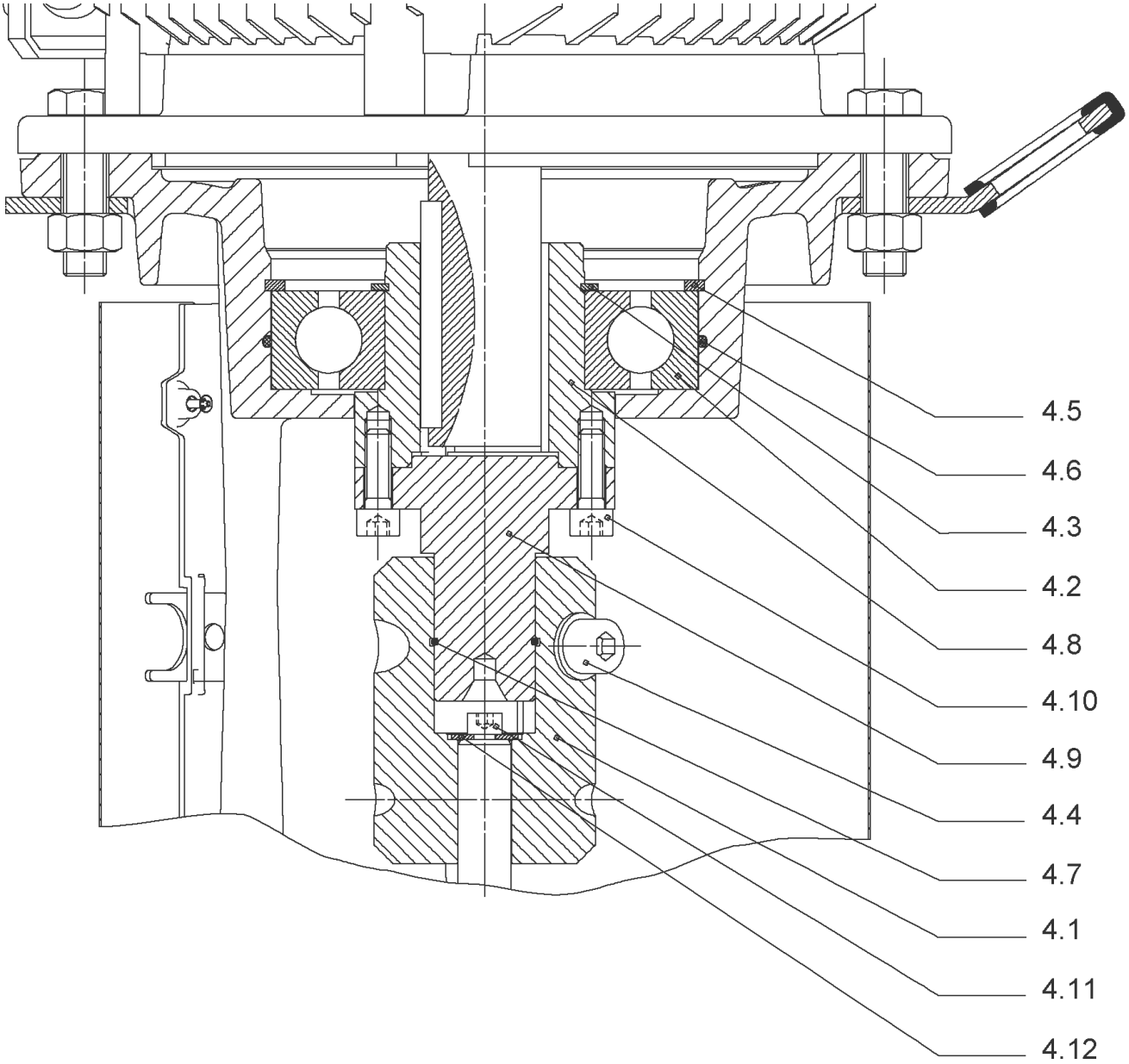

## COUPLING D.20XD.38 FF300 KIT (4143966)

| Item | Article no. | Description | Quantity |
|---|---|---|---|
| 4.1 | 4179590 | COUPLING 2 PARTS D.20XD.38XL115 VP. | 1 |
| 4.2 | 2123699 | BALL BEARING 6312/2Z-C4 (HT) VP. | 1 |
| 4.3 | 63428 | CIRCLIP-FOR-SHAFT-D60x2 | 1 |
| 4.4 | 2130991 | SCREW M12X30 ISO4762 8.8 ZN(4 PIECES) | 1 |
| 4.5 | 4032277 | CIRCLIP-HOLE-130x4 | 1 |
| 4.6 | 4006725 | O-RING ID.132,94x3,53 NBR70SR | 1 |
| 4.7 | 2130992 | RETAINING RING D.35xD.2,5 DIN7993 VP. | 1 |
| 4.8 | 4179591 | HUB D.42xD.60 VP. | 1 |
| 4.9 | 2130994 | SPACER D.38XD.55 VP. | 1 |
| 4.10 | 4094462 | SCREWS M10 ( 4 PIECES ) | 1 |
| 4.11 | 4233959 | SCREW M8x16 VP. | 1 |
| 4.12 | | SERRATED LOCK WASHER Ø8.2XØ25X35X2 | 1 |

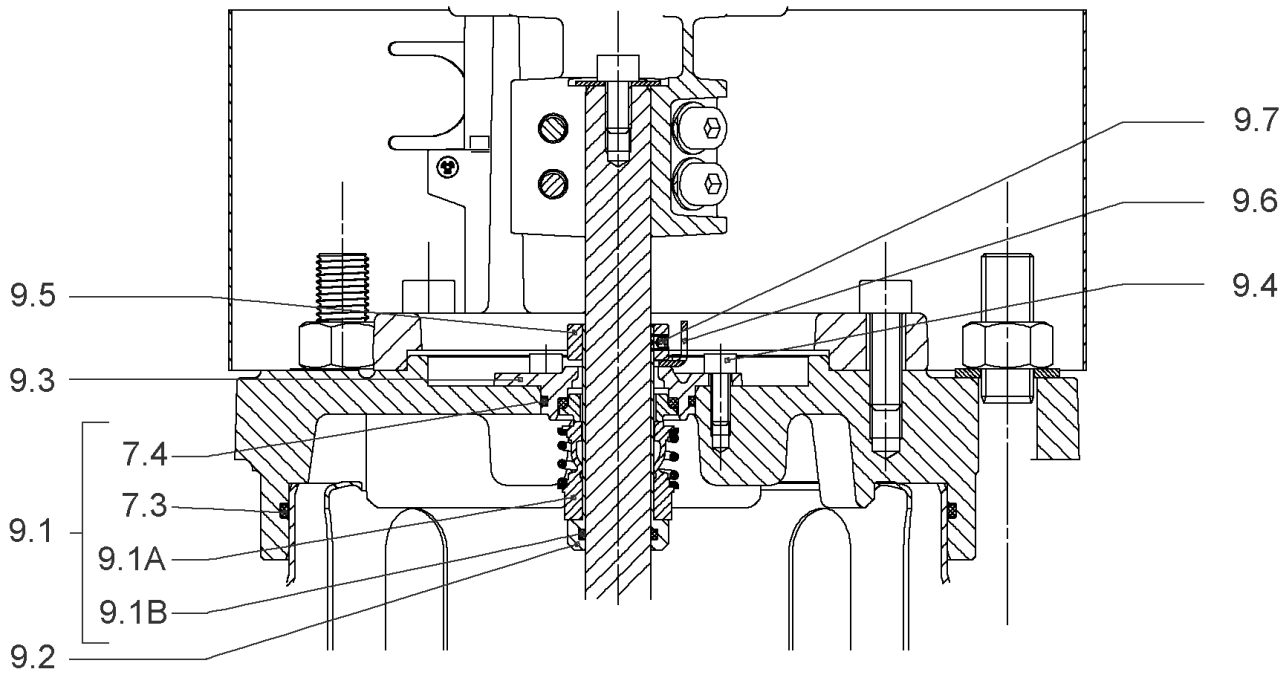
9.7
9.6
9.4
9.5
9.3
7.4
7.3
9.1
9.1A
9.1B
9.2

## CARTRIDGE HELIX22-36-52 O/E KIT (4143973)

| Item | Article no. | Description | Quantity |
|---|---|---|---|
| 9.1 | 4143974 | SEAL-KIT-HELIX22-36-52 O/E | 1 |
| 7.3 | 4179571 | > O-RING HOUSING PIPE HELIX22/36/52 VP. | 1 |
| 7.4 | 4179572 | > O-RING ID.42.52X2.62 EPDM VP. | 1 |
| 9.1A | 4179573 | > M.SEAL.HELIX22-36-52 O/E VP. | 1 |
| 9.1B | 4179574 | > O-RING ID.20x2.65 EPDM VP. | 1 |
| 9.2 | 4179566 | SHAFT SLEEVE D.20/20X60 1.4404 VP. | 1 |
| 9.3 | 4179567 | RING HOLDER Ø22 1.4301 VP. | 1 |
| 9.4 | 4176520 | SCREW CH M5x5 A4-70 ( 3PIECES ) | 1 |
| 9.5 | 4179568 | DRIVE RING D.31/22.1x11 MACH.VP. | 1 |
| 9.6 | 4179569 | TOOL M.S.CART.HELIX 8'' VP. | 1 |
| 9.7 | 4179570 | SCREW M6X16 ISO4762 8.8 GEOMET(4 PIECES) | 1 |

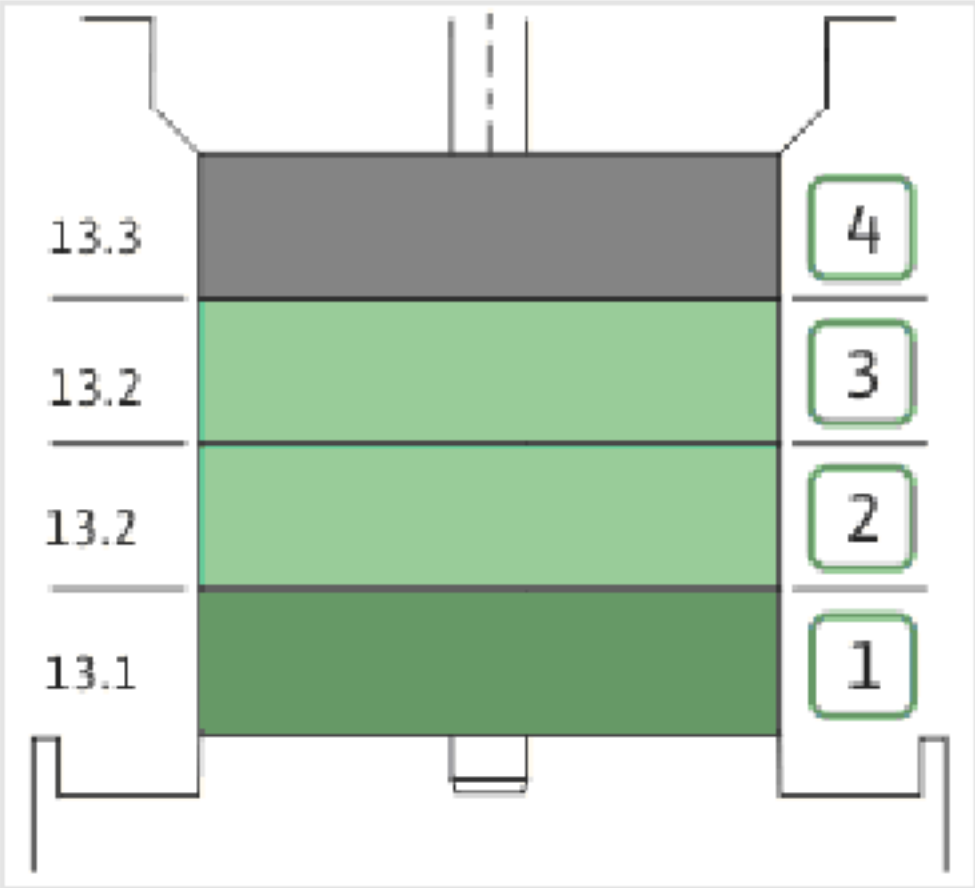
13.3
13.2
13.2
13.1
4
3
2
1

| Item | Article no. | Description | Quantity |
|---|---|---|---|
| 13.1 | 4164727 | INTERMEDIAIRE STAGE HELIX 52 1.4301 KIT | 1 |
| | | > SLEEVE-SPACER-D22XL30,42-316L | 1 |
| | | > MACH.BEARING-DIFFUSER+NR-M+52-304 | 1 |
| | | > SHAFT-SLEEVE-D26xD22x16-CW | 1 |
| | | > SPACER WASHER D22,3XD36 L3-316L | 1 |
| | | > IMPELLER-H2-M+52-304 | 1 |
| 13.1A | 4161200 | > NECK RING 1.STAGE HELIX V36/52 KIT | 1 |
| | | >> NECK-RING-M+36/52 | 1 |
| | | >> HYDRAULIC SUPPORT CAP M+36/52 304 | 1 |
| | | >> SCREW TCL M3X8 A4 POZIDRIV | 1 |
| 13.2 | 4164728 | INTERMEDIATE STAGE HELIX 52 1.4301 KIT | 1 |
| | | > MACH.STD-DIFFUSER+NR-M+52-304 | 1 |
| | | > IMPELLER-H5-M+52-304 | 1 |
| 13.3 | 4164729 | UPPER-STAGE HELIX 52 1.4301 KIT | 1 |
| | | > STOP COLLAR OF IMPELLER L27,6-Ø22-316L | 1 |
| | | > SLEEVE-SPACER-D22XL16,66-316L | 1 |
| | | > SPACER WASHER D22,3XD36 L3-316L | 1 |
| | | > IMPELLER-H2-M+52-304 | 1 |
| | | > MACH.STD-DISCHARGE-CHAMBER-M+52-304 | 1 |

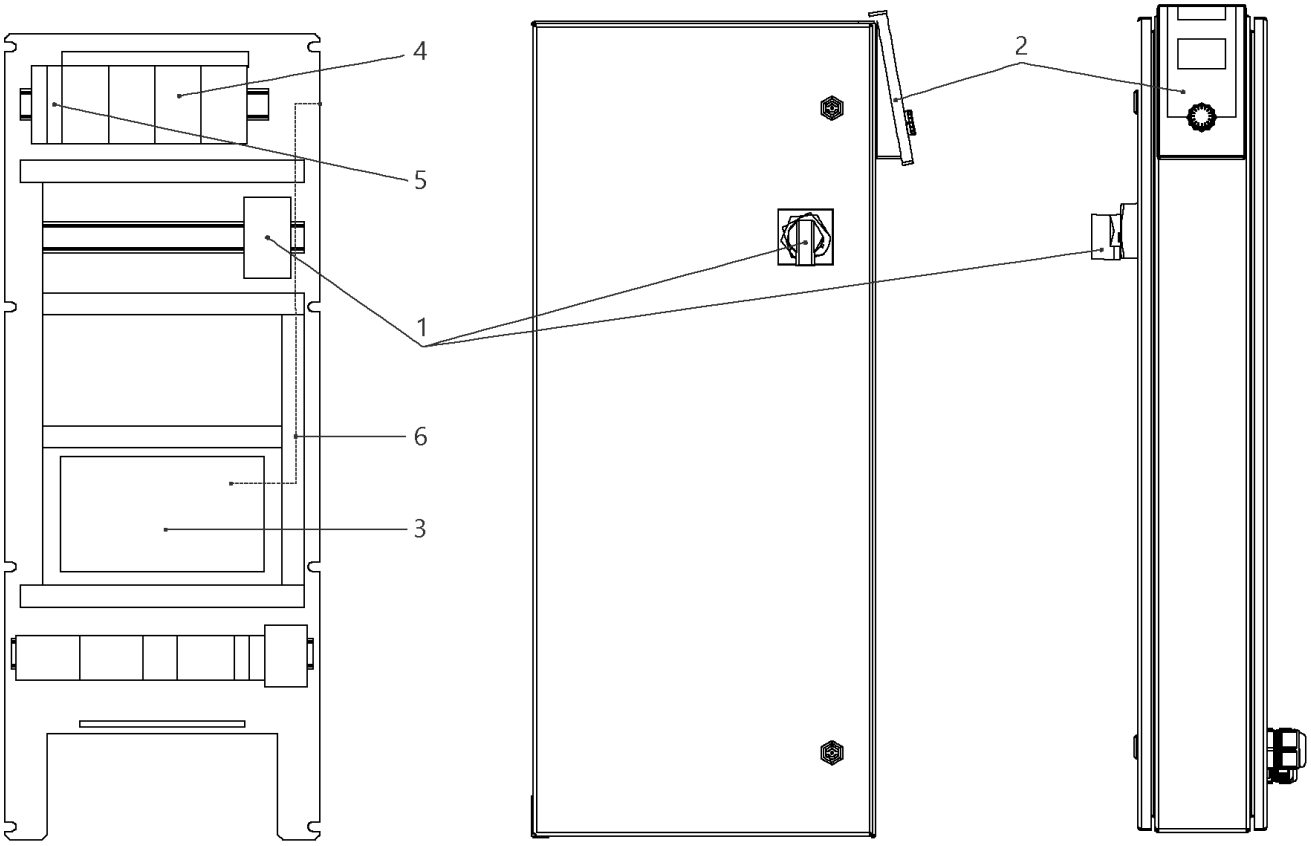
4
5
1
6
3
2

## W-CTRL-SCE-B-2x32A-T34-FM-ND2-AVC-PKG

| Item | Article no. | Description | Quantity |
|---|---|---|---|
| 1 | 2104477 | MAIN SWITCH OT80F3 L105 KIT | 1 |
| 2 | 4184784 | CONTROL PANEL HMI SC KIT | 1 |
| 2 | 4185259 | ASSEMBLY DISPLAY SC PKG VP. | 1 |
| Note: DISPLAY ALONE / PLATINE SEULE | | | |
| 3 | 4185257 | ASSEMBLY CPU SCe Booster VP. | 1 |
| 4 | 2051220 | AUTOM.CIRCUIT BREAKER S203 B40 FOR18,5kW | 1 |
| 5 | 2046288 | CIRCUIT BREAKER S201 B16 | 1 |
| 6 | 4194956 | PATCH CABLE RJ45 CAT6 1,0M BLUE SC-PANEL | 1 |

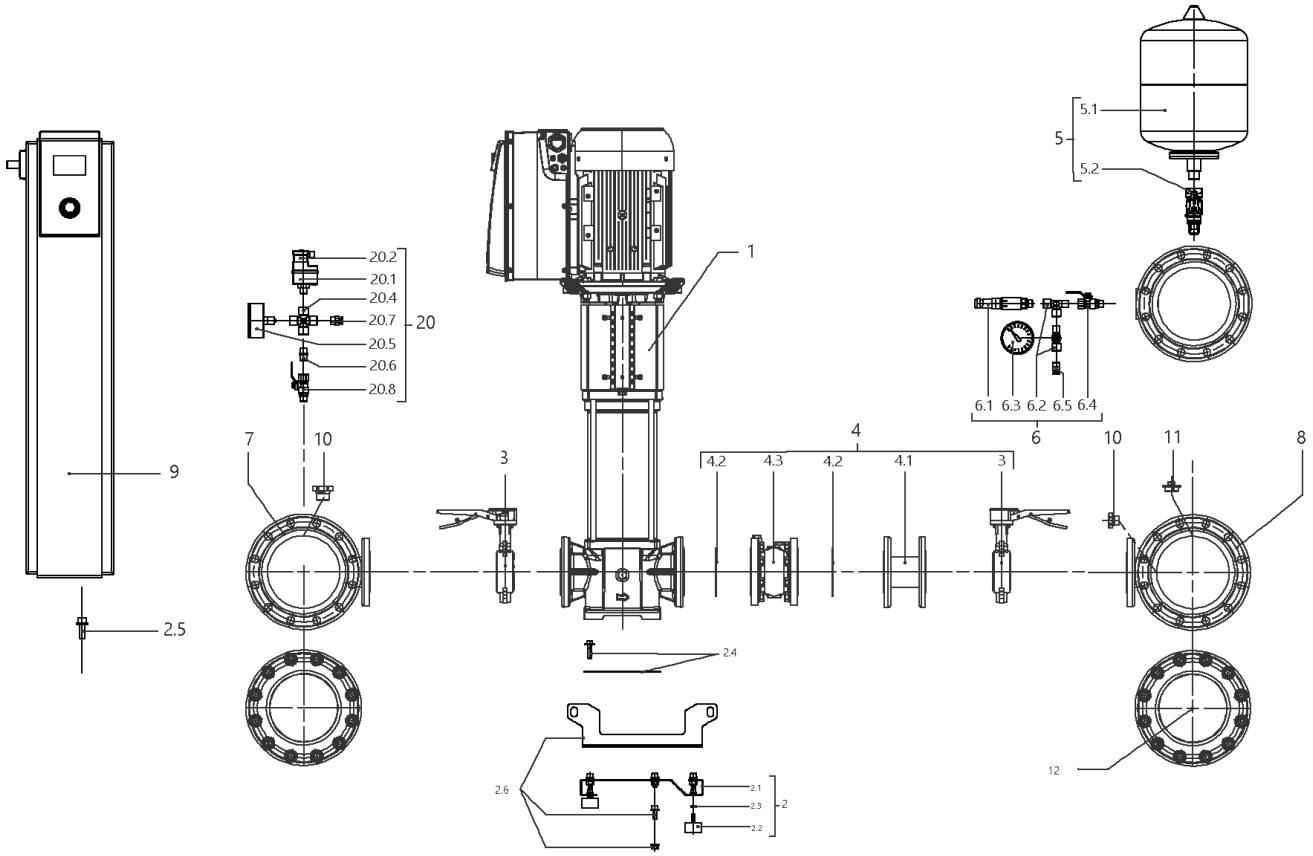
5.1
5
5.2
1
20.2
20.1
20.4
20.7
20
20.5
20.6
20.8
6.1 6.3 6.2 6.5 6.4
6
4
4.2 4.3 4.2 4.1
3
7
10
3
10
11
8
9
2.5
2.4
12
2.6
2.1
2.3
2
2.2

## SiBoost Smart 2HELIX VE5205 (2540928)

| Item | Article no. | Description | Quantity |
|---|---|---|---|
| 1 | | HELIX VE5205-4/16/E/KS/2G | 1 |
| 2 | 4204893 | BASE PLATE DE2 1250x420 M10 KIT | 1 |
| 2.1 | | > BASE_FR_2x22-52V500L400BOX150-250 | 1 |
| 2.2 | 2027881 | > VIBRATION DAMPER M.10X20 D.70 | 1 |
| 2.3 | 2028281 | > NUT M10 DIN936 (ISO4035) 17H VZ | 1 |
| 2.4 | 4204891 | > HOLDER PUMP Siboost Smart V36/52 KIT | 1 |
| 2.5 | 4197084 | > HOLDER SWITCHBOX WILO Smart Control KIT | 1 |
| 2.6 | 4203979 | > LIFTING Siboost HELIX 22/36 KIT | 1 |
| 3 | | BUTTERFLY VALVE 316 DN80 BLACK PS16 | 1 |
| 4 | 4204922 | DELIVERY SIDE Siboost Helix 52 KIT | 1 |
| 3 | | > BUTTERFLY VALVE 316 DN80 BLACK PS16 | 1 |
| 4.1 | | > FLANGE ADAPTER DN80x125 PN16 AISI304 | 1 |
| 4.2 | 2042897 | > GASKET DN80 PN40 DIN2690 | 1 |
| 4.3 | 4205934 | > CHECK-VALVE-FLANGES-PLUG-DN80-PN16-VP. | 1 |
| 5 | 4203983 | DIAPHREM TANK 8L/PN16 DIN4807/T5 KIT | 1 |
| 5.1 | 2045914 | > DIAPHREM TANK 8L TYP-DD 16BAR | 1 |
| 5.2 | 4189350 | > FLOW FITTING G3/4 FOR DIAPHRAG VESSEL VP | 1 |
| 6 | 4197076 | PRESSURE SENSOR/ GAUGE 0-16BAR KIT | 1 |
| 6.1 | 2085909 | > PRESS.SENSOR 1/4" 0-16BAR 4-20MA VP. | 1 |
| 6.2 | 4197077 | > T-PIECE 1/4" VP. | 1 |
| 6.3 | 2028692 | > PRESSURE GAUGE NG63-PN16-G1/4 | 1 |
| 6.4 | 2028291 | > BALL TAP R1/4" PN42 GIACOMINI R254DL | 1 |
| 6.5 | 2028691 | > BLOWGUN 1/4" MS 30BAR VP. | 1 |
| 7 | 4205935 | PIPE DE2 DN125-2xDN80-1x1/4x1000 VP. | 1 |
| 8 | 4205936 | PIPE DE2 DN125-2xDN80+1x1/4+1x3/4x1000 | 1 |
| 9 | | W-CTRL-SCE-B-2x37,5A-T34-FM-ND2-AVC-PKG | 1 |
| 10 | 4197079 | PLUG G1/4"x10 AISI304 KIT | 1 |
| 11 | 2032654 | PLUG R3/4" MS VIEGA 1751 | 1 |
| 12 | 4203993 | BLIND-FLANGE DN125 PN10/16-A2 KIT | 1 |
| | 4203994 | > FLAT GASKET D.120/162X2 DN125 FIBRE VP. | 1 |
| | 2094573 | > NUT M16 DIN934 A2 1.4301 VP. | 1 |
| | 2107590 | > SCREW M16x70 DIN933 A2 (8 PIECES) | 1 |
| | 2094572 | > WASHER A17 DIN125 A2 1.4301 VP. | 1 |
| | | > FULL FLANGE ST.DN100 PN16 EN1092-1/05 A2 | 1 |

| Item | Article no. | Description | Quantity |
|---|---|---|---|
| | | > FLANGE COVER DN125 DIN 3443 FORM A | 1 |
| 20 | | ASSEMBLY WMS. DE-EB. +VP | 1 |
| 20.1 | 2028652 | > PRESSURE SWITCH PS3-ASR 1/(1,3) VP. | 1 |
| 20.2 | 2130983 | > PLUG PS3-415 WITH KABEL 1,5M 2NO VP. | 1 |
| 20.4 | 2028290 | > CROSSPIECE R1/4" MS-NICKEL | 1 |
| 20.5 | 2028687 | > PRESSURE GAUGE NG63 R1/4" HI.0-6BAR | 1 |
| 20.6 | 2054268 | > DUAL NIPPLE G1/4" x G1/4" MS VP. | 1 |
| 20.7 | 2028691 | > BLOWGUN 1/4" MS 30BAR VP. | 1 |
| 20.8 | 2028291 | > BALL TAP R1/4" PN42 GIACOMINI R254DL | 1 |

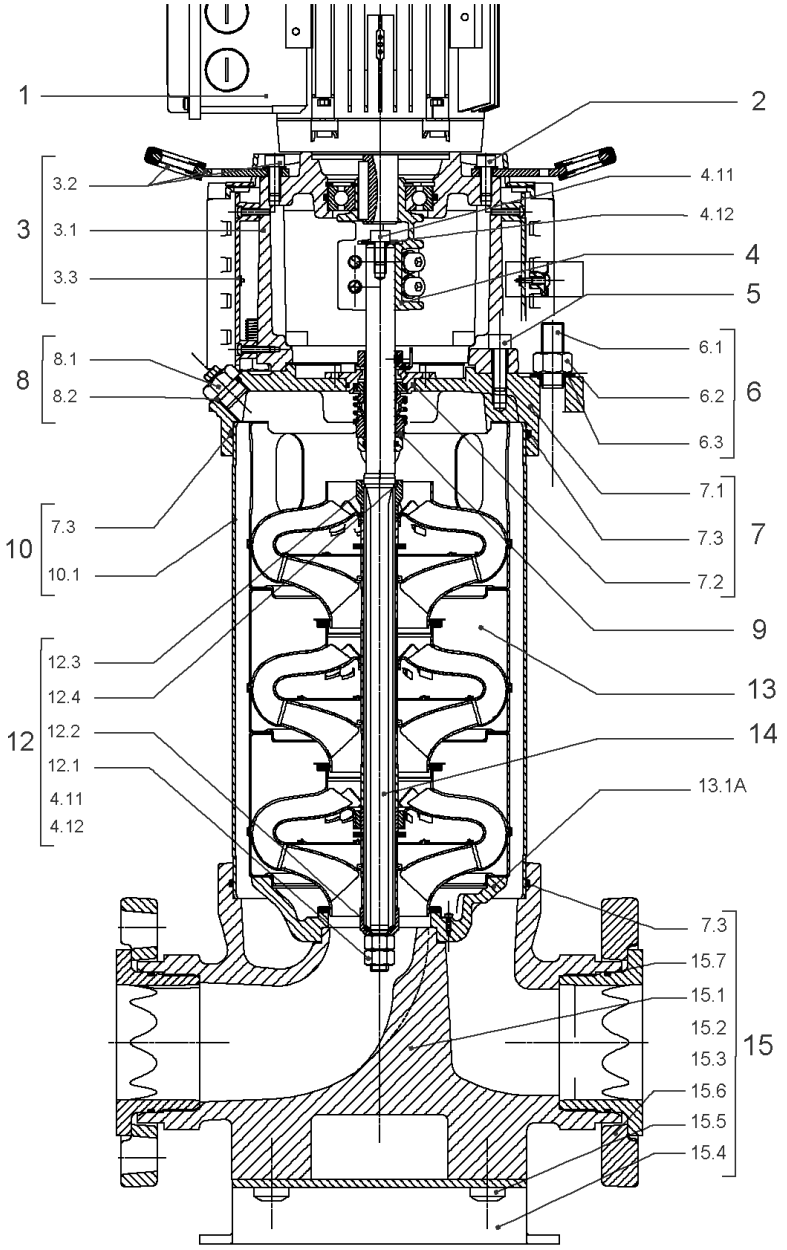
1
2
3
3.2
3.1
3.3
4.11
4.12
4
5
8
8.1
8.2
6.1
6.2
6.3
6
7.1
7.3
7.2
7
10
7.3
10.1
9
12
12.3
12.4
12.2
12.1
4.11
4.12
13
14
13.1A
7.3
15.7
15.1
15.2
15.3
15.6
15.5
15.4
15

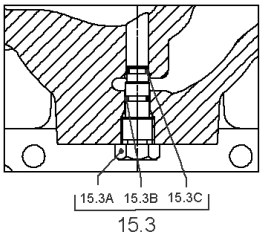
15.3A
15.3B
15.3C
15.3

| Item | Article no. | Description | Quantity |
|---|---|---|---|
| 1 | | DRIVE HELIX VE5205-IE2-ARC KIT | 1 |
| Note: no longer available/nicht mehrlieferbar/n'est plus disponible | | | |
| 1 | 4213695 | DRIVE HELIX VE5205-IE4-WEG KIT | 1 |
| Note: MOTOR BRAND WEG | | | |
| 2 | 4179586 | SCREW M16X60 (4 PIECES) | 1 |
| 3 | 4157721 | LANTERN HELIX 22/36 FF300 BB6312 KIT | 1 |
| 3.1 | | > LANTERN FF300 M+ GJL MACHINED+CATA 6312 | 1 |
| 3.2 | 4179589 | > EYELET CPL.FF300 HELIX(4 PIECES) | 1 |
| 3.3 | 4143969 | > COUPLING PROTECT HELIX FF KIT | 1 |
| 4 | 4143966 | COUPLING D.20XD.38 FF300 KIT | 1 |
| 5 | 4157725 | SCREW M10X40 (4 PIECES) | 1 |
| 6 | 4179923 | STUD BOLT M16X600 KIT | 1 |
| 6.1 | | > TIE BOLT M16-600x24x44-1.4057 | 1 |
| 6.2 | 4179562 | > NUT M16 8.8 ISO4032 (4 PIECES) | 1 |
| 6.3 | 4097852 | > WASHER-CS-16.4-32-2.8-NFE25-511-A2 | 1 |
| 7 | 4179565 | END SHIELD HELIX 8'' EPDM KIT | 1 |
| 7.1 | | > END SHIELD M+ GJL MACHINED+CATA | 1 |
| 7.2 | 4179564 | > O-RING D.42.52x2.62 EPDM VP. | 1 |
| 7.3 | 4179571 | > O-RING HOUSING PIPE HELIX22/36/52 VP. | 1 |
| 8 | 4186377 | FILING/PURGING PLUG 304 HELIX KIT | 1 |
| 8.1 | | > FILLING/VENTING-PLUG-MVI8/10"-304 | 1 |
| 8.2 | 4032291 | > O-RING 17x3 EPDM KTW/WRC | 1 |
| 9 | 4143973 | CARTRIDGE HELIX22-36-52 O/E KIT | 1 |
| 10 | 4179924 | HOUSING PIPE D.204X530 1.4301 KIT | 1 |
| 7.3 | 4179571 | > O-RING HOUSING PIPE HELIX22/36/52 VP. | 1 |
| 10.1 | | > HOUSING-PIPE Ø204-M+3607/5205-304 | 1 |
| 11 | 4179583 | CENTRALIZER HELIX 8'' 52 VP. | 1 |
| 12 | 4164724 | SHAFT EQUIPMENT HELIX V52 KIT | 1 |
| 13 | | HYDRAULIC HELIX V 5205 | 1 |
| 14 | 4179926 | SHAFTS D.22X704 1.4057 VP. | 1 |
| 15 | 4186388 | EQUIPED HOUSING HELIX FIRST DN80 DWA KIT | 1 |
| 15.1 | | > PUMP CASING MONO.GJL M+8" DN80 DWA | 1 |
| 15.2 | | > HYD.SUP.M+8" ONE PIECE HOUSING N80 DWA | 1 |
| 15.3 | 4106048 | > DRAIN/PRIMING PLUG EPDM HELIX FIRST KIT | 1 |

| Item | Article no. | Description | Quantity |
|---|---|---|---|
| 15.3A | | >> DRAIN AND PRIMING PLUG-VMI10"-304 | 1 |
| 15.3B | 4032293 | >> O-RING-10x3-EPDM-KTW/WRC | 1 |
| 15.3C | 4233957 | >> O-RING ID.9 EPDM VP. | 1 |
| 7.3 | 4179571 | > O-RING HOUSING PIPE HELIX22/36/52 VP. | 1 |
| 13.1A | 4161200 | > NECK RING 1.STAGE HELIX V36/52 KIT | 1 |
| | | >> NECK-RING-M+36/52 | 1 |
| | | >> HYDRAULIC SUPPORT CAP M+36/52 304 | 1 |
| | | >> SCREW TCL M3X8 A4 POZIDRIV | 1 |

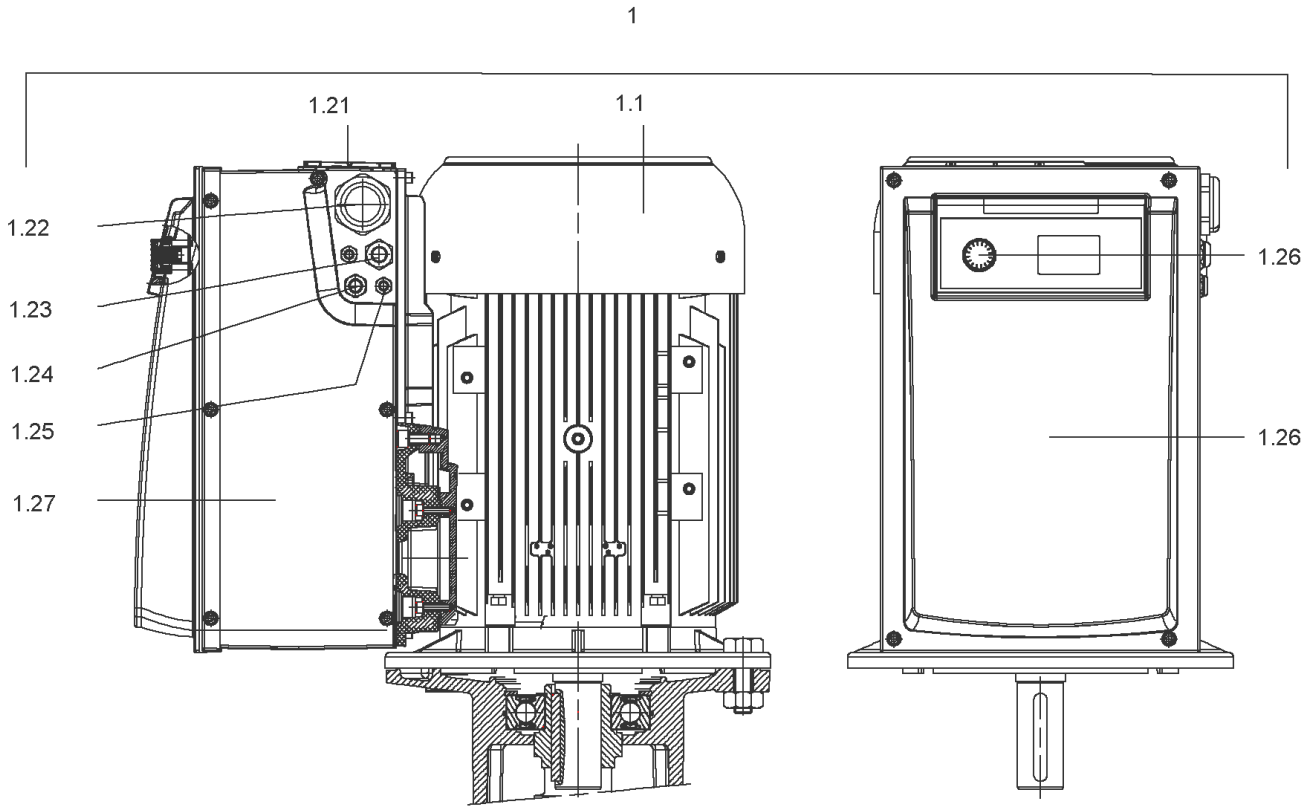
1
1.21
1.1
1.22
1.23
1.24
1.25
1.27
1.26
1.26

## DRIVE HELIX VE5205-IE2-ARC KIT

| Item | Article no. | Description | Quantity |
|---|---|---|---|
| 1.1 | | M18.5-2T540P55V1-160F300-N42-IE2 | 1 |
| | | SPARE PARTS MOTOR:ON REQUEST | 1 |
| 1.21 | 2132103 | FAN LARGE TL6/7 FF KIT | 1 |
| 1.25 | 2132097 | CABLE CONNECTION M12 TL6/7 FF VP. | 1 |
| 1.24 | 2132098 | CABLE CONNECTION M16 TL6/7 FF VP. | 1 |
| 1.23 | 2132099 | CABLE CONNECTION M20 TL6/7 FF VP. | 1 |
| 1.22 | 2132101 | CABLE CONNECTION LARGE M40 TL6/7 FF VP. | 1 |
| 1.27 | 2132104 | COVER SIDE TL6/7 FF CPL.VP. | 1 |
| 1.26 | 2132452 | MODULE COVER/BUTTON TL6/7 FF VP. | 1 |

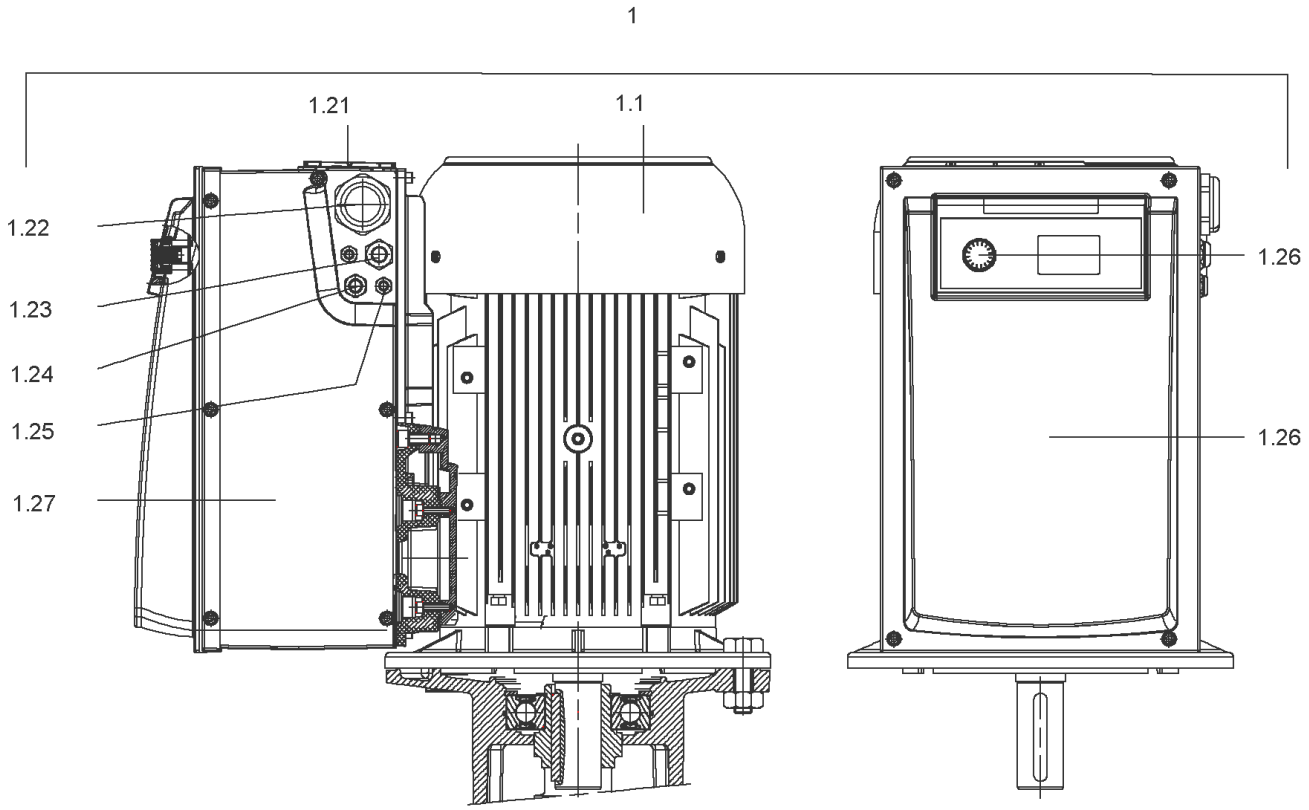
1
1.21
1.1
1.22
1.23
1.24
1.25
1.27
1.26
1.26

## DRIVE HELIX VE5205-IE4-WEG KIT (4213695)

| Item | Article no. | Description | Quantity |
|---|---|---|---|
| 1.1 | | M18,5-2T540P55V1-180F30-N42-ADAP-IE4-WEG | 1 |
| | | SPARE PARTS MOTOR:ON REQUEST | 1 |
| 1.21 | 2132102 | FAN SMALL TL6/7 FF KIT | 1 |
| 1.25 | 2132097 | CABLE CONNECTION M12 TL6/7 FF VP. | 1 |
| 1.24 | 2132098 | CABLE CONNECTION M16 TL6/7 FF VP. | 1 |
| 1.23 | 2132099 | CABLE CONNECTION M20 TL6/7 FF VP. | 1 |
| 1.22 | 2132100 | CABLE CONNECTION SMALL M40 TL6/7 FF VP. | 1 |
| 1.27 | 2132104 | COVER SIDE TL6/7 FF CPL.VP. | 1 |
| 1.26 | 2132452 | MODULE COVER/BUTTON TL6/7 FF VP. | 1 |

## COUPLING D.20XD.38 FF300 KIT (4143966)

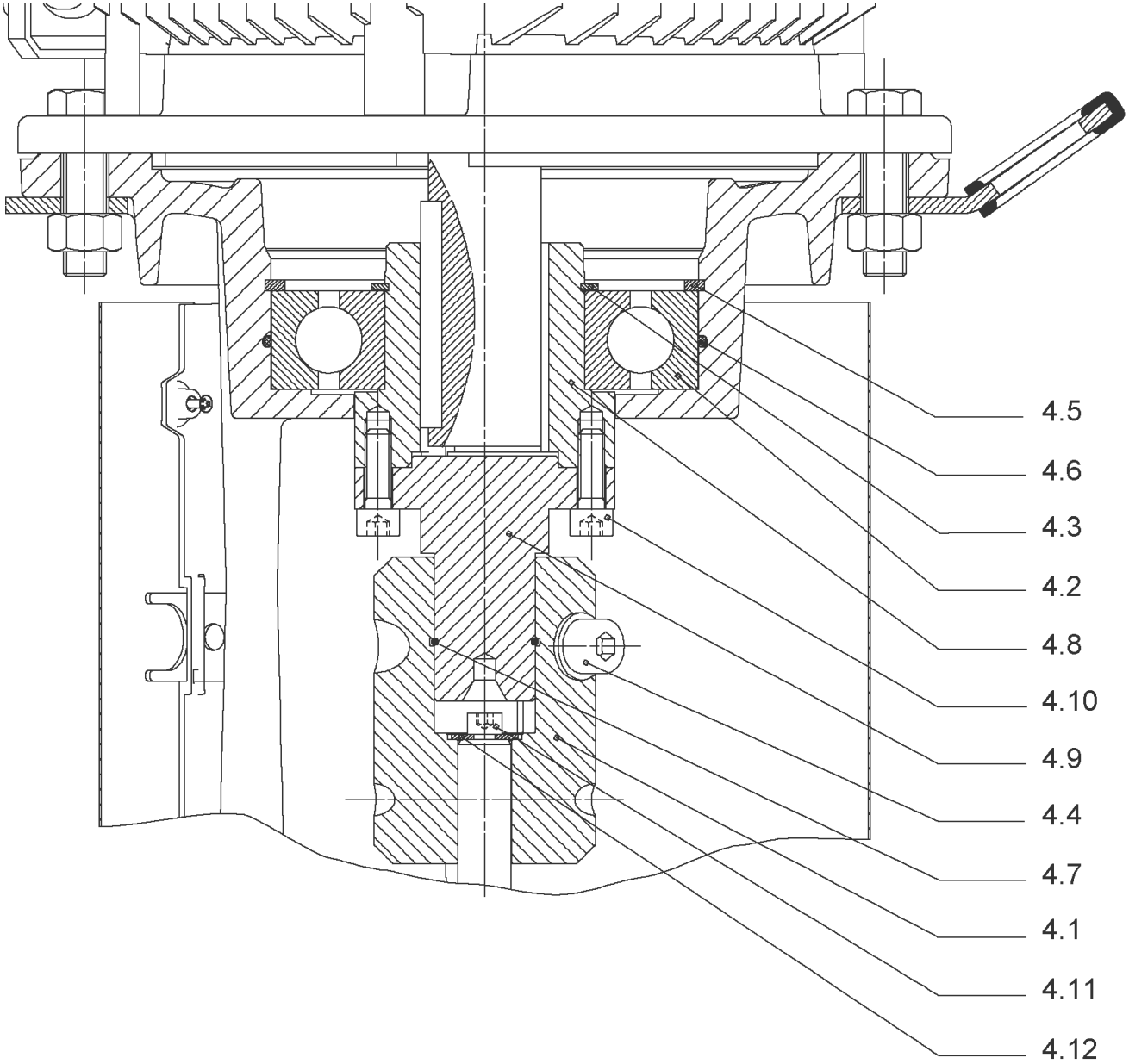

## COUPLING D.20XD.38 FF300 KIT (4143966)

| Item | Article no. | Description | Quantity |
|---|---|---|---|
| 4.1 | 4179590 | COUPLING 2 PARTS D.20XD.38XL115 VP. | 1 |
| 4.2 | 2123699 | BALL BEARING 6312/2Z-C4 (HT) VP. | 1 |
| 4.3 | 63428 | CIRCLIP-FOR-SHAFT-D60x2 | 1 |
| 4.4 | 2130991 | SCREW M12X30 ISO4762 8.8 ZN(4 PIECES) | 1 |
| 4.5 | 4032277 | CIRCLIP-HOLE-130x4 | 1 |
| 4.6 | 4006725 | O-RING ID.132,94x3,53 NBR70SR | 1 |
| 4.7 | 2130992 | RETAINING RING D.35xD.2,5 DIN7993 VP. | 1 |
| 4.8 | 4179591 | HUB D.42xD.60 VP. | 1 |
| 4.9 | 2130994 | SPACER D.38XD.55 VP. | 1 |
| 4.10 | 4094462 | SCREWS M10 ( 4 PIECES ) | 1 |
| 4.11 | 4233959 | SCREW M8x16 VP. | 1 |
| 4.12 | | SERRATED LOCK WASHER Ø8.2XØ25X35X2 | 1 |

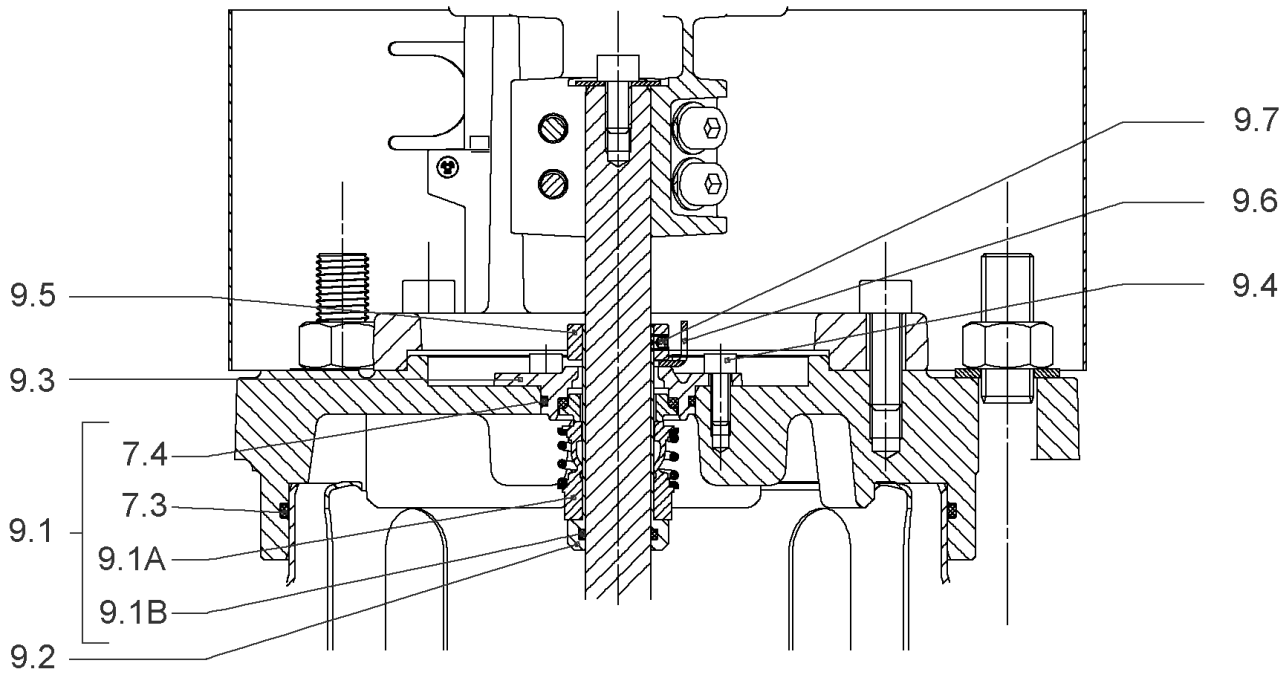
9.7
9.6
9.4
9.5
9.3
7.4
7.3
9.1
9.1A
9.1B
9.2

## CARTRIDGE HELIX22-36-52 O/E KIT (4143973)

| Item | Article no. | Description | Quantity |
|---|---|---|---|
| 9.1 | 4143974 | SEAL-KIT-HELIX22-36-52 O/E | 1 |
| 7.3 | 4179571 | > O-RING HOUSING PIPE HELIX22/36/52 VP. | 1 |
| 7.4 | 4179572 | > O-RING ID.42.52X2.62 EPDM VP. | 1 |
| 9.1A | 4179573 | > M.SEAL.HELIX22-36-52 O/E VP. | 1 |
| 9.1B | 4179574 | > O-RING ID.20x2.65 EPDM VP. | 1 |
| 9.2 | 4179566 | SHAFT SLEEVE D.20/20X60 1.4404 VP. | 1 |
| 9.3 | 4179567 | RING HOLDER Ø22 1.4301 VP. | 1 |
| 9.4 | 4176520 | SCREW CH M5x5 A4-70 ( 3PIECES ) | 1 |
| 9.5 | 4179568 | DRIVE RING D.31/22.1x11 MACH.VP. | 1 |
| 9.6 | 4179569 | TOOL M.S.CART.HELIX 8'' VP. | 1 |
| 9.7 | 4179570 | SCREW M6X16 ISO4762 8.8 GEOMET(4 PIECES) | 1 |

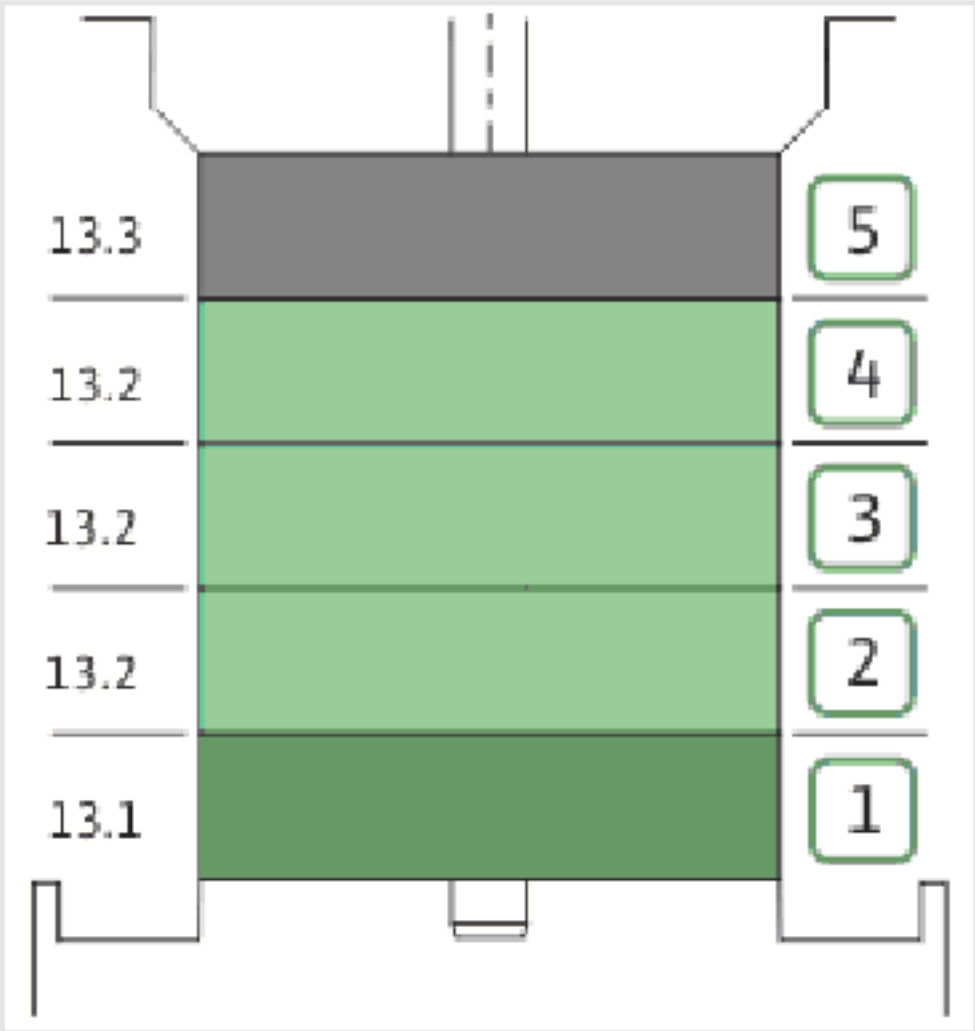
13.3
13.2
13.2
13.2
13.1
5
4
3
2
1

| Item | Article no. | Description | Quantity |
|---|---|---|---|
| 13.1 | 4164727 | INTERMEDIAIRE STAGE HELIX 52 1.4301 KIT | 1 |
| | | > SLEEVE-SPACER-D22XL30,42-316L | 1 |
| | | > MACH.BEARING-DIFFUSER+NR-M+52-304 | 1 |
| | | > SHAFT-SLEEVE-D26xD22x16-CW | 1 |
| | | > SPACER WASHER D22,3XD36 L3-316L | 1 |
| | | > IMPELLER-H2-M+52-304 | 1 |
| 13.1A | 4161200 | > NECK RING 1.STAGE HELIX V36/52 KIT | 1 |
| | | >> NECK-RING-M+36/52 | 1 |
| | | >> HYDRAULIC SUPPORT CAP M+36/52 304 | 1 |
| | | >> SCREW TCL M3X8 A4 POZIDRIV | 1 |
| 13.2 | 4164728 | INTERMEDIATE STAGE HELIX 52 1.4301 KIT | 1 |
| | | > MACH.STD-DIFFUSER+NR-M+52-304 | 1 |
| | | > IMPELLER-H5-M+52-304 | 1 |
| 13.3 | 4164729 | UPPER-STAGE HELIX 52 1.4301 KIT | 1 |
| | | > STOP COLLAR OF IMPELLER L27,6-Ø22-316L | 1 |
| | | > SLEEVE-SPACER-D22XL16,66-316L | 1 |
| | | > SPACER WASHER D22,3XD36 L3-316L | 1 |
| | | > IMPELLER-H2-M+52-304 | 1 |
| | | > MACH.STD-DISCHARGE-CHAMBER-M+52-304 | 1 |

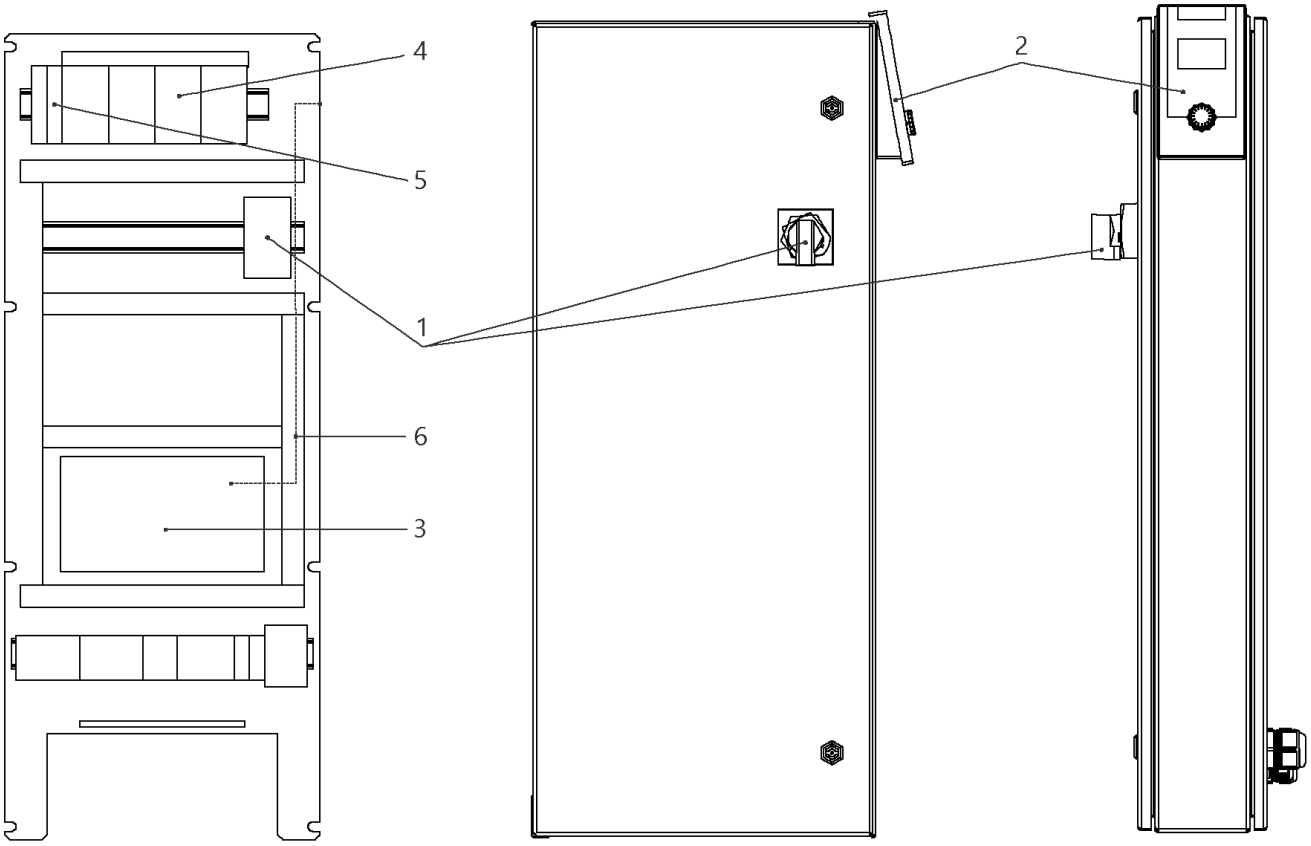
4
5
1
6
3
2

## W-CTRL-SCE-B-2x37,5A-T34-FM-ND2-AVC-PKG

| Item | Article no. | Description | Quantity |
|---|---|---|---|
| 1 | 2104467 | MAIN SWITCH OT100F3 L105 KIT | 1 |
| 2 | 4184784 | CONTROL PANEL HMI SC KIT | 1 |
| 2 | 4185259 | ASSEMBLY DISPLAY SC PKG VP. | 1 |
| Note: DISPLAY ALONE / PLATINE SEULE | | | |
| 3 | 4185257 | ASSEMBLY CPU SCe Booster VP. | 1 |
| 4 | 2051221 | AUTOM.CIRCUIT BREAKER S203 B50 FOR22kW | 1 |
| 5 | 2046288 | CIRCUIT BREAKER S201 B16 | 1 |
| 6 | 4194956 | PATCH CABLE RJ45 CAT6 1,0M BLUE SC-PANEL | 1 |

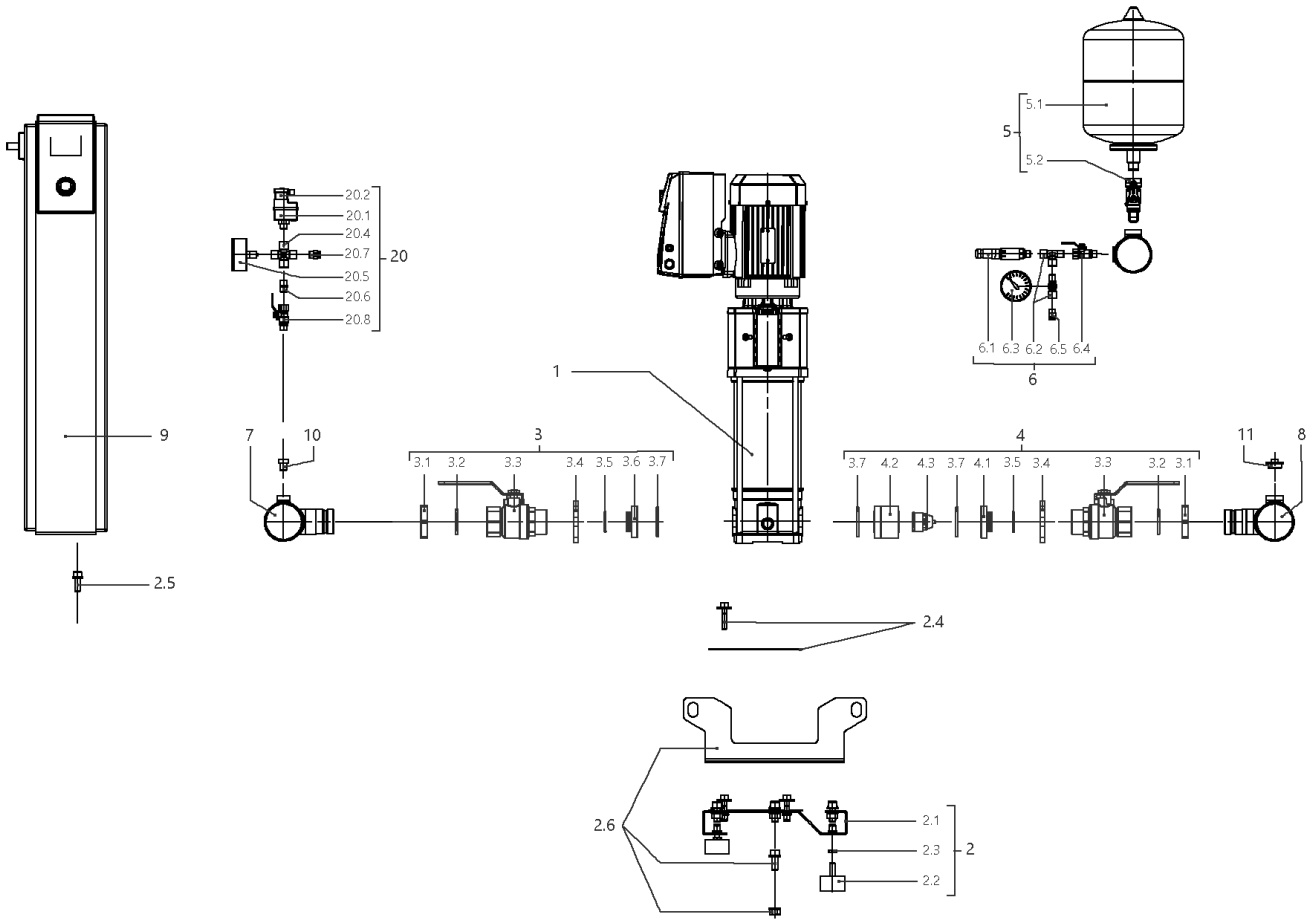
5.1
5
5.2
20.2
20.1
20.4
20.7
20
20.5
20.6
20.8
6.1 6.3 6.2 6.5 6.4
6
1
9
7
10
3
3.1 3.2 3.3 3.4 3.5 3.6 3.7
4
3.7 4.2 4.3 3.7 4.1 3.5 3.4 3.3 3.2 3.1
11
8
2.5
2.4
2.6
2.1
2.3
2
2.2

## SiBoost Smart 3HELIX VE204 (2541588)

| Item | Article no. | Description | Quantity |
|---|---|---|---|
| 1 | | HELIX VE204-1/16/E/S | 1 |
| Note: TO / BIS / JUSQU'AU 29/02/2016 | | | |
| 1 | 4201563 | HELIX VE204-1/16/E/S | 1 |
| Note: FROM / AB / À PARTIR DU 01/03/2016 | | | |
| 2 | 4200137 | BASE PLATE DE3 1150x300 M10 KIT | 1 |
| 2.1 | | > BASEPLATE_3x4/6/10V_E300_1150x300BOX_150 | 1 |
| 2.2 | 2028654 | > VIBRATION DAMPER D.50X30 M10X28 | 1 |
| 2.3 | 2028281 | > NUT M10 DIN936 (ISO4035) 17H VZ | 1 |
| 2.4 | 4199875 | > HOLDER PUMP Siboost Helix V2/4 KIT | 1 |
| 2.5 | 4197084 | > HOLDER SWITCHBOX WILO Smart Control KIT | 1 |
| 2.6 | 4197085 | > LIFTING Siboost HELIX SC KIT | 1 |
| 3 | 4199876 | SUCTION SIDE Siboost Helix V2/4/6 KIT | 1 |
| 3.1 | 2032610 | > NUT G11/4 MS VP. | 1 |
| 3.2 | 2032611 | > O-RING ID.36,09X3,53N DIN3771 E7502 | 1 |
| 3.3 | 2507646 | > BALL VALVE G11/4"M-F-W.HANDLE 1/4-TURN | 1 |
| 3.4 | 2032613 | > SCREWED FLANGE G1 1/4" LK-75 ST37VZ | 1 |
| 3.5 | 2032614 | > O-RING ID.29,82X2,62N DIN3771 E7502 | 1 |
| 3.6 | 2032615 | > SPACER F.I/A KUH.DN32 CUZN | 1 |
| 3.7 | 2032616 | > O-RING ID.44X3,53N DIN3771 E7502 | 1 |
| 4 | 4199877 | DELIVERY SIDE Siboost Helix V2/4/6 KIT | 1 |
| 3.1 | 2032610 | > NUT G11/4 MS VP. | 1 |
| 3.2 | 2032611 | > O-RING ID.36,09X3,53N DIN3771 E7502 | 1 |
| 3.3 | 2507646 | > BALL VALVE G11/4"M-F-W.HANDLE 1/4-TURN | 1 |
| 3.4 | 2032613 | > SCREWED FLANGE G1 1/4" LK-75 ST37VZ | 1 |
| 3.5 | 2032614 | > O-RING ID.29,82X2,62N DIN3771 E7502 | 1 |
| 4.1 | 2058116 | > SPACER F.I/A KUH.DN32 CUZN | 1 |
| 3.7 | 2032616 | > O-RING ID.44X3,53N DIN3771 E7502 | 1 |
| 4.2 | 2058115 | > HOUSING RFV(RV-IN) DN32 SGS/DRS | 1 |
| 4.3 | 2027870 | > NON-RETURN-DEVICE INSERT DN32(MTR) | 1 |
| 5 | 2032642 | DIAPHREM TANK 8L/PN16 DIN4807/T5 KIT | 1 |
| 5.1 | 2045914 | > DIAPHREM TANK 8L TYP-DD 16BAR | 1 |
| 5.2 | 2027853 | > FLOW FITTING G3/4 FOR DIAPHRAGM VES. | 1 |
| 6 | 4197076 | PRESSURE SENSOR/ GAUGE 0-16BAR KIT | 1 |
| 6.1 | 2085909 | > PRESS.SENSOR 1/4" 0-16BAR 4-20MA VP. | 1 |

| Item | Article no. | Description | Quantity |
|---|---|---|---|
| 6.2 | 4197077 | > T-PIECE 1/4" VP. | 1 |
| 6.3 | 2028692 | > PRESSURE GAUGE NG63-PN16-G1/4 | 1 |
| 6.4 | 2028291 | > BALL TAP R1/4" PN42 GIACOMINI R254DL | 1 |
| 6.5 | 2028691 | > BLOWGUN 1/4" MS 30BAR VP. | 1 |
| 7 | 4200147 | PIPE DE4 11/2''-3x11/4"+2x1/4x900 VP. | 1 |
| 8 | 4200148 | PIPE DE4 11/2''-3x11/4"+2x1/4+1x3/4x900 | 1 |
| 9 | | W-CTRL-SCE-B-3x0,55-1,5KW-T4-FM-ND1 | 1 |
| Note: TO / BIS / JUSQU'AU 18/05/2014 | | | |
| 9 | 2541914 | W-CTRL-SCE-B-3x10A-T34-FM-ND1-AVC-PKG | 1 |
| Note: FROM / AB / À PARTIR DU 19/05/2014 | | | |
| 10 | 4197079 | PLUG G1/4"x10 AISI304 KIT | 1 |
| 11 | 2032654 | PLUG R3/4" MS VIEGA 1751 | 1 |
| 20 | | ASSEMBLY WMS. DE-EB. +VP | 1 |
| 20.1 | 2028652 | > PRESSURE SWITCH PS3-ASR 1/(1,3) VP. | 1 |
| 20.2 | 2130983 | > PLUG PS3-415 WITH KABEL 1,5M 2NO VP. | 1 |
| 20.4 | 2028290 | > CROSSPIECE R1/4" MS-NICKEL | 1 |
| 20.5 | 2028687 | > PRESSURE GAUGE NG63 R1/4" HI.0-6BAR | 1 |
| 20.6 | 2054268 | > DUAL NIPPLE G1/4" x G1/4" MS VP. | 1 |
| 20.7 | 2028691 | > BLOWGUN 1/4" MS 30BAR VP. | 1 |
| 20.8 | 2028291 | > BALL TAP R1/4" PN42 GIACOMINI R254DL | 1 |

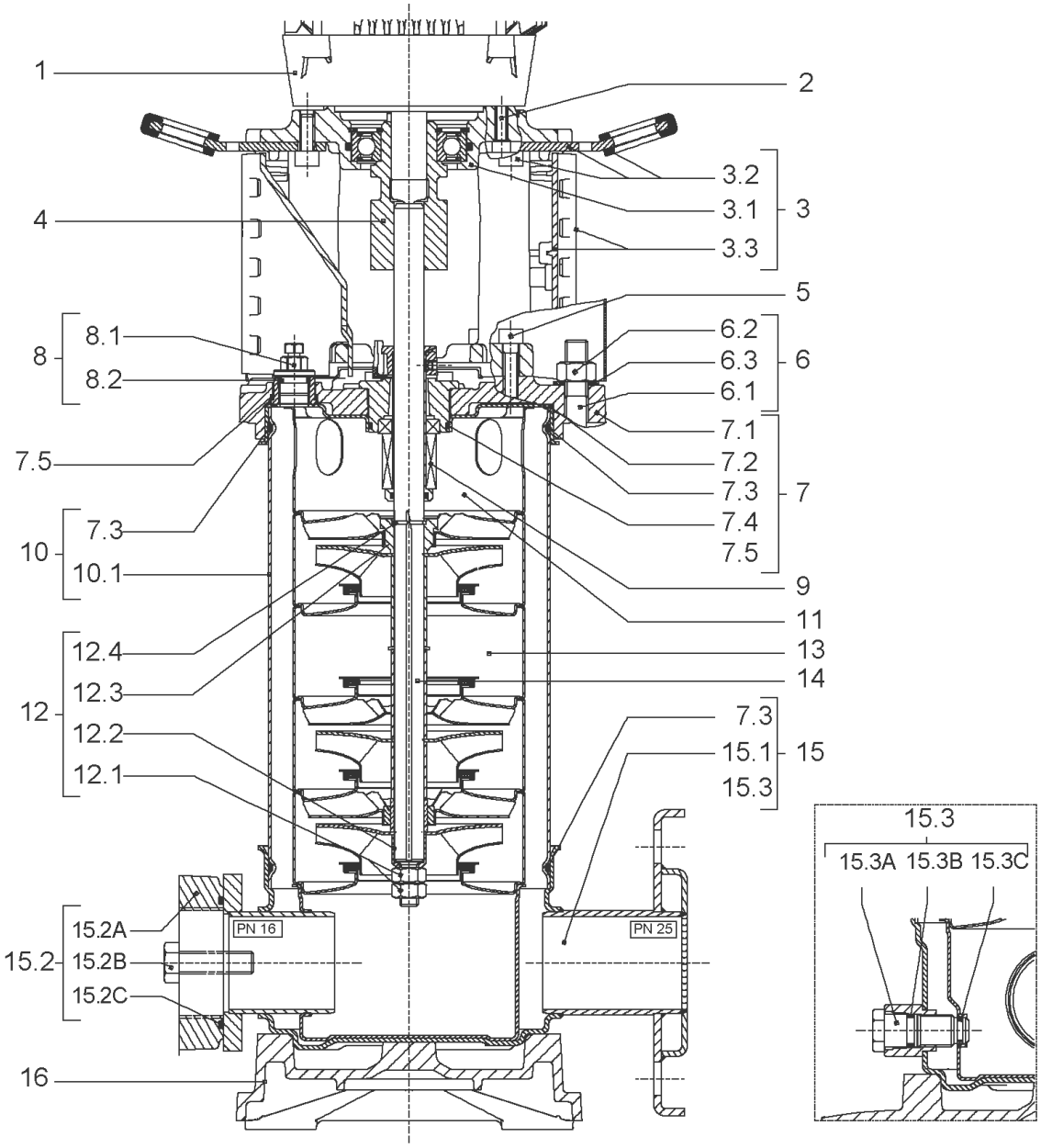
1
2
3.2
3.1
3
3.3
4
5
8.1
8
8.2
6.2
6.3
6
6.1
7.1
7.5
7.2
7.3
7
7.4
7.3
10
7.5
10.1
9
11
12.4
13
12.3
14
12
12.2
7.3
15.1
15
12.1
15.3
15.3
15.3A 15.3B 15.3C
15.2A
PN 16
PN 25
15.2
15.2B
15.2C
16

| Item | Article no. | Description | Quantity |
|---|---|---|---|
| 1 | | DRIVE HELIX-VE204-IE2-WE KIT | 1 |
| Note: MOTOR BRAND WILO ELEC | | | |
| 1 | | DRIVE HELIX-VE204-IE4-WE KIT | 1 |
| Note: MOTOR BRAND WILO ELEC | | | |
| 2 | 4159702 | SCREW M6X30 (4 PIECES) | 1 |
| 3 | 4171325 | LANTERN MONOBLOC FT85 HELIX KIT | 1 |
| 3.1 | | > M+5_6_LANTERN_ONE-PIECE_FT85_CATA | 1 |
| 3.2 | 2127604 | > EYELET CPL.FT HELIX(2 PIECES) | 1 |
| 3.3 | 4159692 | > COUPLING PROTECTOR FT HELIX KIT | 1 |
| 4 | 4178554 | COUPLING FT 85 Ø12XØ14 KIT | 1 |
| 5 | 4159707 | SCREW M8X30 (4 PIECES) | 1 |
| 6 | 2018368 | STUD BOLT M12X289 KIT | 1 |
| 6.1 | | > TIE BOLT M12-289x18x30-1.4057 | 1 |
| 6.2 | 2094647 | > NUT M12 M12 ISO4032 VP. | 1 |
| 6.3 | 2123557 | > WASHER CS-12.4-24-1.6-NFE25 (4 PIECES) | 1 |
| 7 | 4210143 | STATIONARY RING HOLDER HELIX 6" EPDM | 1 |
| 7.2 | 2127607 | > STATIONARY RING HOLDER 6" HELIX 1.4301 V | 1 |
| 7.3 | 4176513 | > O-RING FOR PUMP JACKET VP. | 1 |
| 7.4 | 2127603 | > O-RING ID.37,6x2,4 EPDM VP. | 1 |
| 7.5 | 2127602 | > O-RING ID.21,35x2 EPDM VP. | 1 |
| 8 | 4159686 | FILING/PURGING PLUG HELIX EPDM KIT | 1 |
| 9 | 4178564 | SEAL-KIT-HELIX2-4 O/E KIT | 1 |
| 10 | 2127574 | HOUSING PIPE D.152x160 1.4301 KIT | 1 |
| 7.3 | 4176513 | > O-RING FOR PUMP JACKET VP. | 1 |
| 10.1 | | > HOUSING-PIPE Ø152-M+1601/02-304 | 1 |
| 11 | 4179315 | CENTERING STAGE HELIX V2 1.4307 VP. | 1 |
| 12 | 4178568 | SHAFT EQUIPMENT HELIX V2/V4 KIT | 1 |
| 12.1 | | > NUT-H-M8-STAINLESS-STEEL A4-70 | 2 |
| 12.2 | | > SHAFT END WASHER Ø8/Ø12 316L | 1 |
| 12.3 | | > STOP COLLAR OF IMPELLER M+2/4 SINGLEBLOC | 1 |
| 12.4 | | > STOP-RUSH-1/2-D12xd2-M+316 | 2 |
| 13 | | HYDRAULIC HELIX V 204 1.4307 | 1 |
| 14 | 4178576 | SHAFT D.12X283 1.4301 VP. | 1 |
| 15 | 4174079 | PUMP HOUSING HELIX DN32 PN16 1.4301 KIT | 1 |

| Item | Article no. | Description | Quantity |
|---|---|---|---|
| 7.3 | 4176513 | > O-RING FOR PUMP JACKET VP. | 1 |
| 15.1 | | > BLASTING PPE HOUSING V-PN16-DN32-5"-304 | 1 |
| 15.2 | 4217889 | > COUNTER FLANGE-G1"-PN16-GJL KIT | 1 |
| 15.3 | 4171321 | > PRIMING/DRAIN PLUG EPDM HELIX KIT | 1 |
| 16 | 4177964 | BASEPLATE HELIX V2/4/6 PN16 VP. | 1 |

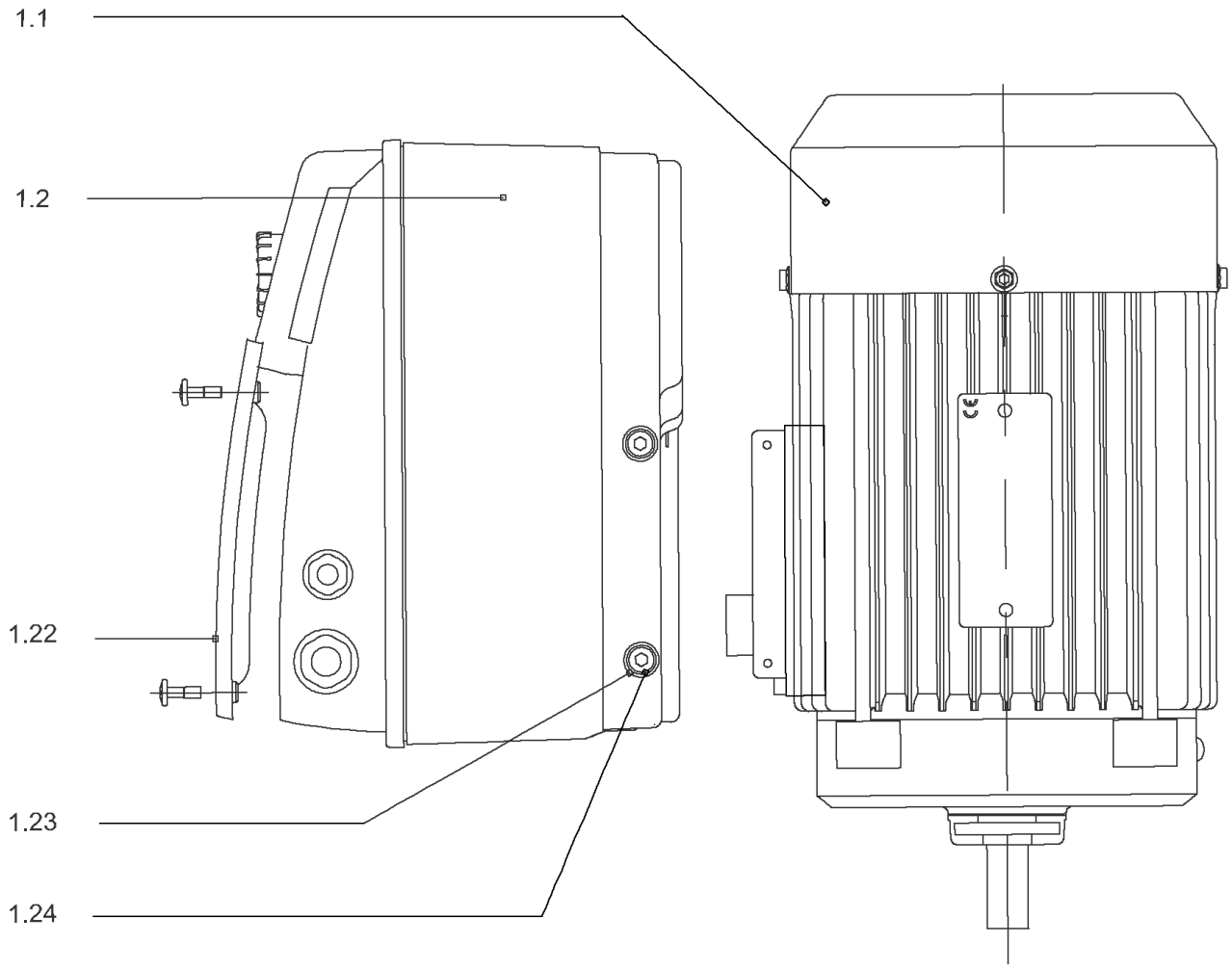
1.1
1.2
1.22
1.23
1.24

## DRIVE HELIX-VE204-IE2-WE KIT

| Item | Article no. | Description | Quantity |
|---|---|---|---|
| 1.1 | | MOTOR 0,55/2/80 3~ 380V 60HZ IE2 WE VP. | 1 |
| Note: no longer available/nicht mehrlieferbar/n'est plus disponible | | | |
| | | SPARE PARTS MOTOR:ON REQUEST | 1 |
| 1.2 | 4184861 | MODULE HELIX-VE204-IE2-WE KIT | 1 |
| 1.22 | 2054372 | > MODULE COVER TL1,TL2+GASKET KIT | 1 |
| 1.23 | 4215716 | > SCREW M5X16 DIN912 8.8 A2A (4pieces) VP. | 1 |
| 1.24 | 2057978 | > RONDELLE A5,3 DIN6797 FST ZN (4 PIECES) | 1 |

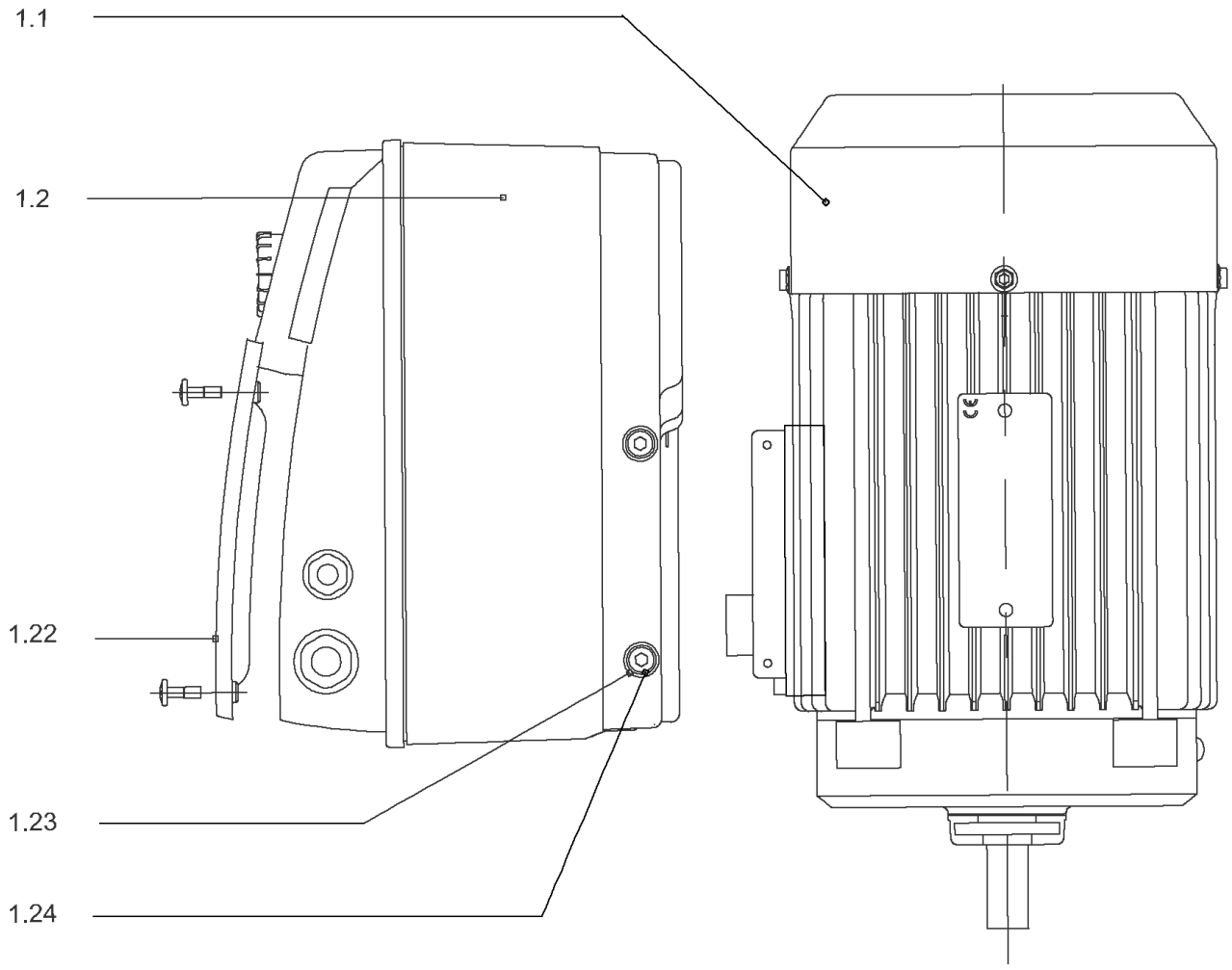
1.1
1.2
1.22
1.23
1.24

## DRIVE HELIX-VE204-IE4-WE KIT

| Item | Article no. | Description | Quantity |
|---|---|---|---|
| 1.1 | 4207912 | MOTOR 0.55/2/71 3~ 380V 60HZ IE4 WE VP. | 1 |
| | | SPARE PARTS MOTOR:ON REQUEST | 1 |
| 1.2 | 4209318 | MODULE HELIX-VE204-IE4-WE KIT | 1 |
| 1.22 | 2054372 | > MODULE COVER TL1,TL2+GASKET KIT | 1 |
| 1.23 | 4215716 | > SCREW M5X16 DIN912 8.8 A2A (4pieces) VP. | 1 |
| 1.24 | 2057978 | > RONDELLE A5,3 DIN6797 FST ZN (4 PIECES) | 1 |

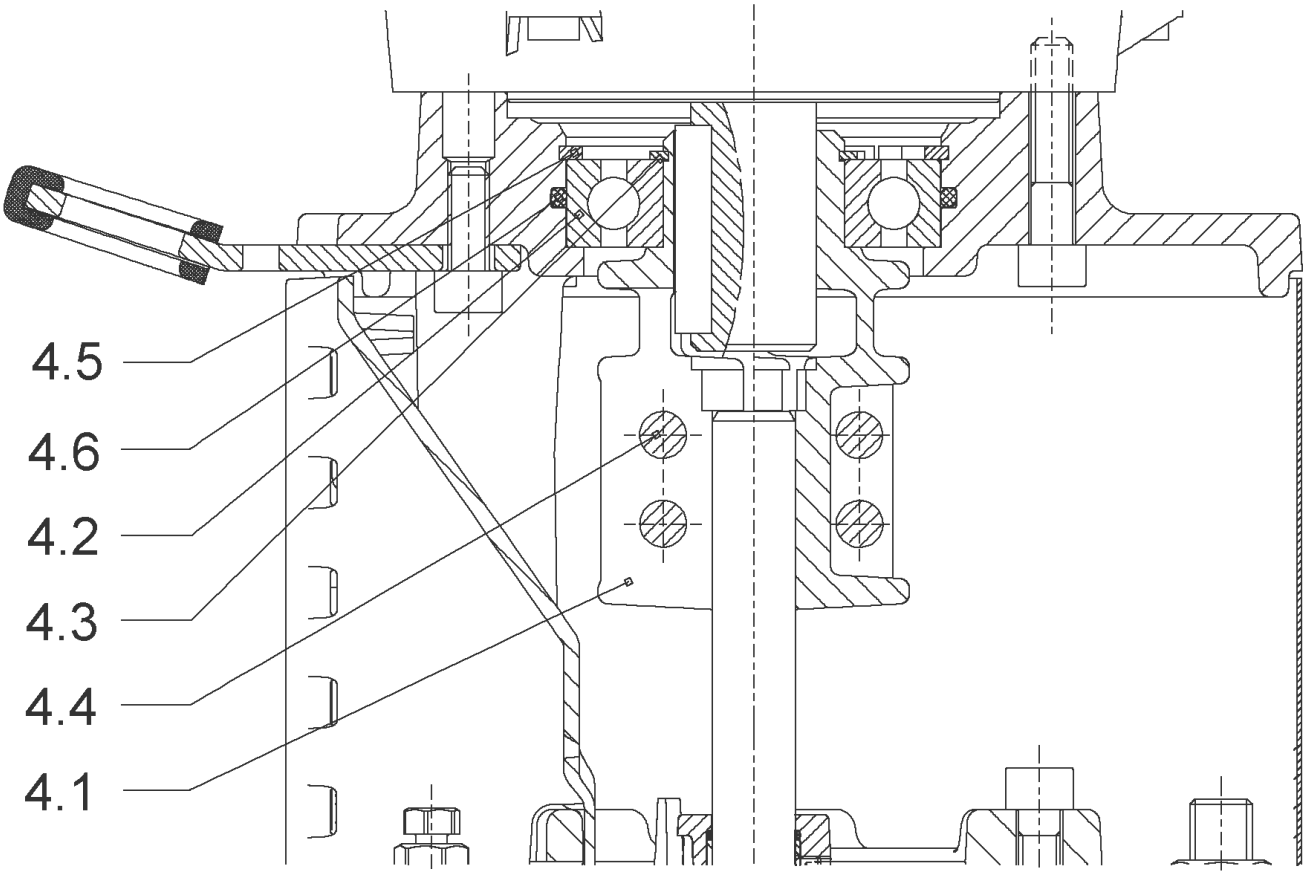
4.5
4.6
4.2
4.3
4.4
4.1

## COUPLING FT 85 Ø12XØ14 KIT (4178554)

| Item | Article no. | Description | Quantity |
|---|---|---|---|
| 4.1 | | COUPLING-M+ Ø12XØ14-FT85-MACHINED | 1 |
| 4.3 | 4208923 | CIRCLIP D25X1.2 VP. | 1 |
| 4.2 | 4177802 | BALL BEARING 6205C3-ZZ HTVP. | 1 |
| 4.4 | 4212716 | SCREW M6X20 KIT (4PIECES) | 1 |
| 4.5 | 4233124 | CIRCLIP-FOR-BORES-D52x2 VP. | 1 |
| 4.6 | 4234244 | O-RING 52X2 VP. | 1 |
| | | CONTACT-WASHER-6ETR-6,1x12,2x1,8-STEEL | 4 |

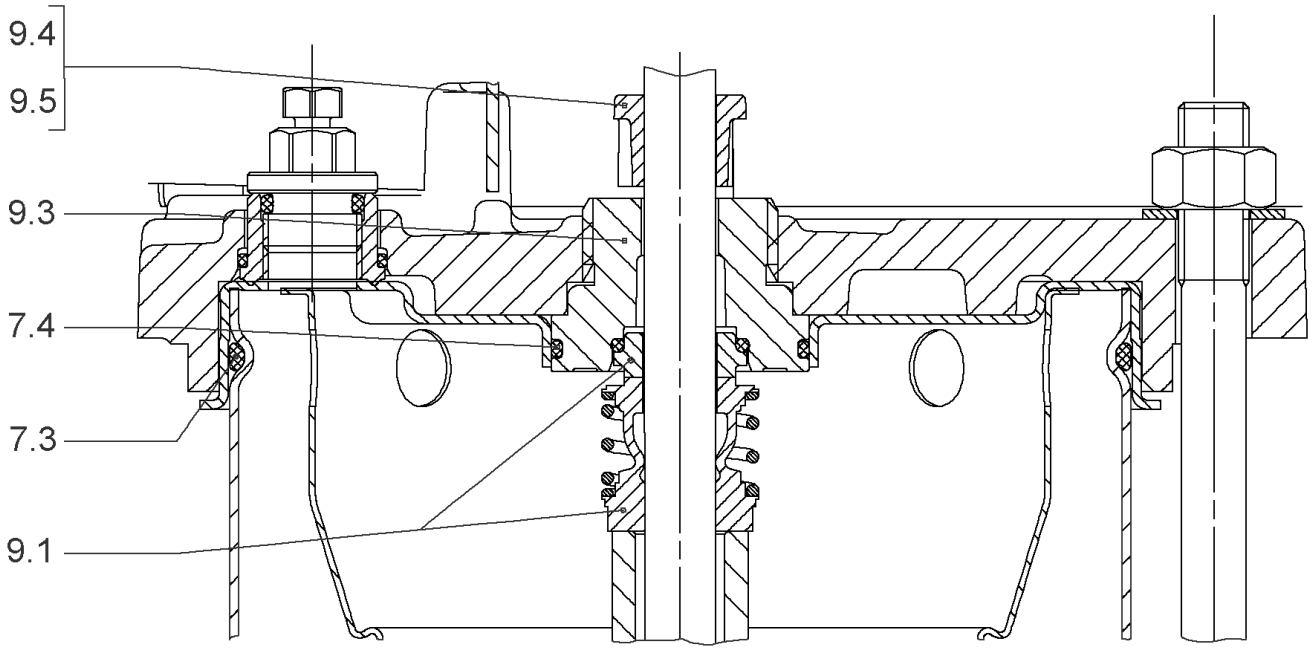
9.4
9.5
9.3
7.4
7.3
9.1

## SEAL-KIT-HELIX2-4 O/E KIT (4178564)

| Item | Article no. | Description | Quantity |
|---|---|---|---|
| 7.3 | 4176513 | O-RING FOR PUMP JACKET VP. | 1 |
| 7.4 | 2127603 | O-RING ID.37,6x2,4 EPDM VP. | 1 |
| 9.1 | 4178563 | M.SEAL.HELIX2-4 O/E VP. | 1 |
| 9.3 | 4178561 | RING HOLDER Ø22 1.4301 VP. | 1 |
| 9.5 | 4178562 | DRIVE RING D.22/12.2X10 MACH.VP. | 1 |
| 9.4 | 4176520 | SCREW CH M5x5 A4-70 ( 3PIECES ) | 1 |

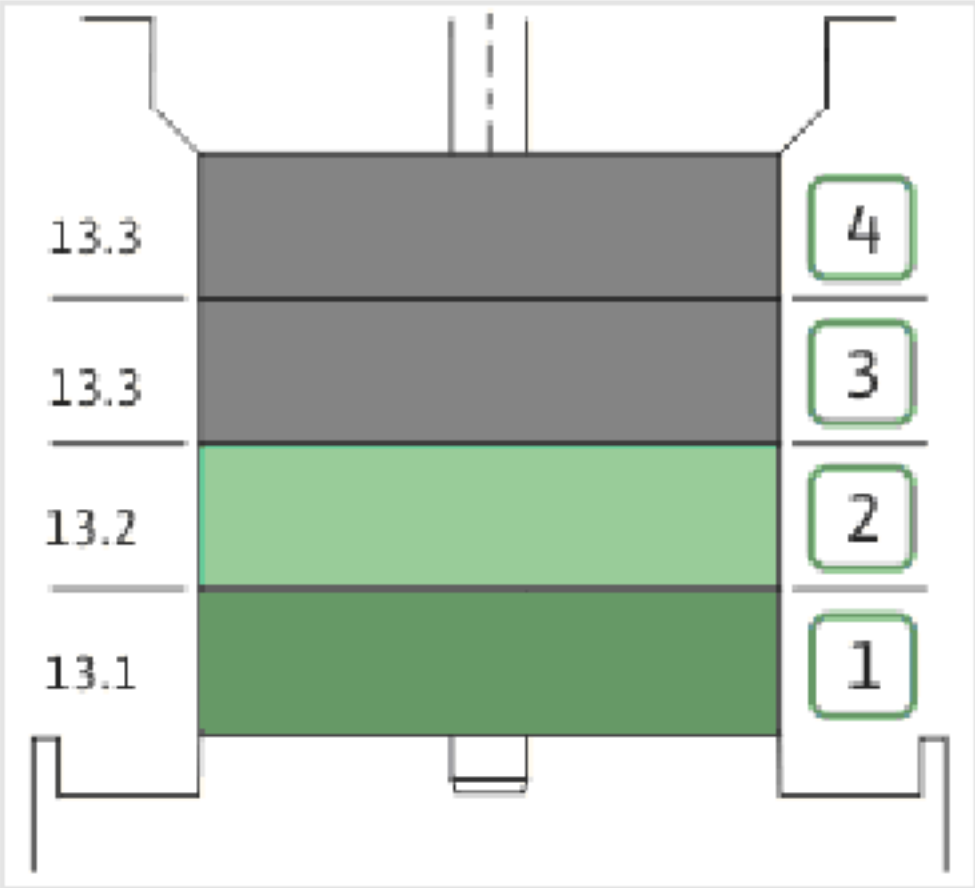
13.3
13.3
13.2
13.1
4
3
2
1

## HYDRAULIC HELIX V 204 1.4307

| Item | Article no. | Description | Quantity |
|---|---|---|---|
| 13.1 | 4179316 | STAGE HELIX 2 1.4301 KIT | 1 |
| | | > MACH.STG-CASING-WOGV-WNR-M+2-4-304 | 1 |
| | | > IMPELLER-M+2-304 | 1 |
| 13.2 | 4179317 | STAGE BEARING HELIX 2 1.4307 KIT | 1 |
| | | > MACH.BEARING-STG-CASING-WNR-M+2-304 | 1 |
| | | > IMPELLER-M+2-304 | 1 |
| | | > SHAFT SLEEVE SPACER Ø15,35x10,305-304 | 1 |
| | | > SHAFT-SLEEVE-D12xD16x14-CW | 1 |
| 13.3 | 4179319 | INTERMEDIATE STAGE HELIX 2 1.4301 KIT | 1 |
| | | > CORPS-ETG-STD-ACR-AJR-USIN.M+2-304 | 1 |
| | | > IMPELLER-M+2-304 | 1 |
| | | > IMPELLER SPACER Ø12,05X14,85-L24,285-304 | 1 |

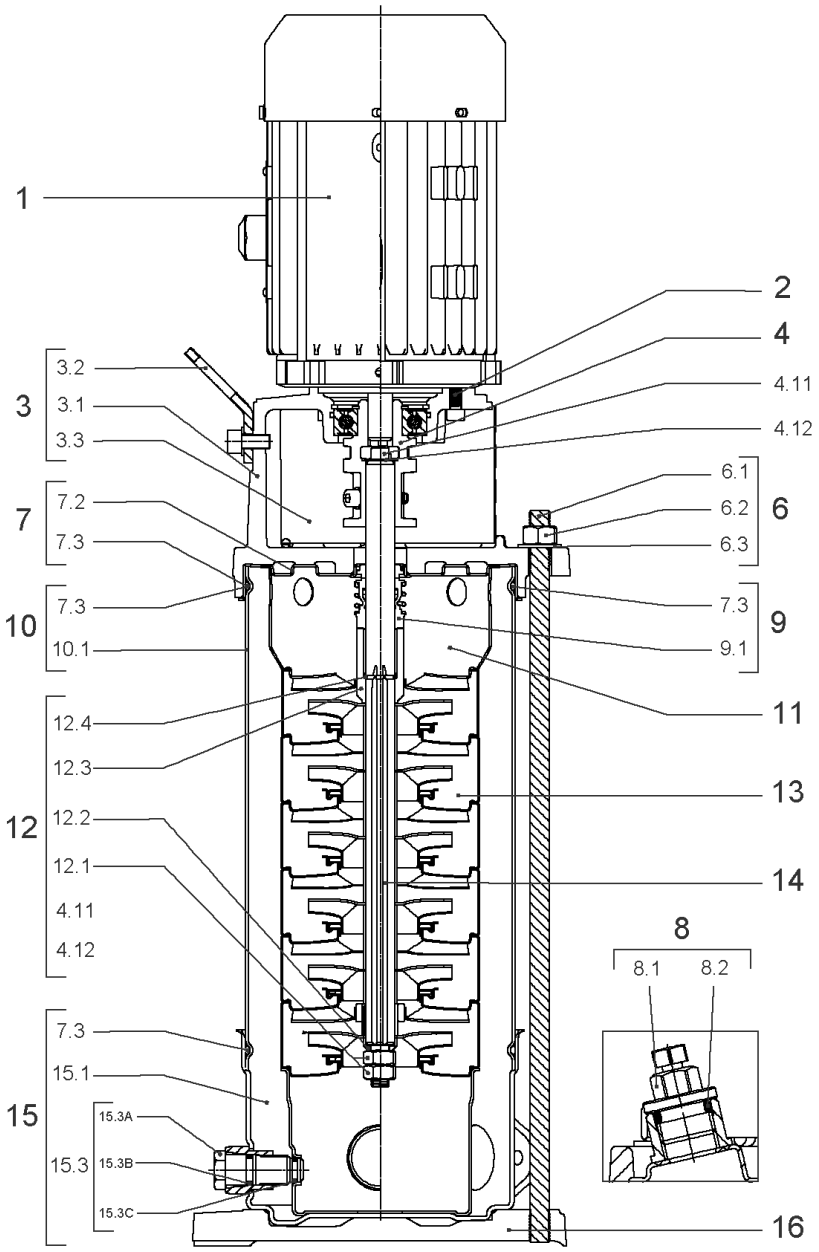
1
2
4
4.11
4.12
3
3.2
3.1
3.3
7
7.2
7.3
6
6.1
6.2
6.3
10
7.3
10.1
9
7.3
9.1
11
12
12.4
12.3
12.2
12.1
4.11
4.12
13
14
8
8.1
8.2
15
7.3
15.1
15.3
15.3A
15.3B
15.3C
16

## HELIX VE204-1/16/E/S (4201563)

| Item | Article no. | Description | Quantity |
|---|---|---|---|
| 1 | | DRIVE HELIX-VE204-IE4-WE KIT | 1 |
| Note: MOTOR BRAND WILO ELEC | | | |
| | | SPARE PARTS MOTOR:ON REQUEST | 1 |
| 2 | 4212716 | SCREW M6X20 KIT (4PIECES) | 1 |
| 3 | 4213715 | LANTERN FT85 HELIX KIT | 1 |
| 3.1 | | > LANT-MOT-VMI-ReDTC6"-FT85-MACHINED+CATA | 1 |
| 3.2 | 4184852 | > EYELET CPL.FT HELIX (2 PIECES) | 1 |
| 3.3 | 4213713 | > COUPLING PROTECTOR FT85/100 HELIX KIT | 1 |
| 4 | 4212718 | COUPLING HELIX D12 FT85 KIT | 1 |
| 6 | 2018368 | STUD BOLT M12X289 KIT | 1 |
| 6.1 | | > TIE BOLT M12-289x18x30-1.4057 | 1 |
| 6.2 | 2094647 | > NUT M12 M12 ISO4032 VP. | 1 |
| 6.3 | 2123557 | > WASHER CS-12.4-24-1.6-NFE25 (4 PIECES) | 1 |
| 7 | 4212722 | STATIONARY RING HOLDER HELIX D23 ReDTC | 1 |
| 7.2 | 4212720 | > STATIONARY RING HOLDER HELIX D23 VP. | 1 |
| 7.3 | 4176513 | > O-RING FOR PUMP JACKET VP. | 1 |
| 8 | 4212724 | FILING/PURGING PLUG HELIX ReDTC KIT | 1 |
| 8.1 | | > FILLING PLUG MVI6"-304 | 1 |
| 8.2 | 4177800 | > O-RING EPDM PLUG HELIX VP. | 1 |
| 9 | 4212726 | MECH.SEAL HELIX V2/4 O/E ReDTC KIT | 1 |
| 9.1 | 4178563 | > M.SEAL.HELIX2-4 O/E VP. | 1 |
| 7.3 | 4176513 | > O-RING FOR PUMP JACKET VP. | 1 |
| 10 | 2127574 | HOUSING PIPE D.152x160 1.4301 KIT | 1 |
| 7.3 | 4176513 | > O-RING FOR PUMP JACKET VP. | 1 |
| 10.1 | | > HOUSING-PIPE Ø152-M+1601/02-304 | 1 |
| 11 | 4179315 | CENTERING STAGE HELIX V2 1.4307 VP. | 1 |
| 12 | 4212729 | SHAFT EQUIPMENT HELIX V2/4 ReDTC KIT | 1 |
| 12.1 | | > NUT-H-M8-STAINLESS-STEEL A4-70 | 1 |
| 12.2 | | > SHAFT END WASHER Ø8/Ø12 316L | 1 |
| 12.3 | | > 1/2-SNAP-RING-2/4M3-316L | 1 |
| 12.4 | | > STOP-RUSH-1/2-D12xd2-M+316 | 1 |
| 4.11 | | > SCREW CHC-M6X14-8.8-ISO4762-GEOMET500A | 1 |
| 4.12 | | > WASHER D.24 L6U ZINK | 1 |
| 13 | | HYDRAULIC HELIX V 204 1.4307 | 1 |

| Item | Article no. | Description | Quantity |
|---|---|---|---|
| 14 | 4213744 | SHAFT D.12X231 HELIX 1.4057 VP. | 1 |
| 15 | 4174079 | PUMP HOUSING HELIX DN32 PN16 1.4301 KIT | 1 |
| 7.3 | 4176513 | > O-RING FOR PUMP JACKET VP. | 1 |
| 15.1 | | > BLASTING PPE HOUSING V-PN16-DN32-5"-304 | 1 |
| 15.2 | 4217889 | > COUNTER FLANGE-G1"-PN16-GJL KIT | 1 |
| 15.3 | 4171321 | > PRIMING/DRAIN PLUG EPDM HELIX KIT | 1 |
| 16 | 4177964 | BASEPLATE HELIX V2/4/6 PN16 VP. | 1 |

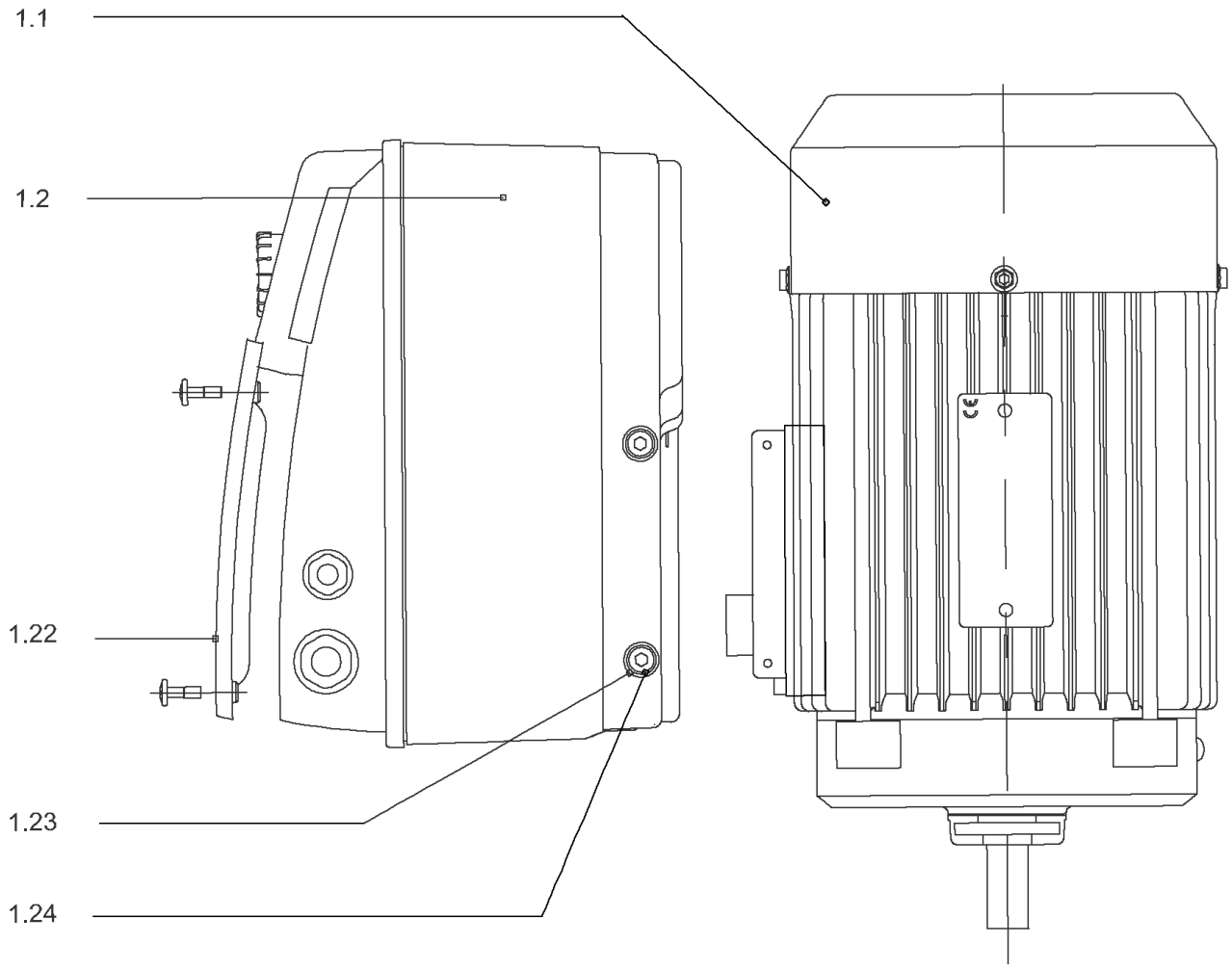
1.1
1.2
1.22
1.23
1.24

## DRIVE HELIX-VE204-IE4-WE KIT

| Item | Article no. | Description | Quantity |
|---|---|---|---|
| 1.1 | 4207912 | MOTOR 0.55/2/71 3~ 380V 60HZ IE4 WE VP. | 1 |
| | | SPARE PARTS MOTOR:ON REQUEST | 1 |
| 1.2 | 4209318 | MODULE HELIX-VE204-IE4-WE KIT | 1 |
| 1.22 | 2054372 | > MODULE COVER TL1,TL2+GASKET KIT | 1 |
| 1.23 | 4215716 | > SCREW M5X16 DIN912 8.8 A2A (4pieces) VP. | 1 |
| 1.24 | 2057978 | > RONDELLE A5,3 DIN6797 FST ZN (4 PIECES) | 1 |

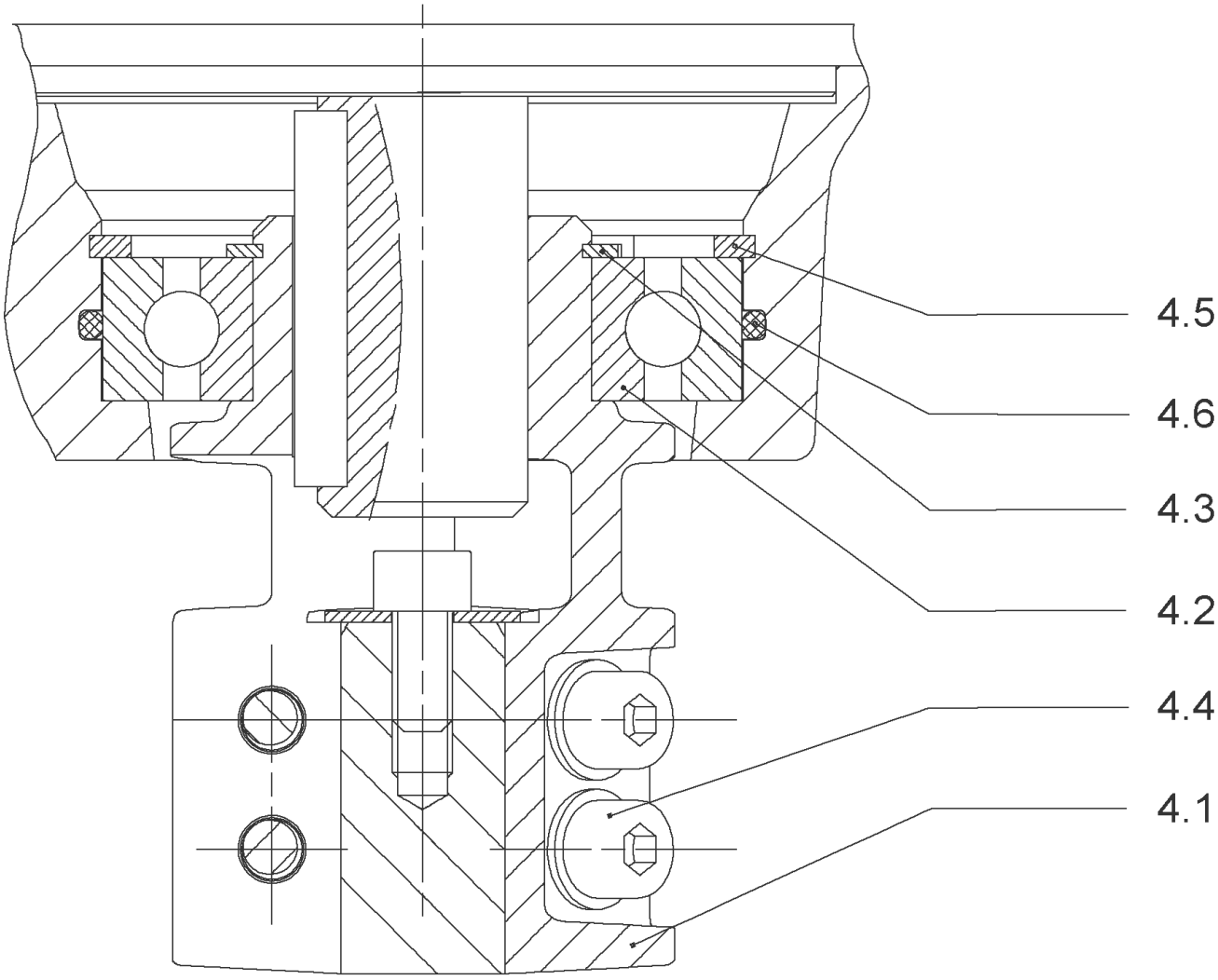
4.5
4.6
4.3
4.2
4.4
4.1

## COUPLING HELIX D12 FT85 KIT (4212718)

| Item | Article no. | Description | Quantity |
|---|---|---|---|
| 4.1 | | COUPLING-VMI-Ø12xØ14-FT85-USINE | 1 |
| 4.2 | 4177802 | BALL BEARING 6205C3-ZZ HTVP. | 1 |
| 4.3 | 4208923 | CIRCLIP D25X1.2 VP. | 1 |
| 4.4 | 4212716 | SCREW M6X20 KIT (4PIECES) | 1 |
| 4.5 | 4233124 | CIRCLIP-FOR-BORES-D52x2 VP. | 1 |
| 4.6 | 4234244 | O-RING 52X2 VP. | 1 |
| | | CONTACT-WASHER-6ETR-6,1x12,2x1,8-STEEL | 1 |

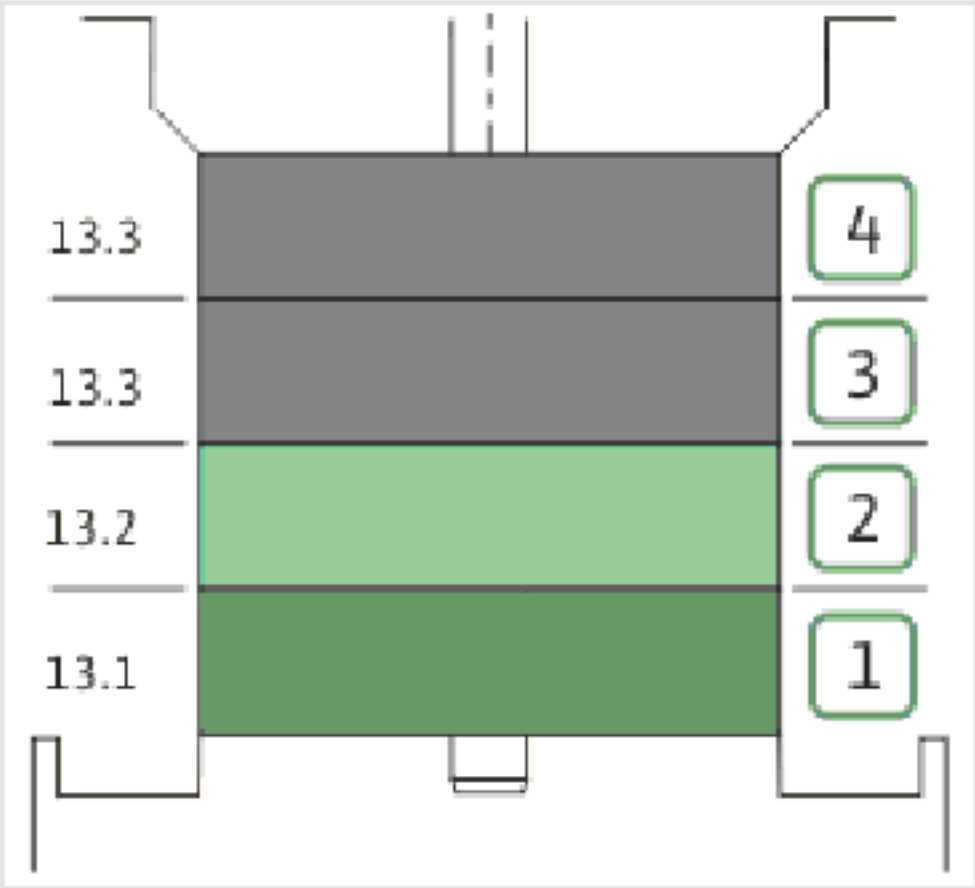
13.3
13.3
13.2
13.1
4
3
2
1

| Item | Article no. | Description | Quantity |
|---|---|---|---|
| 13.1 | 4179316 | STAGE HELIX 2 1.4301 KIT | 1 |
| | | > MACH.STG-CASING-WOGV-WNR-M+2-4-304 | 1 |
| | | > IMPELLER-M+2-304 | 1 |
| 13.2 | 4179317 | STAGE BEARING HELIX 2 1.4307 KIT | 1 |
| | | > MACH.BEARING-STG-CASING-WNR-M+2-304 | 1 |
| | | > IMPELLER-M+2-304 | 1 |
| | | > SHAFT SLEEVE SPACER Ø15,35x10,305-304 | 1 |
| | | > SHAFT-SLEEVE-D12xD16x14-CW | 1 |
| 13.3 | 4179319 | INTERMEDIATE STAGE HELIX 2 1.4301 KIT | 1 |
| | | > CORPS-ETG-STD-ACR-AJR-USIN.M+2-304 | 1 |
| | | > IMPELLER-M+2-304 | 1 |
| | | > IMPELLER SPACER Ø12,05X14,85-L24,285-304 | 1 |

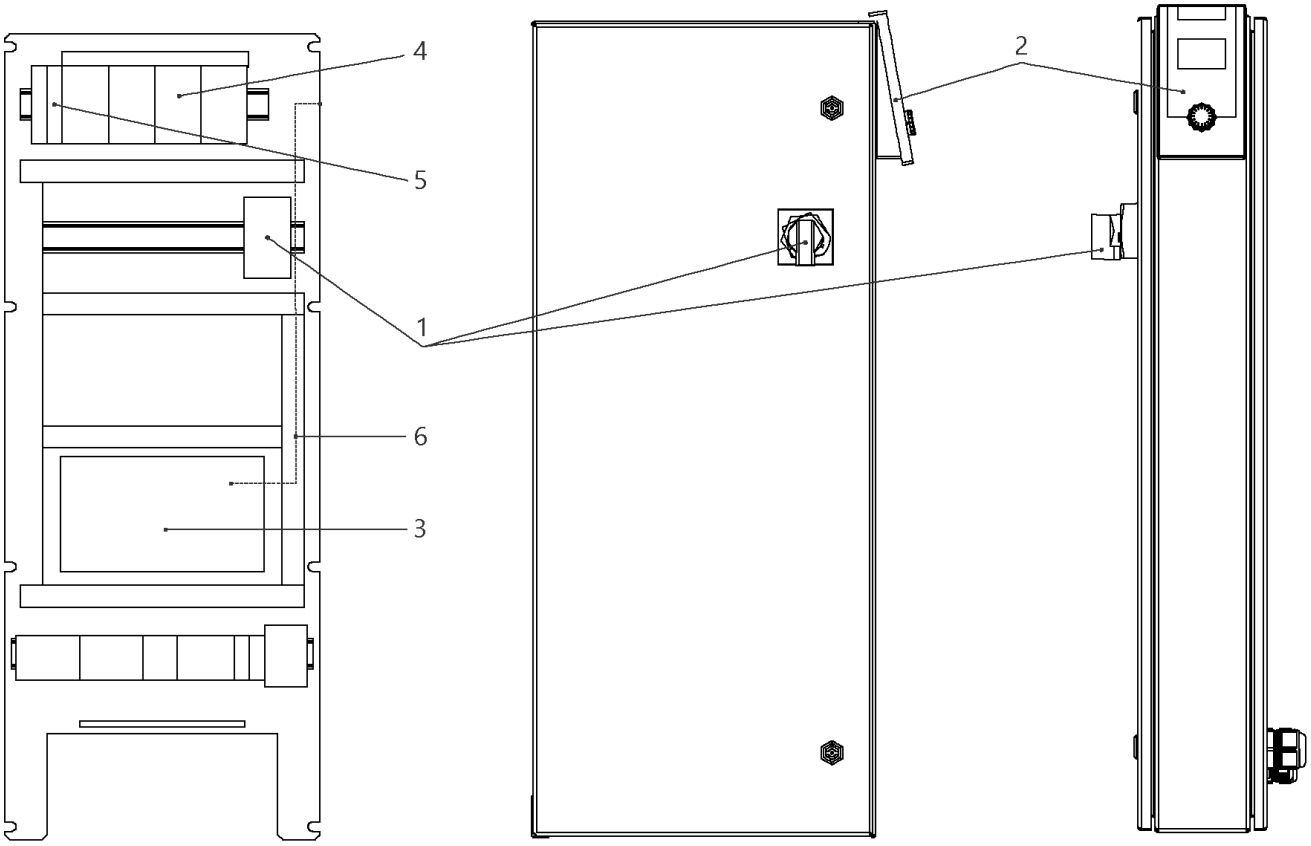
4
5
1
6
3
2

## W-CTRL-SCE-B-3x0,55-1,5KW-T4-FM-ND1

| Item | Article no. | Description | Quantity |
|---|---|---|---|
| 1 | 2104470 | MAIN SWITCH OT40F3 L250 KIT | 1 |
| 2 | 4184784 | CONTROL PANEL HMI SC KIT | 1 |
| 2 | 4185259 | ASSEMBLY DISPLAY SC PKG VP. | 1 |
| 3 | 4185257 | ASSEMBLY CPU SCe Booster VP. | 1 |
| 4 | 2051217 | AUTOM.CIRCUIT BREAKER S203 B16 TO7,5kW | 1 |
| 5 | 2046288 | CIRCUIT BREAKER S201 B16 | 1 |
| 6 | 4197081 | CABLE RJ45 CAT6 0,5M RED SC-PANEL VP. | 1 |

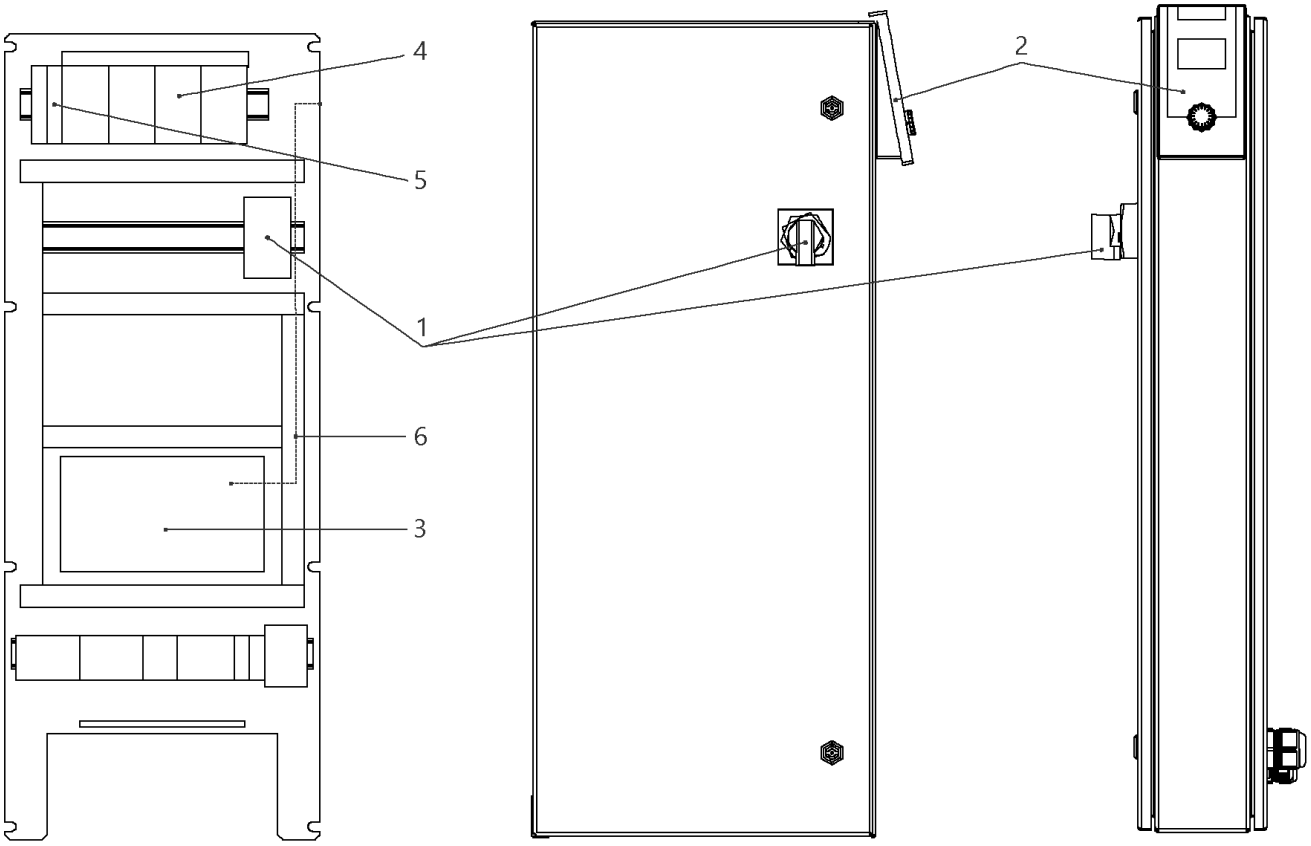
4
5
1
6
3
2

## W-CTRL-SCE-B-3x10A-T34-FM-ND1-AVC-PKG (2541914)

| Item | Article no. | Description | Quantity |
|---|---|---|---|
| 1 | 2104473 | MAIN SWITCH OT63F3 L105 KIT | 1 |
| Note: TO / BIS / JUSQU'AU 30/06/2015 | | | |
| 1 | 2104470 | MAIN SWITCH OT40F3 L250 KIT | 1 |
| Note: FROM / AB / À PARTIR DU 01/07/2015 | | | |
| 2 | 4184784 | CONTROL PANEL HMI SC KIT | 1 |
| 2 | 4185259 | ASSEMBLY DISPLAY SC PKG VP. | 1 |
| Note: DISPLAY ALONE / PLATINE SEULE | | | |
| 3 | 4185257 | ASSEMBLY CPU SCe Booster VP. | 1 |
| 4 | 2119861 | AUTOMATIC CIRCUIT BREAKER S203 B13 3POL. | 1 |
| 5 | 2046288 | CIRCUIT BREAKER S201 B16 | 1 |
| 6 | 4197081 | CABLE RJ45 CAT6 0,5M RED SC-PANEL VP. | 1 |

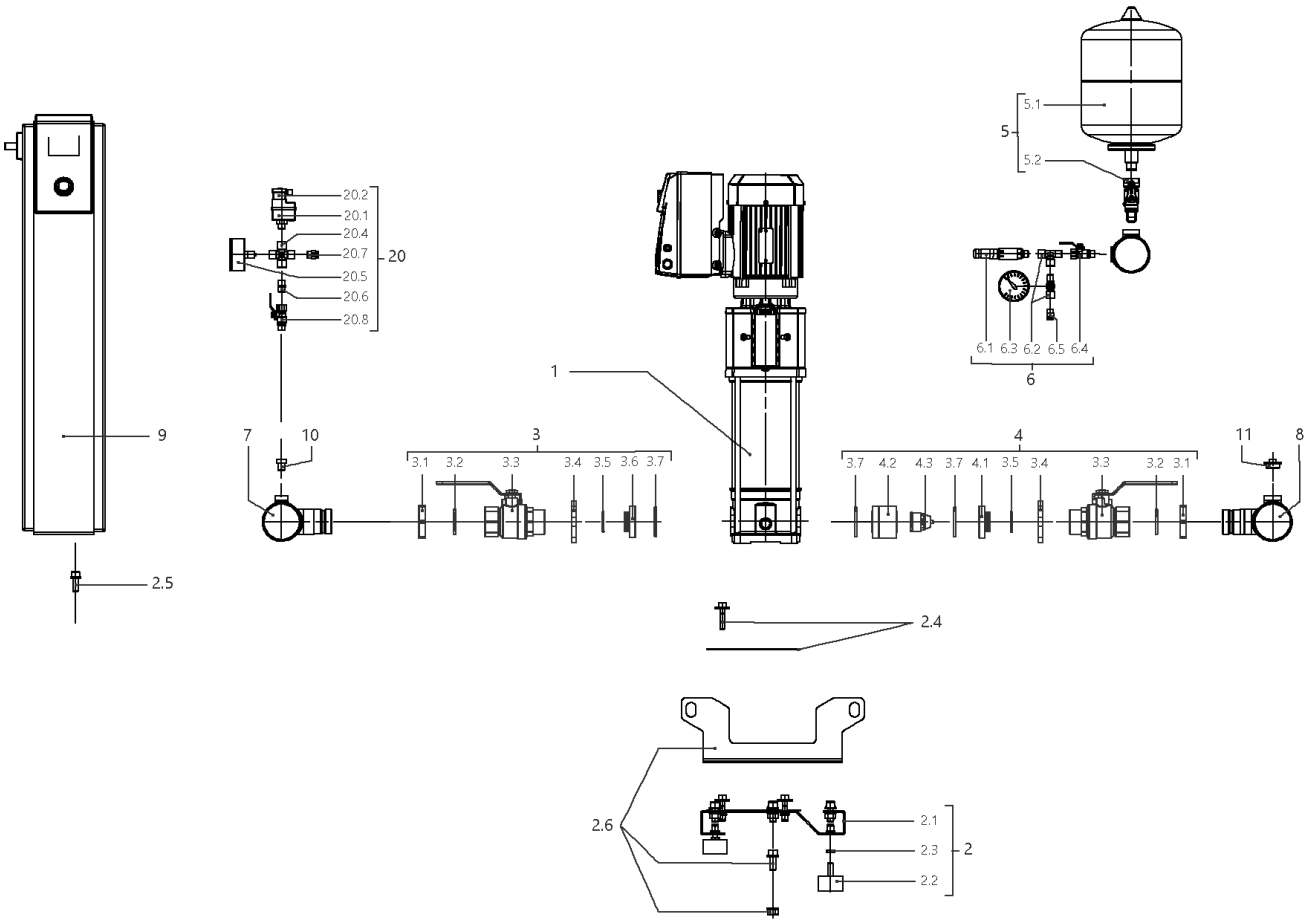
5.1
5
5.2
20.2
20.1
20.4
20.7
20
20.5
20.6
20.8
6.1 6.3 6.2 6.5 6.4
6
1
9
7
10
3
3.1 3.2 3.3 3.4 3.5 3.6 3.7
4
3.7 4.2 4.3 3.7 4.1 3.5 3.4 3.3 3.2 3.1
11
8
2.5
2.4
2.6
2.1
2.3
2
2.2

## SiBoost Smart 3HELIX VE206 (2541589)

| Item | Article no. | Description | Quantity |
|---|---|---|---|
| 1 | | HELIX VE206-1/16/E/S | 1 |
| Note: TO / BIS / JUSQU'AU 29/02/2016 | | | |
| 1 | 4201564 | HELIX VE206-1/16/E/S | 1 |
| Note: FROM / AB / À PARTIR DU 01/03/2016 | | | |
| 2 | 4200137 | BASE PLATE DE3 1150x300 M10 KIT | 1 |
| 2.1 | | > BASEPLATE_3x4/6/10V_E300_1150x300BOX_150 | 1 |
| 2.2 | 2028654 | > VIBRATION DAMPER D.50X30 M10X28 | 1 |
| 2.3 | 2028281 | > NUT M10 DIN936 (ISO4035) 17H VZ | 1 |
| 2.4 | 4199875 | > HOLDER PUMP Siboost Helix V2/4 KIT | 1 |
| 2.5 | 4197084 | > HOLDER SWITCHBOX WILO Smart Control KIT | 1 |
| 2.6 | 4197085 | > LIFTING Siboost HELIX SC KIT | 1 |
| 3 | 4199876 | SUCTION SIDE Siboost Helix V2/4/6 KIT | 1 |
| 3.1 | 2032610 | > NUT G11/4 MS VP. | 1 |
| 3.2 | 2032611 | > O-RING ID.36,09X3,53N DIN3771 E7502 | 1 |
| 3.3 | 2507646 | > BALL VALVE G11/4"M-F-W.HANDLE 1/4-TURN | 1 |
| 3.4 | 2032613 | > SCREWED FLANGE G1 1/4" LK-75 ST37VZ | 1 |
| 3.5 | 2032614 | > O-RING ID.29,82X2,62N DIN3771 E7502 | 1 |
| 3.6 | 2032615 | > SPACER F.I/A KUH.DN32 CUZN | 1 |
| 3.7 | 2032616 | > O-RING ID.44X3,53N DIN3771 E7502 | 1 |
| 4 | 4199877 | DELIVERY SIDE Siboost Helix V2/4/6 KIT | 1 |
| 3.1 | 2032610 | > NUT G11/4 MS VP. | 1 |
| 3.2 | 2032611 | > O-RING ID.36,09X3,53N DIN3771 E7502 | 1 |
| 3.3 | 2507646 | > BALL VALVE G11/4"M-F-W.HANDLE 1/4-TURN | 1 |
| 3.4 | 2032613 | > SCREWED FLANGE G1 1/4" LK-75 ST37VZ | 1 |
| 3.5 | 2032614 | > O-RING ID.29,82X2,62N DIN3771 E7502 | 1 |
| 4.1 | 2058116 | > SPACER F.I/A KUH.DN32 CUZN | 1 |
| 3.7 | 2032616 | > O-RING ID.44X3,53N DIN3771 E7502 | 1 |
| 4.2 | 2058115 | > HOUSING RFV(RV-IN) DN32 SGS/DRS | 1 |
| 4.3 | 2027870 | > NON-RETURN-DEVICE INSERT DN32(MTR) | 1 |
| 5 | 2032642 | DIAPHREM TANK 8L/PN16 DIN4807/T5 KIT | 1 |
| 5.1 | 2045914 | > DIAPHREM TANK 8L TYP-DD 16BAR | 1 |
| 5.2 | 2027853 | > FLOW FITTING G3/4 FOR DIAPHRAGM VES. | 1 |
| 6 | 4197076 | PRESSURE SENSOR/ GAUGE 0-16BAR KIT | 1 |
| 6.1 | 2085909 | > PRESS.SENSOR 1/4" 0-16BAR 4-20MA VP. | 1 |

| Item | Article no. | Description | Quantity |
|---|---|---|---|
| 6.2 | 4197077 | > T-PIECE 1/4" VP. | 1 |
| 6.3 | 2028692 | > PRESSURE GAUGE NG63-PN16-G1/4 | 1 |
| 6.4 | 2028291 | > BALL TAP R1/4" PN42 GIACOMINI R254DL | 1 |
| 6.5 | 2028691 | > BLOWGUN 1/4" MS 30BAR VP. | 1 |
| 7 | 4200147 | PIPE DE4 11/2''-3x11/4"+2x1/4x900 VP. | 1 |
| 8 | 4200148 | PIPE DE4 11/2''-3x11/4"+2x1/4+1x3/4x900 | 1 |
| 9 | | W-CTRL-SCE-B-3x0,55-1,5KW-T4-FM-ND1 | 1 |
| Note: TO / BIS / JUSQU'AU 18/05/2014 | | | |
| 9 | 2541914 | W-CTRL-SCE-B-3x10A-T34-FM-ND1-AVC-PKG | 1 |
| Note: FROM / AB / À PARTIR DU 19/05/2014 | | | |
| 10 | 4197079 | PLUG G1/4"x10 AISI304 KIT | 1 |
| 11 | 2032654 | PLUG R3/4" MS VIEGA 1751 | 1 |
| 20 | | ASSEMBLY WMS. DE-EB. +VP | 1 |
| 20.1 | 2028652 | > PRESSURE SWITCH PS3-ASR 1/(1,3) VP. | 1 |
| 20.2 | 2130983 | > PLUG PS3-415 WITH KABEL 1,5M 2NO VP. | 1 |
| 20.4 | 2028290 | > CROSSPIECE R1/4" MS-NICKEL | 1 |
| 20.5 | 2028687 | > PRESSURE GAUGE NG63 R1/4" HI.0-6BAR | 1 |
| 20.6 | 2054268 | > DUAL NIPPLE G1/4" x G1/4" MS VP. | 1 |
| 20.7 | 2028691 | > BLOWGUN 1/4" MS 30BAR VP. | 1 |
| 20.8 | 2028291 | > BALL TAP R1/4" PN42 GIACOMINI R254DL | 1 |

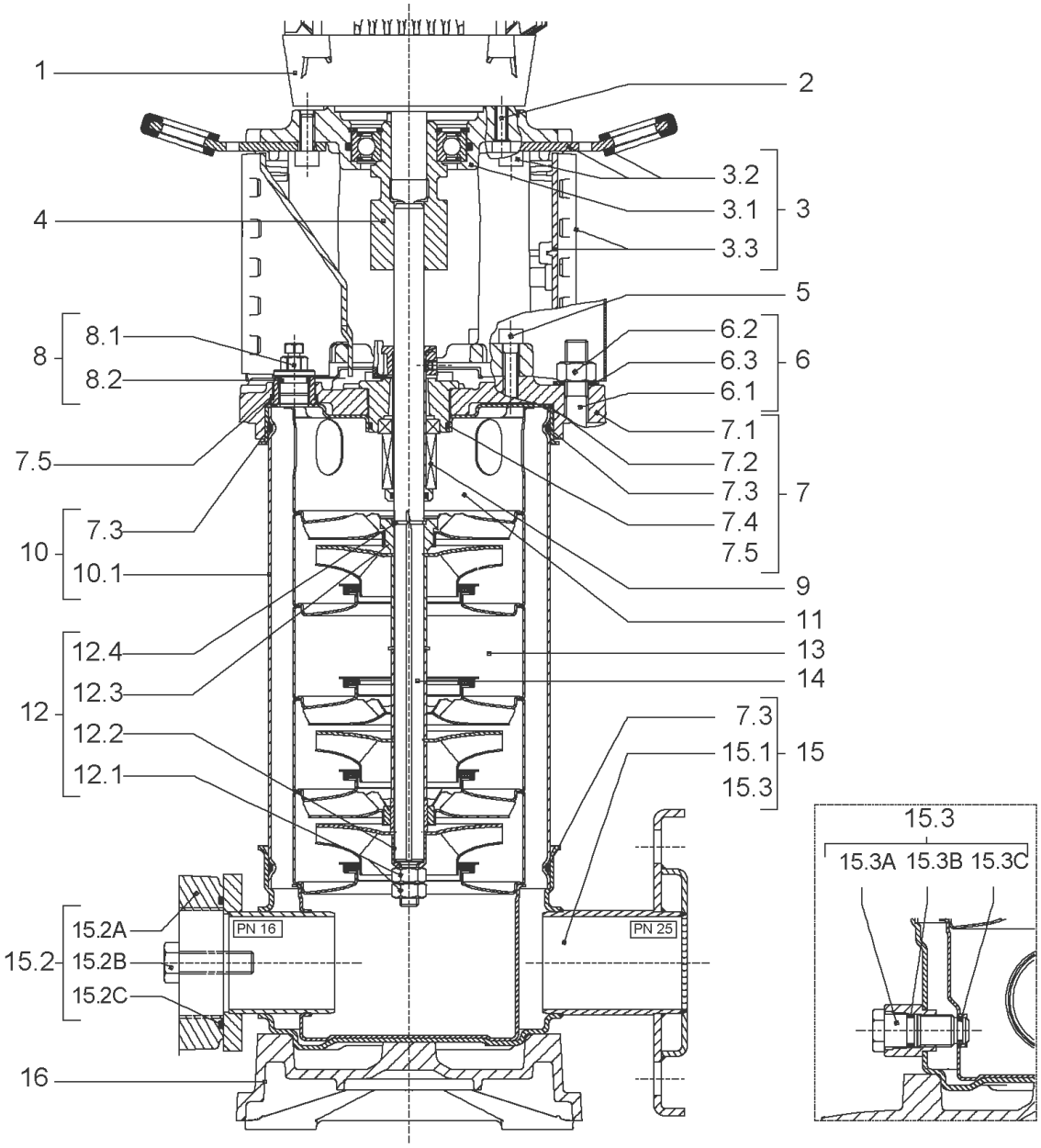
1
2
3.2
3.1
3
3.3
4
5
8.1
8
8.2
6.2
6.3
6
6.1
7.1
7.5
7.2
7.3
7
7.4
7.3
10
7.5
10.1
9
11
12.4
13
12.3
14
12
12.2
7.3
15.1
15
12.1
15.3
15.3
15.3A 15.3B 15.3C
15.2A
PN 16
PN 25
15.2
15.2B
15.2C
16

## HELIX VE206-1/16/E/S

| Item | Article no. | Description | Quantity |
|---|---|---|---|
| 1 | | DRIVE HELIX-VE206-IE2-WE KIT | 1 |
| Note: MOTOR BRAND WILO ELEC | | | |
| 1 | | DRIVE HELIX-VE206-IE4-WE KIT | 1 |
| Note: MOTOR BRAND WILO ELEC | | | |
| 2 | 4159702 | SCREW M6X30 (4 PIECES) | 1 |
| 3 | 4172790 | EQUIPED LANTERN NEXIS FT 100 KIT | 1 |
| 3.1 | | > M+5_6_LANTERN_ONE-PIECE_FT100_CATA | 1 |
| 3.2 | 2127604 | > EYELET CPL.FT HELIX(2 PIECES) | 1 |
| 3.3 | 4159692 | > COUPLING PROTECTOR FT HELIX KIT | 1 |
| 4 | 4178578 | COUPLING D.12XD.19 FT100 KIT | 1 |
| 5 | 4159707 | SCREW M8X30 (4 PIECES) | 1 |
| 6 | 4177817 | STUD BOLT M12X341 KIT | 1 |
| 6.1 | | > TIE BOLT M12-341x18x30-1.4057 | 1 |
| 6.2 | 2094647 | > NUT M12 M12 ISO4032 VP. | 1 |
| 6.3 | 2123557 | > WASHER CS-12.4-24-1.6-NFE25 (4 PIECES) | 1 |
| 7 | 4210143 | STATIONARY RING HOLDER HELIX 6" EPDM | 1 |
| 7.2 | 2127607 | > STATIONARY RING HOLDER 6" HELIX 1.4301 V | 1 |
| 7.3 | 4176513 | > O-RING FOR PUMP JACKET VP. | 1 |
| 7.4 | 2127603 | > O-RING ID.37,6x2,4 EPDM VP. | 1 |
| 7.5 | 2127602 | > O-RING ID.21,35x2 EPDM VP. | 1 |
| 8 | 4159686 | FILING/PURGING PLUG HELIX EPDM KIT | 1 |
| 9 | 4178564 | SEAL-KIT-HELIX2-4 O/E KIT | 1 |
| 10 | 4177818 | HOUSING PIPES Ø152-M+1004-304 KIT | 1 |
| 7.3 | 4176513 | > O-RING FOR PUMP JACKET VP. | 1 |
| 10.1 | | > HOUSING-PIPE Ø152-M+1004/1603-304 | 1 |
| 11 | 4179315 | CENTERING STAGE HELIX V2 1.4307 VP. | 1 |
| 12 | 4178568 | SHAFT EQUIPMENT HELIX V2/V4 KIT | 1 |
| 12.1 | | > NUT-H-M8-STAINLESS-STEEL A4-70 | 2 |
| 12.2 | | > SHAFT END WASHER Ø8/Ø12 316L | 1 |
| 12.3 | | > STOP COLLAR OF IMPELLER M+2/4 SINGLEBLOC | 1 |
| 12.4 | | > STOP-RUSH-1/2-D12xd2-M+316 | 2 |
| 13 | | HYDRAULIC HELIX V 206 1.4307 | 1 |
| 14 | 4178584 | SHAFT D.12X333 1.4301 VP. | 1 |
| 15 | 4174079 | PUMP HOUSING HELIX DN32 PN16 1.4301 KIT | 1 |

| Item | Article no. | Description | Quantity |
|---|---|---|---|
| 7.3 | 4176513 | > O-RING FOR PUMP JACKET VP. | 1 |
| 15.1 | | > BLASTING PPE HOUSING V-PN16-DN32-5"-304 | 1 |
| 15.2 | 4217889 | > COUNTER FLANGE-G1"-PN16-GJL KIT | 1 |
| 15.3 | 4171321 | > PRIMING/DRAIN PLUG EPDM HELIX KIT | 1 |
| 16 | 4177964 | BASEPLATE HELIX V2/4/6 PN16 VP. | 1 |

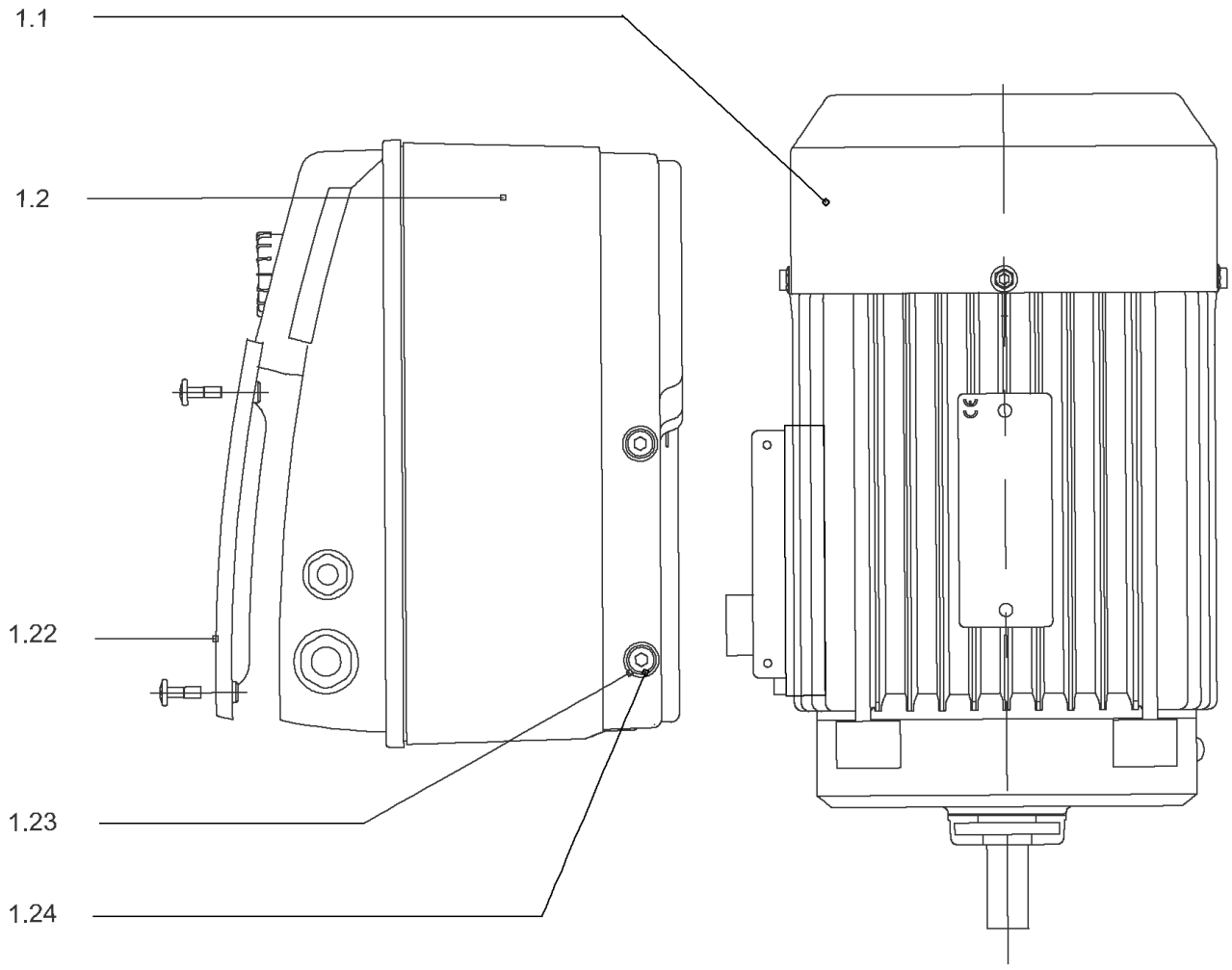
1.1
1.2
1.22
1.23
1.24

## DRIVE HELIX-VE206-IE2-WE KIT

| Item | Article no. | Description | Quantity |
|---|---|---|---|
| 1.1 | | MOTOR 0,75/2/80 3~ 380V 60HZ IE2 WE VP. | 1 |
| Note: no longer available/nicht mehrlieferbar/n'est plus disponible | | | |
| | | SPARE PARTS MOTOR:ON REQUEST | 1 |
| 1.2 | 4184863 | MODULE HELIX-VE206-IE2-WE KIT | 1 |
| 1.22 | 2054372 | > MODULE COVER TL1,TL2+GASKET KIT | 1 |
| 1.23 | 4215716 | > SCREW M5X16 DIN912 8.8 A2A (4pieces) VP. | 1 |
| 1.24 | 2057978 | > RONDELLE A5,3 DIN6797 FST ZN (4 PIECES) | 1 |

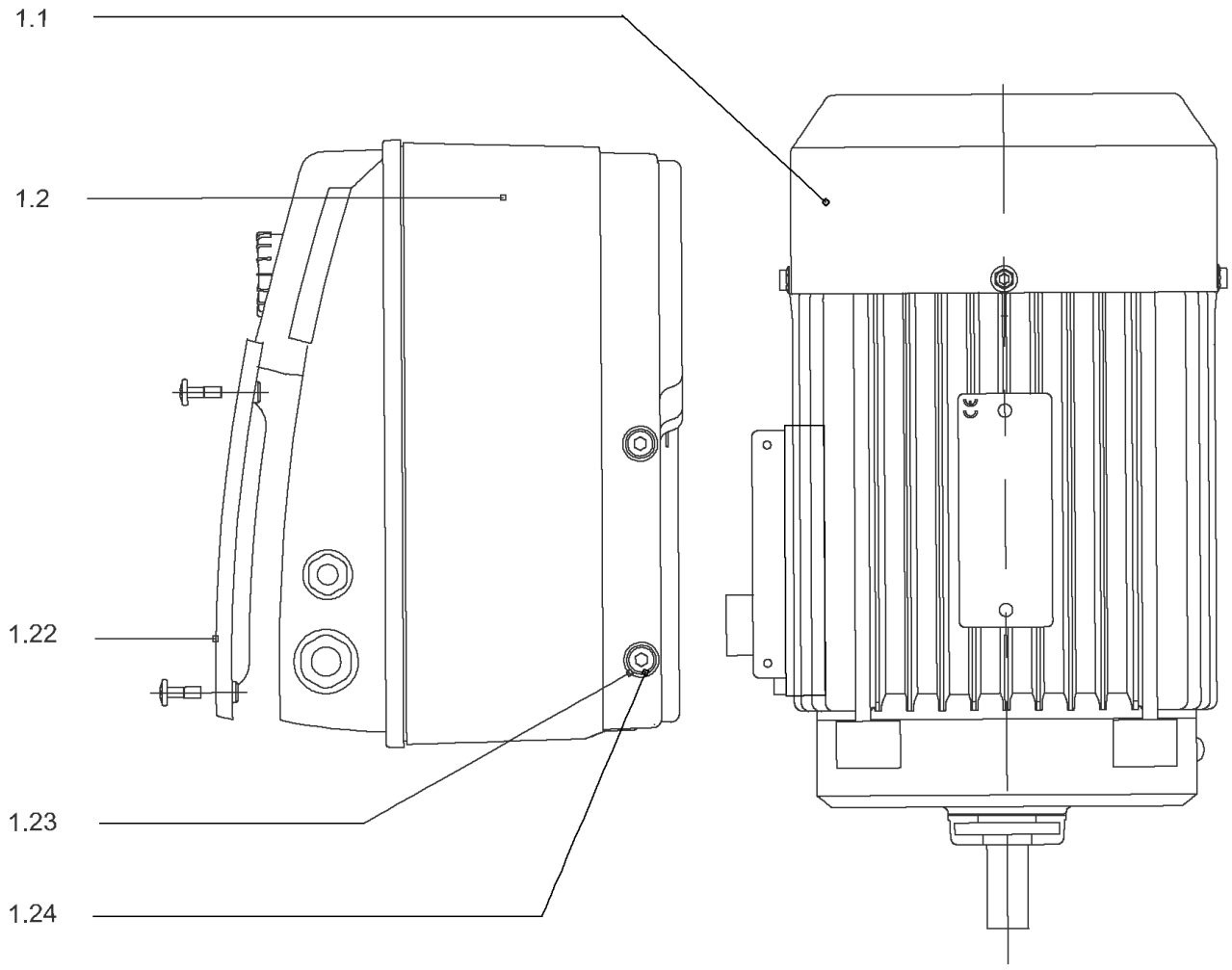
1.1
1.2
1.22
1.23
1.24

## DRIVE HELIX-VE206-IE4-WE KIT

| Item | Article no. | Description | Quantity |
|---|---|---|---|
| 1.1 | 4207914 | MOTOR 0.75/2/80 3~ 380V 60HZ IE4 WE VP. | 1 |
| | | SPARE PARTS MOTOR:ON REQUEST | 1 |
| 1.2 | 4209321 | MODULE HELIX-VE206-IE4-WE KIT | 1 |
| 1.22 | 2054372 | > MODULE COVER TL1,TL2+GASKET KIT | 1 |
| 1.23 | 4215716 | > SCREW M5X16 DIN912 8.8 A2A (4pieces) VP. | 1 |
| 1.24 | 2057978 | > RONDELLE A5,3 DIN6797 FST ZN (4 PIECES) | 1 |

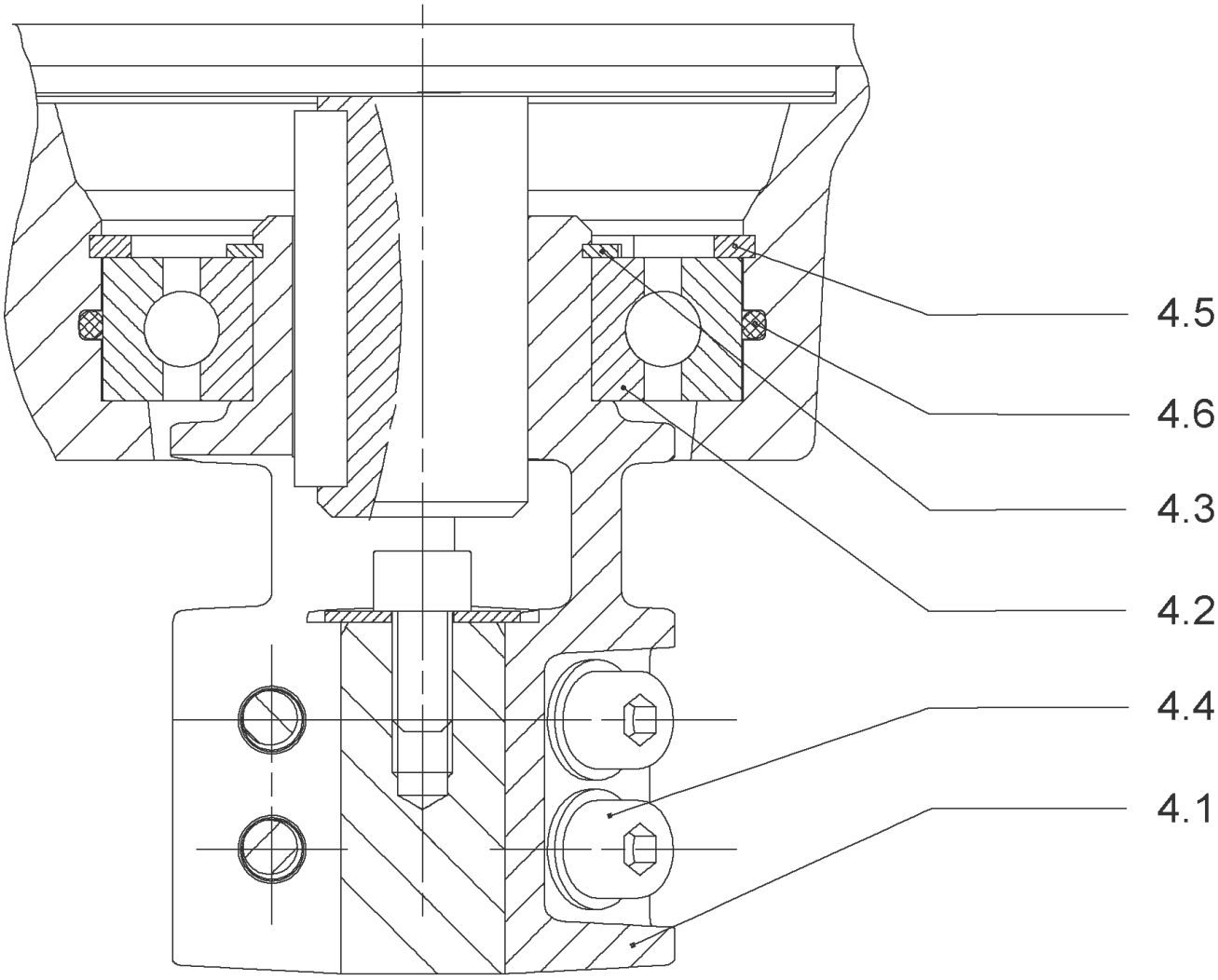
4.5
4.6
4.3
4.2
4.4
4.1

## COUPLING D.12XD.19 FT100 KIT (4178578)

| Item | Article no. | Description | Quantity |
|---|---|---|---|
| 4.1 | | COUPLING-M+ Ø12XØ19-FT100-MACHINED | 1 |
| 4.3 | 4234249 | CIRCLIP-FOR-SHAFT-D30x1.5 VP. | 1 |
| 4.2 | 2130977 | BALL BEARING 6206/ZZ-C3(HT)VP. | 1 |
| 4.4 | 4212716 | SCREW M6X20 KIT (4PIECES) | 1 |
| 4.5 | 4234250 | CIRCLIP-D62x2 VP. | 1 |
| 4.6 | 4234245 | O-RING 63X3 VP. | 1 |
| | | CONTACT-WASHER-6ETR-6,1x12,2x1,8-STEEL | 4 |

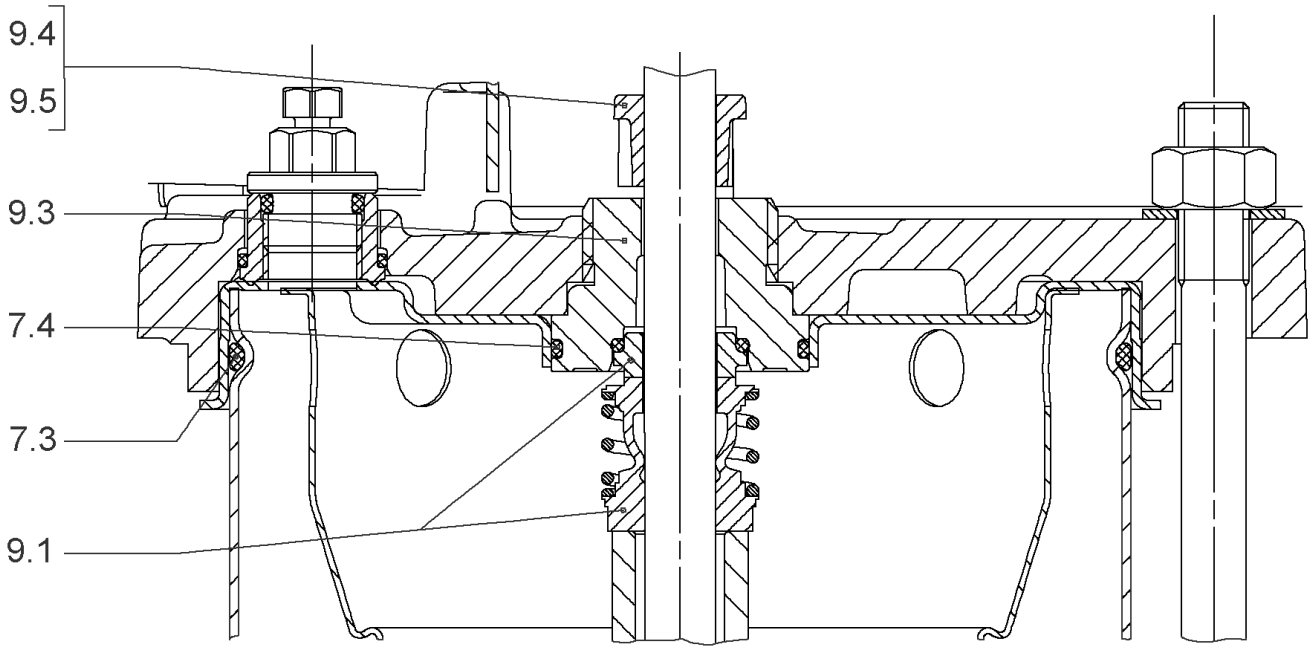
9.4
9.5
9.3
7.4
7.3
9.1

## SEAL-KIT-HELIX2-4 O/E KIT (4178564)

| Item | Article no. | Description | Quantity |
|---|---|---|---|
| 7.3 | 4176513 | O-RING FOR PUMP JACKET VP. | 1 |
| 7.4 | 2127603 | O-RING ID.37,6x2,4 EPDM VP. | 1 |
| 9.1 | 4178563 | M.SEAL.HELIX2-4 O/E VP. | 1 |
| 9.3 | 4178561 | RING HOLDER Ø22 1.4301 VP. | 1 |
| 9.5 | 4178562 | DRIVE RING D.22/12.2X10 MACH.VP. | 1 |
| 9.4 | 4176520 | SCREW CH M5x5 A4-70 ( 3PIECES ) | 1 |

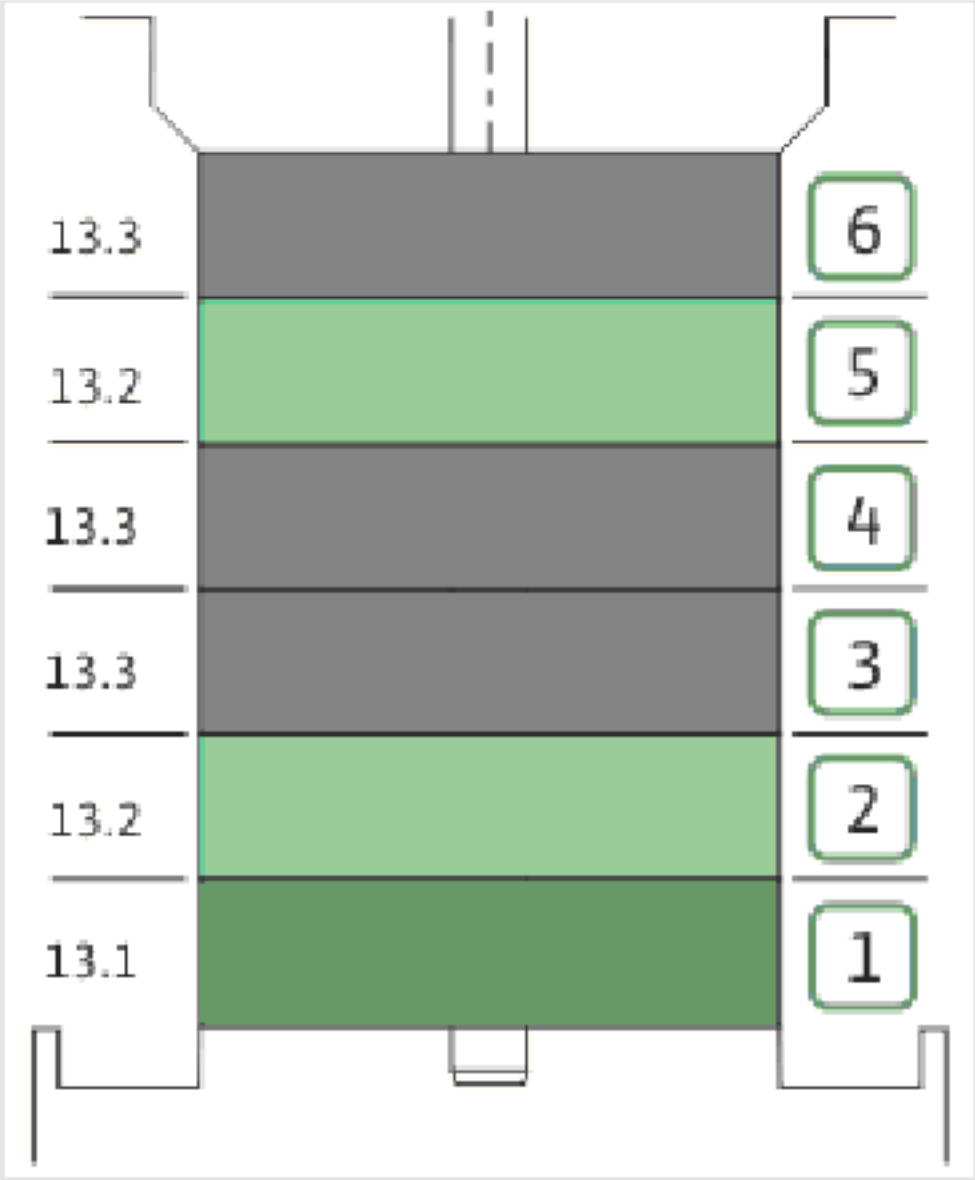
13.3
13.2
13.3
13.3
13.2
13.1
6
5
4
3
2
1

| Item | Article no. | Description | Quantity |
|---|---|---|---|
| 13.1 | 4179316 | STAGE HELIX 2 1.4301 KIT | 1 |
| | | > MACH.STG-CASING-WOGV-WNR-M+2-4-304 | 1 |
| | | > IMPELLER-M+2-304 | 1 |
| 13.2 | 4179317 | STAGE BEARING HELIX 2 1.4307 KIT | 1 |
| | | > MACH.BEARING-STG-CASING-WNR-M+2-304 | 1 |
| | | > IMPELLER-M+2-304 | 1 |
| | | > SHAFT SLEEVE SPACER Ø15,35x10,305-304 | 1 |
| | | > SHAFT-SLEEVE-D12xD16x14-CW | 1 |
| 13.3 | 4179319 | INTERMEDIATE STAGE HELIX 2 1.4301 KIT | 1 |
| | | > CORPS-ETG-STD-ACR-AJR-USIN.M+2-304 | 1 |
| | | > IMPELLER-M+2-304 | 1 |
| | | > IMPELLER SPACER Ø12,05X14,85-L24,285-304 | 1 |

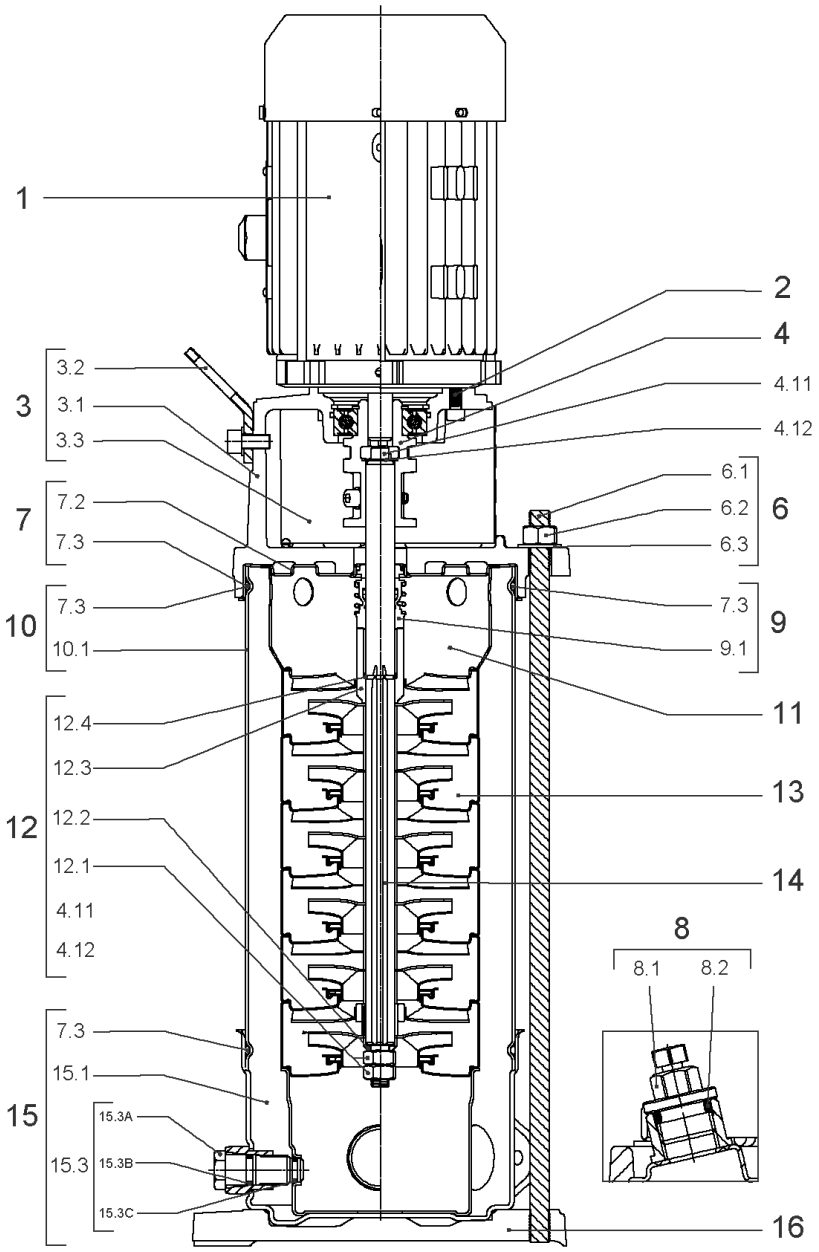
1
2
4
4.11
4.12
3
3.2
3.1
3.3
7
7.2
7.3
6
6.1
6.2
6.3
10
7.3
10.1
9
7.3
9.1
11
12
12.4
12.3
12.2
12.1
4.11
4.12
13
14
8
8.1
8.2
15
7.3
15.1
15.3
15.3A
15.3B
15.3C
16

## HELIX VE206-1/16/E/S (4201564)

| Item | Article no. | Description | Quantity |
|---|---|---|---|
| 1 | | DRIVE HELIX-VE206-IE4-WE KIT | 1 |
| Note: MOTOR BRAND WILO ELEC | | | |
| | | SPARE PARTS MOTOR:ON REQUEST | 1 |
| 2 | 4212716 | SCREW M6X20 KIT (4PIECES) | 1 |
| 3 | 4213752 | LANTERN FT100 HELIX KIT | 1 |
| 3.1 | | > LANT-MOT-VMI-ReDTC6"-FT100-MACHINED+CATA | 1 |
| 3.2 | 4184852 | > EYELET CPL.FT HELIX (2 PIECES) | 1 |
| 3.3 | 4213713 | > COUPLING PROTECTOR FT85/100 HELIX KIT | 1 |
| 4 | 4178578 | COUPLING D.12XD.19 FT100 KIT | 1 |
| 6 | 4177817 | STUD BOLT M12X341 KIT | 1 |
| 6.1 | | > TIE BOLT M12-341x18x30-1.4057 | 1 |
| 6.2 | 2094647 | > NUT M12 M12 ISO4032 VP. | 1 |
| 6.3 | 2123557 | > WASHER CS-12.4-24-1.6-NFE25 (4 PIECES) | 1 |
| 7 | 4212722 | STATIONARY RING HOLDER HELIX D23 ReDTC | 1 |
| 7.2 | 4212720 | > STATIONARY RING HOLDER HELIX D23 VP. | 1 |
| 7.3 | 4176513 | > O-RING FOR PUMP JACKET VP. | 1 |
| 8 | 4212724 | FILING/PURGING PLUG HELIX ReDTC KIT | 1 |
| 8.1 | | > FILLING PLUG MVI6"-304 | 1 |
| 8.2 | 4177800 | > O-RING EPDM PLUG HELIX VP. | 1 |
| 9 | 4212726 | MECH.SEAL HELIX V2/4 O/E ReDTC KIT | 1 |
| 9.1 | 4178563 | > M.SEAL.HELIX2-4 O/E VP. | 1 |
| 7.3 | 4176513 | > O-RING FOR PUMP JACKET VP. | 1 |
| 10 | 2127575 | HOUSING PIPE D.152x210 1.4301 KIT | 1 |
| 11 | 4179315 | CENTERING STAGE HELIX V2 1.4307 VP. | 1 |
| 12 | 4212729 | SHAFT EQUIPMENT HELIX V2/4 ReDTC KIT | 1 |
| 12.1 | | > NUT-H-M8-STAINLESS-STEEL A4-70 | 1 |
| 12.2 | | > SHAFT END WASHER Ø8/Ø12 316L | 1 |
| 12.3 | | > 1/2-SNAP-RING-2/4M3-316L | 1 |
| 12.4 | | > STOP-RUSH-1/2-D12xd2-M+316 | 1 |
| 4.11 | | > SCREW CHC-M6X14-8.8-ISO4762-GEOMET500A | 1 |
| 4.12 | | > WASHER D.24 L6U ZINK | 1 |
| 13 | | HYDRAULIC HELIX V 206 1.4307 | 1 |
| 14 | 4213748 | SHAFT D.12X281 HELIX 1.4057 VP. | 1 |
| 15 | 4174079 | PUMP HOUSING HELIX DN32 PN16 1.4301 KIT | 1 |

| Item | Article no. | Description | Quantity |
|---|---|---|---|
| 7.3 | 4176513 | > O-RING FOR PUMP JACKET VP. | 1 |
| 15.1 | | > BLASTING PPE HOUSING V-PN16-DN32-5"-304 | 1 |
| 15.2 | 4217889 | > COUNTER FLANGE-G1"-PN16-GJL KIT | 1 |
| 15.3 | 4171321 | > PRIMING/DRAIN PLUG EPDM HELIX KIT | 1 |
| 16 | 4177964 | BASEPLATE HELIX V2/4/6 PN16 VP. | 1 |

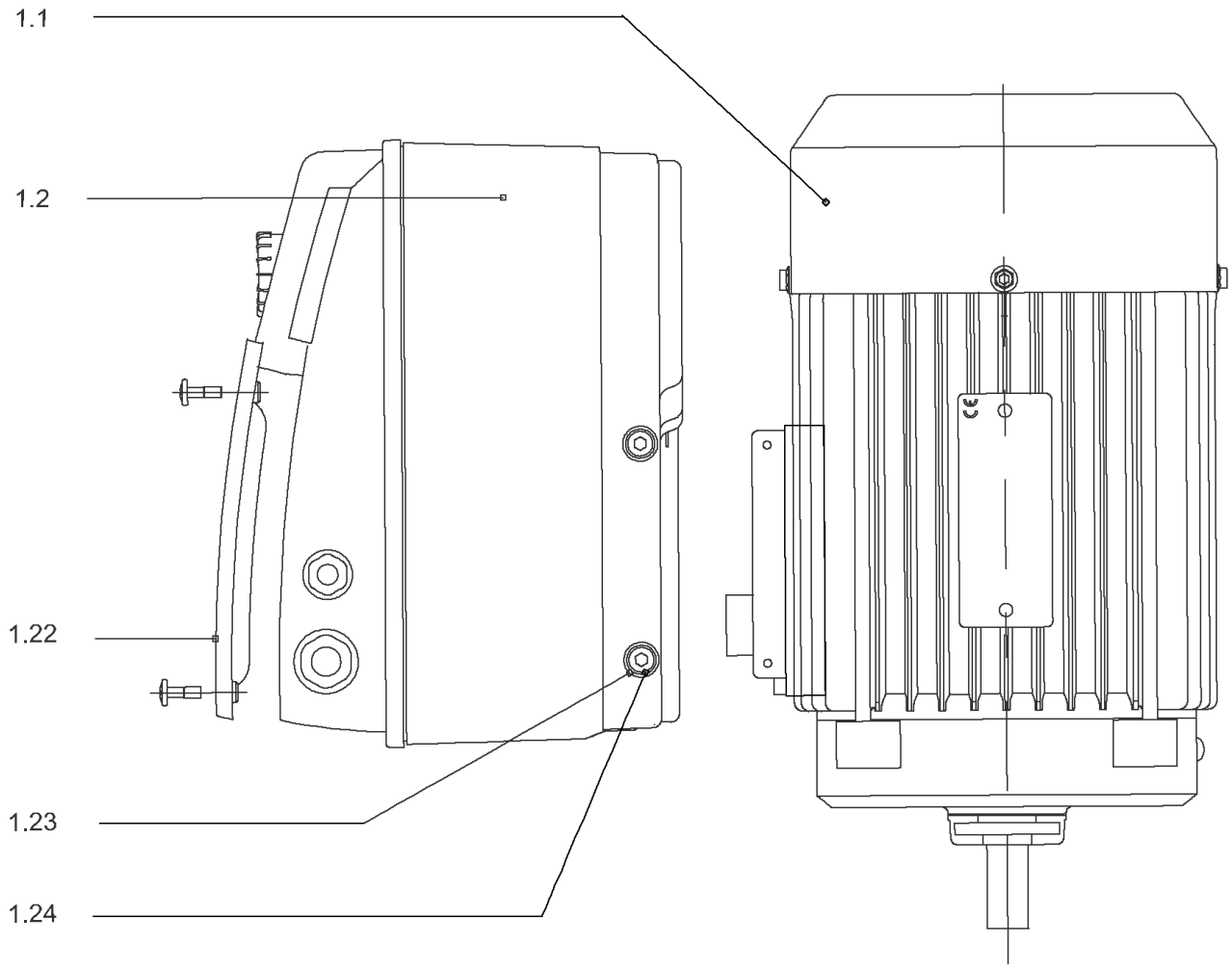
1.1
1.2
1.22
1.23
1.24

## DRIVE HELIX-VE206-IE4-WE KIT

| Item | Article no. | Description | Quantity |
|---|---|---|---|
| 1.1 | 4207914 | MOTOR 0.75/2/80 3~ 380V 60HZ IE4 WE VP. | 1 |
| | | SPARE PARTS MOTOR:ON REQUEST | 1 |
| 1.2 | 4209321 | MODULE HELIX-VE206-IE4-WE KIT | 1 |
| 1.22 | 2054372 | > MODULE COVER TL1,TL2+GASKET KIT | 1 |
| 1.23 | 4215716 | > SCREW M5X16 DIN912 8.8 A2A (4pieces) VP. | 1 |
| 1.24 | 2057978 | > RONDELLE A5,3 DIN6797 FST ZN (4 PIECES) | 1 |

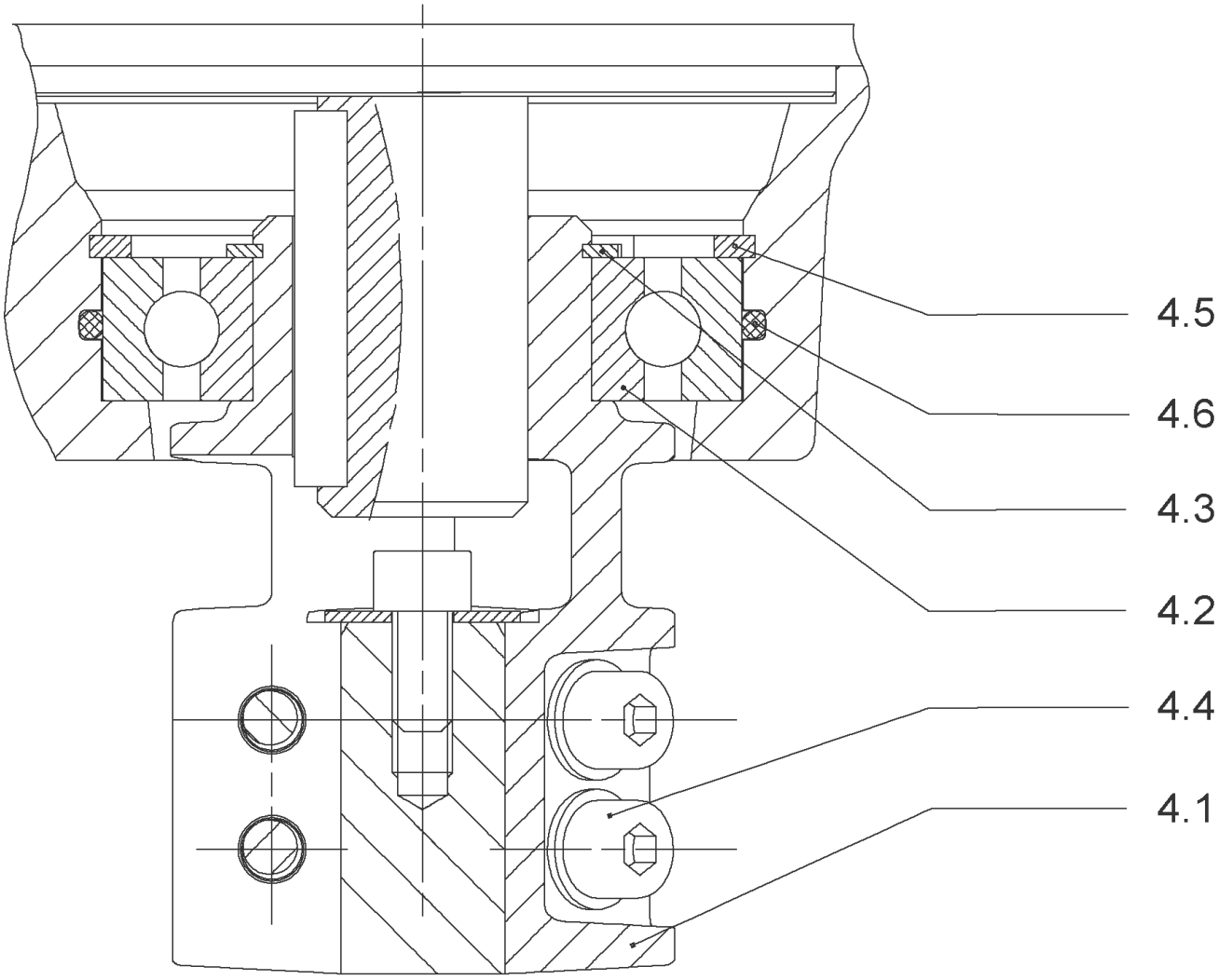
4.5
4.6
4.3
4.2
4.4
4.1

## COUPLING D.12XD.19 FT100 KIT (4178578)

| Item | Article no. | Description | Quantity |
|---|---|---|---|
| 4.1 | | COUPLING-M+ Ø12XØ19-FT100-MACHINED | 1 |
| 4.3 | 4234249 | CIRCLIP-FOR-SHAFT-D30x1.5 VP. | 1 |
| 4.2 | 2130977 | BALL BEARING 6206/ZZ-C3(HT)VP. | 1 |
| 4.4 | 4212716 | SCREW M6X20 KIT (4PIECES) | 1 |
| 4.5 | 4234250 | CIRCLIP-D62x2 VP. | 1 |
| 4.6 | 4234245 | O-RING 63X3 VP. | 1 |
| | | CONTACT-WASHER-6ETR-6,1x12,2x1,8-STEEL | 4 |

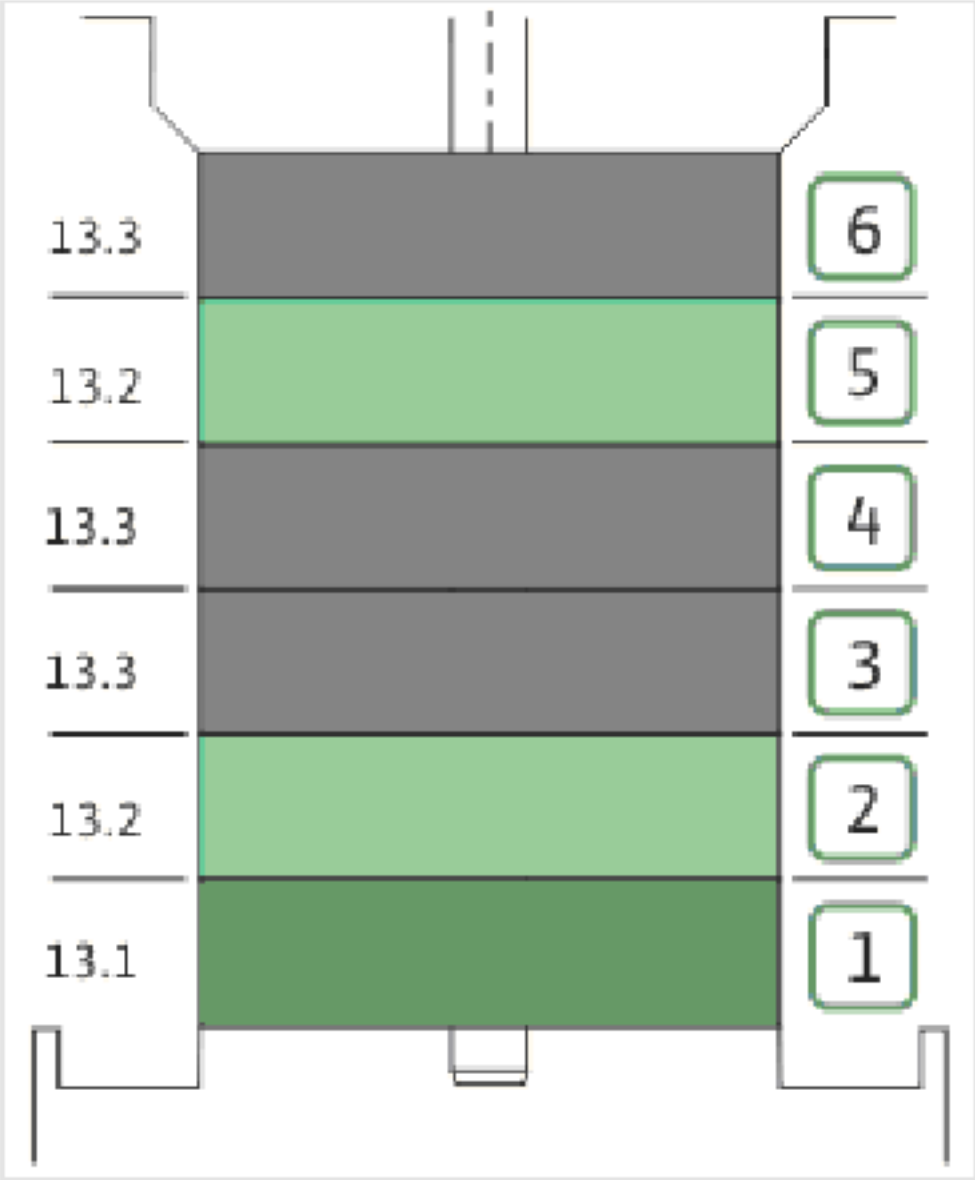
13.3
13.2
13.3
13.3
13.2
13.1
6
5
4
3
2
1

| Item | Article no. | Description | Quantity |
|---|---|---|---|
| 13.1 | 4179316 | STAGE HELIX 2 1.4301 KIT | 1 |
| | | > MACH.STG-CASING-WOGV-WNR-M+2-4-304 | 1 |
| | | > IMPELLER-M+2-304 | 1 |
| 13.2 | 4179317 | STAGE BEARING HELIX 2 1.4307 KIT | 1 |
| | | > MACH.BEARING-STG-CASING-WNR-M+2-304 | 1 |
| | | > IMPELLER-M+2-304 | 1 |
| | | > SHAFT SLEEVE SPACER Ø15,35x10,305-304 | 1 |
| | | > SHAFT-SLEEVE-D12xD16x14-CW | 1 |
| 13.3 | 4179319 | INTERMEDIATE STAGE HELIX 2 1.4301 KIT | 1 |
| | | > CORPS-ETG-STD-ACR-AJR-USIN.M+2-304 | 1 |
| | | > IMPELLER-M+2-304 | 1 |
| | | > IMPELLER SPACER Ø12,05X14,85-L24,285-304 | 1 |

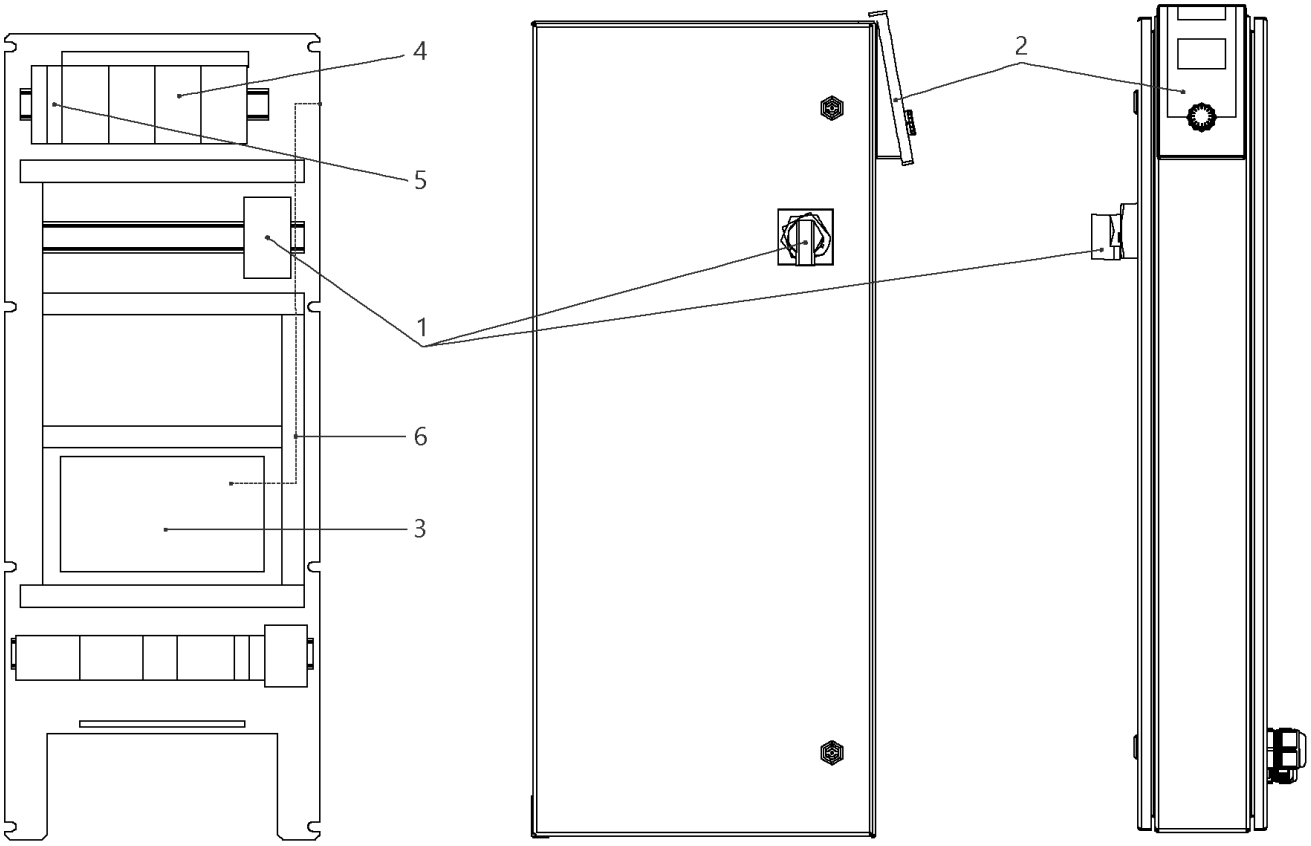
4
5
1
6
3
2

## W-CTRL-SCE-B-3x0,55-1,5KW-T4-FM-ND1

| Item | Article no. | Description | Quantity |
|---|---|---|---|
| 1 | 2104470 | MAIN SWITCH OT40F3 L250 KIT | 1 |
| 2 | 4184784 | CONTROL PANEL HMI SC KIT | 1 |
| 2 | 4185259 | ASSEMBLY DISPLAY SC PKG VP. | 1 |
| 3 | 4185257 | ASSEMBLY CPU SCe Booster VP. | 1 |
| 4 | 2051217 | AUTOM.CIRCUIT BREAKER S203 B16 TO7,5kW | 1 |
| 5 | 2046288 | CIRCUIT BREAKER S201 B16 | 1 |
| 6 | 4197081 | CABLE RJ45 CAT6 0,5M RED SC-PANEL VP. | 1 |

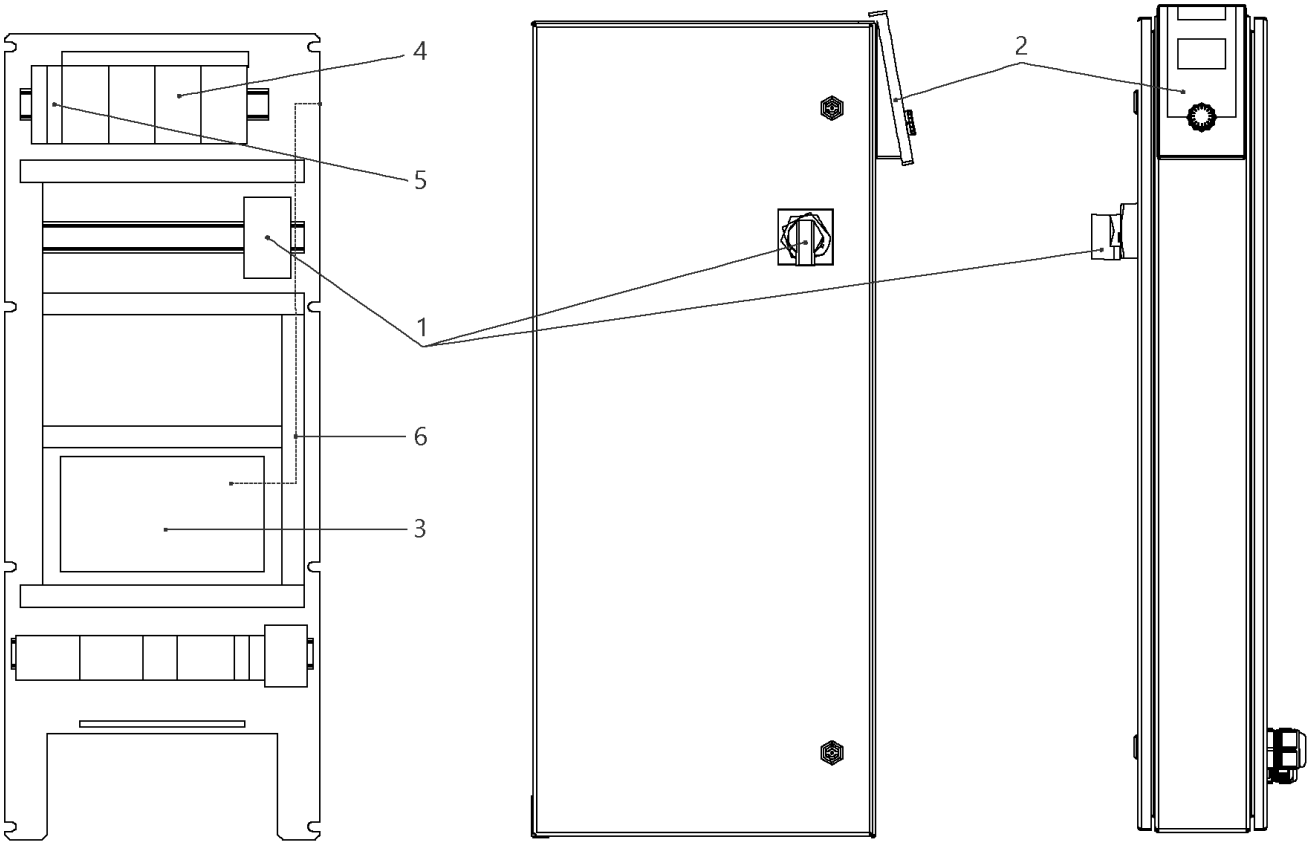
4
5
1
6
3
2

## W-CTRL-SCE-B-3x10A-T34-FM-ND1-AVC-PKG (2541914)

| Item | Article no. | Description | Quantity |
|---|---|---|---|
| 1 | 2104473 | MAIN SWITCH OT63F3 L105 KIT | 1 |
| Note: TO / BIS / JUSQU'AU 30/06/2015 | | | |
| 1 | 2104470 | MAIN SWITCH OT40F3 L250 KIT | 1 |
| Note: FROM / AB / À PARTIR DU 01/07/2015 | | | |
| 2 | 4184784 | CONTROL PANEL HMI SC KIT | 1 |
| 2 | 4185259 | ASSEMBLY DISPLAY SC PKG VP. | 1 |
| Note: DISPLAY ALONE / PLATINE SEULE | | | |
| 3 | 4185257 | ASSEMBLY CPU SCe Booster VP. | 1 |
| 4 | 2119861 | AUTOMATIC CIRCUIT BREAKER S203 B13 3POL. | 1 |
| 5 | 2046288 | CIRCUIT BREAKER S201 B16 | 1 |
| 6 | 4197081 | CABLE RJ45 CAT6 0,5M RED SC-PANEL VP. | 1 |

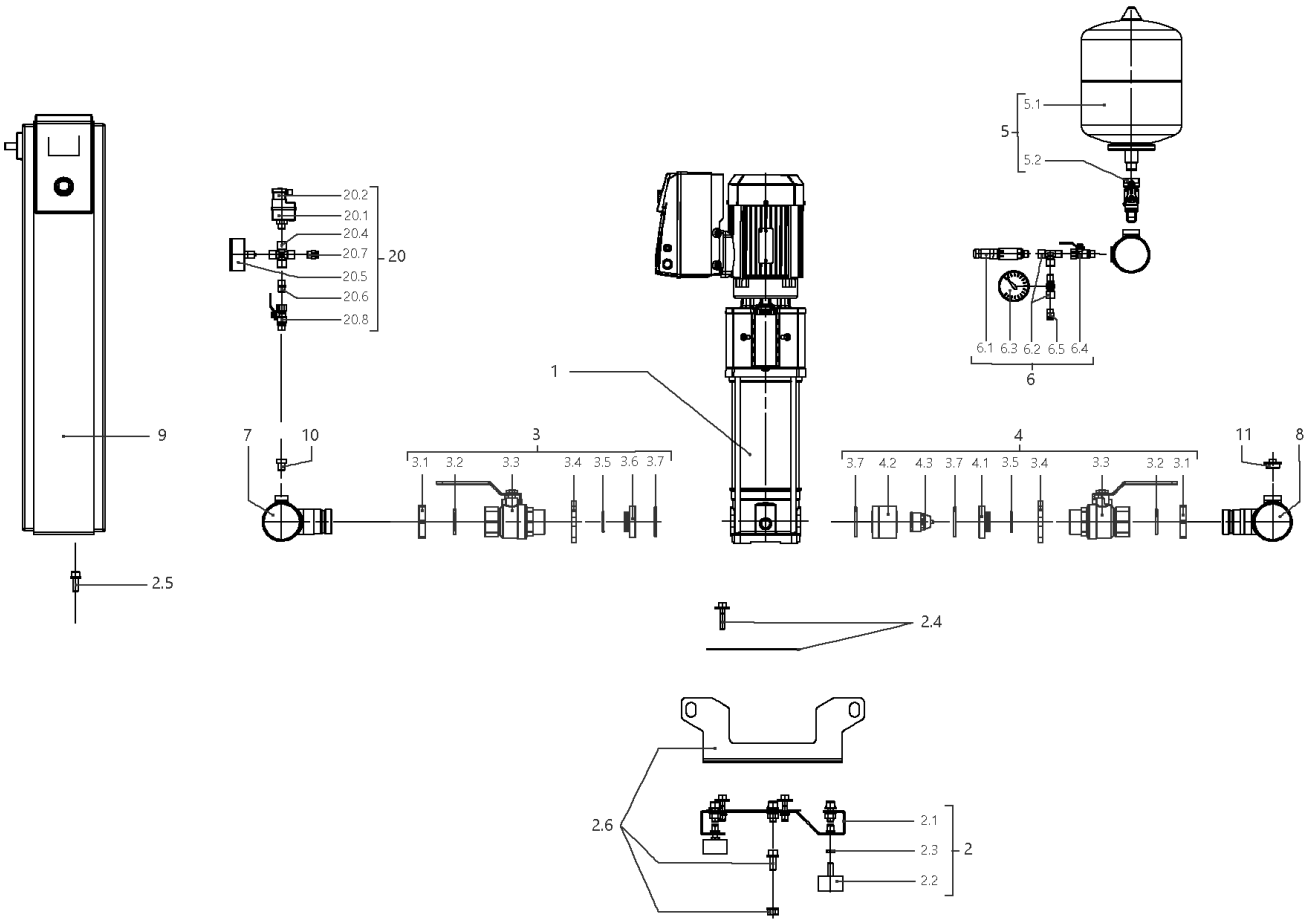
5.1
5
5.2
20.2
20.1
20.4
20.7
20
20.5
20.6
20.8
6.1 6.3 6.2 6.5 6.4
6
1
9
7
10
3
3.1 3.2 3.3 3.4 3.5 3.6 3.7
4
3.7 4.2 4.3 3.7 4.1 3.5 3.4 3.3 3.2 3.1
11
8
2.5
2.4
2.6
2.1
2.3
2
2.2

## SiBoost Smart 3HELIX VE208 (2541590)

| Item | Article no. | Description | Quantity |
|---|---|---|---|
| 1 | | HELIX VE208-1/16/E/S | 1 |
| Note: TO / BIS / JUSQU'AU 29/02/201 | | | |
| 1 | 4201565 | HELIX VE208-1/16/E/S | 1 |
| Note: FROM / AB / À PARTIR DU 01/03/2016 | | | |
| 2 | 4200137 | BASE PLATE DE3 1150x300 M10 KIT | 1 |
| 2.1 | | > BASEPLATE_3x4/6/10V_E300_1150x300BOX_150 | 1 |
| 2.2 | 2028654 | > VIBRATION DAMPER D.50X30 M10X28 | 1 |
| 2.3 | 2028281 | > NUT M10 DIN936 (ISO4035) 17H VZ | 1 |
| 2.4 | 4199875 | > HOLDER PUMP Siboost Helix V2/4 KIT | 1 |
| 2.5 | 4197084 | > HOLDER SWITCHBOX WILO Smart Control KIT | 1 |
| 2.6 | 4197085 | > LIFTING Siboost HELIX SC KIT | 1 |
| 3 | 4199876 | SUCTION SIDE Siboost Helix V2/4/6 KIT | 1 |
| 3.1 | 2032610 | > NUT G11/4 MS VP. | 1 |
| 3.2 | 2032611 | > O-RING ID.36,09X3,53N DIN3771 E7502 | 1 |
| 3.3 | 2507646 | > BALL VALVE G11/4"M-F-W.HANDLE 1/4-TURN | 1 |
| 3.4 | 2032613 | > SCREWED FLANGE G1 1/4" LK-75 ST37VZ | 1 |
| 3.5 | 2032614 | > O-RING ID.29,82X2,62N DIN3771 E7502 | 1 |
| 3.6 | 2032615 | > SPACER F.I/A KUH.DN32 CUZN | 1 |
| 3.7 | 2032616 | > O-RING ID.44X3,53N DIN3771 E7502 | 1 |
| 4 | 4199877 | DELIVERY SIDE Siboost Helix V2/4/6 KIT | 1 |
| 3.1 | 2032610 | > NUT G11/4 MS VP. | 1 |
| 3.2 | 2032611 | > O-RING ID.36,09X3,53N DIN3771 E7502 | 1 |
| 3.3 | 2507646 | > BALL VALVE G11/4"M-F-W.HANDLE 1/4-TURN | 1 |
| 3.4 | 2032613 | > SCREWED FLANGE G1 1/4" LK-75 ST37VZ | 1 |
| 3.5 | 2032614 | > O-RING ID.29,82X2,62N DIN3771 E7502 | 1 |
| 4.1 | 2058116 | > SPACER F.I/A KUH.DN32 CUZN | 1 |
| 3.7 | 2032616 | > O-RING ID.44X3,53N DIN3771 E7502 | 1 |
| 4.2 | 2058115 | > HOUSING RFV(RV-IN) DN32 SGS/DRS | 1 |
| 4.3 | 2027870 | > NON-RETURN-DEVICE INSERT DN32(MTR) | 1 |
| 5 | 2032642 | DIAPHREM TANK 8L/PN16 DIN4807/T5 KIT | 1 |
| 5.1 | 2045914 | > DIAPHREM TANK 8L TYP-DD 16BAR | 1 |
| 5.2 | 2027853 | > FLOW FITTING G3/4 FOR DIAPHRAGM VES. | 1 |
| 6 | 4197076 | PRESSURE SENSOR/ GAUGE 0-16BAR KIT | 1 |
| 6.1 | 2085909 | > PRESS.SENSOR 1/4" 0-16BAR 4-20MA VP. | 1 |

| Item | Article no. | Description | Quantity |
|---|---|---|---|
| 6.2 | 4197077 | > T-PIECE 1/4" VP. | 1 |
| 6.3 | 2028692 | > PRESSURE GAUGE NG63-PN16-G1/4 | 1 |
| 6.4 | 2028291 | > BALL TAP R1/4" PN42 GIACOMINI R254DL | 1 |
| 6.5 | 2028691 | > BLOWGUN 1/4" MS 30BAR VP. | 1 |
| 7 | 4200147 | PIPE DE4 11/2''-3x11/4"+2x1/4x900 VP. | 1 |
| 8 | 4200148 | PIPE DE4 11/2''-3x11/4"+2x1/4+1x3/4x900 | 1 |
| 9 | | W-CTRL-SCE-B-3x0,55-1,5KW-T4-FM-ND1 | 1 |
| Note: TO / BIS / JUSQU'AU 18/05/2014 | | | |
| 9 | 2541914 | W-CTRL-SCE-B-3x10A-T34-FM-ND1-AVC-PKG | 1 |
| Note: FROM / AB / À PARTIR DU 19/05/2014 | | | |
| 10 | 4197079 | PLUG G1/4"x10 AISI304 KIT | 1 |
| 11 | 2032654 | PLUG R3/4" MS VIEGA 1751 | 1 |
| 20 | | ASSEMBLY WMS. DE-EB. +VP | 1 |
| 20.1 | 2028652 | > PRESSURE SWITCH PS3-ASR 1/(1,3) VP. | 1 |
| 20.2 | 2130983 | > PLUG PS3-415 WITH KABEL 1,5M 2NO VP. | 1 |
| 20.4 | 2028290 | > CROSSPIECE R1/4" MS-NICKEL | 1 |
| 20.5 | 2028687 | > PRESSURE GAUGE NG63 R1/4" HI.0-6BAR | 1 |
| 20.6 | 2054268 | > DUAL NIPPLE G1/4" x G1/4" MS VP. | 1 |
| 20.7 | 2028691 | > BLOWGUN 1/4" MS 30BAR VP. | 1 |
| 20.8 | 2028291 | > BALL TAP R1/4" PN42 GIACOMINI R254DL | 1 |

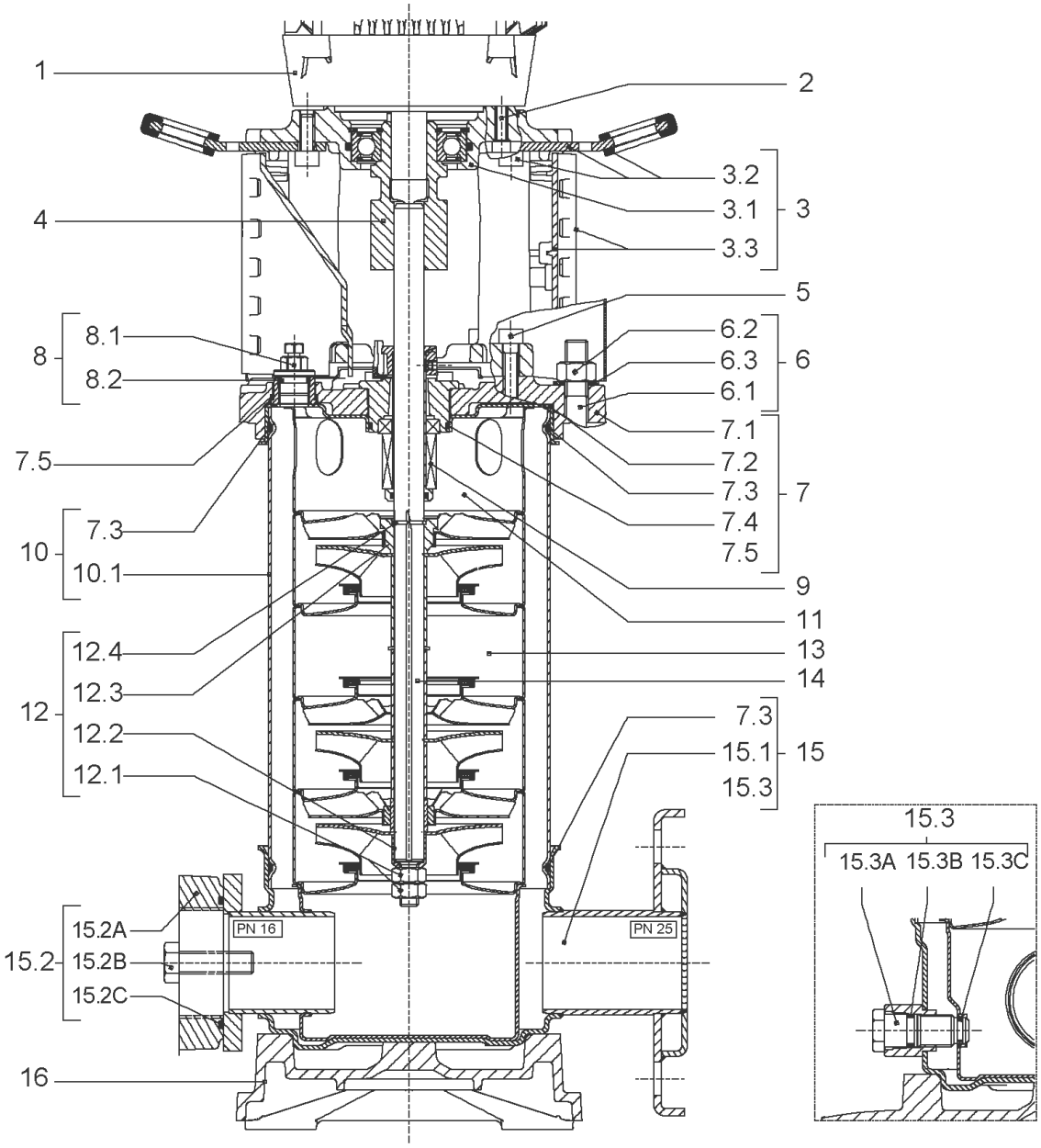
1
2
3.2
3.1
3
3.3
4
5
8.1
8
8.2
6.2
6.3
6
6.1
7.1
7.5
7.2
7.3
7
7.4
7.3
10
7.5
10.1
9
11
12.4
13
12.3
14
12
12.2
7.3
15.1
15
12.1
15.3
15.3
15.3A 15.3B 15.3C
15.2A
PN 16
PN 25
15.2
15.2B
15.2C
16

| Item | Article no. | Description | Quantity |
|---|---|---|---|
| 1 | | DRIVE HELIX-VE208-IE2-WE KIT | 1 |
| Note: MOTOR BRAND WILO ELEC | | | |
| 1 | | DRIVE HELIX-VE208-IE4-WE KIT | 1 |
| Note: MOTOR BRAND WILO ELEC | | | |
| 2 | 4159702 | SCREW M6X30 (4 PIECES) | 1 |
| 3 | 4172790 | EQUIPED LANTERN NEXIS FT 100 KIT | 1 |
| 3.1 | | > M+5_6_LANTERN_ONE-PIECE_FT100_CATA | 1 |
| 3.2 | 2127604 | > EYELET CPL.FT HELIX(2 PIECES) | 1 |
| 3.3 | 4159692 | > COUPLING PROTECTOR FT HELIX KIT | 1 |
| 4 | 4178578 | COUPLING D.12XD.19 FT100 KIT | 1 |
| 5 | 4159707 | SCREW M8X30 (4 PIECES) | 1 |
| 6 | 2018365 | STUD BOLT M12X392 KIT | 1 |
| 7 | 4210143 | STATIONARY RING HOLDER HELIX 6" EPDM | 1 |
| 7.2 | 2127607 | > STATIONARY RING HOLDER 6" HELIX 1.4301 V | 1 |
| 7.3 | 4176513 | > O-RING FOR PUMP JACKET VP. | 1 |
| 7.4 | 2127603 | > O-RING ID.37,6x2,4 EPDM VP. | 1 |
| 7.5 | 2127602 | > O-RING ID.21,35x2 EPDM VP. | 1 |
| 8 | 4159686 | FILING/PURGING PLUG HELIX EPDM KIT | 1 |
| 9 | 4178564 | SEAL-KIT-HELIX2-4 O/E KIT | 1 |
| 10 | 2127576 | HOUSING PIPE D.152x260 1.4301 KIT | 1 |
| 11 | 4179315 | CENTERING STAGE HELIX V2 1.4307 VP. | 1 |
| 12 | 4178568 | SHAFT EQUIPMENT HELIX V2/V4 KIT | 1 |
| 12.1 | | > NUT-H-M8-STAINLESS-STEEL A4-70 | 2 |
| 12.2 | | > SHAFT END WASHER Ø8/Ø12 316L | 1 |
| 12.3 | | > STOP COLLAR OF IMPELLER M+2/4 SINGLEBLOC | 1 |
| 12.4 | | > STOP-RUSH-1/2-D12xd2-M+316 | 2 |
| 13 | | HYDRAULIC HELIX V 208 1.4307 | 1 |
| 14 | 4178592 | SHAFT D.12X383 1.4301 VP. | 1 |
| 15 | 4174079 | PUMP HOUSING HELIX DN32 PN16 1.4301 KIT | 1 |
| 7.3 | 4176513 | > O-RING FOR PUMP JACKET VP. | 1 |
| 15.1 | | > BLASTING PPE HOUSING V-PN16-DN32-5"-304 | 1 |
| 15.2 | 4217889 | > COUNTER FLANGE-G1"-PN16-GJL KIT | 1 |
| 15.3 | 4171321 | > PRIMING/DRAIN PLUG EPDM HELIX KIT | 1 |
| 16 | 4177964 | BASEPLATE HELIX V2/4/6 PN16 VP. | 1 |

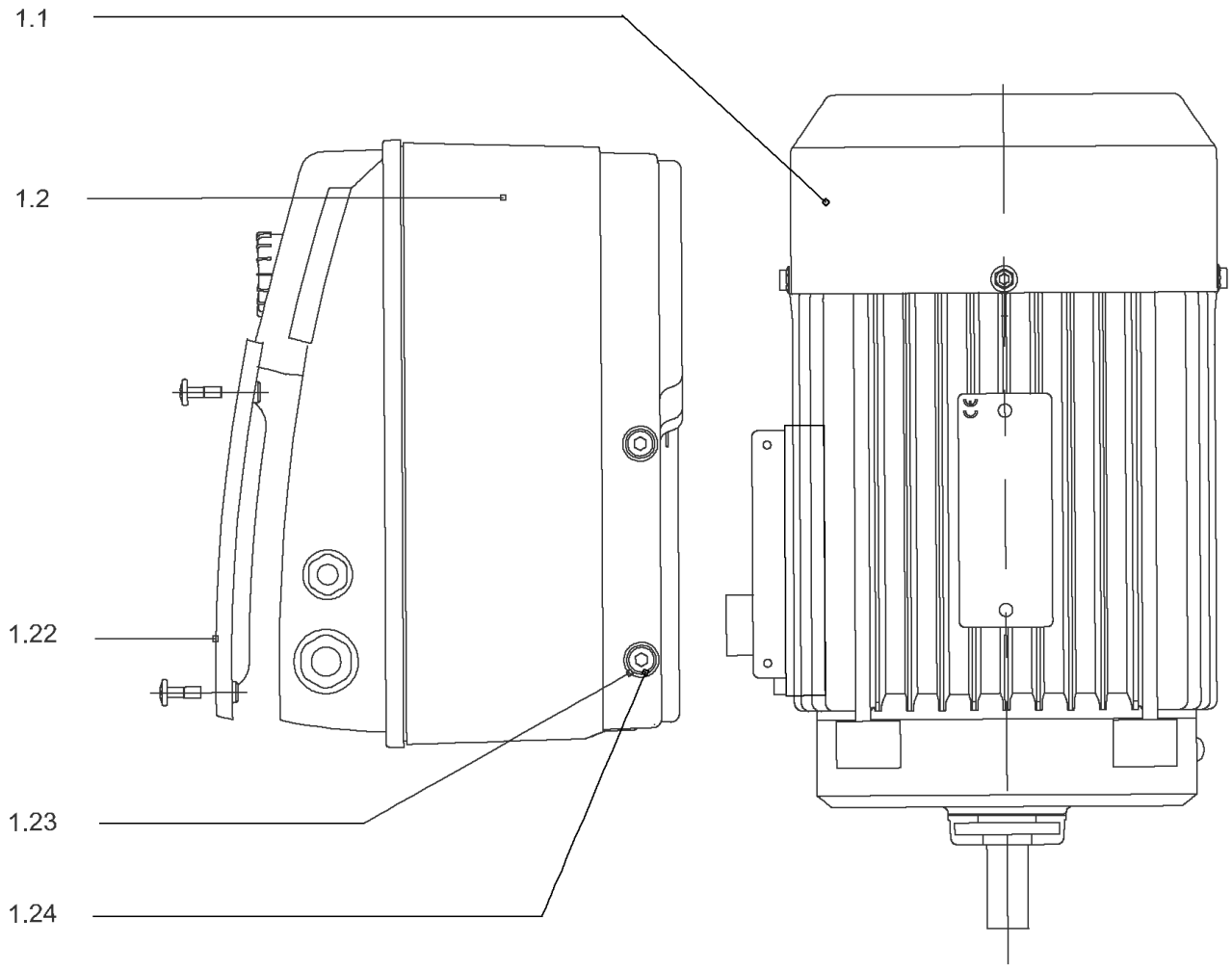
1.1
1.2
1.22
1.23
1.24

## DRIVE HELIX-VE208-IE2-WE KIT

| Item | Article no. | Description | Quantity |
|---|---|---|---|
| 1.1 | 4184817 | MOTOR 1,1/2/80 3~ 380V 60HZ IE2 WE VP. | 1 |
| | | SPARE PARTS MOTOR:ON REQUEST | 1 |
| 1.2 | 4186222 | MODULEHELIX-VE208-IE2-WE KIT | 1 |
| 1.22 | 2054372 | > MODULE COVER TL1,TL2+GASKET KIT | 1 |
| 1.23 | 4215716 | > SCREW M5X16 DIN912 8.8 A2A (4pieces) VP. | 1 |
| 1.24 | 2057978 | > RONDELLE A5,3 DIN6797 FST ZN (4 PIECES) | 1 |

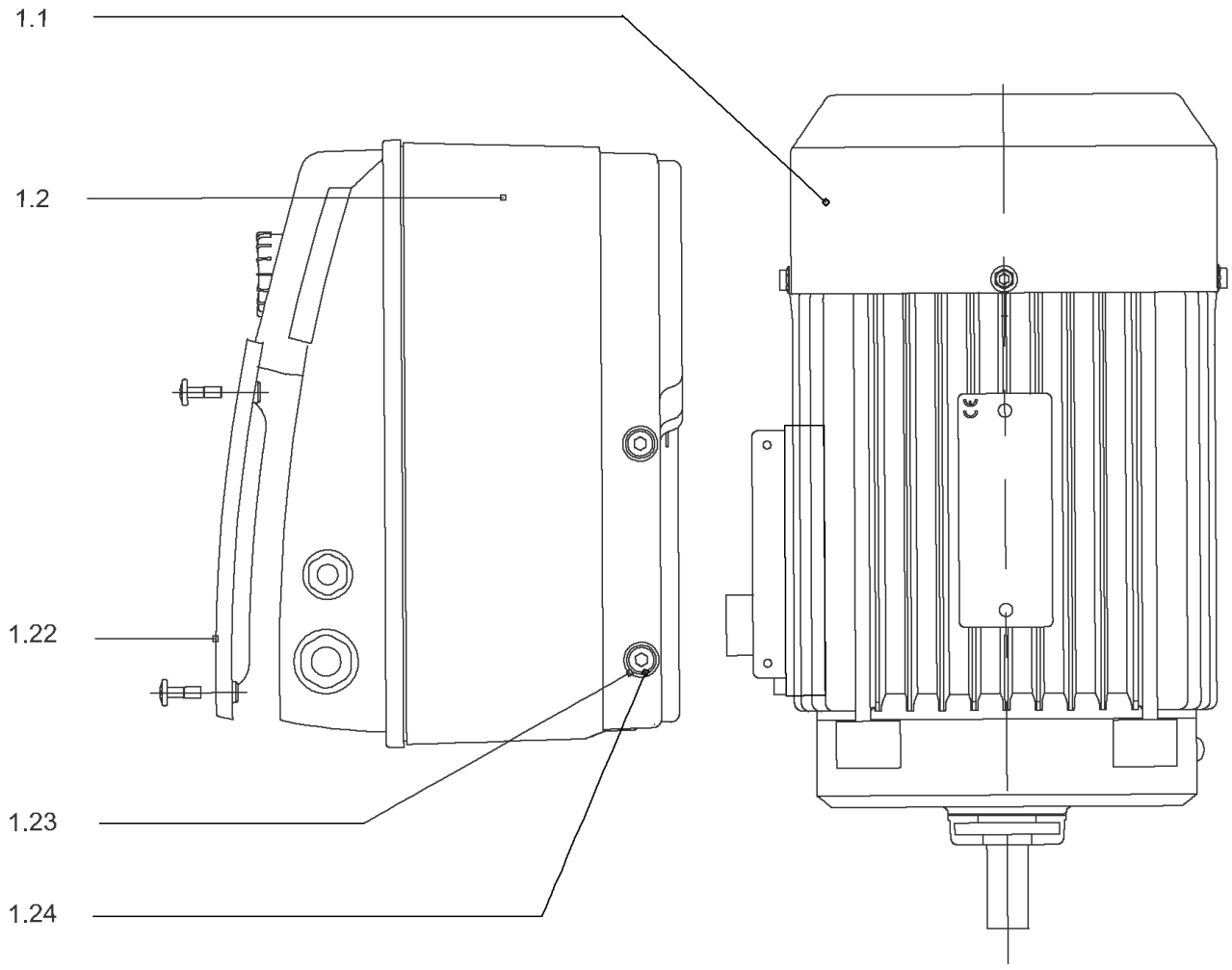
1.1
1.2
1.22
1.23
1.24

## DRIVE HELIX-VE208-IE4-WE KIT

| Item | Article no. | Description | Quantity |
|---|---|---|---|
| 1.1 | 4207916 | MOTOR 1.1/2/80 3~ 380V 60HZ IE4 WE VP. | 1 |
| | | SPARE PARTS MOTOR:ON REQUEST | 1 |
| 1.2 | 4209597 | MODULE HELIX-VE208-IE4-WE KIT | 1 |
| 1.22 | 2054372 | > MODULE COVER TL1,TL2+GASKET KIT | 1 |
| 1.23 | 4215716 | > SCREW M5X16 DIN912 8.8 A2A (4pieces) VP. | 1 |
| 1.24 | 2057978 | > RONDELLE A5,3 DIN6797 FST ZN (4 PIECES) | 1 |

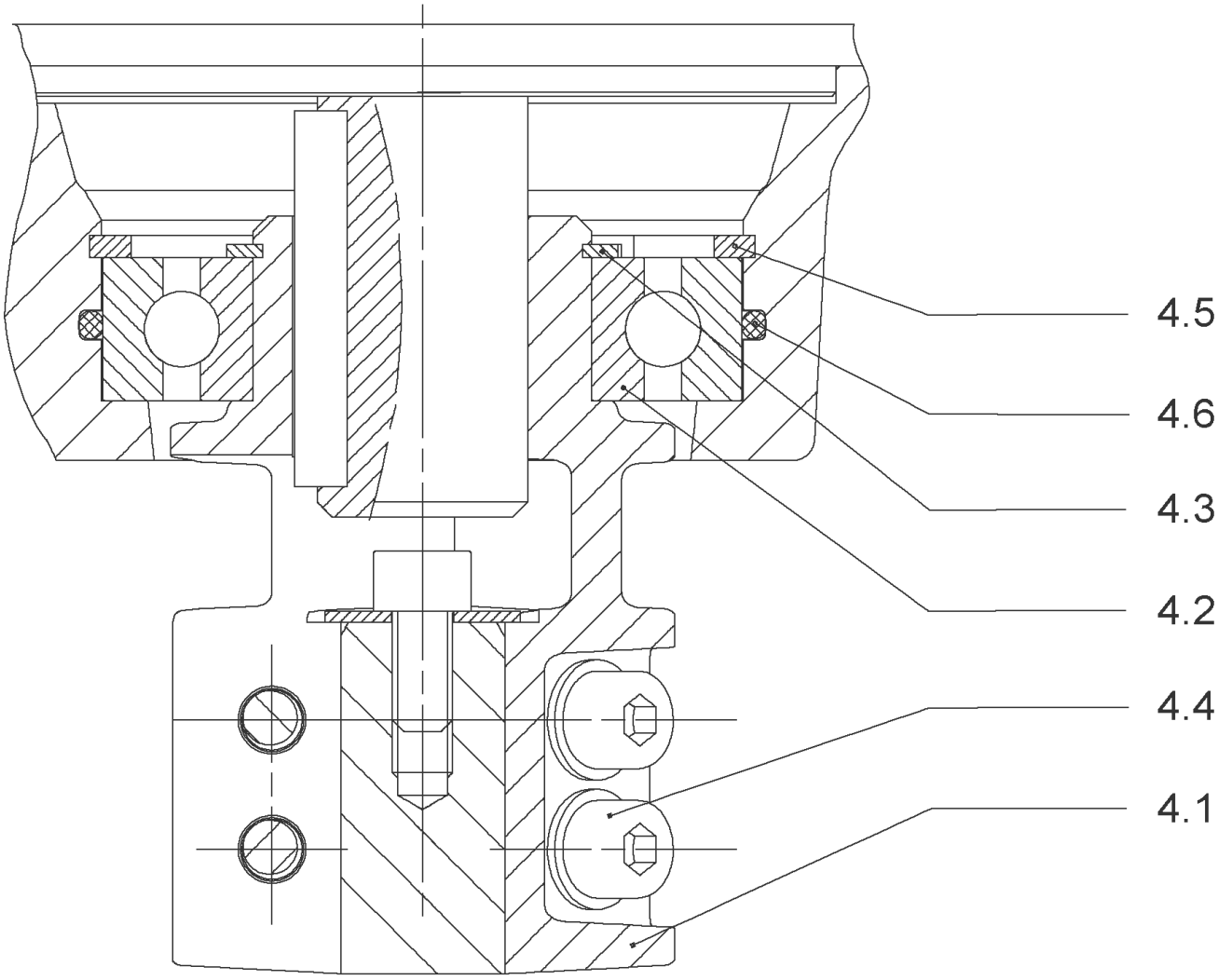
4.5
4.6
4.3
4.2
4.4
4.1

## COUPLING D.12XD.19 FT100 KIT (4178578)

| Item | Article no. | Description | Quantity |
|---|---|---|---|
| 4.1 | | COUPLING-M+ Ø12XØ19-FT100-MACHINED | 1 |
| 4.3 | 4234249 | CIRCLIP-FOR-SHAFT-D30x1.5 VP. | 1 |
| 4.2 | 2130977 | BALL BEARING 6206/ZZ-C3(HT)VP. | 1 |
| 4.4 | 4212716 | SCREW M6X20 KIT (4PIECES) | 1 |
| 4.5 | 4234250 | CIRCLIP-D62x2 VP. | 1 |
| 4.6 | 4234245 | O-RING 63X3 VP. | 1 |
| | | CONTACT-WASHER-6ETR-6,1x12,2x1,8-STEEL | 4 |

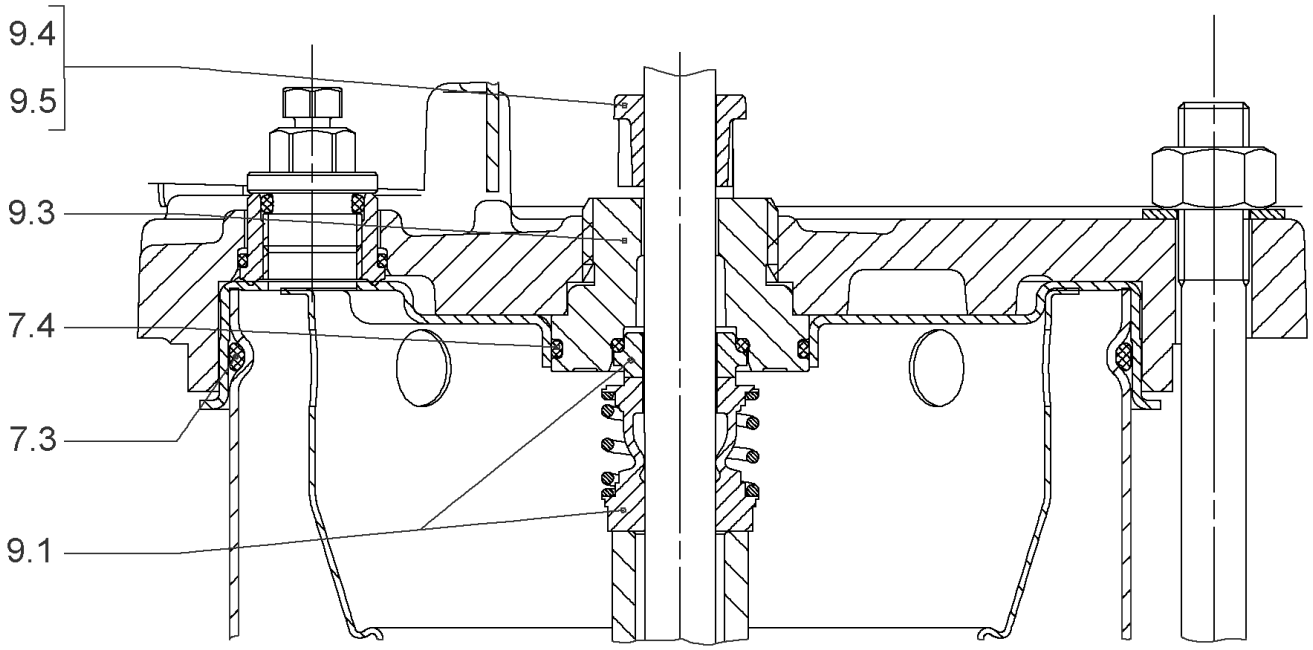
9.4
9.5
9.3
7.4
7.3
9.1

## SEAL-KIT-HELIX2-4 O/E KIT (4178564)

| Item | Article no. | Description | Quantity |
|---|---|---|---|
| 7.3 | 4176513 | O-RING FOR PUMP JACKET VP. | 1 |
| 7.4 | 2127603 | O-RING ID.37,6x2,4 EPDM VP. | 1 |
| 9.1 | 4178563 | M.SEAL.HELIX2-4 O/E VP. | 1 |
| 9.3 | 4178561 | RING HOLDER Ø22 1.4301 VP. | 1 |
| 9.5 | 4178562 | DRIVE RING D.22/12.2X10 MACH.VP. | 1 |
| 9.4 | 4176520 | SCREW CH M5x5 A4-70 ( 3PIECES ) | 1 |

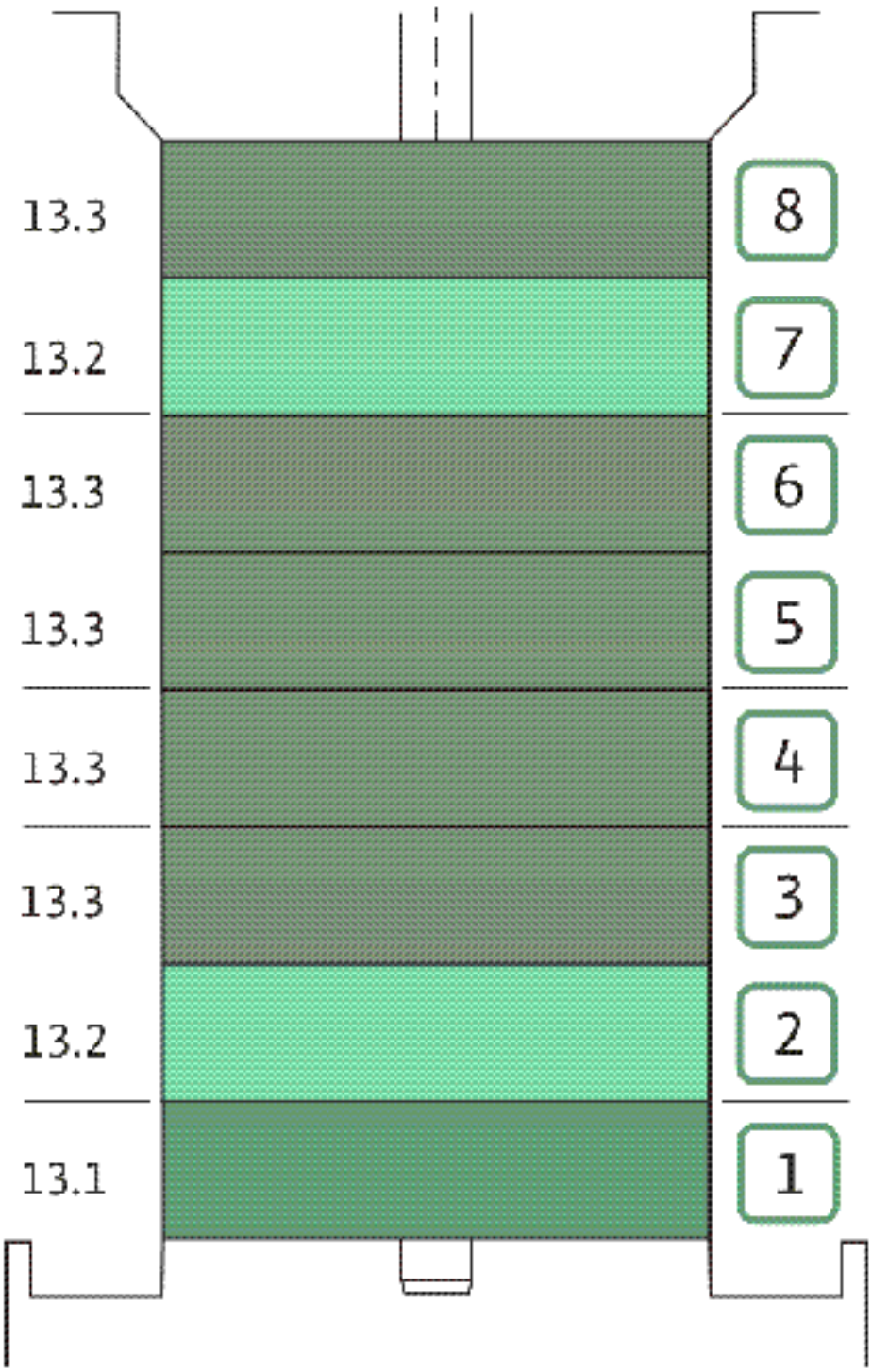
13.3
13.2
13.3
13.3
13.3
13.3
13.2
13.1
8
7
6
5
4
3
2
1

| Item | Article no. | Description | Quantity |
|---|---|---|---|
| 13.1 | 4179316 | STAGE HELIX 2 1.4301 KIT | 1 |
| | | > MACH.STG-CASING-WOGV-WNR-M+2-4-304 | 1 |
| | | > IMPELLER-M+2-304 | 1 |
| 13.2 | 4179317 | STAGE BEARING HELIX 2 1.4307 KIT | 1 |
| | | > MACH.BEARING-STG-CASING-WNR-M+2-304 | 1 |
| | | > IMPELLER-M+2-304 | 1 |
| | | > SHAFT SLEEVE SPACER Ø15,35x10,305-304 | 1 |
| | | > SHAFT-SLEEVE-D12xD16x14-CW | 1 |
| 13.3 | 4179319 | INTERMEDIATE STAGE HELIX 2 1.4301 KIT | 1 |
| | | > CORPS-ETG-STD-ACR-AJR-USIN.M+2-304 | 1 |
| | | > IMPELLER-M+2-304 | 1 |
| | | > IMPELLER SPACER Ø12,05X14,85-L24,285-304 | 1 |

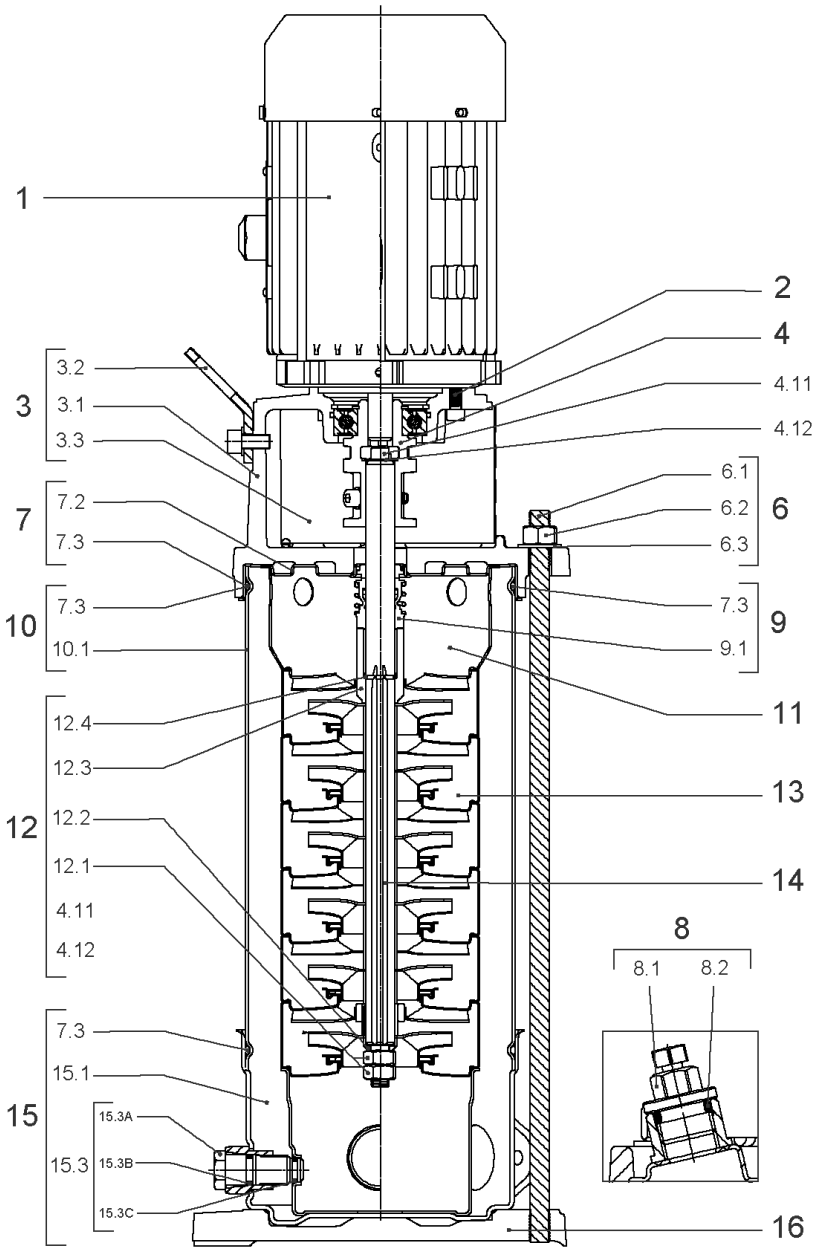
1
2
4
4.11
4.12
3
3.2
3.1
3.3
7
7.2
7.3
10
7.3
10.1
6
6.1
6.2
6.3
9
7.3
9.1
11
12
12.4
12.3
12.2
12.1
4.11
4.12
13
14
8
8.1
8.2
15
7.3
15.1
15.3
15.3A
15.3B
15.3C
16

## HELIX VE208-1/16/E/S (4201565)

| Item | Article no. | Description | Quantity |
|---|---|---|---|
| 1 | | DRIVE HELIX-VE208-IE4-WE KIT | 1 |
| Note: MOTOR BRAND WILO ELEC | | | |
| | | SPARE PARTS MOTOR:ON REQUEST | 1 |
| 2 | 4212716 | SCREW M6X20 KIT (4PIECES) | 1 |
| 3 | 4213752 | LANTERN FT100 HELIX KIT | 1 |
| 3.1 | | > LANT-MOT-VMI-ReDTC6"-FT100-MACHINED+CATA | 1 |
| 3.2 | 4184852 | > EYELET CPL.FT HELIX (2 PIECES) | 1 |
| 3.3 | 4213713 | > COUPLING PROTECTOR FT85/100 HELIX KIT | 1 |
| 4 | 4178578 | COUPLING D.12XD.19 FT100 KIT | 1 |
| 6 | 2018365 | STUD BOLT M12X392 KIT | 1 |
| 7 | 4212722 | STATIONARY RING HOLDER HELIX D23 ReDTC | 1 |
| 7.2 | 4212720 | > STATIONARY RING HOLDER HELIX D23 VP. | 1 |
| 7.3 | 4176513 | > O-RING FOR PUMP JACKET VP. | 1 |
| 8 | 4212724 | FILING/PURGING PLUG HELIX ReDTC KIT | 1 |
| 8.1 | | > FILLING PLUG MVI6"-304 | 1 |
| 8.2 | 4177800 | > O-RING EPDM PLUG HELIX VP. | 1 |
| 9 | 4212726 | MECH.SEAL HELIX V2/4 O/E ReDTC KIT | 1 |
| 9.1 | 4178563 | > M.SEAL.HELIX2-4 O/E VP. | 1 |
| 7.3 | 4176513 | > O-RING FOR PUMP JACKET VP. | 1 |
| 10 | 2127576 | HOUSING PIPE D.152x260 1.4301 KIT | 1 |
| 11 | 4179315 | CENTERING STAGE HELIX V2 1.4307 VP. | 1 |
| 12 | 4212729 | SHAFT EQUIPMENT HELIX V2/4 ReDTC KIT | 1 |
| 12.1 | | > NUT-H-M8-STAINLESS-STEEL A4-70 | 1 |
| 12.2 | | > SHAFT END WASHER Ø8/Ø12 316L | 1 |
| 12.3 | | > 1/2-SNAP-RING-2/4M3-316L | 1 |
| 12.4 | | > STOP-RUSH-1/2-D12xd2-M+316 | 1 |
| 4.11 | | > SCREW CHC-M6X14-8.8-ISO4762-GEOMET500A | 1 |
| 4.12 | | > WASHER D.24 L6U ZINK | 1 |
| 13 | | HYDRAULIC HELIX V 208 1.4307 | 1 |
| 14 | 4213754 | SHAFT D.12X331 HELIX 1.4057 VP. | 1 |
| 15 | 4174079 | PUMP HOUSING HELIX DN32 PN16 1.4301 KIT | 1 |
| 7.3 | 4176513 | > O-RING FOR PUMP JACKET VP. | 1 |
| 15.1 | | > BLASTING PPE HOUSING V-PN16-DN32-5"-304 | 1 |
| 15.2 | 4217889 | > COUNTER FLANGE-G1"-PN16-GJL KIT | 1 |

| Item | Article no. | Description | Quantity |
|---|---|---|---|
| 15.3 | 4171321 | > PRIMING/DRAIN PLUG EPDM HELIX KIT | 1 |
| 16 | 4177964 | BASEPLATE HELIX V2/4/6 PN16 VP. | 1 |

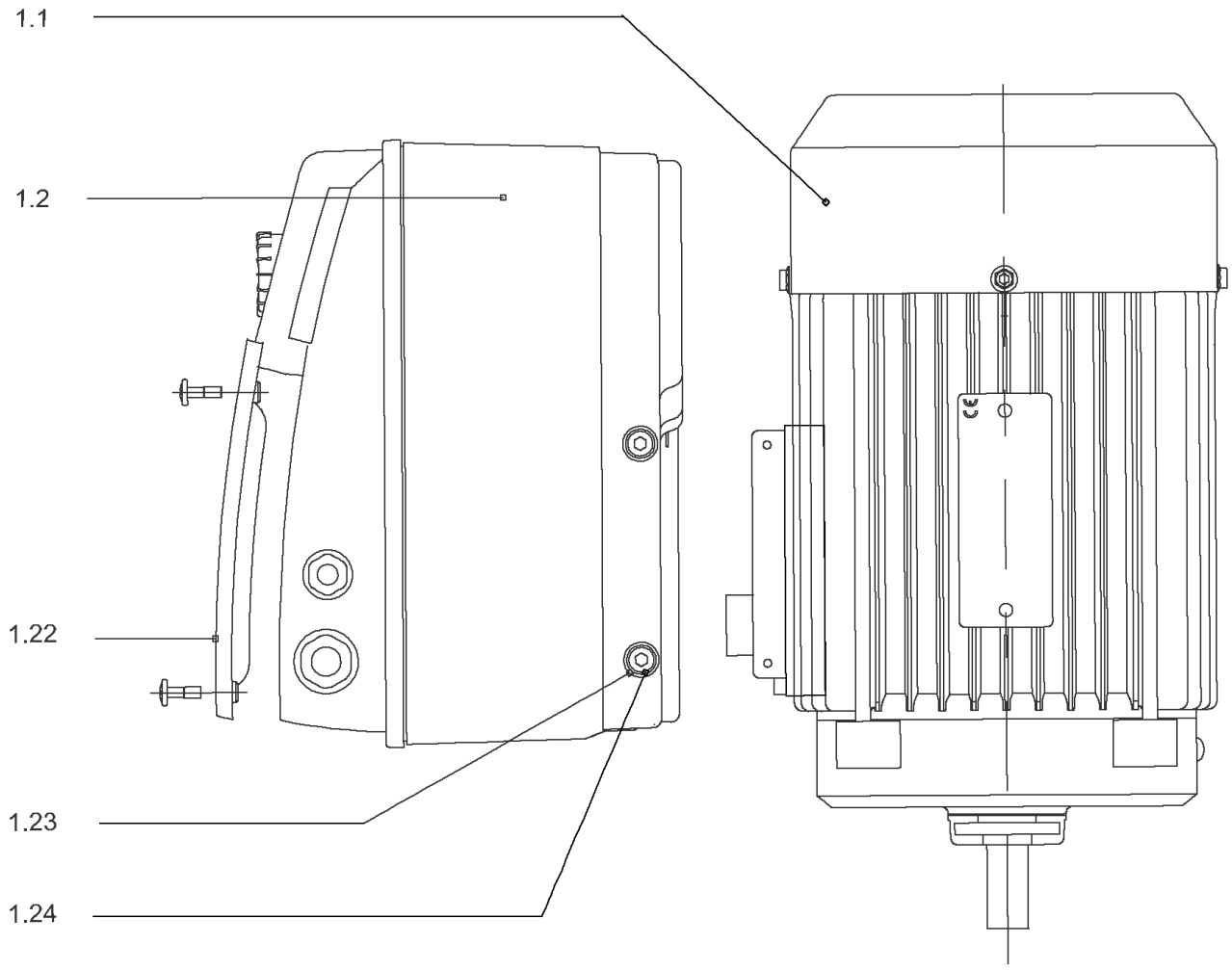
1.1
1.2
1.22
1.23
1.24

## DRIVE HELIX-VE208-IE4-WE KIT

| Item | Article no. | Description | Quantity |
|---|---|---|---|
| 1.1 | 4207916 | MOTOR 1.1/2/80 3~ 380V 60HZ IE4 WE VP. | 1 |
| | | SPARE PARTS MOTOR:ON REQUEST | 1 |
| 1.2 | 4209597 | MODULE HELIX-VE208-IE4-WE KIT | 1 |
| 1.22 | 2054372 | > MODULE COVER TL1,TL2+GASKET KIT | 1 |
| 1.23 | 4215716 | > SCREW M5X16 DIN912 8.8 A2A (4pieces) VP. | 1 |
| 1.24 | 2057978 | > RONDELLE A5,3 DIN6797 FST ZN (4 PIECES) | 1 |

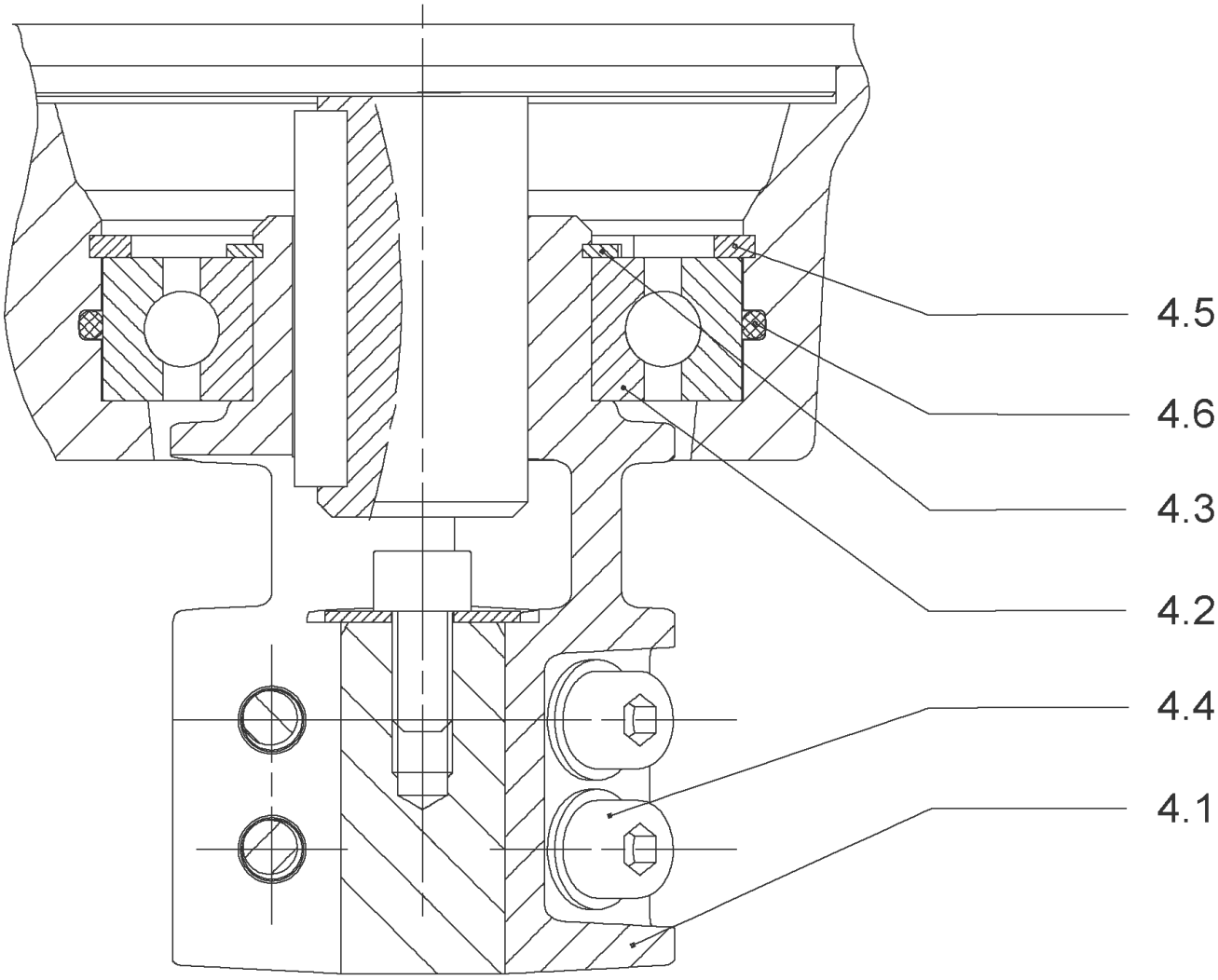
4.5
4.6
4.3
4.2
4.4
4.1

## COUPLING D.12XD.19 FT100 KIT (4178578)

| Item | Article no. | Description | Quantity |
|---|---|---|---|
| 4.1 | | COUPLING-M+ Ø12XØ19-FT100-MACHINED | 1 |
| 4.3 | 4234249 | CIRCLIP-FOR-SHAFT-D30x1.5 VP. | 1 |
| 4.2 | 2130977 | BALL BEARING 6206/ZZ-C3(HT)VP. | 1 |
| 4.4 | 4212716 | SCREW M6X20 KIT (4PIECES) | 1 |
| 4.5 | 4234250 | CIRCLIP-D62x2 VP. | 1 |
| 4.6 | 4234245 | O-RING 63X3 VP. | 1 |
| | | CONTACT-WASHER-6ETR-6,1x12,2x1,8-STEEL | 4 |

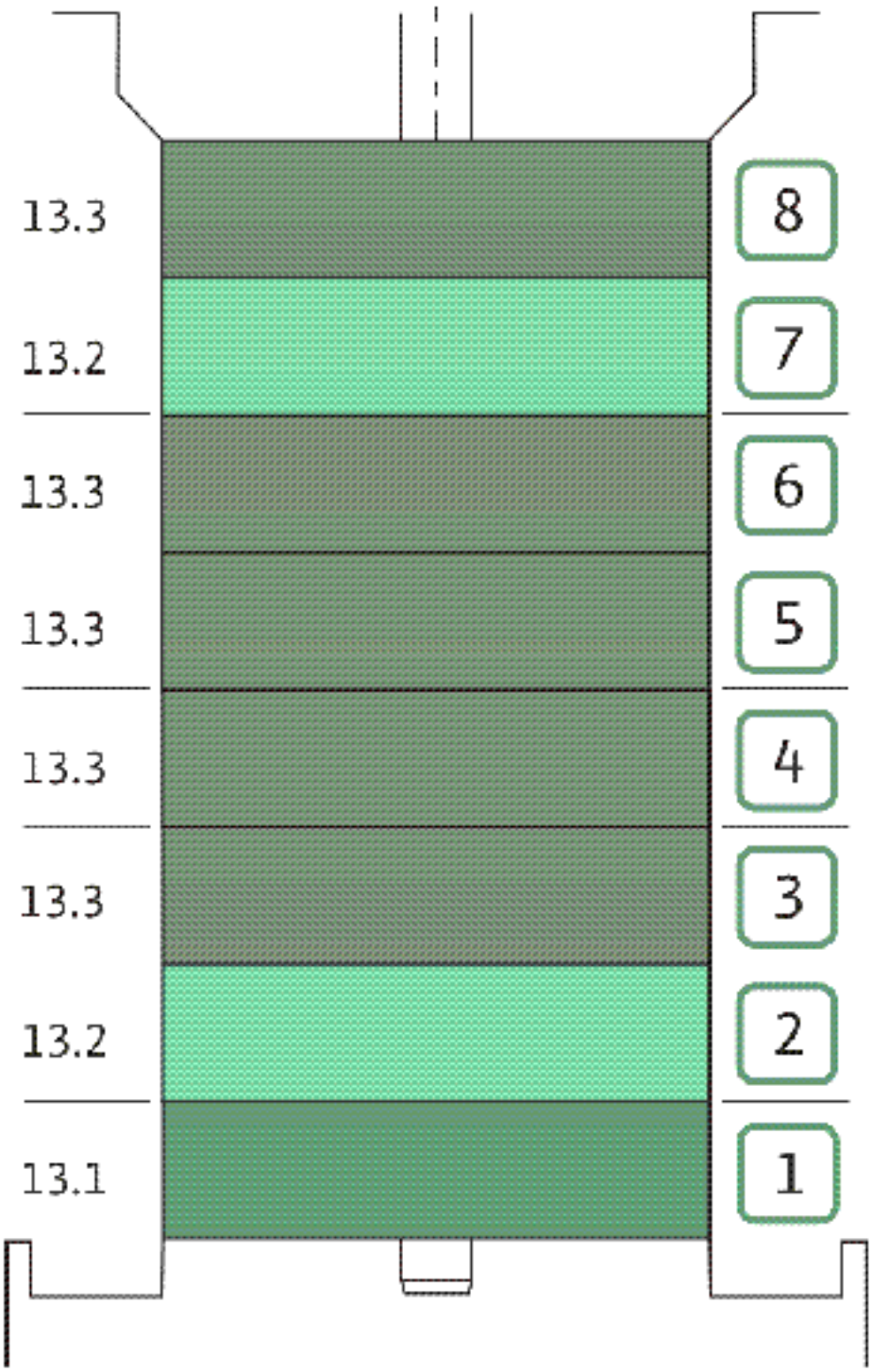
13.3
13.2
13.3
13.3
13.3
13.3
13.2
13.1
8
7
6
5
4
3
2
1

| Item | Article no. | Description | Quantity |
|---|---|---|---|
| 13.1 | 4179316 | STAGE HELIX 2 1.4301 KIT | 1 |
| | | > MACH.STG-CASING-WOGV-WNR-M+2-4-304 | 1 |
| | | > IMPELLER-M+2-304 | 1 |
| 13.2 | 4179317 | STAGE BEARING HELIX 2 1.4307 KIT | 1 |
| | | > MACH.BEARING-STG-CASING-WNR-M+2-304 | 1 |
| | | > IMPELLER-M+2-304 | 1 |
| | | > SHAFT SLEEVE SPACER Ø15,35x10,305-304 | 1 |
| | | > SHAFT-SLEEVE-D12xD16x14-CW | 1 |
| 13.3 | 4179319 | INTERMEDIATE STAGE HELIX 2 1.4301 KIT | 1 |
| | | > CORPS-ETG-STD-ACR-AJR-USIN.M+2-304 | 1 |
| | | > IMPELLER-M+2-304 | 1 |
| | | > IMPELLER SPACER Ø12,05X14,85-L24,285-304 | 1 |

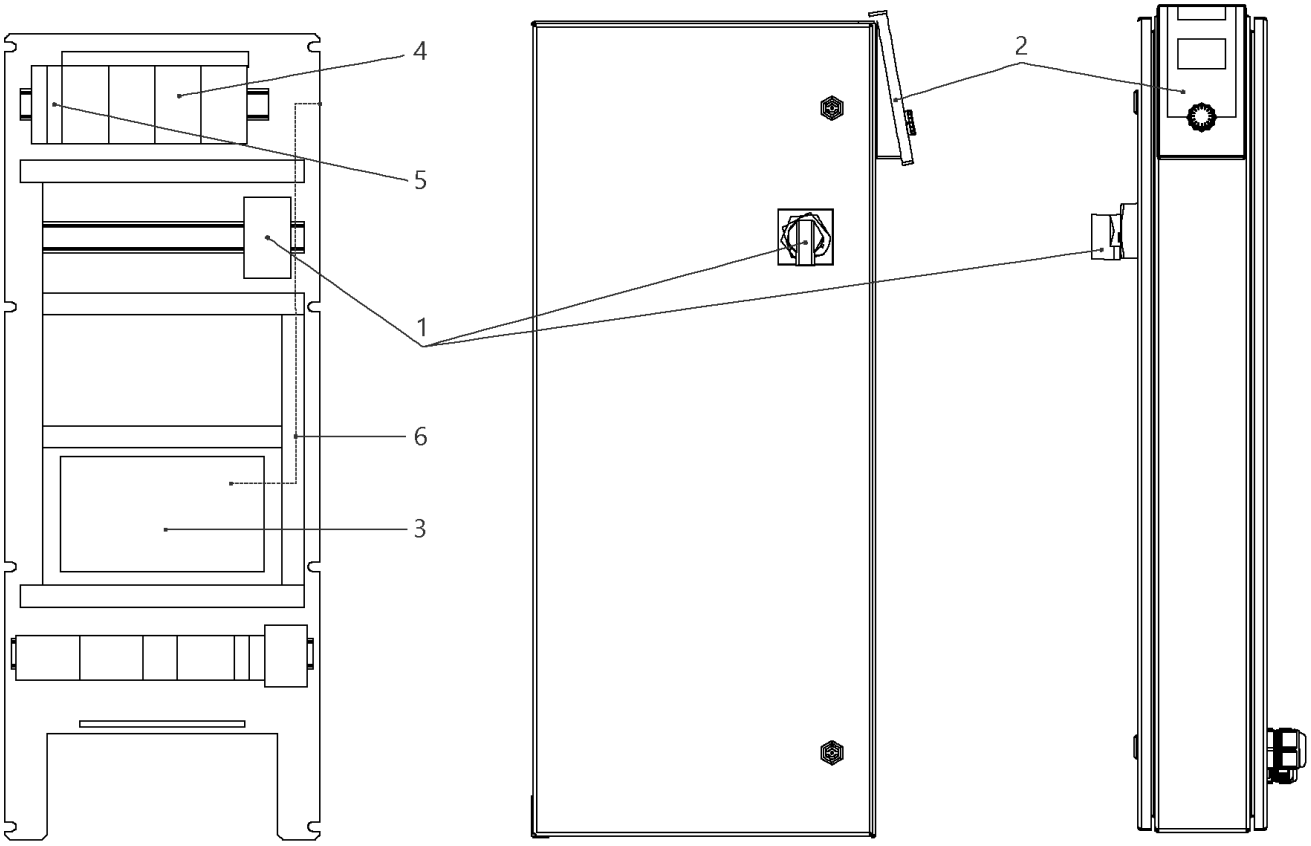
4
5
1
6
3
2

## W-CTRL-SCE-B-3x0,55-1,5KW-T4-FM-ND1

| Item | Article no. | Description | Quantity |
|---|---|---|---|
| 1 | 2104470 | MAIN SWITCH OT40F3 L250 KIT | 1 |
| 2 | 4184784 | CONTROL PANEL HMI SC KIT | 1 |
| 2 | 4185259 | ASSEMBLY DISPLAY SC PKG VP. | 1 |
| 3 | 4185257 | ASSEMBLY CPU SCe Booster VP. | 1 |
| 4 | 2051217 | AUTOM.CIRCUIT BREAKER S203 B16 TO7,5kW | 1 |
| 5 | 2046288 | CIRCUIT BREAKER S201 B16 | 1 |
| 6 | 4197081 | CABLE RJ45 CAT6 0,5M RED SC-PANEL VP. | 1 |

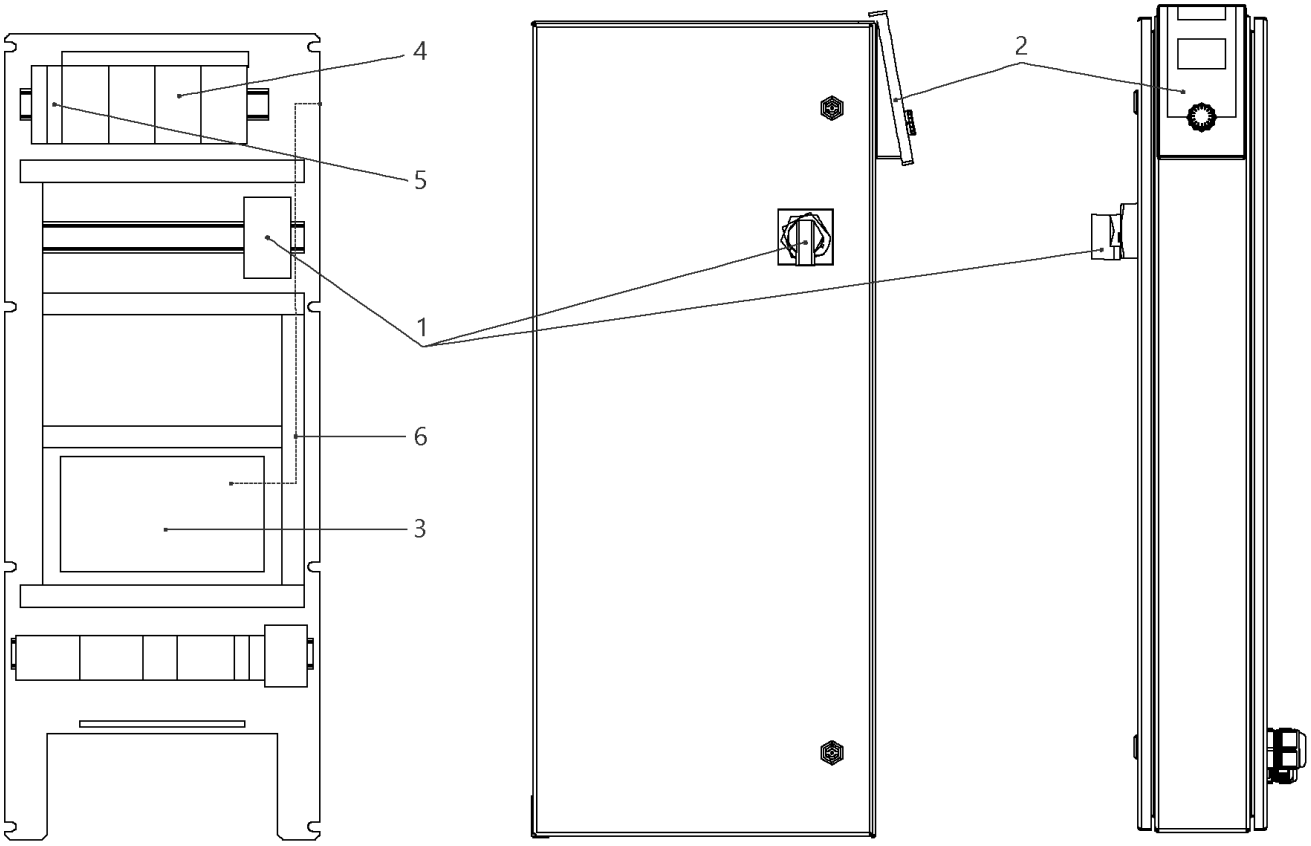
4
5
1
6
3
2

## W-CTRL-SCE-B-3x10A-T34-FM-ND1-AVC-PKG (2541914)

| Item | Article no. | Description | Quantity |
|---|---|---|---|
| 1 | 2104473 | MAIN SWITCH OT63F3 L105 KIT | 1 |
| Note: TO / BIS / JUSQU'AU 30/06/2015 | | | |
| 1 | 2104470 | MAIN SWITCH OT40F3 L250 KIT | 1 |
| Note: FROM / AB / À PARTIR DU 01/07/2015 | | | |
| 2 | 4184784 | CONTROL PANEL HMI SC KIT | 1 |
| 2 | 4185259 | ASSEMBLY DISPLAY SC PKG VP. | 1 |
| Note: DISPLAY ALONE / PLATINE SEULE | | | |
| 3 | 4185257 | ASSEMBLY CPU SCe Booster VP. | 1 |
| 4 | 2119861 | AUTOMATIC CIRCUIT BREAKER S203 B13 3POL. | 1 |
| 5 | 2046288 | CIRCUIT BREAKER S201 B16 | 1 |
| 6 | 4197081 | CABLE RJ45 CAT6 0,5M RED SC-PANEL VP. | 1 |

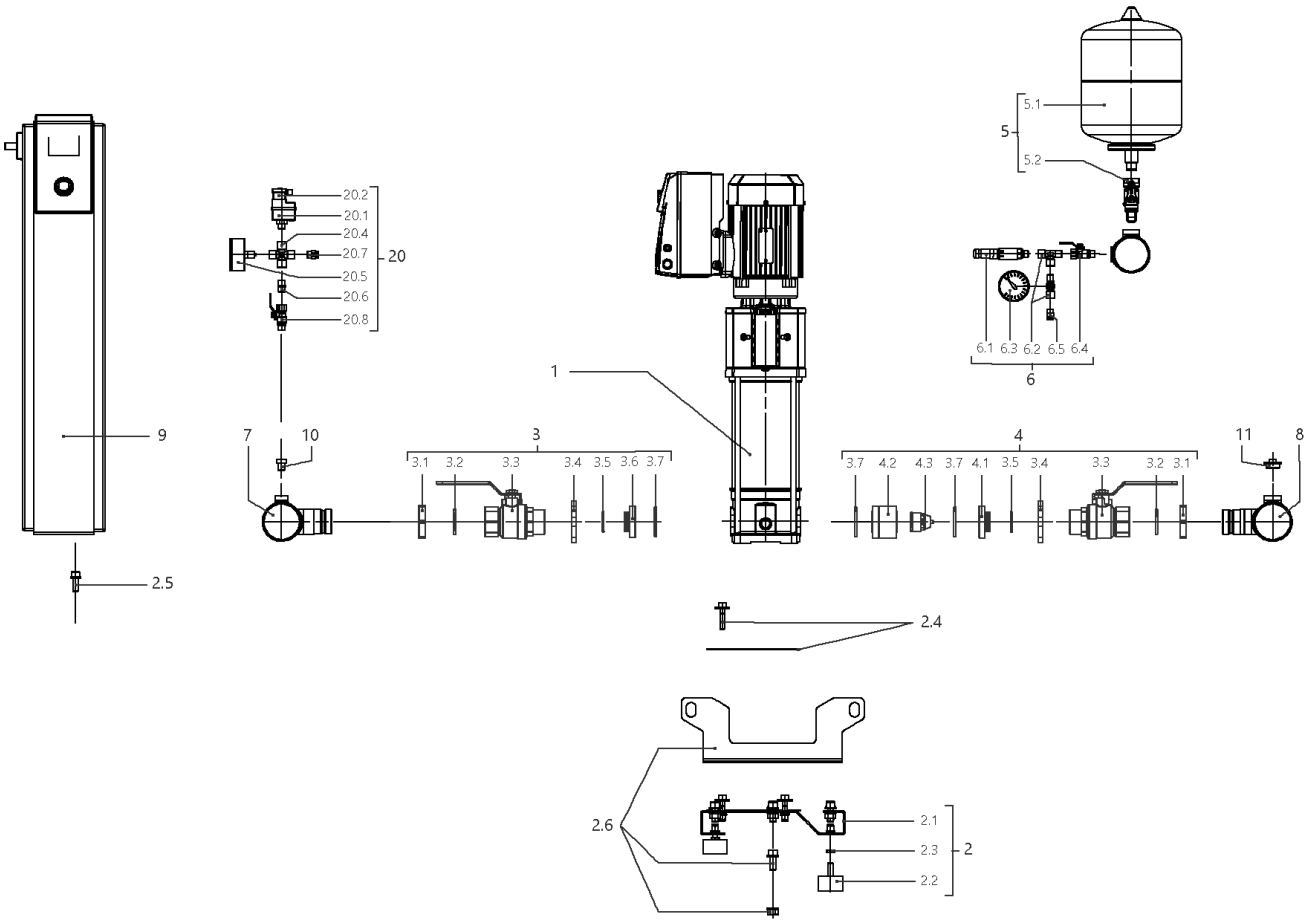
5.1
5
5.2
20.2
20.1
20.4
20.7
20
20.5
20.6
20.8
6.1 6.3 6.2 6.5 6.4
6
1
9
7
10
3
3.1 3.2 3.3 3.4 3.5 3.6 3.7
4
3.7 4.2 4.3 3.7 4.1 3.5 3.4 3.3 3.2 3.1
11
8
2.5
2.4
2.6
2.1
2.3
2
2.2

## SiBoost Smart 3HELIX VE211 (2541591)

| Item | Article no. | Description | Quantity |
|---|---|---|---|
| 1 | | HELIX VE211-1/16/E/S | 1 |
| Note: TO / BIS / JUSQU'AU 29/02/2016 | | | |
| 1 | 4201566 | HELIX VE211-1/16/E/S | 1 |
| Note: FROM / AB / À PARTIR DU 01/03/2016 | | | |
| 2 | 4200137 | BASE PLATE DE3 1150x300 M10 KIT | 1 |
| 2.1 | | > BASEPLATE_3x4/6/10V_E300_1150x300BOX_150 | 1 |
| 2.2 | 2028654 | > VIBRATION DAMPER D.50X30 M10X28 | 1 |
| 2.3 | 2028281 | > NUT M10 DIN936 (ISO4035) 17H VZ | 1 |
| 2.4 | 4199875 | > HOLDER PUMP Siboost Helix V2/4 KIT | 1 |
| 2.5 | 4197084 | > HOLDER SWITCHBOX WILO Smart Control KIT | 1 |
| 2.6 | 4197085 | > LIFTING Siboost HELIX SC KIT | 1 |
| 3 | 4199876 | SUCTION SIDE Siboost Helix V2/4/6 KIT | 1 |
| 3.1 | 2032610 | > NUT G11/4 MS VP. | 1 |
| 3.2 | 2032611 | > O-RING ID.36,09X3,53N DIN3771 E7502 | 1 |
| 3.3 | 2507646 | > BALL VALVE G11/4"M-F-W.HANDLE 1/4-TURN | 1 |
| 3.4 | 2032613 | > SCREWED FLANGE G1 1/4" LK-75 ST37VZ | 1 |
| 3.5 | 2032614 | > O-RING ID.29,82X2,62N DIN3771 E7502 | 1 |
| 3.6 | 2032615 | > SPACER F.I/A KUH.DN32 CUZN | 1 |
| 3.7 | 2032616 | > O-RING ID.44X3,53N DIN3771 E7502 | 1 |
| 4 | 4199877 | DELIVERY SIDE Siboost Helix V2/4/6 KIT | 1 |
| 3.1 | 2032610 | > NUT G11/4 MS VP. | 1 |
| 3.2 | 2032611 | > O-RING ID.36,09X3,53N DIN3771 E7502 | 1 |
| 3.3 | 2507646 | > BALL VALVE G11/4"M-F-W.HANDLE 1/4-TURN | 1 |
| 3.4 | 2032613 | > SCREWED FLANGE G1 1/4" LK-75 ST37VZ | 1 |
| 3.5 | 2032614 | > O-RING ID.29,82X2,62N DIN3771 E7502 | 1 |
| 4.1 | 2058116 | > SPACER F.I/A KUH.DN32 CUZN | 1 |
| 3.7 | 2032616 | > O-RING ID.44X3,53N DIN3771 E7502 | 1 |
| 4.2 | 2058115 | > HOUSING RFV(RV-IN) DN32 SGS/DRS | 1 |
| 4.3 | 2027870 | > NON-RETURN-DEVICE INSERT DN32(MTR) | 1 |
| 5 | 2032642 | DIAPHREM TANK 8L/PN16 DIN4807/T5 KIT | 1 |
| 5.1 | 2045914 | > DIAPHREM TANK 8L TYP-DD 16BAR | 1 |
| 5.2 | 2027853 | > FLOW FITTING G3/4 FOR DIAPHRAGM VES. | 1 |
| 6 | 4197076 | PRESSURE SENSOR/ GAUGE 0-16BAR KIT | 1 |
| 6.1 | 2085909 | > PRESS.SENSOR 1/4" 0-16BAR 4-20MA VP. | 1 |

| Item | Article no. | Description | Quantity |
|---|---|---|---|
| 6.2 | 4197077 | > T-PIECE 1/4" VP. | 1 |
| 6.3 | 2028692 | > PRESSURE GAUGE NG63-PN16-G1/4 | 1 |
| 6.4 | 2028291 | > BALL TAP R1/4" PN42 GIACOMINI R254DL | 1 |
| 6.5 | 2028691 | > BLOWGUN 1/4" MS 30BAR VP. | 1 |
| 7 | 4200147 | PIPE DE4 11/2''-3x11/4"+2x1/4x900 VP. | 1 |
| 8 | 4200148 | PIPE DE4 11/2''-3x11/4"+2x1/4+1x3/4x900 | 1 |
| 9 | | W-CTRL-SCE-B-3x0,55-1,5KW-T4-FM-ND1 | 1 |
| Note: TO / BIS / JUSQU'AU 18/05/2014 | | | |
| 9 | 2541914 | W-CTRL-SCE-B-3x10A-T34-FM-ND1-AVC-PKG | 1 |
| Note: FROM / AB / À PARTIR DU 19/05/2014 | | | |
| 10 | 4197079 | PLUG G1/4"x10 AISI304 KIT | 1 |
| 11 | 2032654 | PLUG R3/4" MS VIEGA 1751 | 1 |
| 20 | | ASSEMBLY WMS. DE-EB. +VP | 1 |
| 20.1 | 2028652 | > PRESSURE SWITCH PS3-ASR 1/(1,3) VP. | 1 |
| 20.2 | 2130983 | > PLUG PS3-415 WITH KABEL 1,5M 2NO VP. | 1 |
| 20.4 | 2028290 | > CROSSPIECE R1/4" MS-NICKEL | 1 |
| 20.5 | 2028687 | > PRESSURE GAUGE NG63 R1/4" HI.0-6BAR | 1 |
| 20.6 | 2054268 | > DUAL NIPPLE G1/4" x G1/4" MS VP. | 1 |
| 20.7 | 2028691 | > BLOWGUN 1/4" MS 30BAR VP. | 1 |
| 20.8 | 2028291 | > BALL TAP R1/4" PN42 GIACOMINI R254DL | 1 |

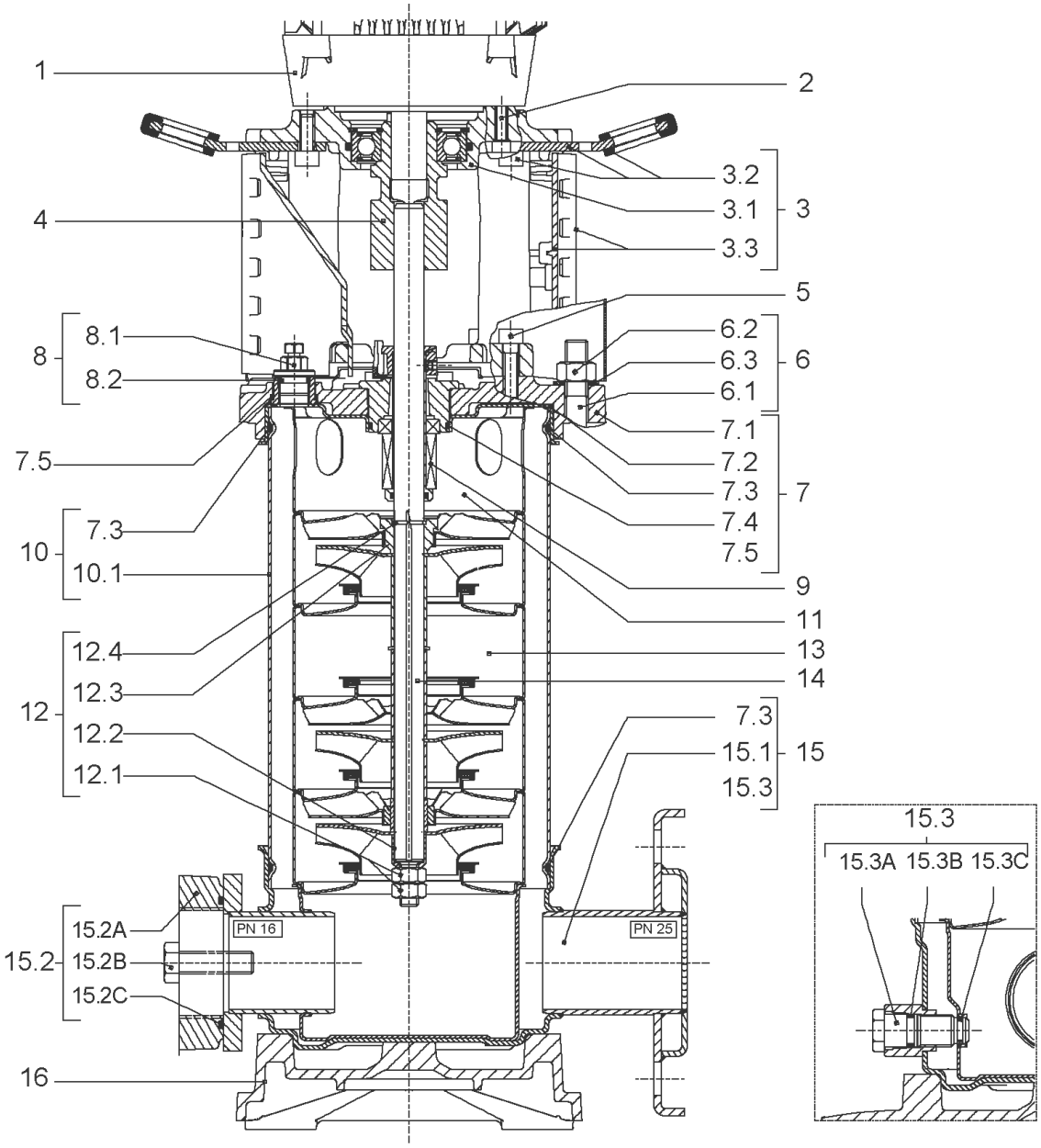
1
2
3.2
3.1
3
3.3
4
5
8.1
8
8.2
6.2
6.3
6
6.1
7.1
7.5
7.2
7.3
7
7.4
7.3
10
7.5
10.1
9
11
12.4
13
12.3
14
12
12.2
7.3
15.1
15
12.1
15.3
15.3
15.3A 15.3B 15.3C
15.2A
PN 16
PN 25
15.2
15.2B
15.2C
16

| Item | Article no. | Description | Quantity |
|---|---|---|---|
| 1 | | DRIVE HELIX-VE211-IE2-WE KIT | 1 |
| Note: MOTOR BRAND WILO ELEC | | | |
| 1 | | DRIVE HELIX-VE211-IE4-WE KIT | 1 |
| Note: MOTOR BRAND WILO ELEC | | | |
| 2 | 4159703 | SCREW M8X40 (4 PIECES) | 1 |
| 3 | 4172795 | LANTERNE FT115 HELIX KIT | 1 |
| 3.1 | | > M+5_6_LANTERN_ONE-PIECE_FT115_CATA | 1 |
| 3.2 | 2127604 | > EYELET CPL.FT HELIX(2 PIECES) | 1 |
| 3.3 | 4159692 | > COUPLING PROTECTOR FT HELIX KIT | 1 |
| 4 | 4178600 | COUPLING D.12XD.24 FT115 KIT | 1 |
| 5 | 4159707 | SCREW M8X30 (4 PIECES) | 1 |
| 6 | 4178605 | STUD BOLT M12X469 KIT | 1 |
| 6.1 | | > TIE BOLT M12-469x18x30-1.4057 | 1 |
| 6.2 | 2094647 | > NUT M12 M12 ISO4032 VP. | 1 |
| 6.3 | 2123557 | > WASHER CS-12.4-24-1.6-NFE25 (4 PIECES) | 1 |
| 7 | 4210143 | STATIONARY RING HOLDER HELIX 6" EPDM | 1 |
| 7.2 | 2127607 | > STATIONARY RING HOLDER 6" HELIX 1.4301 V | 1 |
| 7.3 | 4176513 | > O-RING FOR PUMP JACKET VP. | 1 |
| 7.4 | 2127603 | > O-RING ID.37,6x2,4 EPDM VP. | 1 |
| 7.5 | 2127602 | > O-RING ID.21,35x2 EPDM VP. | 1 |
| 8 | 4159686 | FILING/PURGING PLUG HELIX EPDM KIT | 1 |
| 9 | 4178564 | SEAL-KIT-HELIX2-4 O/E KIT | 1 |
| 10 | 4178606 | HOUSING-PIPE D.152X335 1.4304 KIT | 1 |
| 7.3 | 4176513 | > O-RING FOR PUMP JACKET VP. | 1 |
| 10.1 | | > HOUSING-PIPE Ø152-M+211/411-304 | 1 |
| 11 | 4179315 | CENTERING STAGE HELIX V2 1.4307 VP. | 1 |
| 12 | 4178568 | SHAFT EQUIPMENT HELIX V2/V4 KIT | 1 |
| 12.1 | | > NUT-H-M8-STAINLESS-STEEL A4-70 | 2 |
| 12.2 | | > SHAFT END WASHER Ø8/Ø12 316L | 1 |
| 12.3 | | > STOP COLLAR OF IMPELLER M+2/4 SINGLEBLOC | 1 |
| 12.4 | | > STOP-RUSH-1/2-D12xd2-M+316 | 2 |
| 13 | | HYDRAULIC HELIX V 211 1.4307 | 1 |
| 14 | 4178608 | SHAFT D.12X458 1.4301 VP. | 1 |
| 15 | 4174079 | PUMP HOUSING HELIX DN32 PN16 1.4301 KIT | 1 |

| Item | Article no. | Description | Quantity |
|---|---|---|---|
| 7.3 | 4176513 | > O-RING FOR PUMP JACKET VP. | 1 |
| 15.1 | | > BLASTING PPE HOUSING V-PN16-DN32-5"-304 | 1 |
| 15.2 | 4217889 | > COUNTER FLANGE-G1"-PN16-GJL KIT | 1 |
| 15.3 | 4171321 | > PRIMING/DRAIN PLUG EPDM HELIX KIT | 1 |
| 16 | 4177964 | BASEPLATE HELIX V2/4/6 PN16 VP. | 1 |

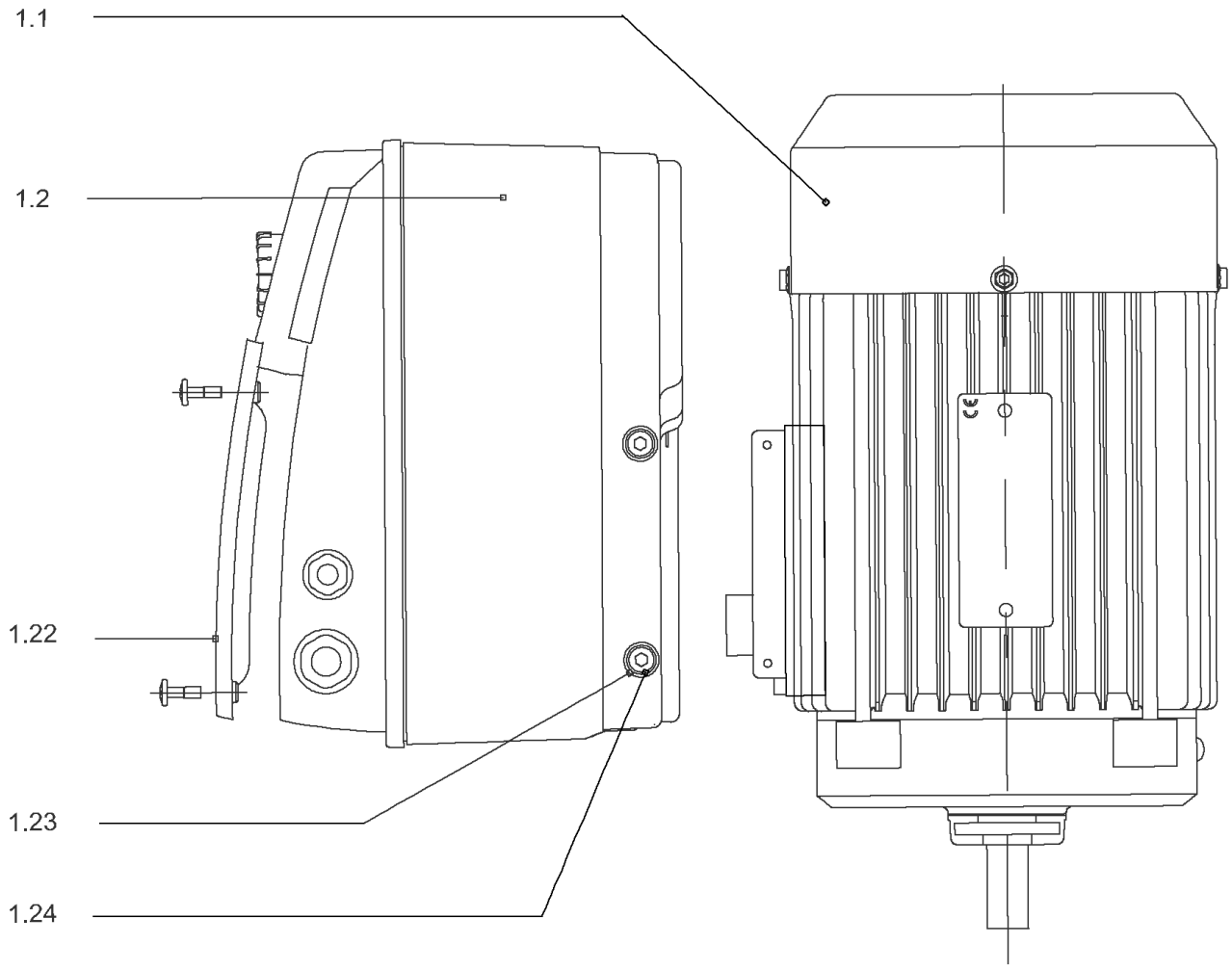
1.1
1.2
1.22
1.23
1.24

## DRIVE HELIX-VE211-IE2-WE KIT

| Item | Article no. | Description | Quantity |
|---|---|---|---|
| 1.1 | | MOTOR 1,5/2/90 3~ 380V 60HZ IE2 WE VP. | 1 |
| Note: no longer available/nicht mehrlieferbar/n'est plus disponible | | | |
| | | SPARE PARTS MOTOR:ON REQUEST | 1 |
| 1.2 | 4184865 | MODULE HELIX-VE211-IE2-WE KIT | 1 |
| 1.22 | 2054227 | > MODULE COVER/GASKET TL3/4 KIT | 1 |
| 1.23 | 4215716 | > SCREW M5X16 DIN912 8.8 A2A (4pieces) VP. | 1 |
| 1.24 | 2057978 | > RONDELLE A5,3 DIN6797 FST ZN (4 PIECES) | 1 |

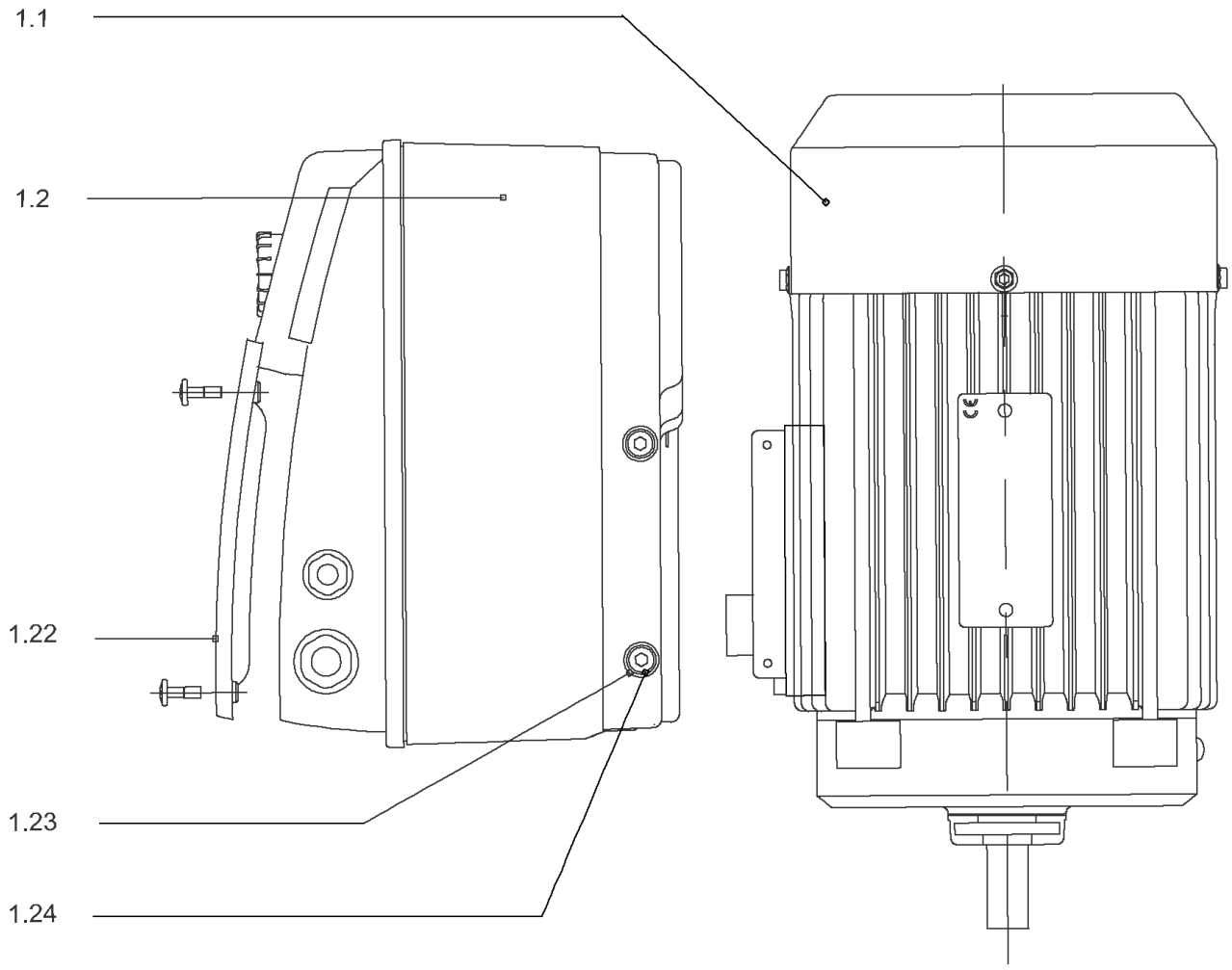
1.1
1.2
1.22
1.23
1.24

## DRIVE HELIX-VE211-IE4-WE KIT

| Item | Article no. | Description | Quantity |
|---|---|---|---|
| 1.1 | 4207918 | MOTOR 1.5/2/90 3~ 380V 60HZ IE4 WE VP. | 1 |
| | | SPARE PARTS MOTOR:ON REQUEST | 1 |
| 1.2 | 4213729 | MODULE HELIX-VE211-IE4-WE KIT | 1 |
| 1.22 | 2054227 | > MODULE COVER/GASKET TL3/4 KIT | 1 |
| 1.23 | 4215716 | > SCREW M5X16 DIN912 8.8 A2A (4pieces) VP. | 1 |
| 1.24 | 2057978 | > RONDELLE A5,3 DIN6797 FST ZN (4 PIECES) | 1 |

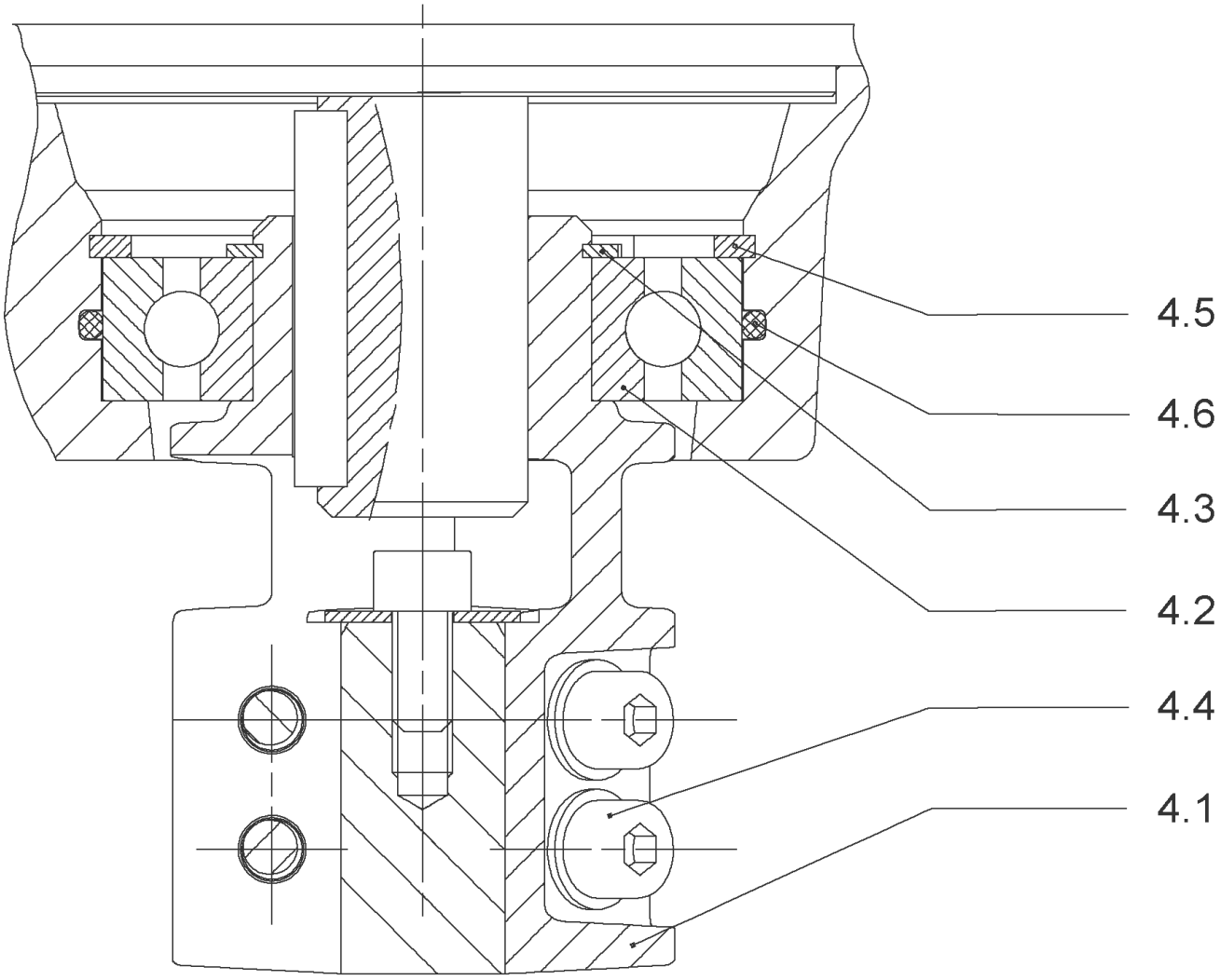
4.5
4.6
4.3
4.2
4.4
4.1

## COUPLING D.12XD.24 FT115 KIT (4178600)

| Item | Article no. | Description | Quantity |
|---|---|---|---|
| 4.1 | | COUPLING-M+ Ø12XØ24-FT115-MACHINED | 1 |
| 4.2 | 2131023 | BALL BEARING 6207/ZZ-C3(HT)VP. | 1 |
| 4.3 | 4234254 | CIRCLIP-FOR-SHAFT-D35x1.5 VP. | 1 |
| 4.4 | 4157726 | SCREW KIT M8X30 (4 PIECES) | 1 |
| 4.5 | 4234251 | CIRCLIP-D72x2.5 VP. | 1 |
| 4.6 | 4234246 | O-RING 72X3 VP. | 1 |
| | | NOMEL CONTACT WASHER 8x16x1,4 STEEL ZC | 1 |

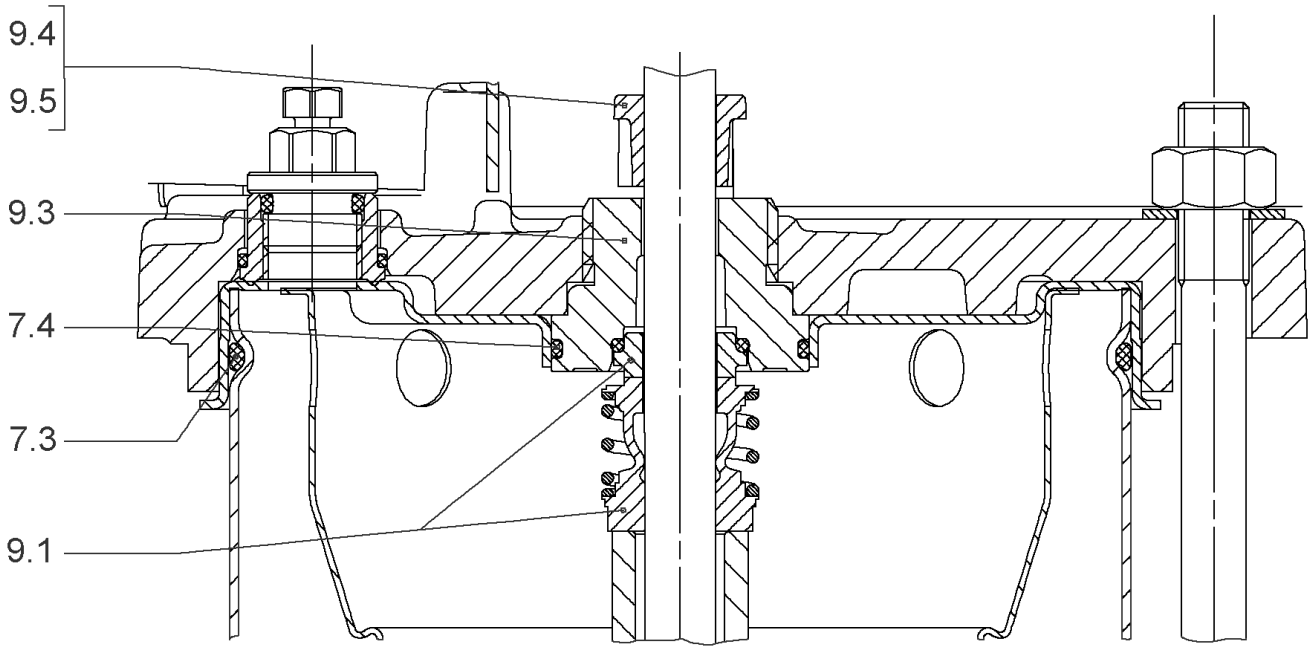
9.4
9.5
9.3
7.4
7.3
9.1

## SEAL-KIT-HELIX2-4 O/E KIT (4178564)

| Item | Article no. | Description | Quantity |
|---|---|---|---|
| 7.3 | 4176513 | O-RING FOR PUMP JACKET VP. | 1 |
| 7.4 | 2127603 | O-RING ID.37,6x2,4 EPDM VP. | 1 |
| 9.1 | 4178563 | M.SEAL.HELIX2-4 O/E VP. | 1 |
| 9.3 | 4178561 | RING HOLDER Ø22 1.4301 VP. | 1 |
| 9.5 | 4178562 | DRIVE RING D.22/12.2X10 MACH.VP. | 1 |
| 9.4 | 4176520 | SCREW CH M5x5 A4-70 ( 3PIECES ) | 1 |

13.3
13.3
13.2
13.3
13.3
13.3
13.3
13.3
13.3
13.2
13.1
11
10
9
8
7
6
5
4
3
2
1

| Item | Article no. | Description | Quantity |
|---|---|---|---|
| 13.1 | 4179316 | STAGE HELIX 2 1.4301 KIT | 1 |
| | | > MACH.STG-CASING-WOGV-WNR-M+2-4-304 | 1 |
| | | > IMPELLER-M+2-304 | 1 |
| 13.2 | 4179317 | STAGE BEARING HELIX 2 1.4307 KIT | 1 |
| | | > MACH.BEARING-STG-CASING-WNR-M+2-304 | 1 |
| | | > IMPELLER-M+2-304 | 1 |
| | | > SHAFT SLEEVE SPACER Ø15,35x10,305-304 | 1 |
| | | > SHAFT-SLEEVE-D12xD16x14-CW | 1 |
| 13.3 | 4179319 | INTERMEDIATE STAGE HELIX 2 1.4301 KIT | 1 |
| | | > CORPS-ETG-STD-ACR-AJR-USIN.M+2-304 | 1 |
| | | > IMPELLER-M+2-304 | 1 |
| | | > IMPELLER SPACER Ø12,05X14,85-L24,285-304 | 1 |

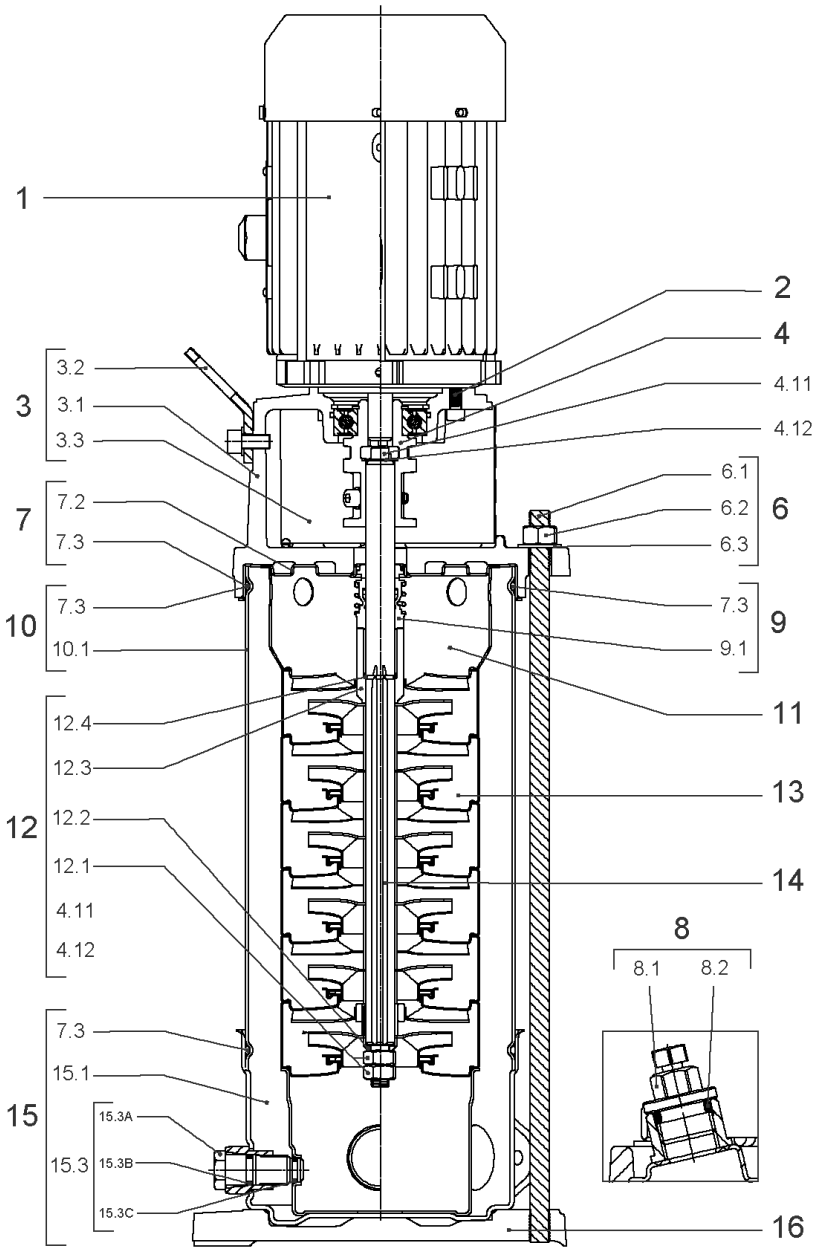
1
2
4
4.11
4.12
3
3.2
3.1
3.3
7
7.2
7.3
10
7.3
10.1
12
12.4
12.3
12.2
12.1
4.11
4.12
15
7.3
15.1
15.3
15.3A
15.3B
15.3C
6
6.1
6.2
6.3
9
7.3
9.1
11
13
14
8
8.1
8.2
16

## HELIX VE211-1/16/E/S (4201566)

| Item | Article no. | Description | Quantity |
|---|---|---|---|
| 1 | | DRIVE HELIX-VE211-IE4-WE KIT | 1 |
| Note: MOTOR BRAND WILO ELEC | | | |
| | | SPARE PARTS MOTOR:ON REQUEST | 1 |
| 2 | 4159707 | SCREW M8X30 (4 PIECES) | 1 |
| 3 | 4213784 | LANTERN FT115 HELIX KIT | 1 |
| 3.1 | | > LANT-MOT-VMI-ReDTC6"-FT115-MACHINED+CATA | 1 |
| 3.2 | 4184852 | > EYELET CPL.FT HELIX (2 PIECES) | 1 |
| 3.3 | 4213782 | > COUPLING PROTECTOR FT115/130 HELIX KIT | 1 |
| 4 | 4178600 | COUPLING D.12XD.24 FT115 KIT | 1 |
| 6 | 4178605 | STUD BOLT M12X469 KIT | 1 |
| 6.1 | | > TIE BOLT M12-469x18x30-1.4057 | 1 |
| 6.2 | 2094647 | > NUT M12 M12 ISO4032 VP. | 1 |
| 6.3 | 2123557 | > WASHER CS-12.4-24-1.6-NFE25 (4 PIECES) | 1 |
| 7 | 4212722 | STATIONARY RING HOLDER HELIX D23 ReDTC | 1 |
| 7.2 | 4212720 | > STATIONARY RING HOLDER HELIX D23 VP. | 1 |
| 7.3 | 4176513 | > O-RING FOR PUMP JACKET VP. | 1 |
| 8 | 4212724 | FILING/PURGING PLUG HELIX ReDTC KIT | 1 |
| 8.1 | | > FILLING PLUG MVI6"-304 | 1 |
| 8.2 | 4177800 | > O-RING EPDM PLUG HELIX VP. | 1 |
| 9 | 4212726 | MECH.SEAL HELIX V2/4 O/E ReDTC KIT | 1 |
| 9.1 | 4178563 | > M.SEAL.HELIX2-4 O/E VP. | 1 |
| 7.3 | 4176513 | > O-RING FOR PUMP JACKET VP. | 1 |
| 10 | 4178606 | HOUSING-PIPE D.152X335 1.4304 KIT | 1 |
| 7.3 | 4176513 | > O-RING FOR PUMP JACKET VP. | 1 |
| 10.1 | | > HOUSING-PIPE Ø152-M+211/411-304 | 1 |
| 11 | 4179315 | CENTERING STAGE HELIX V2 1.4307 VP. | 1 |
| 12 | 4212729 | SHAFT EQUIPMENT HELIX V2/4 ReDTC KIT | 1 |
| 12.1 | | > NUT-H-M8-STAINLESS-STEEL A4-70 | 1 |
| 12.2 | | > SHAFT END WASHER Ø8/Ø12 316L | 1 |
| 12.3 | | > 1/2-SNAP-RING-2/4M3-316L | 1 |
| 12.4 | | > STOP-RUSH-1/2-D12xd2-M+316 | 1 |
| 4.11 | | > SCREW CHC-M6X14-8.8-ISO4762-GEOMET500A | 1 |
| 4.12 | | > WASHER D.24 L6U ZINK | 1 |
| 13 | | HYDRAULIC HELIX V 211 1.4307 | 1 |

| Item | Article no. | Description | Quantity |
|---|---|---|---|
| 14 | 4213776 | SHAFT D.12X406 HELIX 1.4057 VP. | 1 |
| 15 | 4174079 | PUMP HOUSING HELIX DN32 PN16 1.4301 KIT | 1 |
| 7.3 | 4176513 | > O-RING FOR PUMP JACKET VP. | 1 |
| 15.1 | | > BLASTING PPE HOUSING V-PN16-DN32-5"-304 | 1 |
| 15.2 | 4217889 | > COUNTER FLANGE-G1"-PN16-GJL KIT | 1 |
| 15.3 | 4171321 | > PRIMING/DRAIN PLUG EPDM HELIX KIT | 1 |
| 16 | 4177964 | BASEPLATE HELIX V2/4/6 PN16 VP. | 1 |

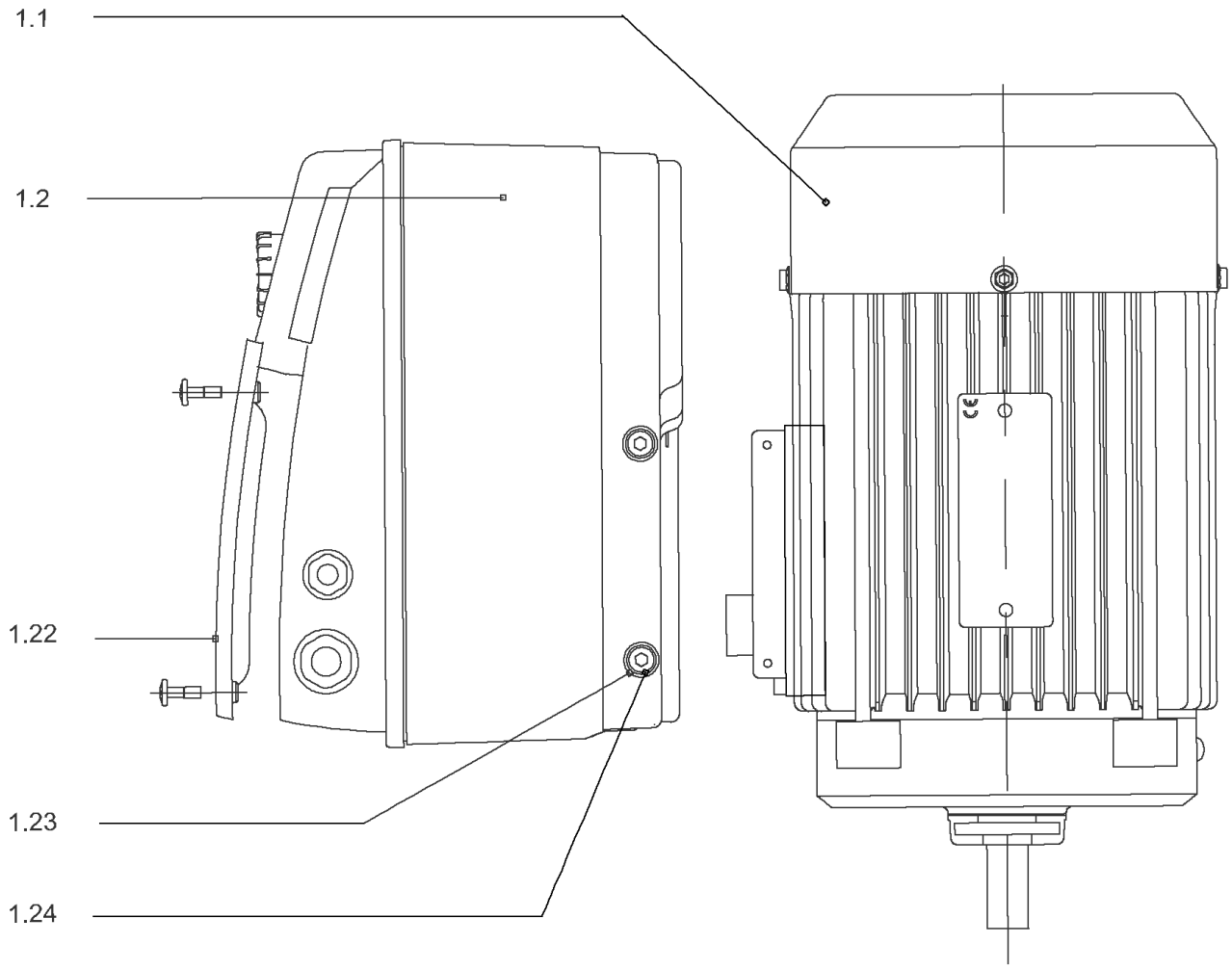
1.1
1.2
1.22
1.23
1.24

## DRIVE HELIX-VE211-IE4-WE KIT

| Item | Article no. | Description | Quantity |
|---|---|---|---|
| 1.1 | 4207918 | MOTOR 1.5/2/90 3~ 380V 60HZ IE4 WE VP. | 1 |
| | | SPARE PARTS MOTOR:ON REQUEST | 1 |
| 1.2 | 4213729 | MODULE HELIX-VE211-IE4-WE KIT | 1 |
| 1.22 | 2054227 | > MODULE COVER/GASKET TL3/4 KIT | 1 |
| 1.23 | 4215716 | > SCREW M5X16 DIN912 8.8 A2A (4pieces) VP. | 1 |
| 1.24 | 2057978 | > RONDELLE A5,3 DIN6797 FST ZN (4 PIECES) | 1 |

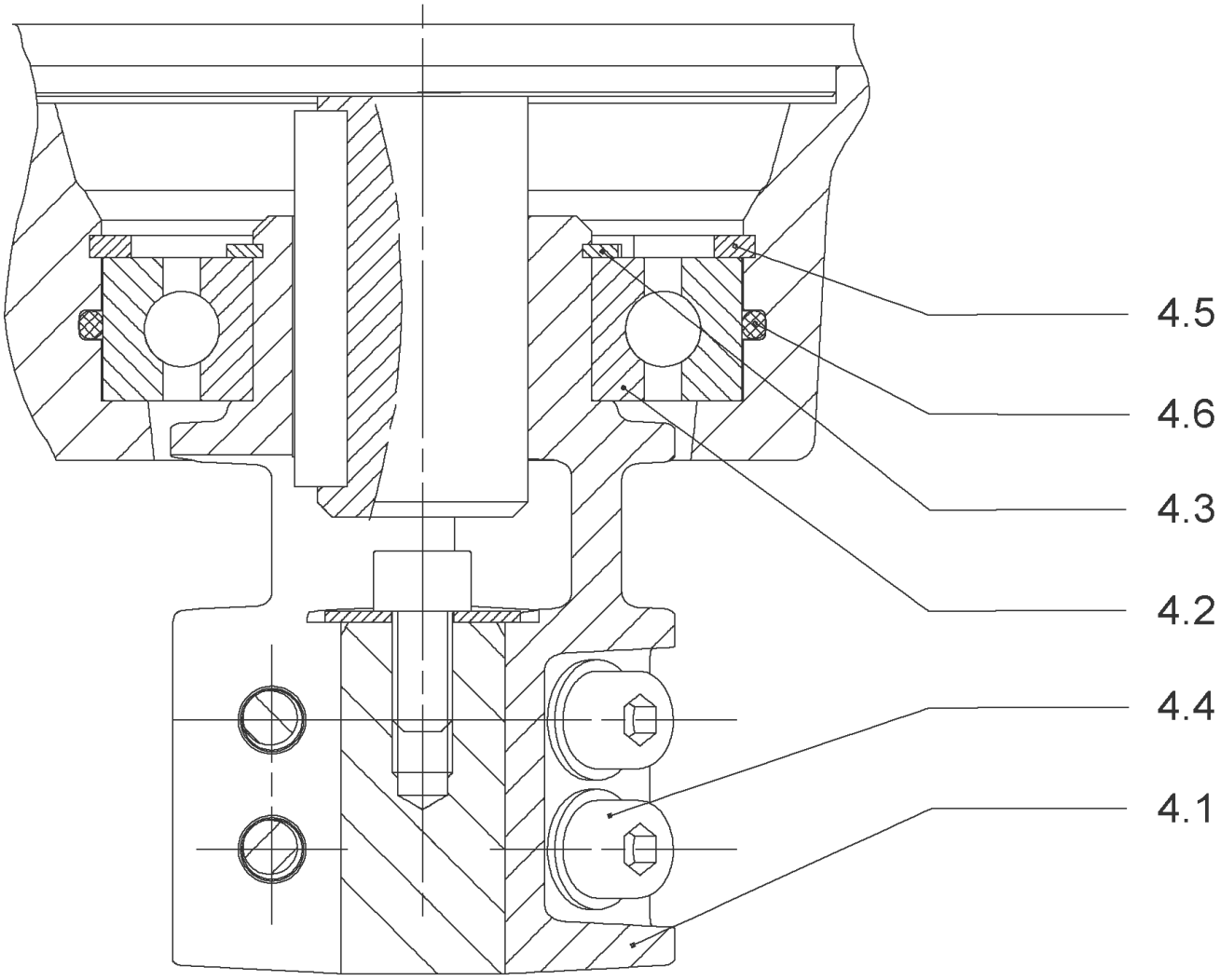
4.5
4.6
4.3
4.2
4.4
4.1

## COUPLING D.12XD.24 FT115 KIT (4178600)

| Item | Article no. | Description | Quantity |
|---|---|---|---|
| 4.1 | | COUPLING-M+ Ø12XØ24-FT115-MACHINED | 1 |
| 4.2 | 2131023 | BALL BEARING 6207/ZZ-C3(HT)VP. | 1 |
| 4.3 | 4234254 | CIRCLIP-FOR-SHAFT-D35x1.5 VP. | 1 |
| 4.4 | 4157726 | SCREW KIT M8X30 (4 PIECES) | 1 |
| 4.5 | 4234251 | CIRCLIP-D72x2.5 VP. | 1 |
| 4.6 | 4234246 | O-RING 72X3 VP. | 1 |
| | | NOMEL CONTACT WASHER 8x16x1,4 STEEL ZC | 1 |

13.3
13.3
13.2
13.3
13.3
13.3
13.3
13.3
13.3
13.2
13.1
11
10
9
8
7
6
5
4
3
2
1

| Item | Article no. | Description | Quantity |
|---|---|---|---|
| 13.1 | 4179316 | STAGE HELIX 2 1.4301 KIT | 1 |
| | | > MACH.STG-CASING-WOGV-WNR-M+2-4-304 | 1 |
| | | > IMPELLER-M+2-304 | 1 |
| 13.2 | 4179317 | STAGE BEARING HELIX 2 1.4307 KIT | 1 |
| | | > MACH.BEARING-STG-CASING-WNR-M+2-304 | 1 |
| | | > IMPELLER-M+2-304 | 1 |
| | | > SHAFT SLEEVE SPACER Ø15,35x10,305-304 | 1 |
| | | > SHAFT-SLEEVE-D12xD16x14-CW | 1 |
| 13.3 | 4179319 | INTERMEDIATE STAGE HELIX 2 1.4301 KIT | 1 |
| | | > CORPS-ETG-STD-ACR-AJR-USIN.M+2-304 | 1 |
| | | > IMPELLER-M+2-304 | 1 |
| | | > IMPELLER SPACER Ø12,05X14,85-L24,285-304 | 1 |

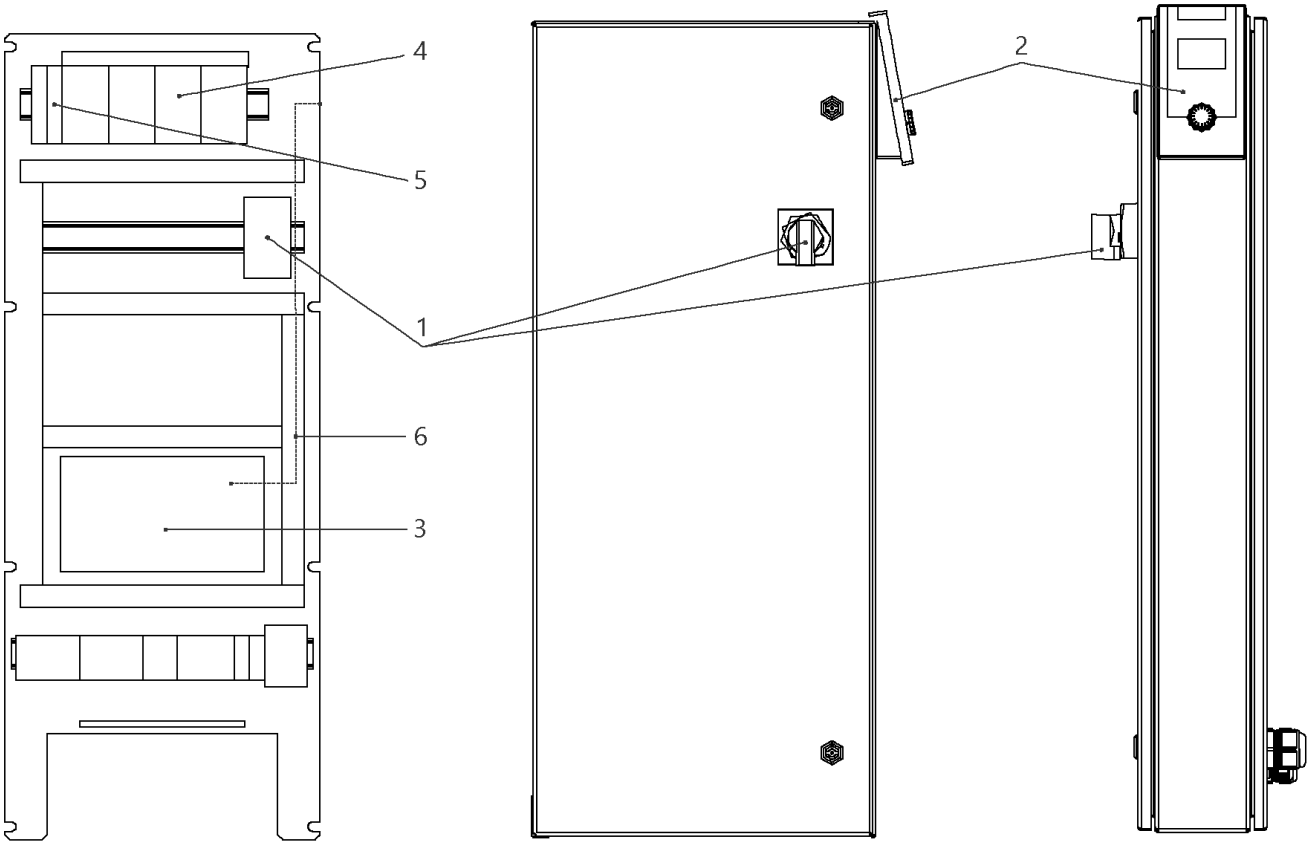
4
5
1
6
3
2

## W-CTRL-SCE-B-3x0,55-1,5KW-T4-FM-ND1

| Item | Article no. | Description | Quantity |
|---|---|---|---|
| 1 | 2104470 | MAIN SWITCH OT40F3 L250 KIT | 1 |
| 2 | 4184784 | CONTROL PANEL HMI SC KIT | 1 |
| 2 | 4185259 | ASSEMBLY DISPLAY SC PKG VP. | 1 |
| 3 | 4185257 | ASSEMBLY CPU SCe Booster VP. | 1 |
| 4 | 2051217 | AUTOM.CIRCUIT BREAKER S203 B16 TO7,5kW | 1 |
| 5 | 2046288 | CIRCUIT BREAKER S201 B16 | 1 |
| 6 | 4197081 | CABLE RJ45 CAT6 0,5M RED SC-PANEL VP. | 1 |

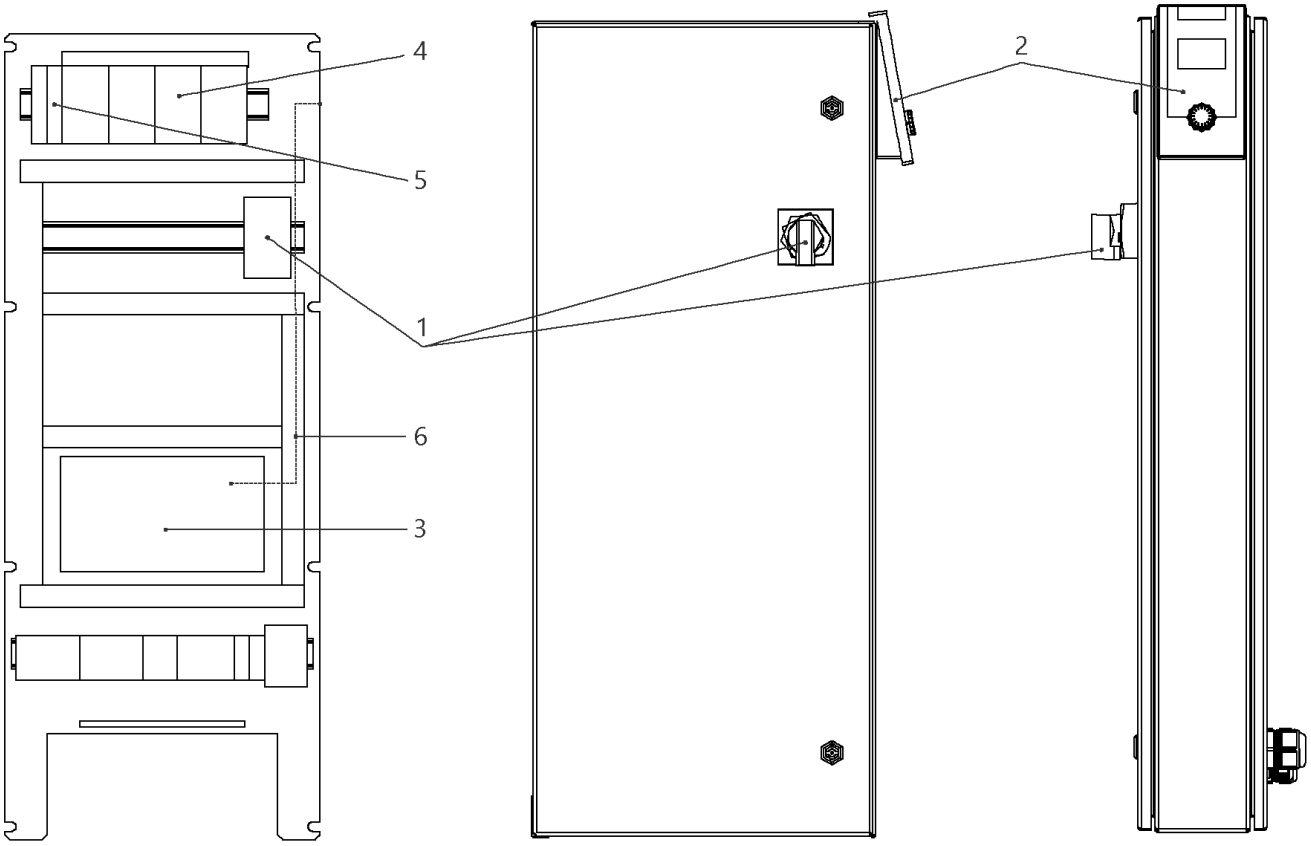
4
5
1
6
3
2

## W-CTRL-SCE-B-3x10A-T34-FM-ND1-AVC-PKG (2541914)

| Item | Article no. | Description | Quantity |
|---|---|---|---|
| 1 | 2104473 | MAIN SWITCH OT63F3 L105 KIT | 1 |
| Note: TO / BIS / JUSQU'AU 30/06/2015 | | | |
| 1 | 2104470 | MAIN SWITCH OT40F3 L250 KIT | 1 |
| Note: FROM / AB / À PARTIR DU 01/07/2015 | | | |
| 2 | 4184784 | CONTROL PANEL HMI SC KIT | 1 |
| 2 | 4185259 | ASSEMBLY DISPLAY SC PKG VP. | 1 |
| Note: DISPLAY ALONE / PLATINE SEULE | | | |
| 3 | 4185257 | ASSEMBLY CPU SCe Booster VP. | 1 |
| 4 | 2119861 | AUTOMATIC CIRCUIT BREAKER S203 B13 3POL. | 1 |
| 5 | 2046288 | CIRCUIT BREAKER S201 B16 | 1 |
| 6 | 4197081 | CABLE RJ45 CAT6 0,5M RED SC-PANEL VP. | 1 |

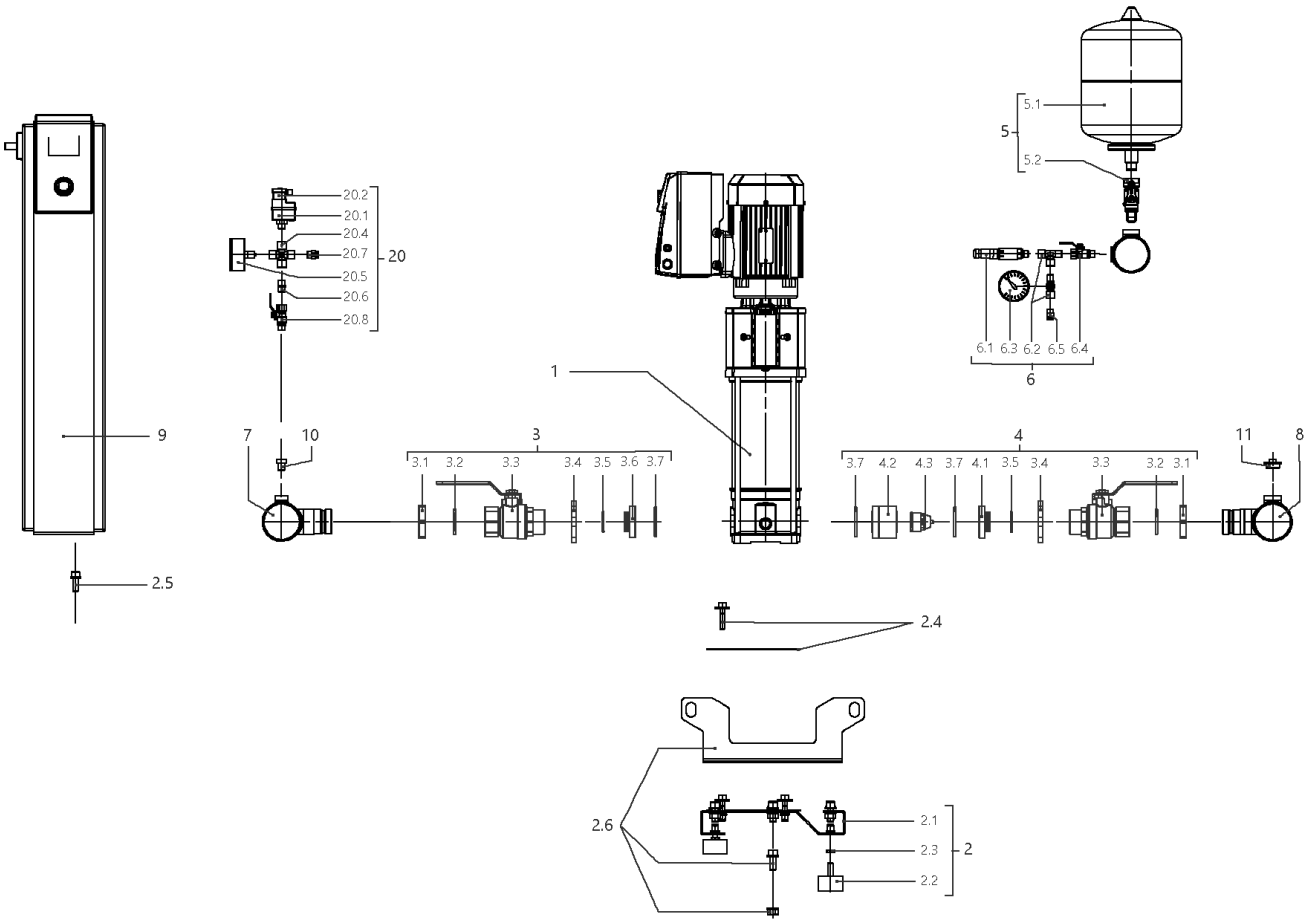
5.1
5
5.2
20.2
20.1
20.4
20.7
20
20.5
20.6
20.8
6.1 6.3 6.2 6.5 6.4
6
1
9
7
10
3
3.1 3.2 3.3 3.4 3.5 3.6 3.7
4
3.7 4.2 4.3 3.7 4.1 3.5 3.4 3.3 3.2 3.1
11
8
2.5
2.4
2.6
2.1
2.3
2
2.2

## SiBoost Smart 3HELIX VE403 (2537338)

| Item | Article no. | Description | Quantity |
|---|---|---|---|
| 1 | | HELIX VE403-1/16/E/S | 1 |
| Note: TO / BIS / JUSQU'AU 31/03/2016 | | | |
| 1 | 4201567 | HELIX VE403-1/16/E/S | 1 |
| Note: FROM / AB / À PARTIR DU 01/04/2016 | | | |
| 2 | 4200137 | BASE PLATE DE3 1150x300 M10 KIT | 1 |
| 2.1 | | > BASEPLATE_3x4/6/10V_E300_1150x300BOX_150 | 1 |
| 2.2 | 2028654 | > VIBRATION DAMPER D.50X30 M10X28 | 1 |
| 2.3 | 2028281 | > NUT M10 DIN936 (ISO4035) 17H VZ | 1 |
| 2.4 | 4199875 | > HOLDER PUMP Siboost Helix V2/4 KIT | 1 |
| 2.5 | 4197084 | > HOLDER SWITCHBOX WILO Smart Control KIT | 1 |
| 2.6 | 4197085 | > LIFTING Siboost HELIX SC KIT | 1 |
| 3 | 4199876 | SUCTION SIDE Siboost Helix V2/4/6 KIT | 1 |
| 3.1 | 2032610 | > NUT G11/4 MS VP. | 1 |
| 3.2 | 2032611 | > O-RING ID.36,09X3,53N DIN3771 E7502 | 1 |
| 3.3 | 2507646 | > BALL VALVE G11/4"M-F-W.HANDLE 1/4-TURN | 1 |
| 3.4 | 2032613 | > SCREWED FLANGE G1 1/4" LK-75 ST37VZ | 1 |
| 3.5 | 2032614 | > O-RING ID.29,82X2,62N DIN3771 E7502 | 1 |
| 3.6 | 2032615 | > SPACER F.I/A KUH.DN32 CUZN | 1 |
| 3.7 | 2032616 | > O-RING ID.44X3,53N DIN3771 E7502 | 1 |
| 4 | 4199877 | DELIVERY SIDE Siboost Helix V2/4/6 KIT | 1 |
| 3.1 | 2032610 | > NUT G11/4 MS VP. | 1 |
| 3.2 | 2032611 | > O-RING ID.36,09X3,53N DIN3771 E7502 | 1 |
| 3.3 | 2507646 | > BALL VALVE G11/4"M-F-W.HANDLE 1/4-TURN | 1 |
| 3.4 | 2032613 | > SCREWED FLANGE G1 1/4" LK-75 ST37VZ | 1 |
| 3.5 | 2032614 | > O-RING ID.29,82X2,62N DIN3771 E7502 | 1 |
| 4.1 | 2058116 | > SPACER F.I/A KUH.DN32 CUZN | 1 |
| 3.7 | 2032616 | > O-RING ID.44X3,53N DIN3771 E7502 | 1 |
| 4.2 | 2058115 | > HOUSING RFV(RV-IN) DN32 SGS/DRS | 1 |
| 4.3 | 2027870 | > NON-RETURN-DEVICE INSERT DN32(MTR) | 1 |
| 5 | 2032642 | DIAPHREM TANK 8L/PN16 DIN4807/T5 KIT | 1 |
| 5.1 | 2045914 | > DIAPHREM TANK 8L TYP-DD 16BAR | 1 |
| 5.2 | 2027853 | > FLOW FITTING G3/4 FOR DIAPHRAGM VES. | 1 |
| 6 | 4197076 | PRESSURE SENSOR/ GAUGE 0-16BAR KIT | 1 |
| 6.1 | 2085909 | > PRESS.SENSOR 1/4" 0-16BAR 4-20MA VP. | 1 |

| Item | Article no. | Description | Quantity |
|---|---|---|---|
| 6.2 | 4197077 | > T-PIECE 1/4" VP. | 1 |
| 6.3 | 2028692 | > PRESSURE GAUGE NG63-PN16-G1/4 | 1 |
| 6.4 | 2028291 | > BALL TAP R1/4" PN42 GIACOMINI R254DL | 1 |
| 6.5 | 2028691 | > BLOWGUN 1/4" MS 30BAR VP. | 1 |
| 7 | 4200138 | PIPE DE3 2''-3x11/4"+2x1/4x900 VP. | 1 |
| 8 | 4200139 | PIPE DE3 2''-3x11/4"+2x1/4+1x3/4x900 VP. | 1 |
| 9 | | W-CTRL-SCE-B-3x0,55-1,5KW-T4-FM-ND1 | 1 |
| Note: TO / BIS / JUSQU'AU 18/05/2014 | | | |
| 9 | 2541914 | W-CTRL-SCE-B-3x10A-T34-FM-ND1-AVC-PKG | 1 |
| Note: FROM / AB / À PARTIR DU 19/05/2014 | | | |
| 10 | 4197079 | PLUG G1/4"x10 AISI304 KIT | 1 |
| 11 | 2032654 | PLUG R3/4" MS VIEGA 1751 | 1 |
| 20 | 2521150 | ASSEMBLY WMS. DE-EB. +VP | 1 |
| 20.1 | 2028652 | > PRESSURE SWITCH PS3-ASR 1/(1,3) VP. | 1 |
| 20.2 | 2130983 | > PLUG PS3-415 WITH KABEL 1,5M 2NO VP. | 1 |
| 20.4 | 2028290 | > CROSSPIECE R1/4" MS-NICKEL | 1 |
| 20.5 | 2028687 | > PRESSURE GAUGE NG63 R1/4" HI.0-6BAR | 1 |
| 20.6 | 2054268 | > DUAL NIPPLE G1/4" x G1/4" MS VP. | 1 |
| 20.7 | 2028691 | > BLOWGUN 1/4" MS 30BAR VP. | 1 |
| 20.8 | 2028291 | > BALL TAP R1/4" PN42 GIACOMINI R254DL | 1 |

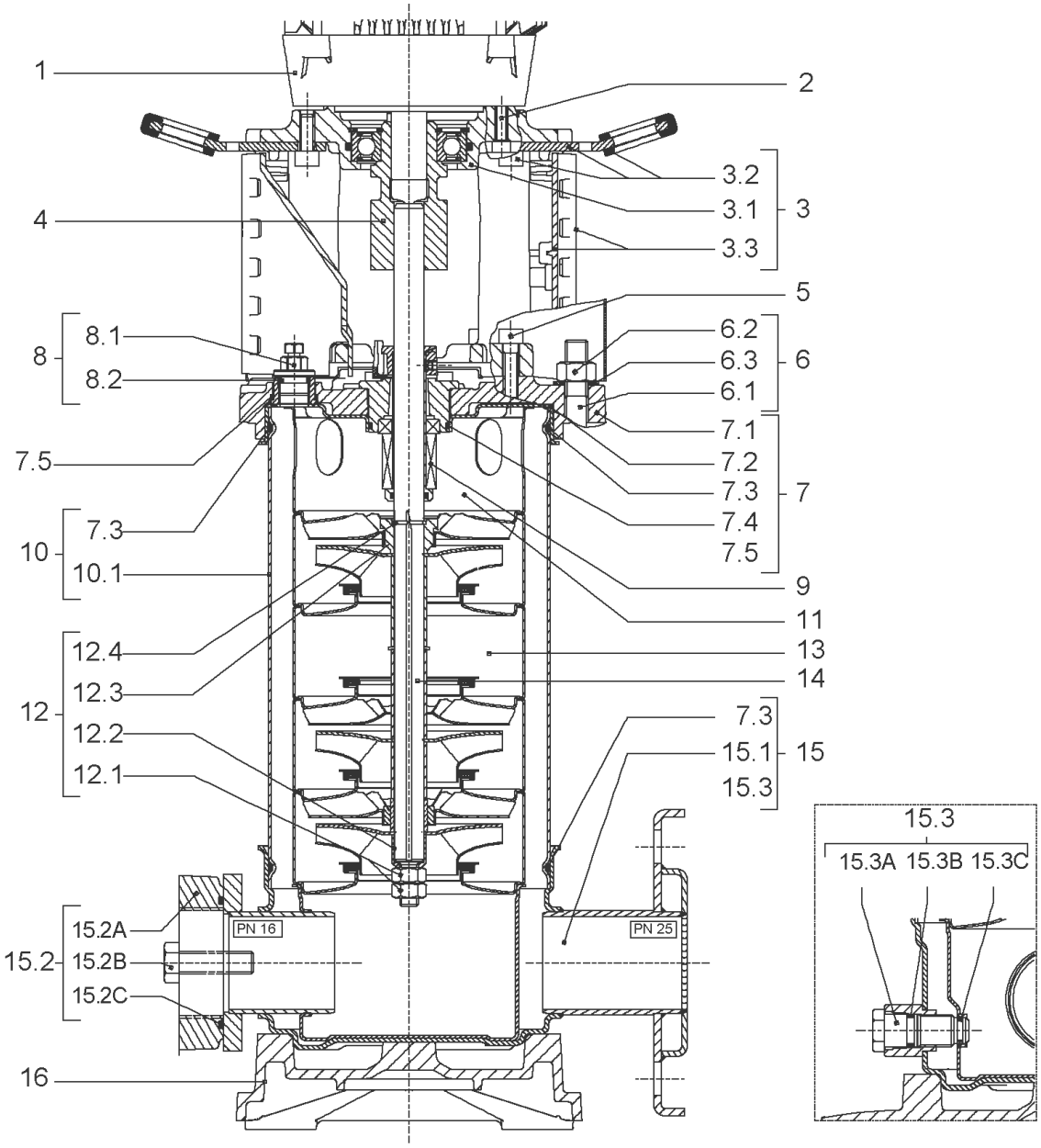
1
2
3.2
3.1
3
3.3
4
5
8.1
8
8.2
6.2
6.3
6
6.1
7.1
7.5
7.2
7.3
7
7.4
7.3
10
7.5
10.1
9
11
12.4
13
12.3
14
12
7.3
12.2
15.1
15
12.1
15.3
15.3
15.3A 15.3B 15.3C
15.2A
PN 16
PN 25
15.2
15.2B
15.2C
16

| Item | Article no. | Description | Quantity |
|---|---|---|---|
| 1 | | DRIVE HELIX-VE403-IE2-WE KIT | 1 |
| Note: MOTOR BRAND WILO ELEC | | | |
| 1 | | DRIVE HELIX-VE403-IE4-WE KIT | 1 |
| Note: MOTOR BRAND WILO ELEC | | | |
| 2 | 4159702 | SCREW M6X30 (4 PIECES) | 1 |
| 3 | 4171325 | LANTERN MONOBLOC FT85 HELIX KIT | 1 |
| 3.1 | | > M+5_6_LANTERN_ONE-PIECE_FT85_CATA | 1 |
| 3.2 | 2127604 | > EYELET CPL.FT HELIX(2 PIECES) | 1 |
| 3.3 | 4159692 | > COUPLING PROTECTOR FT HELIX KIT | 1 |
| 4 | 4178554 | COUPLING FT 85 Ø12XØ14 KIT | 1 |
| 5 | 4159707 | SCREW M8X30 (4 PIECES) | 1 |
| 6 | 4177803 | STUD BOLT M12X263 KIT | 1 |
| 6.1 | | > TIE BOLT M12-263x18x30-1.4057 | 1 |
| 6.2 | 2094647 | > NUT M12 M12 ISO4032 VP. | 1 |
| 6.3 | 2123557 | > WASHER CS-12.4-24-1.6-NFE25 (4 PIECES) | 1 |
| 7 | 4210143 | STATIONARY RING HOLDER HELIX 6" EPDM | 1 |
| 7.2 | 2127607 | > STATIONARY RING HOLDER 6" HELIX 1.4301 V | 1 |
| 7.3 | 4176513 | > O-RING FOR PUMP JACKET VP. | 1 |
| 7.4 | 2127603 | > O-RING ID.37,6x2,4 EPDM VP. | 1 |
| 7.5 | 2127602 | > O-RING ID.21,35x2 EPDM VP. | 1 |
| 8 | 4159686 | FILING/PURGING PLUG HELIX EPDM KIT | 1 |
| 9 | 4178564 | SEAL-KIT-HELIX2-4 O/E KIT | 1 |
| 10 | 4177804 | HOUSING PIPES D.152X134 1.4301 KIT | 1 |
| 7.3 | 4176513 | > O-RING FOR PUMP JACKET VP. | 1 |
| 10.1 | | > HOUSING-PIPE Ø152-M+1001/02-304 | 1 |
| 11 | 4178566 | CENTERING STAGE-RETURN HELIX4 1.4307 VP | 1 |
| 12 | 4178568 | SHAFT EQUIPMENT HELIX V2/V4 KIT | 1 |
| 12.1 | | > NUT-H-M8-STAINLESS-STEEL A4-70 | 2 |
| 12.2 | | > SHAFT END WASHER Ø8/Ø12 316L | 1 |
| 12.3 | | > STOP COLLAR OF IMPELLER M+2/4 SINGLEBLOC | 1 |
| 12.4 | | > STOP-RUSH-1/2-D12xd2-M+316 | 2 |
| 13 | | HYDRAULIC HELIX V 403 1.4307 | 1 |
| 14 | 4178575 | SHAFT D.12X258 1.4301 VP. | 1 |
| 15 | 4174079 | PUMP HOUSING HELIX DN32 PN16 1.4301 KIT | 1 |

| Item | Article no. | Description | Quantity |
|---|---|---|---|
| 7.3 | 4176513 | > O-RING FOR PUMP JACKET VP. | 1 |
| 15.1 | | > BLASTING PPE HOUSING V-PN16-DN32-5"-304 | 1 |
| 15.2 | 4217889 | > COUNTER FLANGE-G1"-PN16-GJL KIT | 1 |
| 15.3 | 4171321 | > PRIMING/DRAIN PLUG EPDM HELIX KIT | 1 |
| 16 | 4177964 | BASEPLATE HELIX V2/4/6 PN16 VP. | 1 |

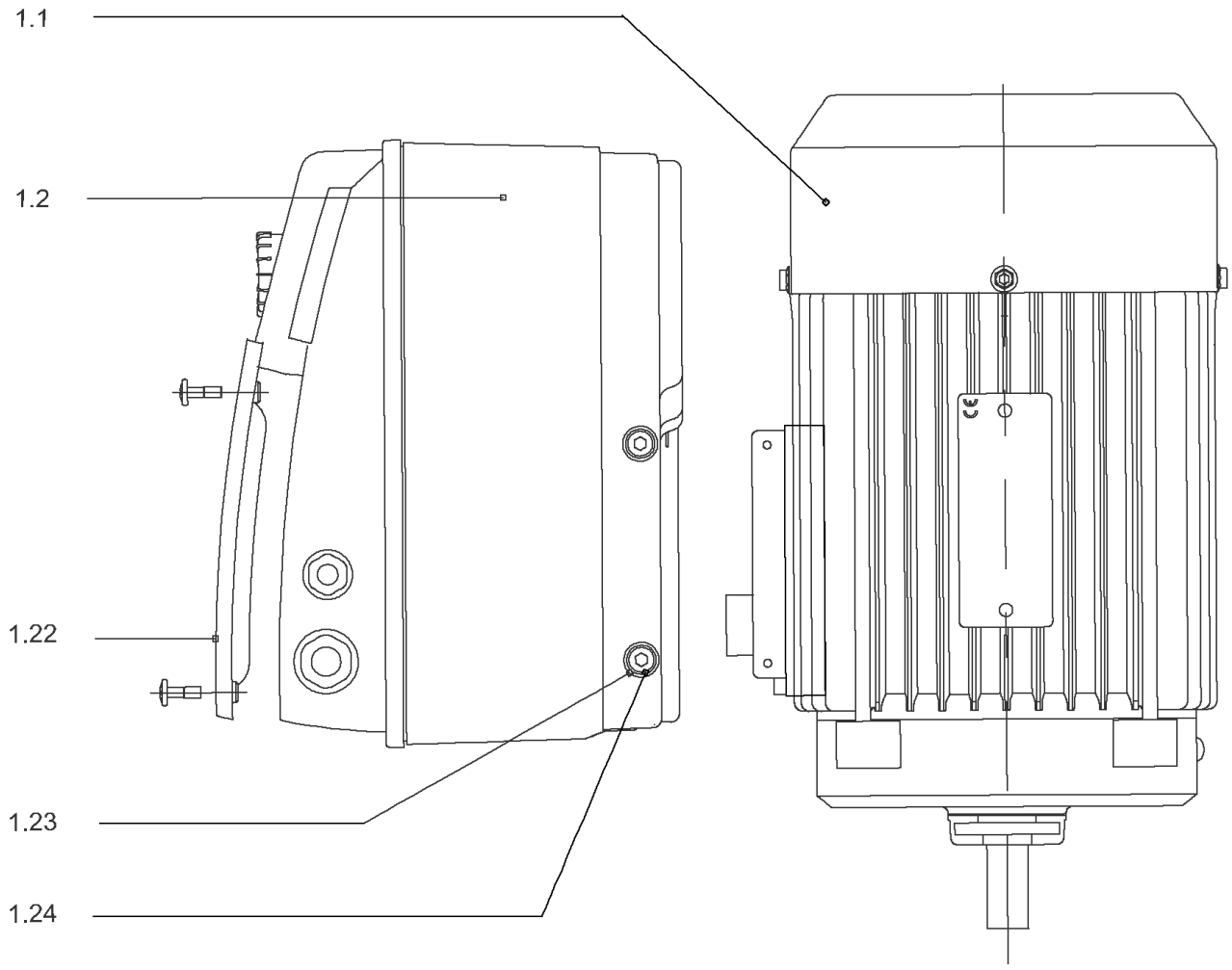
1.1
1.2
1.22
1.23
1.24

## DRIVE HELIX-VE403-IE2-WE KIT

| Item | Article no. | Description | Quantity |
|---|---|---|---|
| 1.1 | | MOTOR 0,55/2/80 3~ 380V 60HZ IE2 WE VP. | 1 |
| Note: no longer available/nicht mehrlieferbar/n'est plus disponible | | | |
| | | SPARE PARTS MOTOR:ON REQUEST | 1 |
| 1.2 | 4184869 | MODULE HELIX-VE403-IE2-WE KIT | 1 |
| 1.22 | 2054372 | > MODULE COVER TL1,TL2+GASKET KIT | 1 |
| 1.23 | 4215716 | > SCREW M5X16 DIN912 8.8 A2A (4pieces) VP. | 1 |
| 1.24 | 2057978 | > RONDELLE A5,3 DIN6797 FST ZN (4 PIECES) | 1 |

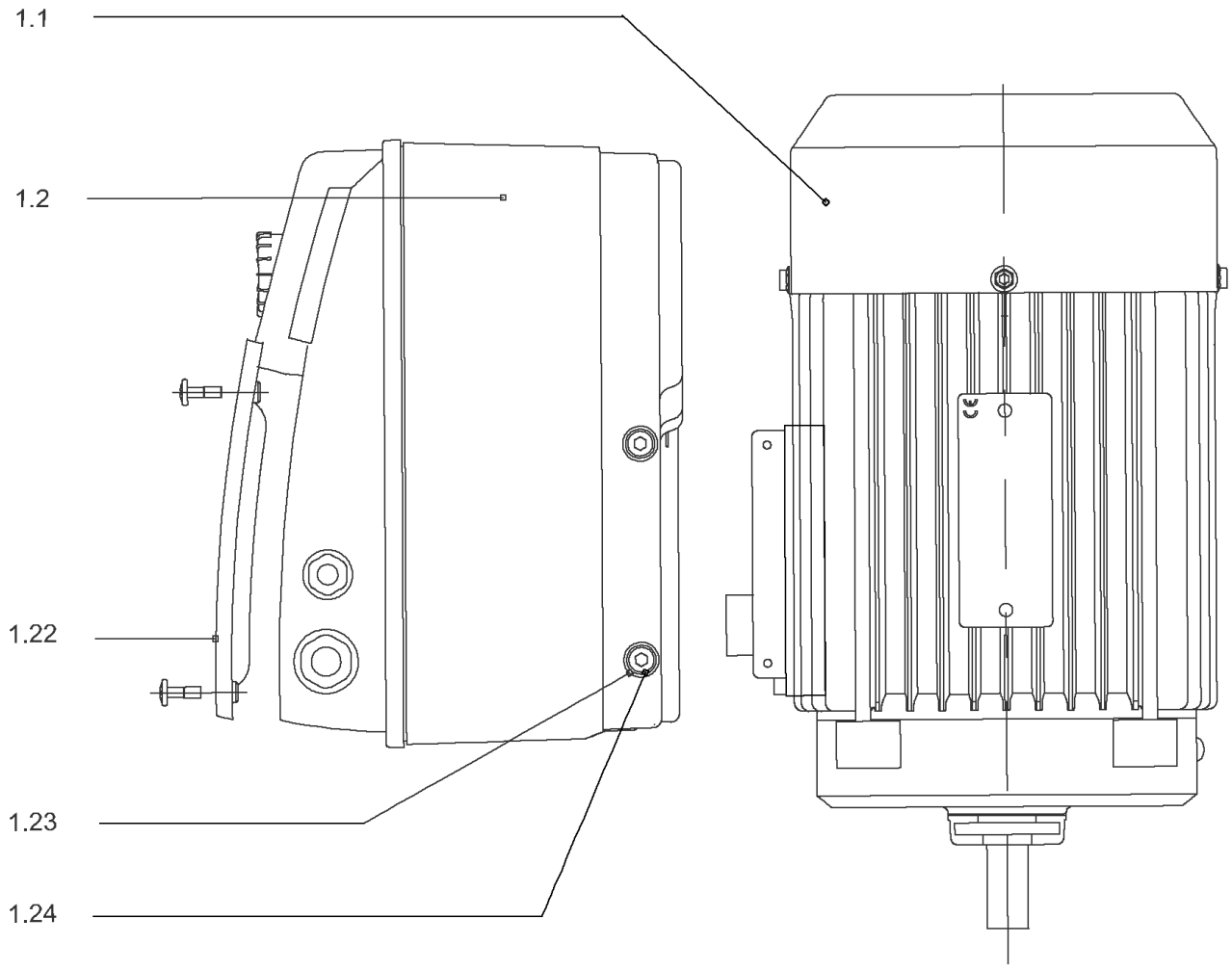
1.1
1.2
1.22
1.23
1.24

## DRIVE HELIX-VE403-IE4-WE KIT

| Item | Article no. | Description | Quantity |
|---|---|---|---|
| 1.1 | 4207912 | MOTOR 0.55/2/71 3~ 380V 60HZ IE4 WE VP. | 1 |
| | | SPARE PARTS MOTOR:ON REQUEST | 1 |
| 1.2 | 4209319 | MODULE HELIX-VE403-IE4-WE KIT | 1 |
| 1.22 | 2054372 | > MODULE COVER TL1,TL2+GASKET KIT | 1 |
| 1.23 | 4215716 | > SCREW M5X16 DIN912 8.8 A2A (4pieces) VP. | 1 |
| 1.24 | 2057978 | > RONDELLE A5,3 DIN6797 FST ZN (4 PIECES) | 1 |

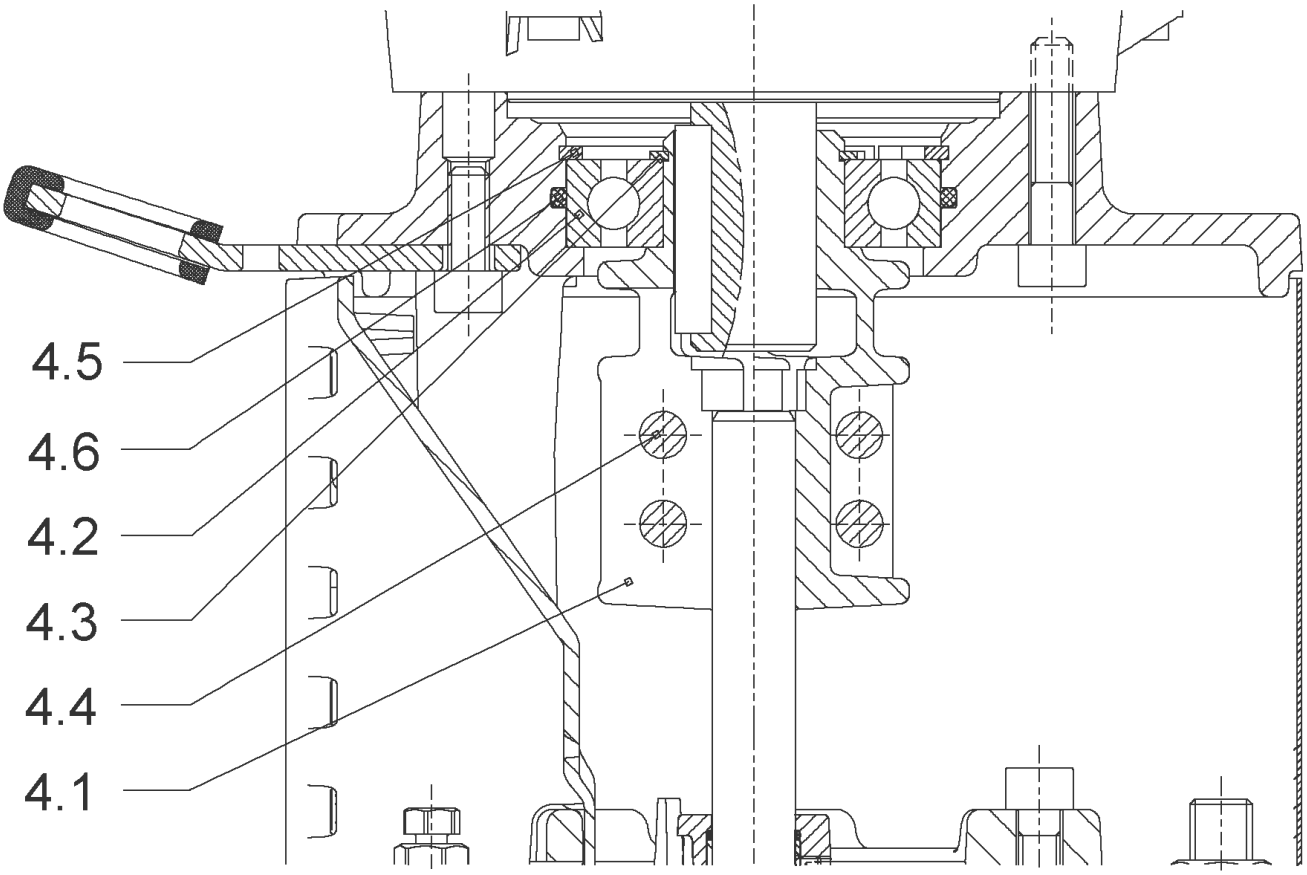
4.5
4.6
4.2
4.3
4.4
4.1

## COUPLING FT 85 Ø12XØ14 KIT (4178554)

| Item | Article no. | Description | Quantity |
|---|---|---|---|
| 4.1 | | COUPLING-M+ Ø12XØ14-FT85-MACHINED | 1 |
| 4.3 | 4208923 | CIRCLIP D25X1.2 VP. | 1 |
| 4.2 | 4177802 | BALL BEARING 6205C3-ZZ HTVP. | 1 |
| 4.4 | 4212716 | SCREW M6X20 KIT (4PIECES) | 1 |
| 4.5 | 4233124 | CIRCLIP-FOR-BORES-D52x2 VP. | 1 |
| 4.6 | 4234244 | O-RING 52X2 VP. | 1 |
| | | CONTACT-WASHER-6ETR-6,1x12,2x1,8-STEEL | 4 |

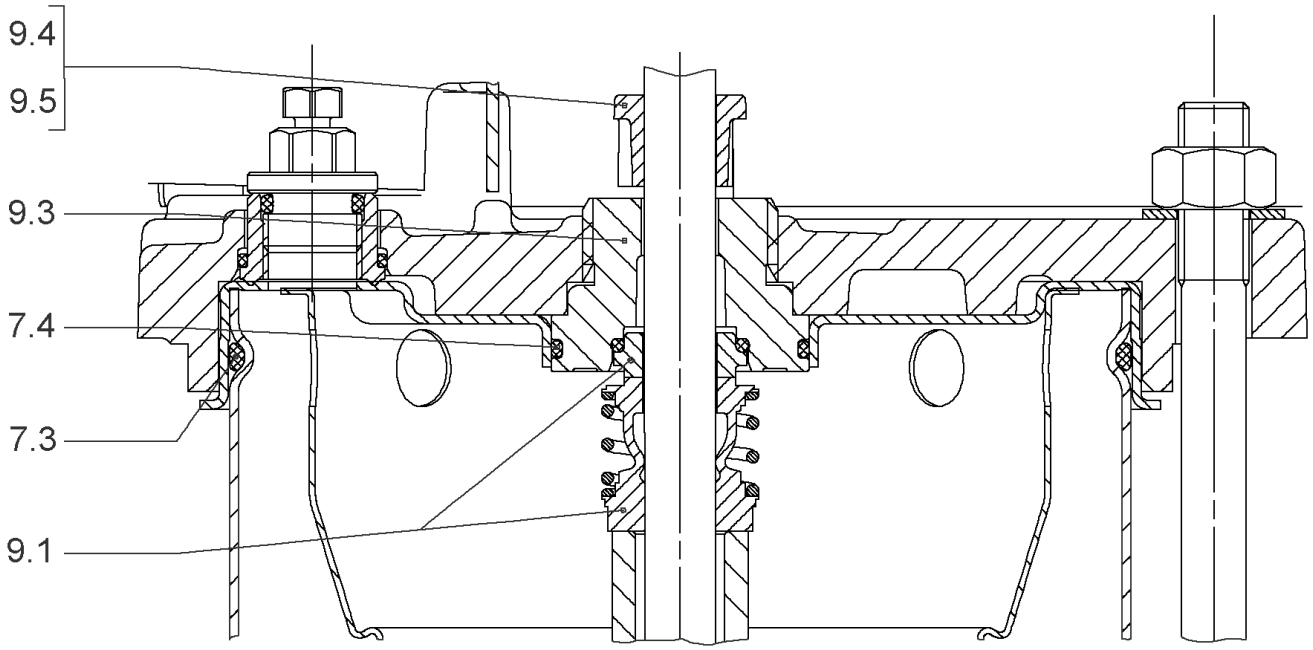
9.4
9.5
9.3
7.4
7.3
9.1

## SEAL-KIT-HELIX2-4 O/E KIT (4178564)

| Item | Article no. | Description | Quantity |
|---|---|---|---|
| 7.3 | 4176513 | O-RING FOR PUMP JACKET VP. | 1 |
| 7.4 | 2127603 | O-RING ID.37,6x2,4 EPDM VP. | 1 |
| 9.1 | 4178563 | M.SEAL.HELIX2-4 O/E VP. | 1 |
| 9.3 | 4178561 | RING HOLDER Ø22 1.4301 VP. | 1 |
| 9.5 | 4178562 | DRIVE RING D.22/12.2X10 MACH.VP. | 1 |
| 9.4 | 4176520 | SCREW CH M5x5 A4-70 ( 3PIECES ) | 1 |

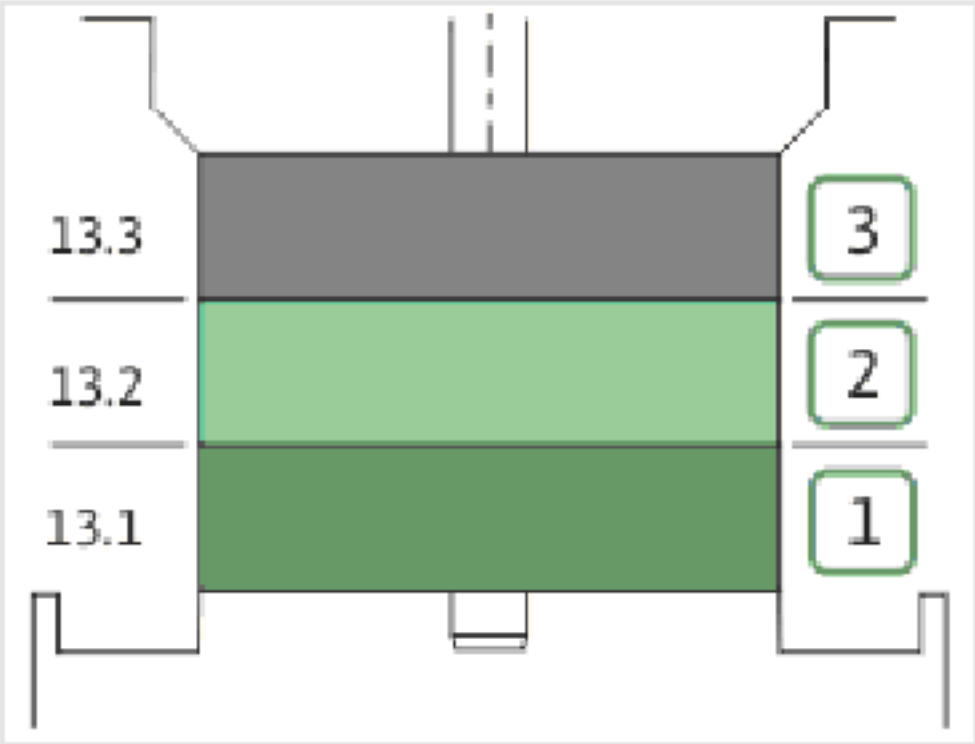
13.3
13.2
13.1
3
2
1

| Item | Article no. | Description | Quantity |
|---|---|---|---|
| 13.1 | 4178570 | STAGE HELIX 4 1.4301 KIT | 1 |
| | | > MACH.STG-CASING-WOGV-WNR-M+2-4-304 | 1 |
| | | > IMPELLER-M+4-304 | 1 |
| 13.2 | 4178569 | STAGE BEARING HELIX 4 1.4301 KIT | 1 |
| | | > MACH.BEARING-STG-CASING-WNR-M+4-304 | 1 |
| | | > IMPELLER-M+4-304 | 1 |
| | | > SHAFT SLEEVE SPACER Ø15,35x10,305-304 | 1 |
| | | > SHAFT-SLEEVE-D12xD16x14-CW | 1 |
| 13.3 | 4178574 | INTER STAGE HELIX4 1.4301< 15 stages KIT | 1 |
| | | > MACH.STD-STG-CASING-WGV+NR-M+4-304 | 1 |
| | | > IMPELLER-M+4-304 | 1 |
| | | > IMPELLER SPACER Ø12,05X14,85-L24,285-304 | 1 |

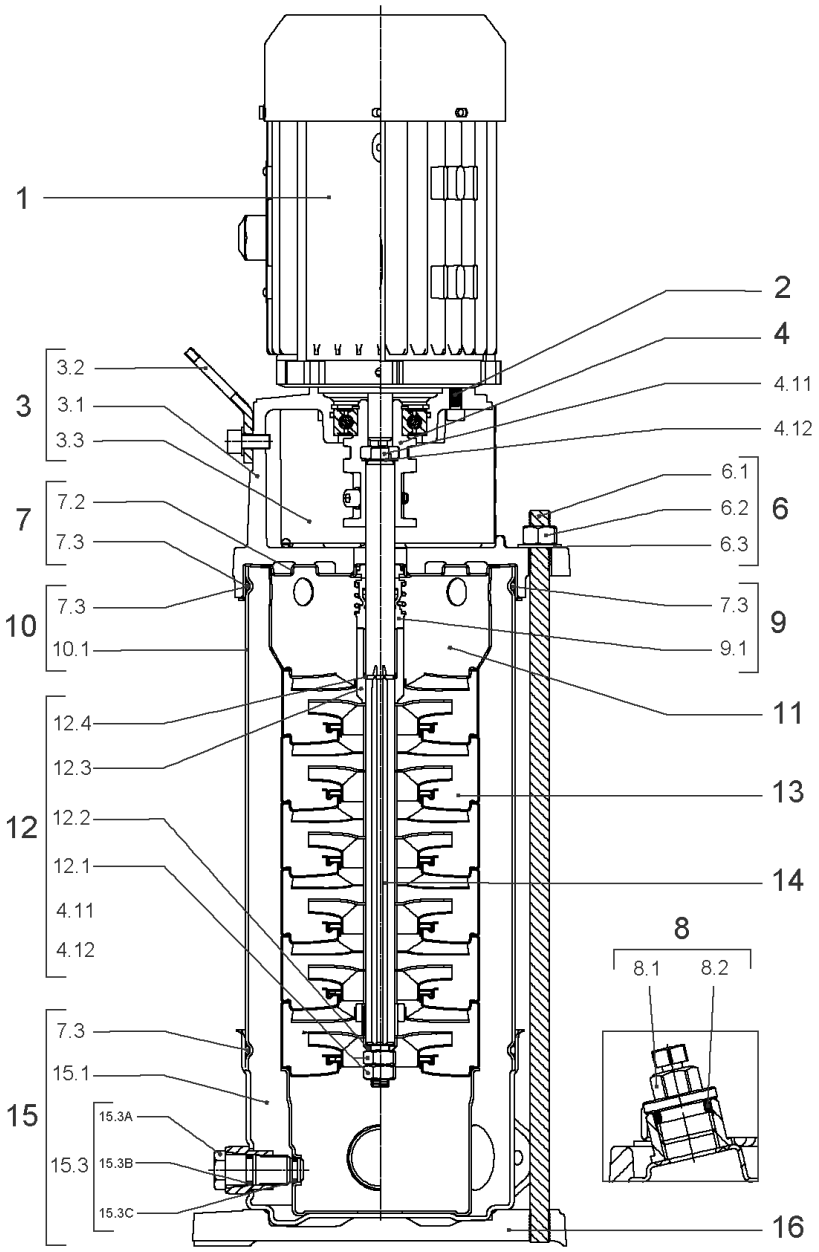
1
2
4
4.11
4.12
3
3.2
3.1
3.3
7
7.2
7.3
10
7.3
10.1
6
6.1
6.2
6.3
9
7.3
9.1
11
12
12.4
12.3
12.2
12.1
4.11
4.12
13
14
8
8.1
8.2
15
7.3
15.1
15.3
15.3A
15.3B
15.3C
16

## HELIX VE403-1/16/E/S (4201567)

| Item | Article no. | Description | Quantity |
|---|---|---|---|
| 1 | | DRIVE HELIX-VE403-IE4-WE KIT | 1 |
| Note: MOTOR BRAND WILO ELEC | | | |
| | | SPARE PARTS MOTOR:ON REQUEST | 1 |
| 2 | 4212716 | SCREW M6X20 KIT (4PIECES) | 1 |
| 3 | 4213715 | LANTERN FT85 HELIX KIT | 1 |
| 3.1 | | > LANT-MOT-VMI-ReDTC6"-FT85-MACHINED+CATA | 1 |
| 3.2 | 4184852 | > EYELET CPL.FT HELIX (2 PIECES) | 1 |
| 3.3 | 4213713 | > COUPLING PROTECTOR FT85/100 HELIX KIT | 1 |
| 4 | 4212718 | COUPLING HELIX D12 FT85 KIT | 1 |
| 6 | 4177803 | STUD BOLT M12X263 KIT | 1 |
| 6.1 | | > TIE BOLT M12-263x18x30-1.4057 | 1 |
| 6.2 | 2094647 | > NUT M12 M12 ISO4032 VP. | 1 |
| 6.3 | 2123557 | > WASHER CS-12.4-24-1.6-NFE25 (4 PIECES) | 1 |
| 7 | 4212722 | STATIONARY RING HOLDER HELIX D23 ReDTC | 1 |
| 7.2 | 4212720 | > STATIONARY RING HOLDER HELIX D23 VP. | 1 |
| 7.3 | 4176513 | > O-RING FOR PUMP JACKET VP. | 1 |
| 8 | 4212724 | FILING/PURGING PLUG HELIX ReDTC KIT | 1 |
| 8.1 | | > FILLING PLUG MVI6"-304 | 1 |
| 8.2 | 4177800 | > O-RING EPDM PLUG HELIX VP. | 1 |
| 9 | 4212726 | MECH.SEAL HELIX V2/4 O/E ReDTC KIT | 1 |
| 9.1 | 4178563 | > M.SEAL.HELIX2-4 O/E VP. | 1 |
| 7.3 | 4176513 | > O-RING FOR PUMP JACKET VP. | 1 |
| 10 | 4177804 | HOUSING PIPES D.152X134 1.4301 KIT | 1 |
| 7.3 | 4176513 | > O-RING FOR PUMP JACKET VP. | 1 |
| 10.1 | | > HOUSING-PIPE Ø152-M+1001/02-304 | 1 |
| 11 | 4178566 | CENTERING STAGE-RETURN HELIX4 1.4307 VP | 1 |
| 12 | 4212729 | SHAFT EQUIPMENT HELIX V2/4 ReDTC KIT | 1 |
| 12.1 | | > NUT-H-M8-STAINLESS-STEEL A4-70 | 1 |
| 12.2 | | > SHAFT END WASHER Ø8/Ø12 316L | 1 |
| 12.3 | | > 1/2-SNAP-RING-2/4M3-316L | 1 |
| 12.4 | | > STOP-RUSH-1/2-D12xd2-M+316 | 1 |
| 4.11 | | > SCREW CHC-M6X14-8.8-ISO4762-GEOMET500A | 1 |
| 4.12 | | > WASHER D.24 L6U ZINK | 1 |
| 13 | | HYDRAULIC HELIX V 403 1.4307 | 1 |

## HELIX VE403-1/16/E/S (4201567)

| Item | Article no. | Description | Quantity |
|---|---|---|---|
| 15 | 4174079 | PUMP HOUSING HELIX DN32 PN16 1.4301 KIT | 1 |
| 7.3 | 4176513 | > O-RING FOR PUMP JACKET VP. | 1 |
| 15.1 | | > BLASTING PPE HOUSING V-PN16-DN32-5"-304 | 1 |
| 15.2 | 4217889 | > COUNTER FLANGE-G1"-PN16-GJL KIT | 1 |
| 15.3 | 4171321 | > PRIMING/DRAIN PLUG EPDM HELIX KIT | 1 |
| 16 | 4177964 | BASEPLATE HELIX V2/4/6 PN16 VP. | 1 |

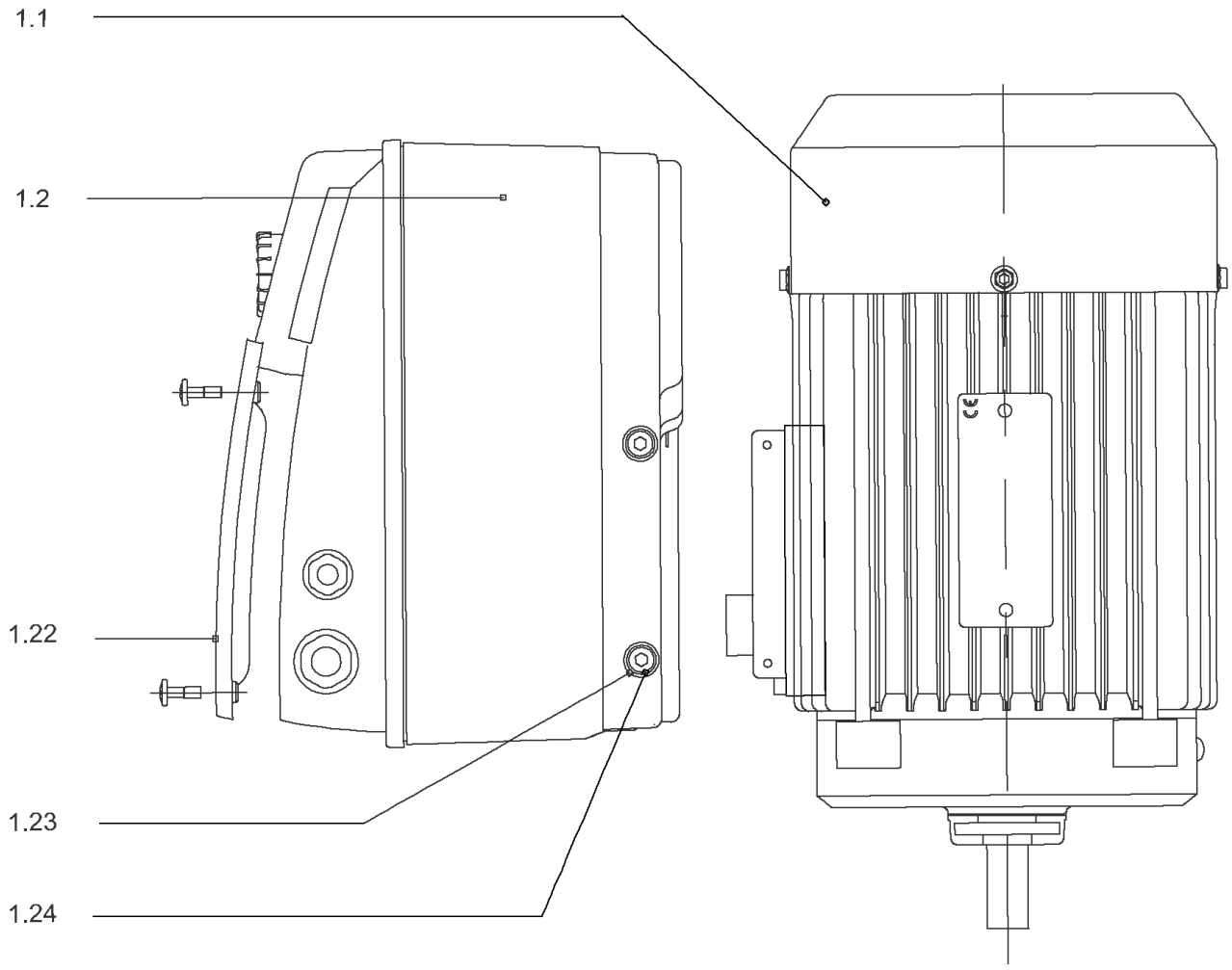
1.1
1.2
1.22
1.23
1.24

## DRIVE HELIX-VE403-IE4-WE KIT

| Item | Article no. | Description | Quantity |
|---|---|---|---|
| 1.1 | 4207912 | MOTOR 0.55/2/71 3~ 380V 60HZ IE4 WE VP. | 1 |
| | | SPARE PARTS MOTOR:ON REQUEST | 1 |
| 1.2 | 4209319 | MODULE HELIX-VE403-IE4-WE KIT | 1 |
| 1.22 | 2054372 | > MODULE COVER TL1,TL2+GASKET KIT | 1 |
| 1.23 | 4215716 | > SCREW M5X16 DIN912 8.8 A2A (4pieces) VP. | 1 |
| 1.24 | 2057978 | > RONDELLE A5,3 DIN6797 FST ZN (4 PIECES) | 1 |

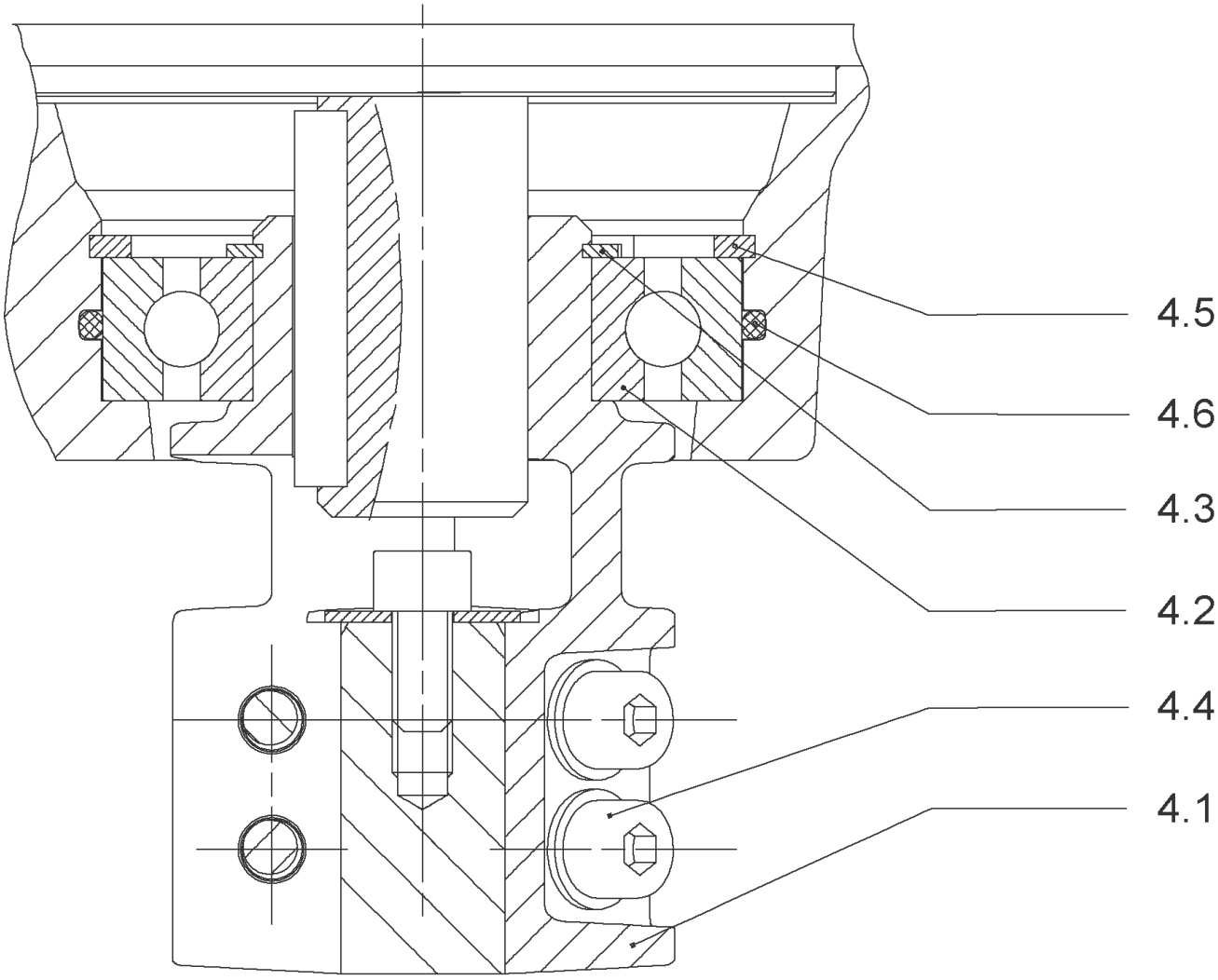
4.5
4.6
4.3
4.2
4.4
4.1

## COUPLING HELIX D12 FT85 KIT (4212718)

| Item | Article no. | Description | Quantity |
|---|---|---|---|
| 4.1 | | COUPLING-VMI-Ø12xØ14-FT85-USINE | 1 |
| 4.2 | 4177802 | BALL BEARING 6205C3-ZZ HTVP. | 1 |
| 4.3 | 4208923 | CIRCLIP D25X1.2 VP. | 1 |
| 4.4 | 4212716 | SCREW M6X20 KIT (4PIECES) | 1 |
| 4.5 | 4233124 | CIRCLIP-FOR-BORES-D52x2 VP. | 1 |
| 4.6 | 4234244 | O-RING 52X2 VP. | 1 |
| | | CONTACT-WASHER-6ETR-6,1x12,2x1,8-STEEL | 1 |

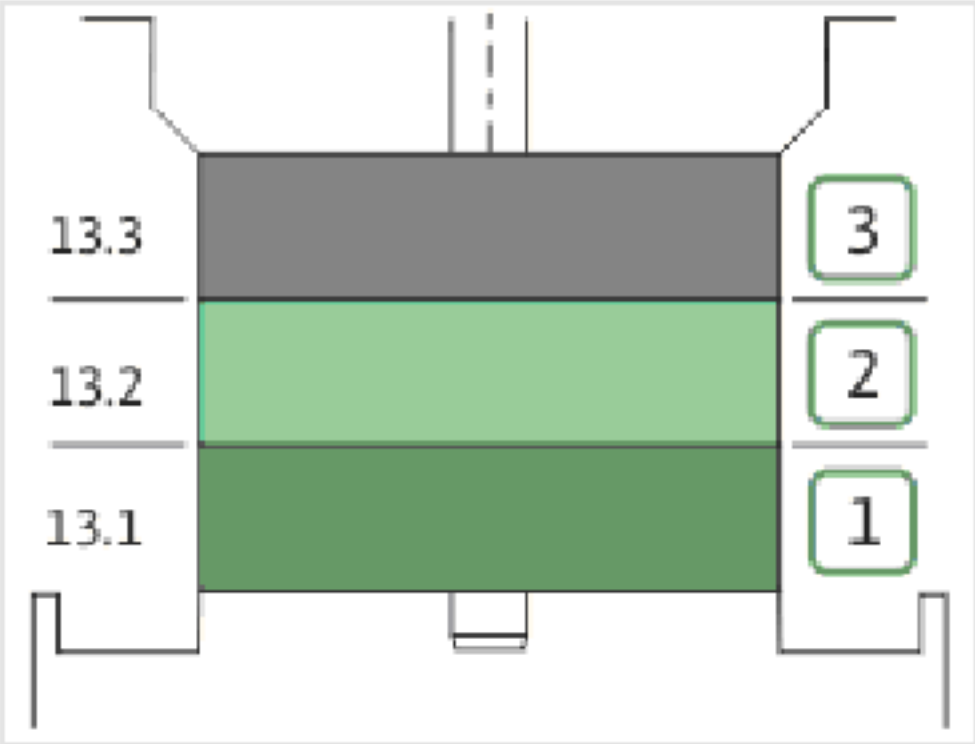
13.3
13.2
13.1
3
2
1

| Item | Article no. | Description | Quantity |
|---|---|---|---|
| 13.1 | 4178570 | STAGE HELIX 4 1.4301 KIT | 1 |
| | | > MACH.STG-CASING-WOGV-WNR-M+2-4-304 | 1 |
| | | > IMPELLER-M+4-304 | 1 |
| 13.2 | 4178569 | STAGE BEARING HELIX 4 1.4301 KIT | 1 |
| | | > MACH.BEARING-STG-CASING-WNR-M+4-304 | 1 |
| | | > IMPELLER-M+4-304 | 1 |
| | | > SHAFT SLEEVE SPACER Ø15,35x10,305-304 | 1 |
| | | > SHAFT-SLEEVE-D12xD16x14-CW | 1 |
| 13.3 | 4178574 | INTER STAGE HELIX4 1.4301< 15 stages KIT | 1 |
| | | > MACH.STD-STG-CASING-WGV+NR-M+4-304 | 1 |
| | | > IMPELLER-M+4-304 | 1 |
| | | > IMPELLER SPACER Ø12,05X14,85-L24,285-304 | 1 |

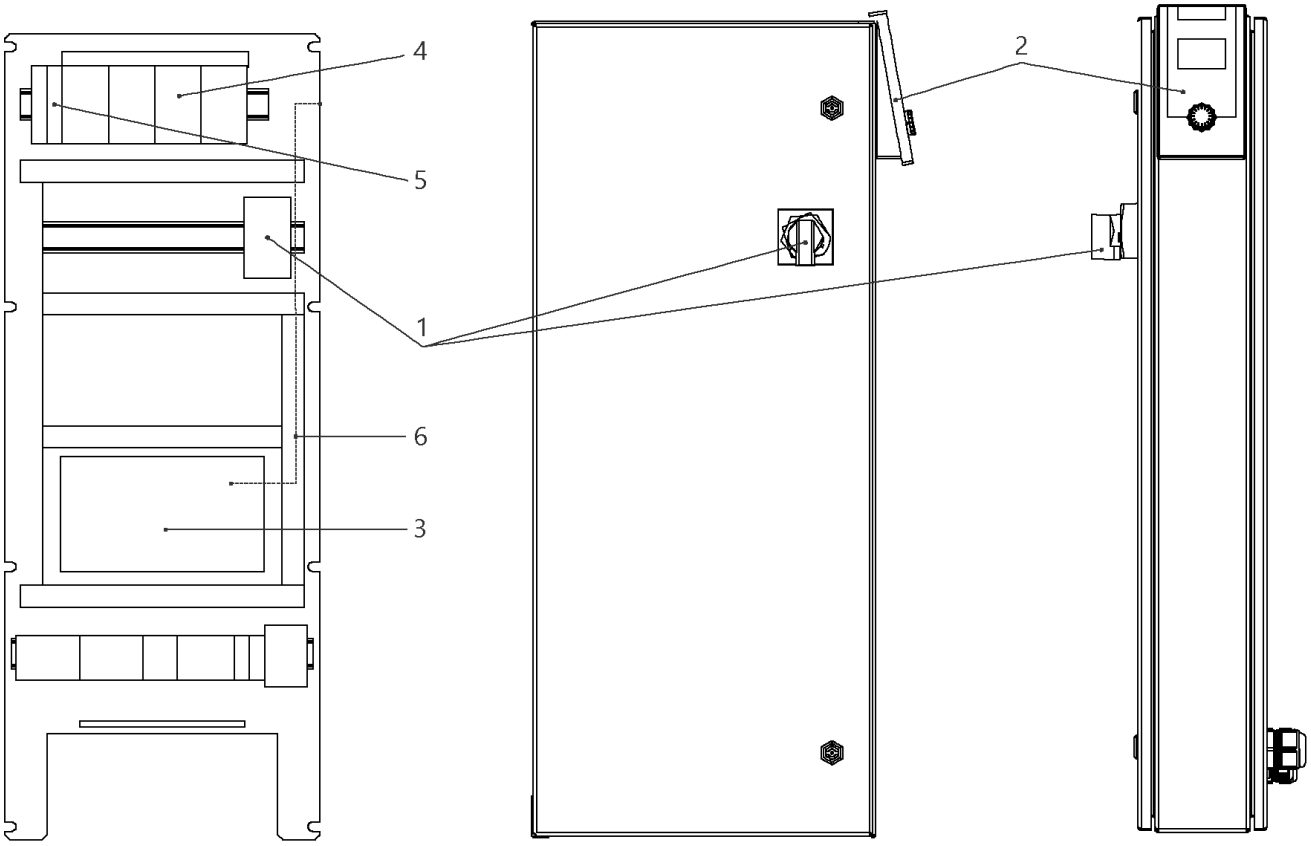
4
5
1
6
3
2

## W-CTRL-SCE-B-3x0,55-1,5KW-T4-FM-ND1

| Item | Article no. | Description | Quantity |
|---|---|---|---|
| 1 | 2104470 | MAIN SWITCH OT40F3 L250 KIT | 1 |
| 2 | 4184784 | CONTROL PANEL HMI SC KIT | 1 |
| 2 | 4185259 | ASSEMBLY DISPLAY SC PKG VP. | 1 |
| 3 | 4185257 | ASSEMBLY CPU SCe Booster VP. | 1 |
| 4 | 2051217 | AUTOM.CIRCUIT BREAKER S203 B16 TO7,5kW | 1 |
| 5 | 2046288 | CIRCUIT BREAKER S201 B16 | 1 |
| 6 | 4197081 | CABLE RJ45 CAT6 0,5M RED SC-PANEL VP. | 1 |

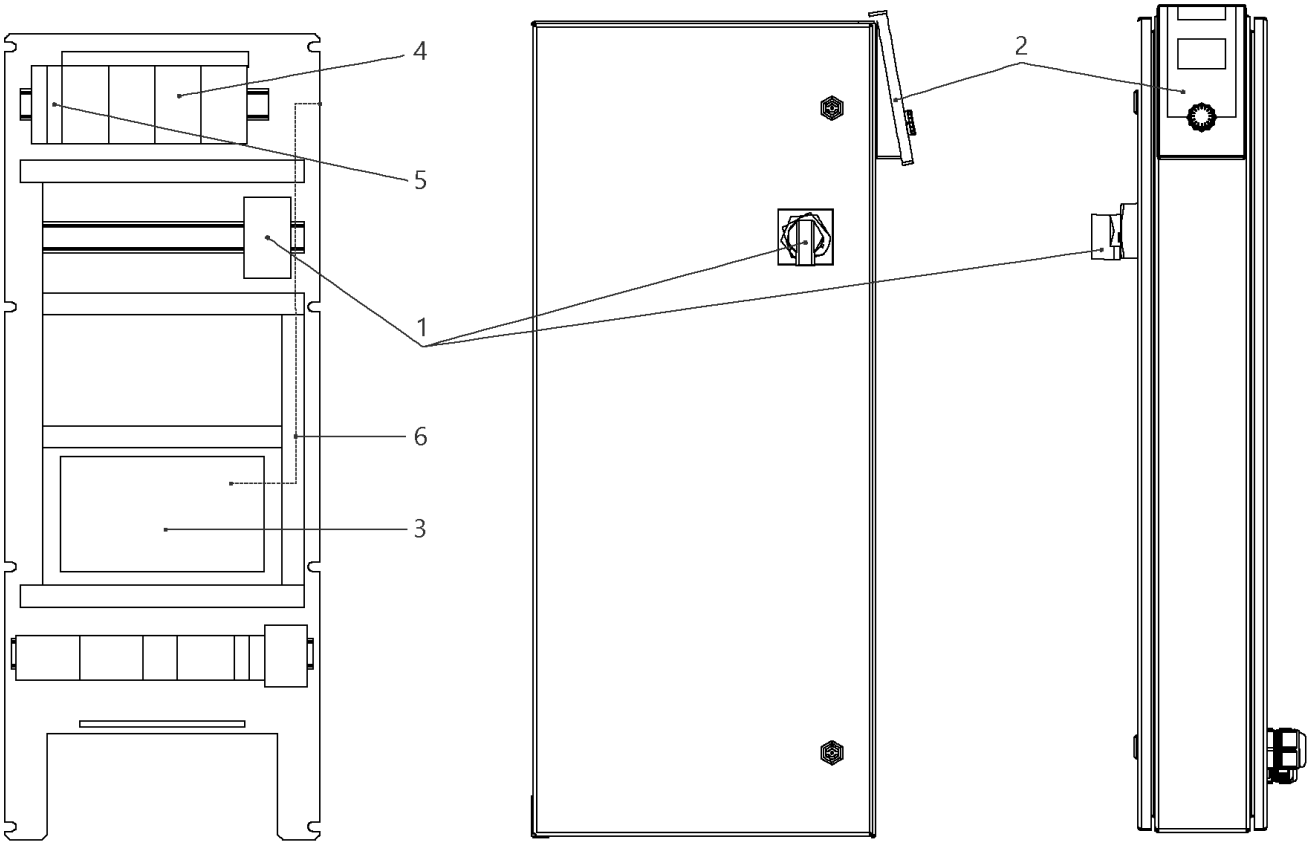
4
5
1
6
3
2

## W-CTRL-SCE-B-3x10A-T34-FM-ND1-AVC-PKG (2541914)

| Item | Article no. | Description | Quantity |
|---|---|---|---|
| 1 | 2104473 | MAIN SWITCH OT63F3 L105 KIT | 1 |
| Note: TO / BIS / JUSQU'AU 30/06/2015 | | | |
| 1 | 2104470 | MAIN SWITCH OT40F3 L250 KIT | 1 |
| Note: FROM / AB / À PARTIR DU 01/07/2015 | | | |
| 2 | 4184784 | CONTROL PANEL HMI SC KIT | 1 |
| 2 | 4185259 | ASSEMBLY DISPLAY SC PKG VP. | 1 |
| Note: DISPLAY ALONE / PLATINE SEULE | | | |
| 3 | 4185257 | ASSEMBLY CPU SCe Booster VP. | 1 |
| 4 | 2119861 | AUTOMATIC CIRCUIT BREAKER S203 B13 3POL. | 1 |
| 5 | 2046288 | CIRCUIT BREAKER S201 B16 | 1 |
| 6 | 4197081 | CABLE RJ45 CAT6 0,5M RED SC-PANEL VP. | 1 |

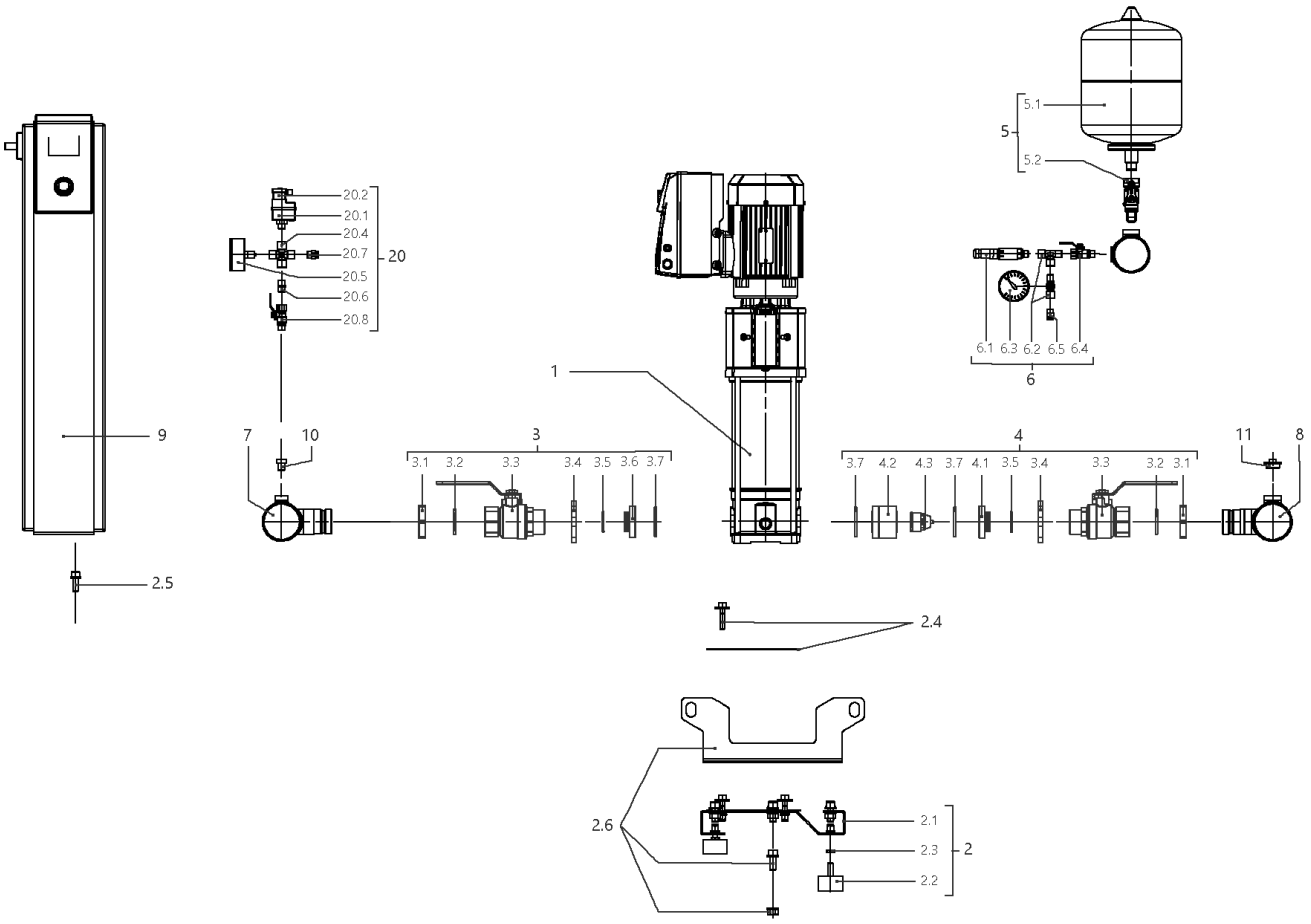
5.1
5
5.2
20.2
20.1
20.4
20.7
20
20.5
20.6
20.8
6.1 6.3 6.2 6.5 6.4
6
1
9
7
10
3
3.1 3.2 3.3 3.4 3.5 3.6 3.7
4
3.7 4.2 4.3 3.7 4.1 3.5 3.4 3.3 3.2 3.1
11
8
2.5
2.4
2.6
2.1
2.3
2
2.2

## SiBoost Smart 3HELIX VE404 (2537359)

| Item | Article no. | Description | Quantity |
|---|---|---|---|
| 1 | | HELIX VE404-1/16/E/S | 1 |
| Note: TO / BIS / JUSQU'AU 31/03/2016 | | | |
| 1 | 4201569 | HELIX VE404-1/16/E/S | 1 |
| Note: FROM / AB / À PARTIR DU 01/04/2016 | | | |
| 2 | 4200137 | BASE PLATE DE3 1150x300 M10 KIT | 1 |
| 2.1 | | > BASEPLATE_3x4/6/10V_E300_1150x300BOX_150 | 1 |
| 2.2 | 2028654 | > VIBRATION DAMPER D.50X30 M10X28 | 1 |
| 2.3 | 2028281 | > NUT M10 DIN936 (ISO4035) 17H VZ | 1 |
| 2.4 | 4199875 | > HOLDER PUMP Siboost Helix V2/4 KIT | 1 |
| 2.5 | 4197084 | > HOLDER SWITCHBOX WILO Smart Control KIT | 1 |
| 2.6 | 4197085 | > LIFTING Siboost HELIX SC KIT | 1 |
| 3 | 4199876 | SUCTION SIDE Siboost Helix V2/4/6 KIT | 1 |
| 3.1 | 2032610 | > NUT G11/4 MS VP. | 1 |
| 3.2 | 2032611 | > O-RING ID.36,09X3,53N DIN3771 E7502 | 1 |
| 3.3 | 2507646 | > BALL VALVE G11/4"M-F-W.HANDLE 1/4-TURN | 1 |
| 3.4 | 2032613 | > SCREWED FLANGE G1 1/4" LK-75 ST37VZ | 1 |
| 3.5 | 2032614 | > O-RING ID.29,82X2,62N DIN3771 E7502 | 1 |
| 3.6 | 2032615 | > SPACER F.I/A KUH.DN32 CUZN | 1 |
| 3.7 | 2032616 | > O-RING ID.44X3,53N DIN3771 E7502 | 1 |
| 4 | 4199877 | DELIVERY SIDE Siboost Helix V2/4/6 KIT | 1 |
| 3.1 | 2032610 | > NUT G11/4 MS VP. | 1 |
| 3.2 | 2032611 | > O-RING ID.36,09X3,53N DIN3771 E7502 | 1 |
| 3.3 | 2507646 | > BALL VALVE G11/4"M-F-W.HANDLE 1/4-TURN | 1 |
| 3.4 | 2032613 | > SCREWED FLANGE G1 1/4" LK-75 ST37VZ | 1 |
| 3.5 | 2032614 | > O-RING ID.29,82X2,62N DIN3771 E7502 | 1 |
| 4.1 | 2058116 | > SPACER F.I/A KUH.DN32 CUZN | 1 |
| 3.7 | 2032616 | > O-RING ID.44X3,53N DIN3771 E7502 | 1 |
| 4.2 | 2058115 | > HOUSING RFV(RV-IN) DN32 SGS/DRS | 1 |
| 4.3 | 2027870 | > NON-RETURN-DEVICE INSERT DN32(MTR) | 1 |
| 5 | 2032642 | DIAPHREM TANK 8L/PN16 DIN4807/T5 KIT | 1 |
| 5.1 | 2045914 | > DIAPHREM TANK 8L TYP-DD 16BAR | 1 |
| 5.2 | 2027853 | > FLOW FITTING G3/4 FOR DIAPHRAGM VES. | 1 |
| 6 | 4197076 | PRESSURE SENSOR/ GAUGE 0-16BAR KIT | 1 |
| 6.1 | 2085909 | > PRESS.SENSOR 1/4" 0-16BAR 4-20MA VP. | 1 |

| Item | Article no. | Description | Quantity |
|---|---|---|---|
| 6.2 | 4197077 | > T-PIECE 1/4" VP. | 1 |
| 6.3 | 2028692 | > PRESSURE GAUGE NG63-PN16-G1/4 | 1 |
| 6.4 | 2028291 | > BALL TAP R1/4" PN42 GIACOMINI R254DL | 1 |
| 6.5 | 2028691 | > BLOWGUN 1/4" MS 30BAR VP. | 1 |
| 7 | 4200138 | PIPE DE3 2''-3x11/4"+2x1/4x900 VP. | 1 |
| 8 | 4200139 | PIPE DE3 2''-3x11/4"+2x1/4+1x3/4x900 VP. | 1 |
| 9 | | W-CTRL-SCE-B-3x0,55-1,5KW-T4-FM-ND1 | 1 |
| Note: TO / BIS / JUSQU'AU 18/05/2014 | | | |
| 9 | 2541914 | W-CTRL-SCE-B-3x10A-T34-FM-ND1-AVC-PKG | 1 |
| Note: FROM / AB / À PARTIR DU 19/05/2014 | | | |
| 10 | 4197079 | PLUG G1/4"x10 AISI304 KIT | 1 |
| 11 | 2032654 | PLUG R3/4" MS VIEGA 1751 | 1 |
| 20 | 2521150 | ASSEMBLY WMS. DE-EB. +VP | 1 |
| 20.1 | 2028652 | > PRESSURE SWITCH PS3-ASR 1/(1,3) VP. | 1 |
| 20.2 | 2130983 | > PLUG PS3-415 WITH KABEL 1,5M 2NO VP. | 1 |
| 20.4 | 2028290 | > CROSSPIECE R1/4" MS-NICKEL | 1 |
| 20.5 | 2028687 | > PRESSURE GAUGE NG63 R1/4" HI.0-6BAR | 1 |
| 20.6 | 2054268 | > DUAL NIPPLE G1/4" x G1/4" MS VP. | 1 |
| 20.7 | 2028691 | > BLOWGUN 1/4" MS 30BAR VP. | 1 |
| 20.8 | 2028291 | > BALL TAP R1/4" PN42 GIACOMINI R254DL | 1 |

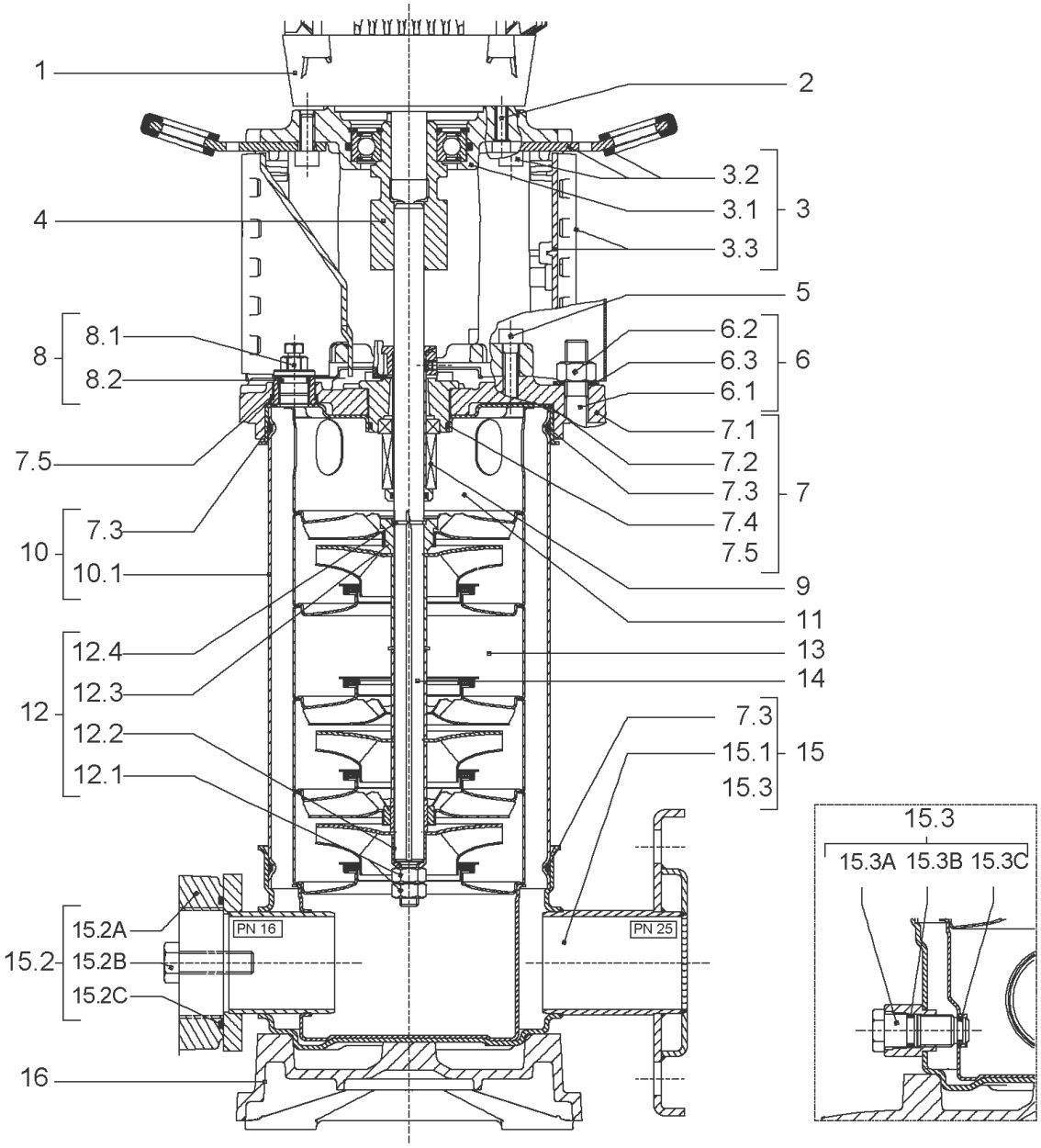
1
2
3.2
3.1
3
3.3
4
5
8.1
8
8.2
6.2
6.3
6
6.1
7.1
7.5
7.2
7.3
7
7.4
7.3
10
7.5
10.1
9
11
12.4
13
12.3
14
12
12.2
7.3
15.1
15
12.1
15.3
15.3
15.3A 15.3B 15.3C
15.2A
PN 16
PN 25
15.2
15.2B
15.2C
16

| Item | Article no. | Description | Quantity |
|---|---|---|---|
| 1 | | DRIVE HELIX-VE404-IE2-WE KIT | 1 |
| Note: MOTOR BRAND WILO ELEC | | | |
| 1 | | DRIVE HELIX-VE404-IE4-WE KIT | 1 |
| Note: MOTOR BRAND WILO ELEC | | | |
| 2 | 4159702 | SCREW M6X30 (4 PIECES) | 1 |
| 3 | 4172790 | EQUIPED LANTERN NEXIS FT 100 KIT | 1 |
| 3.1 | | > M+5_6_LANTERN_ONE-PIECE_FT100_CATA | 1 |
| 3.2 | 2127604 | > EYELET CPL.FT HELIX(2 PIECES) | 1 |
| 3.3 | 4159692 | > COUPLING PROTECTOR FT HELIX KIT | 1 |
| 4 | 4178578 | COUPLING D.12XD.19 FT100 KIT | 1 |
| 5 | 4159707 | SCREW M8X30 (4 PIECES) | 1 |
| 6 | 2018368 | STUD BOLT M12X289 KIT | 1 |
| 6.1 | | > TIE BOLT M12-289x18x30-1.4057 | 1 |
| 6.2 | 2094647 | > NUT M12 M12 ISO4032 VP. | 1 |
| 6.3 | 2123557 | > WASHER CS-12.4-24-1.6-NFE25 (4 PIECES) | 1 |
| 7 | 4210143 | STATIONARY RING HOLDER HELIX 6" EPDM | 1 |
| 7.2 | 2127607 | > STATIONARY RING HOLDER 6" HELIX 1.4301 V | 1 |
| 7.3 | 4176513 | > O-RING FOR PUMP JACKET VP. | 1 |
| 7.4 | 2127603 | > O-RING ID.37,6x2,4 EPDM VP. | 1 |
| 7.5 | 2127602 | > O-RING ID.21,35x2 EPDM VP. | 1 |
| 8 | 4159686 | FILING/PURGING PLUG HELIX EPDM KIT | 1 |
| 9 | 4178564 | SEAL-KIT-HELIX2-4 O/E KIT | 1 |
| 10 | 2127574 | HOUSING PIPE D.152x160 1.4301 KIT | 1 |
| 7.3 | 4176513 | > O-RING FOR PUMP JACKET VP. | 1 |
| 10.1 | | > HOUSING-PIPE Ø152-M+1601/02-304 | 1 |
| 11 | 4178566 | CENTERING STAGE-RETURN HELIX4 1.4307 VP | 1 |
| 12 | 4178568 | SHAFT EQUIPMENT HELIX V2/V4 KIT | 1 |
| 12.1 | | > NUT-H-M8-STAINLESS-STEEL A4-70 | 2 |
| 12.2 | | > SHAFT END WASHER Ø8/Ø12 316L | 1 |
| 12.3 | | > STOP COLLAR OF IMPELLER M+2/4 SINGLEBLOC | 1 |
| 12.4 | | > STOP-RUSH-1/2-D12xd2-M+316 | 2 |
| 13 | | HYDRAULIC HELIX V 404 1.4307 | 1 |
| 14 | 4178576 | SHAFT D.12X283 1.4301 VP. | 1 |
| 15 | 4174079 | PUMP HOUSING HELIX DN32 PN16 1.4301 KIT | 1 |

| Item | Article no. | Description | Quantity |
|---|---|---|---|
| 7.3 | 4176513 | > O-RING FOR PUMP JACKET VP. | 1 |
| 15.1 | | > BLASTING PPE HOUSING V-PN16-DN32-5"-304 | 1 |
| 15.2 | 4217889 | > COUNTER FLANGE-G1"-PN16-GJL KIT | 1 |
| 15.3 | 4171321 | > PRIMING/DRAIN PLUG EPDM HELIX KIT | 1 |
| 16 | 4177964 | BASEPLATE HELIX V2/4/6 PN16 VP. | 1 |

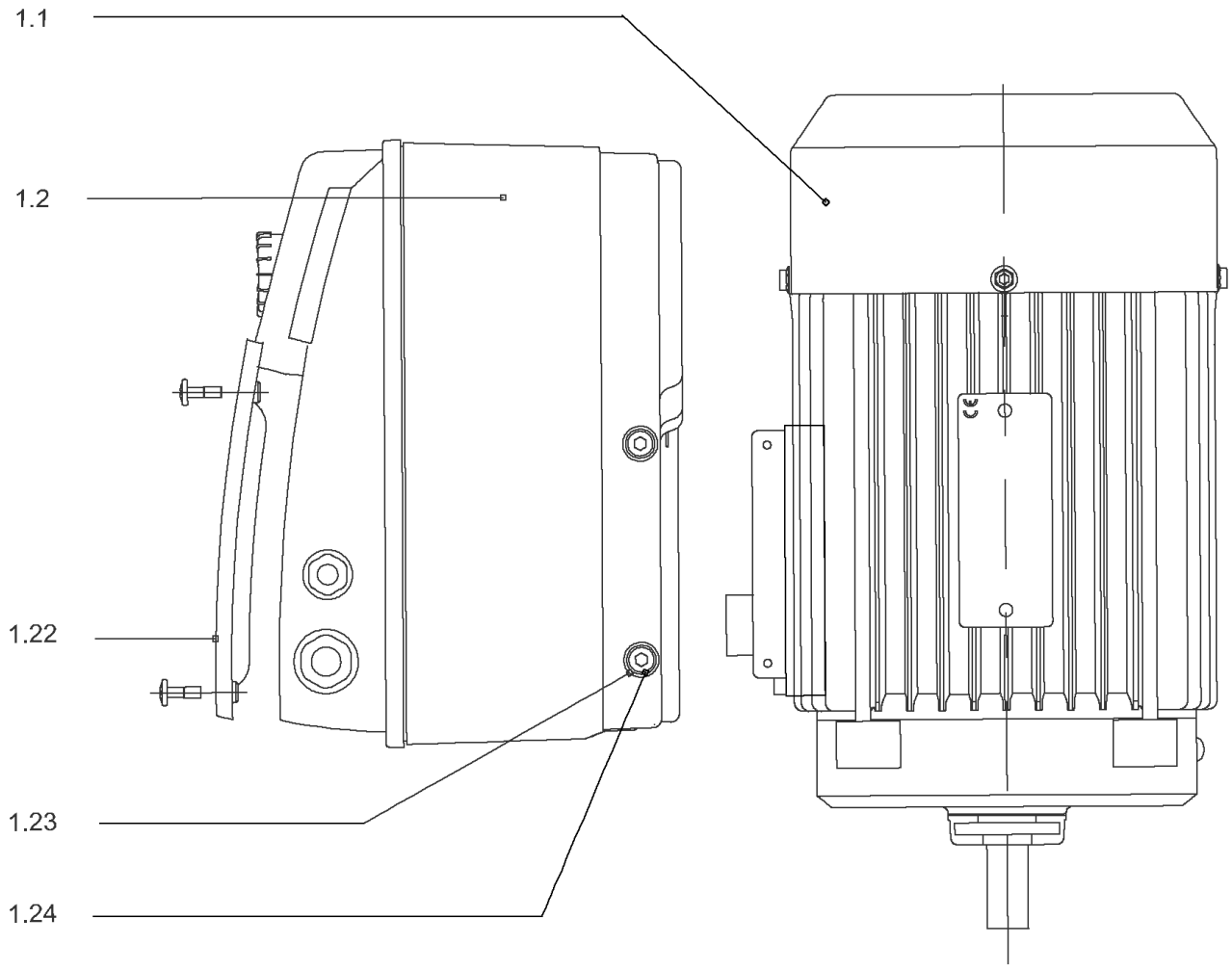
1.1
1.2
1.22
1.23
1.24

## DRIVE HELIX-VE404-IE2-WE KIT

| Item | Article no. | Description | Quantity |
|---|---|---|---|
| 1.1 | | MOTOR 0,75/2/80 3~ 380V 60HZ IE2 WE VP. | 1 |
| Note: no longer available/nicht mehrlieferbar/n'est plus disponible | | | |
| | | SPARE PARTS MOTOR:ON REQUEST | 1 |
| 1.2 | 4190192 | MODULE HELIX-VE404-IE2-WE KIT | 1 |
| 1.22 | 2054372 | > MODULE COVER TL1,TL2+GASKET KIT | 1 |
| 1.23 | 4215716 | > SCREW M5X16 DIN912 8.8 A2A (4pieces) VP. | 1 |
| 1.24 | 2057978 | > RONDELLE A5,3 DIN6797 FST ZN (4 PIECES) | 1 |

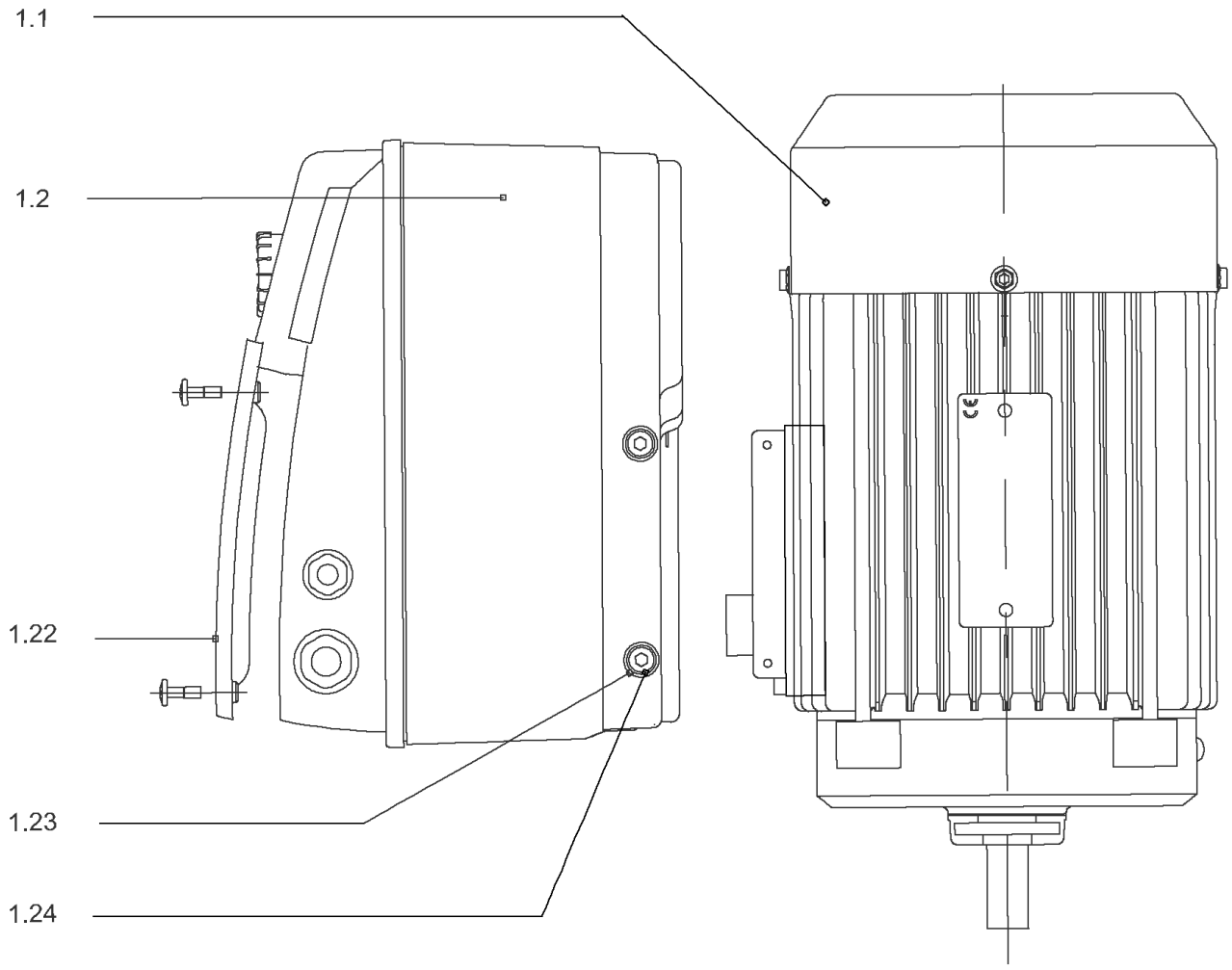
1.1
1.2
1.22
1.23
1.24

## DRIVE HELIX-VE404-IE4-WE KIT

| Item | Article no. | Description | Quantity |
|---|---|---|---|
| 1.1 | 4207914 | MOTOR 0.75/2/80 3~ 380V 60HZ IE4 WE VP. | 1 |
| | | SPARE PARTS MOTOR:ON REQUEST | 1 |
| 1.2 | 4209322 | MODULE HELIX-VE404-IE4-WE KIT | 1 |
| 1.22 | 2054372 | > MODULE COVER TL1,TL2+GASKET KIT | 1 |
| 1.23 | 4215716 | > SCREW M5X16 DIN912 8.8 A2A (4pieces) VP. | 1 |
| 1.24 | 2057978 | > RONDELLE A5,3 DIN6797 FST ZN (4 PIECES) | 1 |

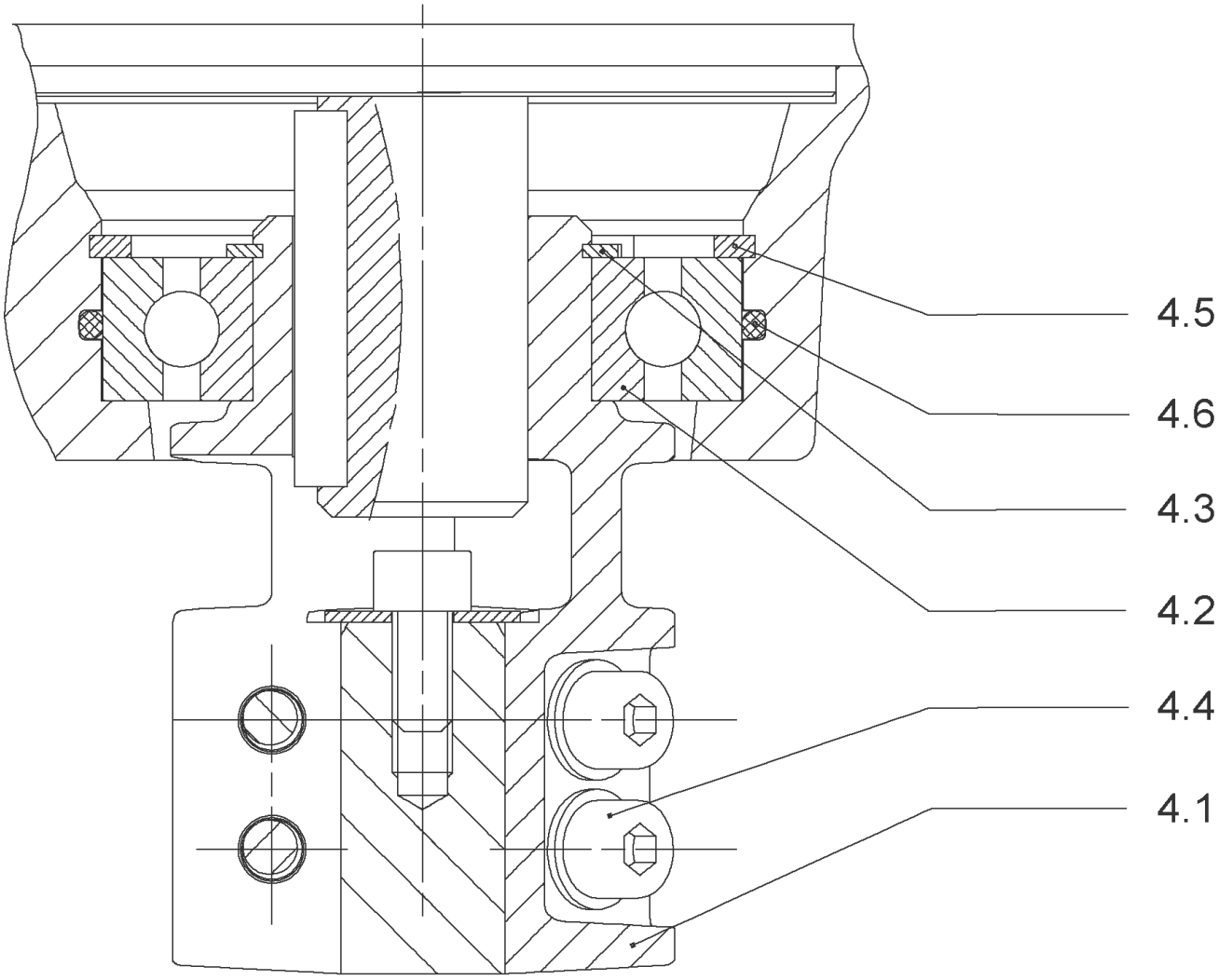
4.5
4.6
4.3
4.2
4.4
4.1

## COUPLING D.12XD.19 FT100 KIT (4178578)

| Item | Article no. | Description | Quantity |
|---|---|---|---|
| 4.1 | | COUPLING-M+ Ø12XØ19-FT100-MACHINED | 1 |
| 4.3 | 4234249 | CIRCLIP-FOR-SHAFT-D30x1.5 VP. | 1 |
| 4.2 | 2130977 | BALL BEARING 6206/ZZ-C3(HT)VP. | 1 |
| 4.4 | 4212716 | SCREW M6X20 KIT (4PIECES) | 1 |
| 4.5 | 4234250 | CIRCLIP-D62x2 VP. | 1 |
| 4.6 | 4234245 | O-RING 63X3 VP. | 1 |
| | | CONTACT-WASHER-6ETR-6,1x12,2x1,8-STEEL | 4 |

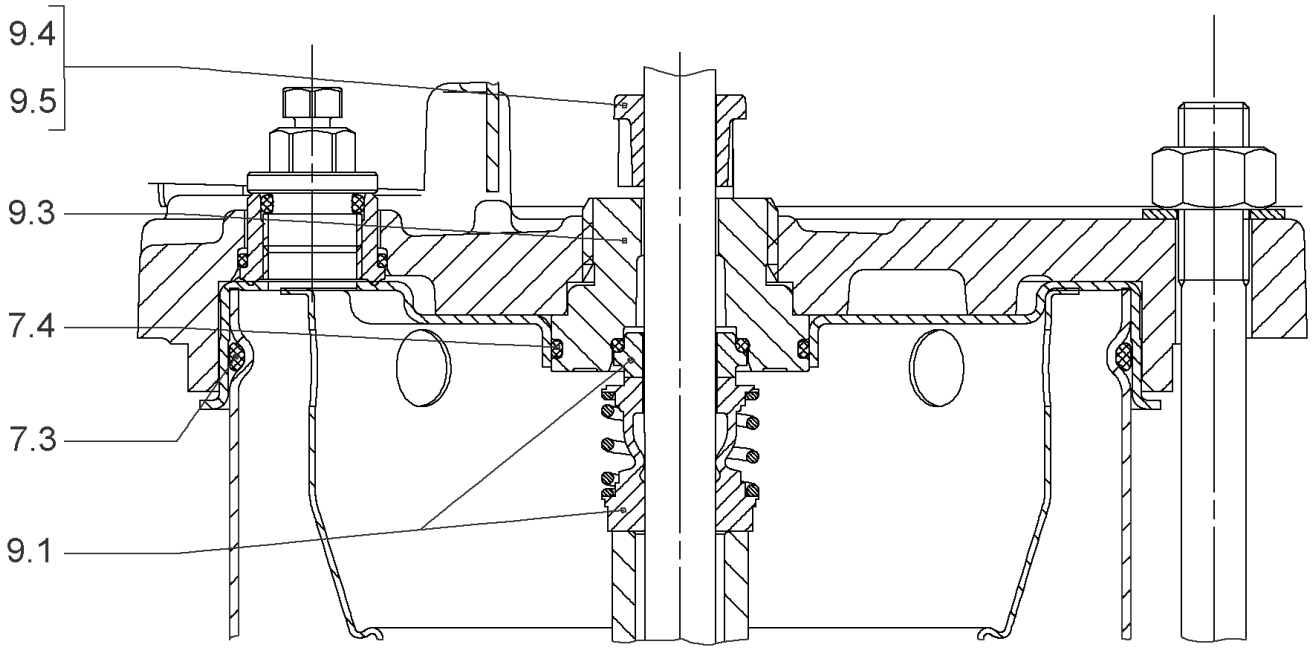
9.4
9.5
9.3
7.4
7.3
9.1

## SEAL-KIT-HELIX2-4 O/E KIT (4178564)

| Item | Article no. | Description | Quantity |
|---|---|---|---|
| 7.3 | 4176513 | O-RING FOR PUMP JACKET VP. | 1 |
| 7.4 | 2127603 | O-RING ID.37,6x2,4 EPDM VP. | 1 |
| 9.1 | 4178563 | M.SEAL.HELIX2-4 O/E VP. | 1 |
| 9.3 | 4178561 | RING HOLDER Ø22 1.4301 VP. | 1 |
| 9.5 | 4178562 | DRIVE RING D.22/12.2X10 MACH.VP. | 1 |
| 9.4 | 4176520 | SCREW CH M5x5 A4-70 ( 3PIECES ) | 1 |

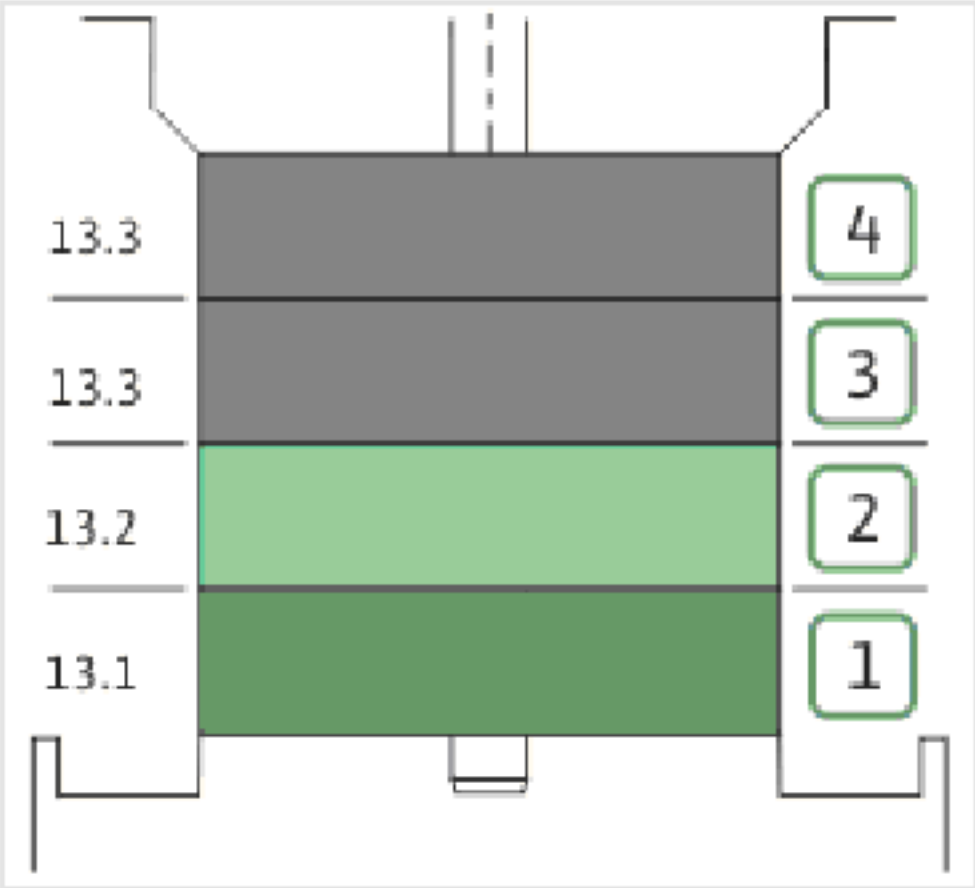
13.3
13.3
13.2
13.1
4
3
2
1

| Item | Article no. | Description | Quantity |
|---|---|---|---|
| 13.1 | 4178570 | STAGE HELIX 4 1.4301 KIT | 1 |
| | | > MACH.STG-CASING-WOGV-WNR-M+2-4-304 | 1 |
| | | > IMPELLER-M+4-304 | 1 |
| 13.2 | 4178569 | STAGE BEARING HELIX 4 1.4301 KIT | 1 |
| | | > MACH.BEARING-STG-CASING-WNR-M+4-304 | 1 |
| | | > IMPELLER-M+4-304 | 1 |
| | | > SHAFT SLEEVE SPACER Ø15,35x10,305-304 | 1 |
| | | > SHAFT-SLEEVE-D12xD16x14-CW | 1 |
| 13.3 | 4178574 | INTER STAGE HELIX4 1.4301< 15 stages KIT | 1 |
| | | > MACH.STD-STG-CASING-WGV+NR-M+4-304 | 1 |
| | | > IMPELLER-M+4-304 | 1 |
| | | > IMPELLER SPACER Ø12,05X14,85-L24,285-304 | 1 |

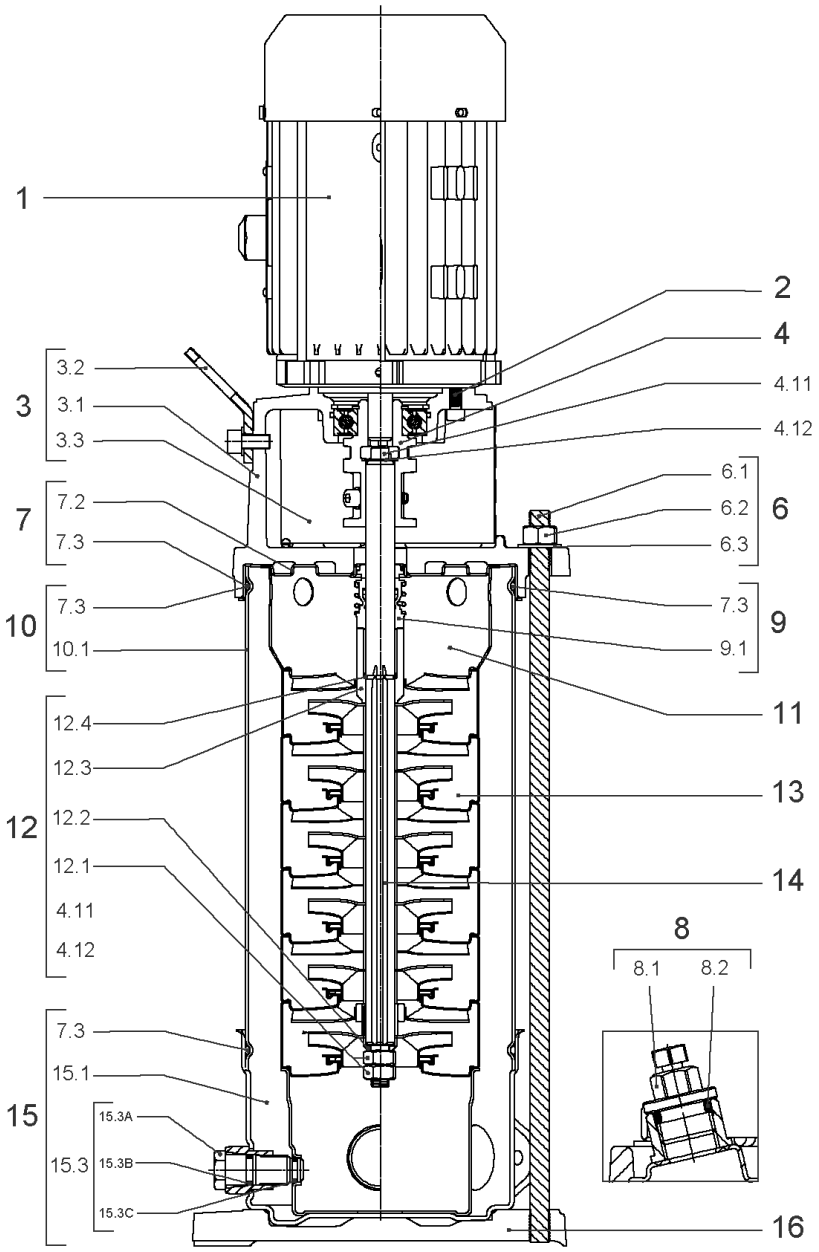
1
2
4
4.11
4.12
3
3.2
3.1
3.3
7
7.2
7.3
6
6.1
6.2
6.3
10
7.3
10.1
9
7.3
9.1
11
12
12.4
12.3
12.2
12.1
4.11
4.12
13
14
8
8.1
8.2
15
7.3
15.1
15.3
15.3A
15.3B
15.3C
16

## HELIX VE404-1/16/E/S (4201569)

| Item | Article no. | Description | Quantity |
|---|---|---|---|
| 1 | | DRIVE HELIX-VE404-IE4-WE KIT | 1 |
| Note: MOTOR BRAND WILO ELEC | | | |
| | | SPARE PARTS MOTOR:ON REQUEST | 1 |
| 2 | 4212716 | SCREW M6X20 KIT (4PIECES) | 1 |
| 3 | 4213752 | LANTERN FT100 HELIX KIT | 1 |
| 3.1 | | > LANT-MOT-VMI-ReDTC6"-FT100-MACHINED+CATA | 1 |
| 3.2 | 4184852 | > EYELET CPL.FT HELIX (2 PIECES) | 1 |
| 3.3 | 4213713 | > COUPLING PROTECTOR FT85/100 HELIX KIT | 1 |
| 4 | 4178578 | COUPLING D.12XD.19 FT100 KIT | 1 |
| 6 | 2018368 | STUD BOLT M12X289 KIT | 1 |
| 6.1 | | > TIE BOLT M12-289x18x30-1.4057 | 1 |
| 6.2 | 2094647 | > NUT M12 M12 ISO4032 VP. | 1 |
| 6.3 | 2123557 | > WASHER CS-12.4-24-1.6-NFE25 (4 PIECES) | 1 |
| 7 | 4212722 | STATIONARY RING HOLDER HELIX D23 ReDTC | 1 |
| 7.2 | 4212720 | > STATIONARY RING HOLDER HELIX D23 VP. | 1 |
| 7.3 | 4176513 | > O-RING FOR PUMP JACKET VP. | 1 |
| 8 | 4212724 | FILING/PURGING PLUG HELIX ReDTC KIT | 1 |
| 8.1 | | > FILLING PLUG MVI6"-304 | 1 |
| 8.2 | 4177800 | > O-RING EPDM PLUG HELIX VP. | 1 |
| 9 | 4212726 | MECH.SEAL HELIX V2/4 O/E ReDTC KIT | 1 |
| 9.1 | 4178563 | > M.SEAL.HELIX2-4 O/E VP. | 1 |
| 7.3 | 4176513 | > O-RING FOR PUMP JACKET VP. | 1 |
| 10 | 2127574 | HOUSING PIPE D.152x160 1.4301 KIT | 1 |
| 7.3 | 4176513 | > O-RING FOR PUMP JACKET VP. | 1 |
| 10.1 | | > HOUSING-PIPE Ø152-M+1601/02-304 | 1 |
| 11 | 4178566 | CENTERING STAGE-RETURN HELIX4 1.4307 VP | 1 |
| 12 | 4212729 | SHAFT EQUIPMENT HELIX V2/4 ReDTC KIT | 1 |
| 12.1 | | > NUT-H-M8-STAINLESS-STEEL A4-70 | 1 |
| 12.2 | | > SHAFT END WASHER Ø8/Ø12 316L | 1 |
| 12.3 | | > 1/2-SNAP-RING-2/4M3-316L | 1 |
| 12.4 | | > STOP-RUSH-1/2-D12xd2-M+316 | 1 |
| 4.11 | | > SCREW CHC-M6X14-8.8-ISO4762-GEOMET500A | 1 |
| 4.12 | | > WASHER D.24 L6U ZINK | 1 |
| 13 | | HYDRAULIC HELIX V 404 1.4307 | 1 |

| Item | Article no. | Description | Quantity |
|---|---|---|---|
| 14 | 4213744 | SHAFT D.12X231 HELIX 1.4057 VP. | 1 |
| 15 | 4174079 | PUMP HOUSING HELIX DN32 PN16 1.4301 KIT | 1 |
| 7.3 | 4176513 | > O-RING FOR PUMP JACKET VP. | 1 |
| 15.1 | | > BLASTING PPE HOUSING V-PN16-DN32-5"-304 | 1 |
| 15.2 | 4217889 | > COUNTER FLANGE-G1"-PN16-GJL KIT | 1 |
| 15.3 | 4171321 | > PRIMING/DRAIN PLUG EPDM HELIX KIT | 1 |
| 16 | 4177964 | BASEPLATE HELIX V2/4/6 PN16 VP. | 1 |

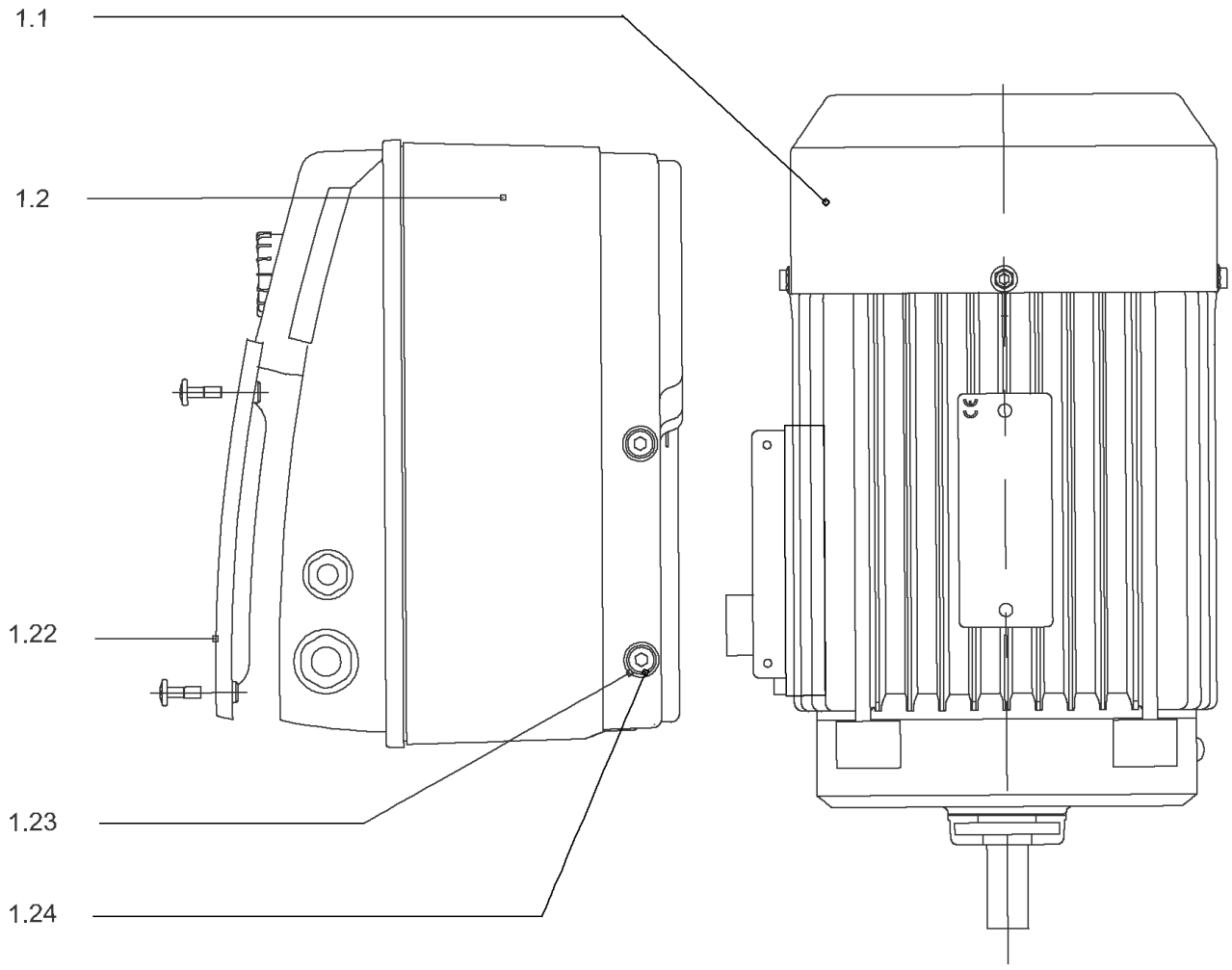
1.1
1.2
1.22
1.23
1.24

## DRIVE HELIX-VE404-IE4-WE KIT

| Item | Article no. | Description | Quantity |
|---|---|---|---|
| 1.1 | 4207914 | MOTOR 0.75/2/80 3~ 380V 60HZ IE4 WE VP. | 1 |
| | | SPARE PARTS MOTOR:ON REQUEST | 1 |
| 1.2 | 4209322 | MODULE HELIX-VE404-IE4-WE KIT | 1 |
| 1.22 | 2054372 | > MODULE COVER TL1,TL2+GASKET KIT | 1 |
| 1.23 | 4215716 | > SCREW M5X16 DIN912 8.8 A2A (4pieces) VP. | 1 |
| 1.24 | 2057978 | > RONDELLE A5,3 DIN6797 FST ZN (4 PIECES) | 1 |

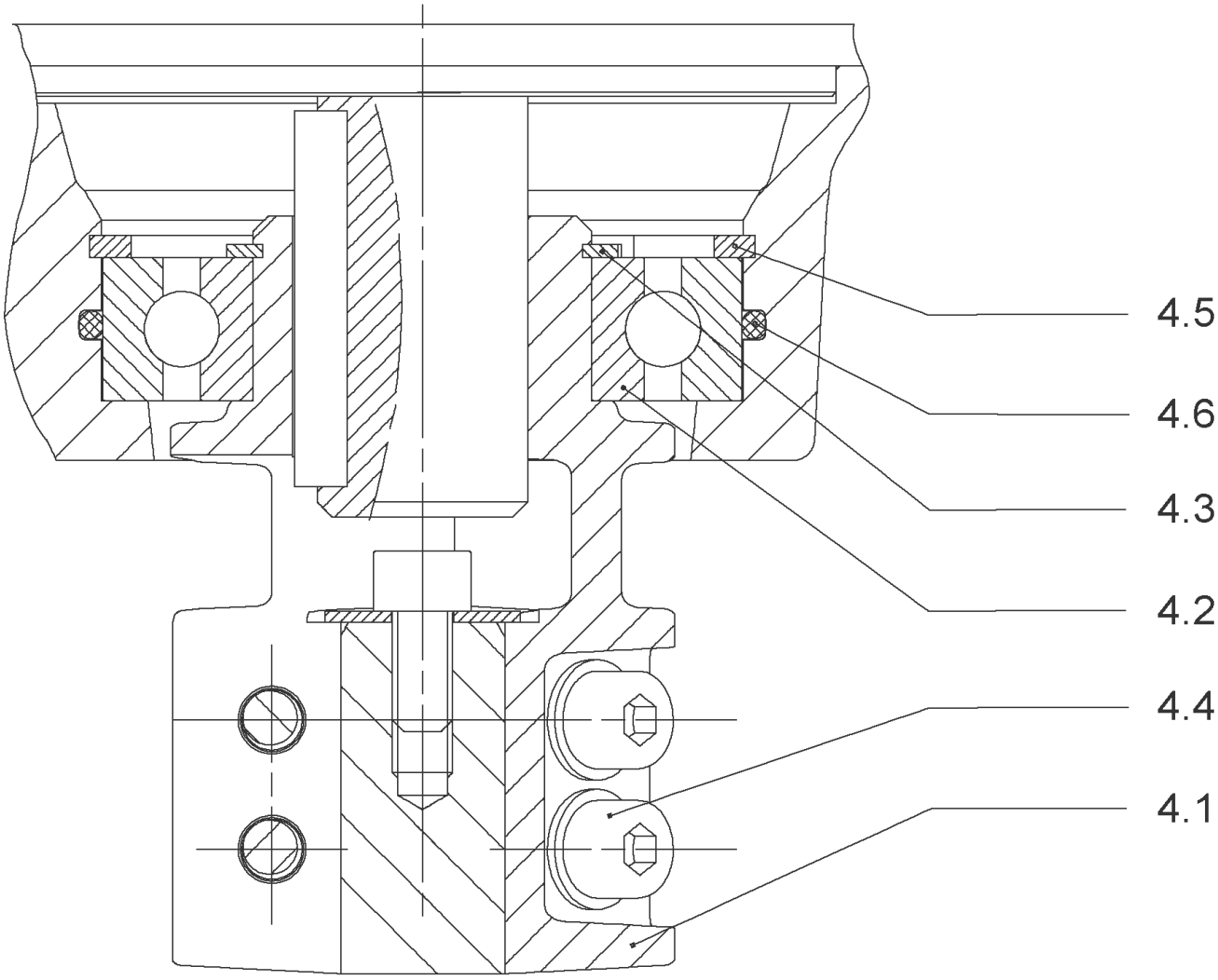
4.5
4.6
4.3
4.2
4.4
4.1

## COUPLING D.12XD.19 FT100 KIT (4178578)

| Item | Article no. | Description | Quantity |
|---|---|---|---|
| 4.1 | | COUPLING-M+ Ø12XØ19-FT100-MACHINED | 1 |
| 4.3 | 4234249 | CIRCLIP-FOR-SHAFT-D30x1.5 VP. | 1 |
| 4.2 | 2130977 | BALL BEARING 6206/ZZ-C3(HT)VP. | 1 |
| 4.4 | 4212716 | SCREW M6X20 KIT (4PIECES) | 1 |
| 4.5 | 4234250 | CIRCLIP-D62x2 VP. | 1 |
| 4.6 | 4234245 | O-RING 63X3 VP. | 1 |
| | | CONTACT-WASHER-6ETR-6,1x12,2x1,8-STEEL | 4 |

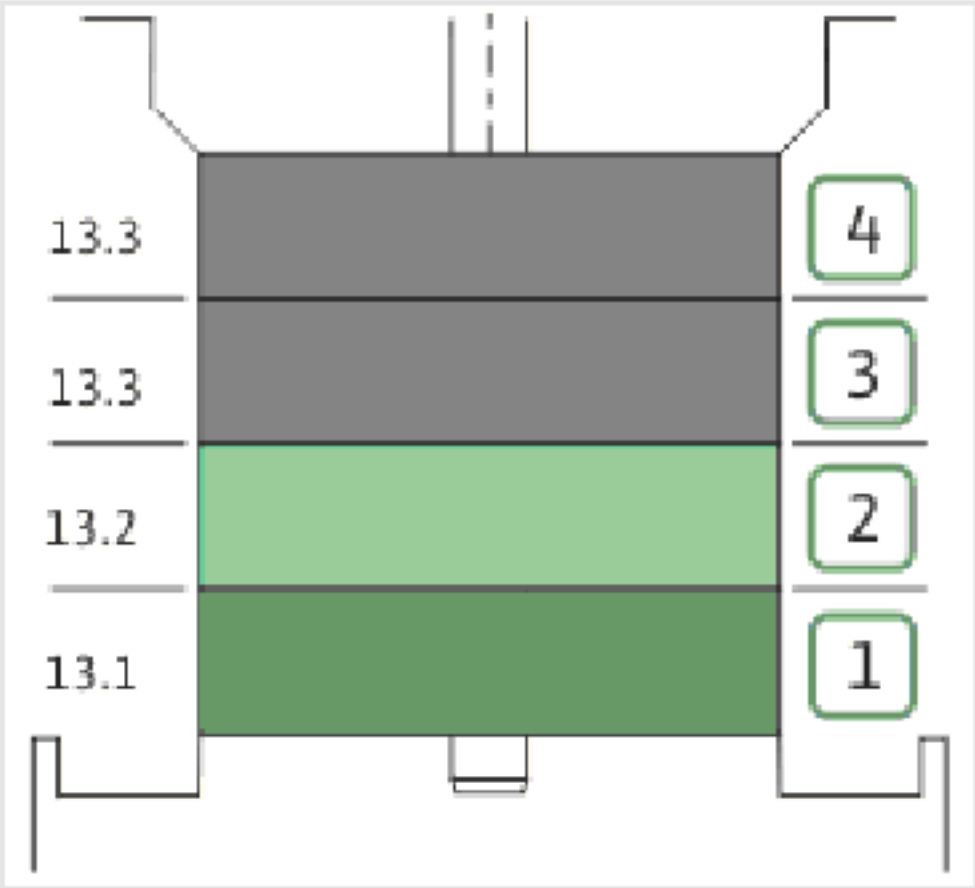
13.3
13.3
13.2
13.1
4
3
2
1

| Item | Article no. | Description | Quantity |
|---|---|---|---|
| 13.1 | 4178570 | STAGE HELIX 4 1.4301 KIT | 1 |
| | | > MACH.STG-CASING-WOGV-WNR-M+2-4-304 | 1 |
| | | > IMPELLER-M+4-304 | 1 |
| 13.2 | 4178569 | STAGE BEARING HELIX 4 1.4301 KIT | 1 |
| | | > MACH.BEARING-STG-CASING-WNR-M+4-304 | 1 |
| | | > IMPELLER-M+4-304 | 1 |
| | | > SHAFT SLEEVE SPACER Ø15,35x10,305-304 | 1 |
| | | > SHAFT-SLEEVE-D12xD16x14-CW | 1 |
| 13.3 | 4178574 | INTER STAGE HELIX4 1.4301< 15 stages KIT | 1 |
| | | > MACH.STD-STG-CASING-WGV+NR-M+4-304 | 1 |
| | | > IMPELLER-M+4-304 | 1 |
| | | > IMPELLER SPACER Ø12,05X14,85-L24,285-304 | 1 |

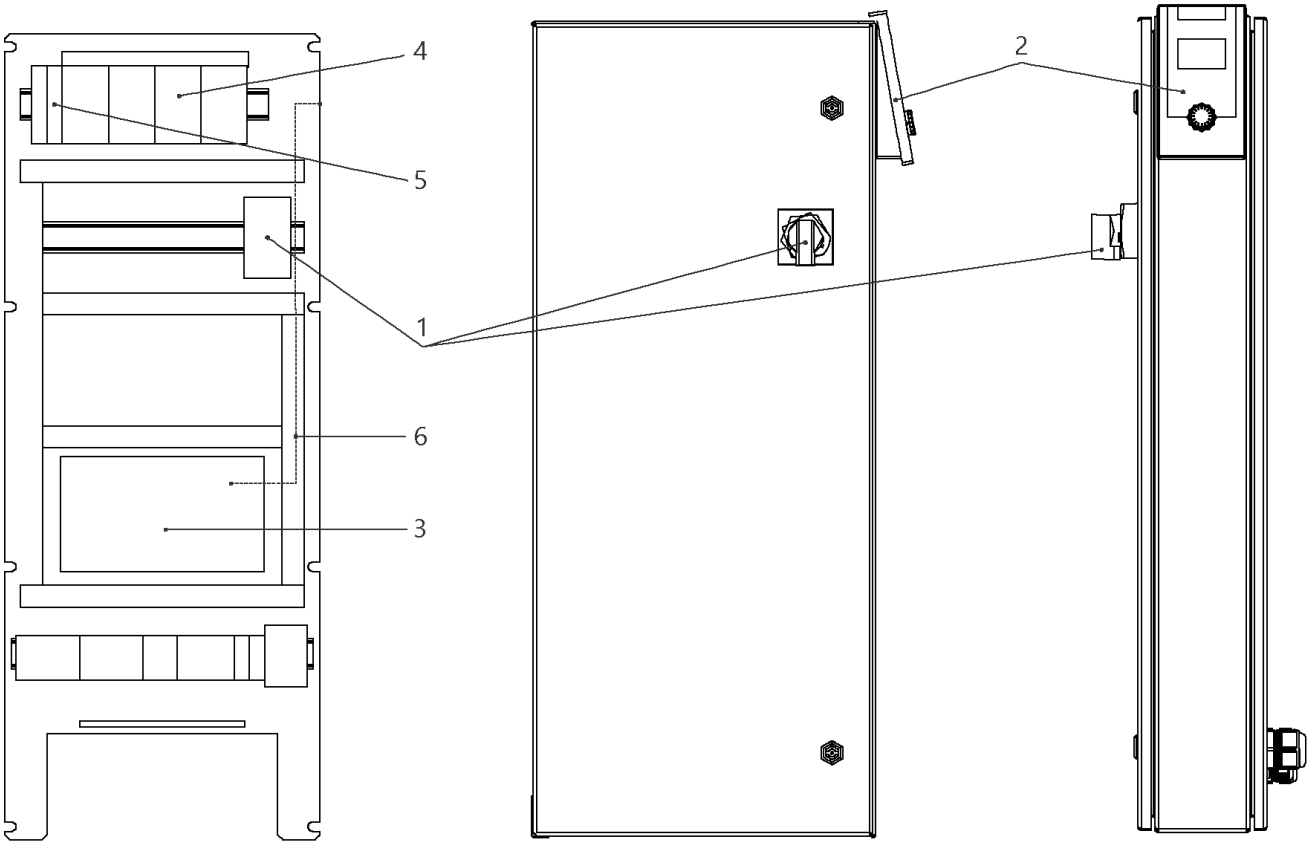
4
5
1
6
3
2

## W-CTRL-SCE-B-3x0,55-1,5KW-T4-FM-ND1

| Item | Article no. | Description | Quantity |
|---|---|---|---|
| 1 | 2104470 | MAIN SWITCH OT40F3 L250 KIT | 1 |
| 2 | 4184784 | CONTROL PANEL HMI SC KIT | 1 |
| 2 | 4185259 | ASSEMBLY DISPLAY SC PKG VP. | 1 |
| 3 | 4185257 | ASSEMBLY CPU SCe Booster VP. | 1 |
| 4 | 2051217 | AUTOM.CIRCUIT BREAKER S203 B16 TO7,5kW | 1 |
| 5 | 2046288 | CIRCUIT BREAKER S201 B16 | 1 |
| 6 | 4197081 | CABLE RJ45 CAT6 0,5M RED SC-PANEL VP. | 1 |

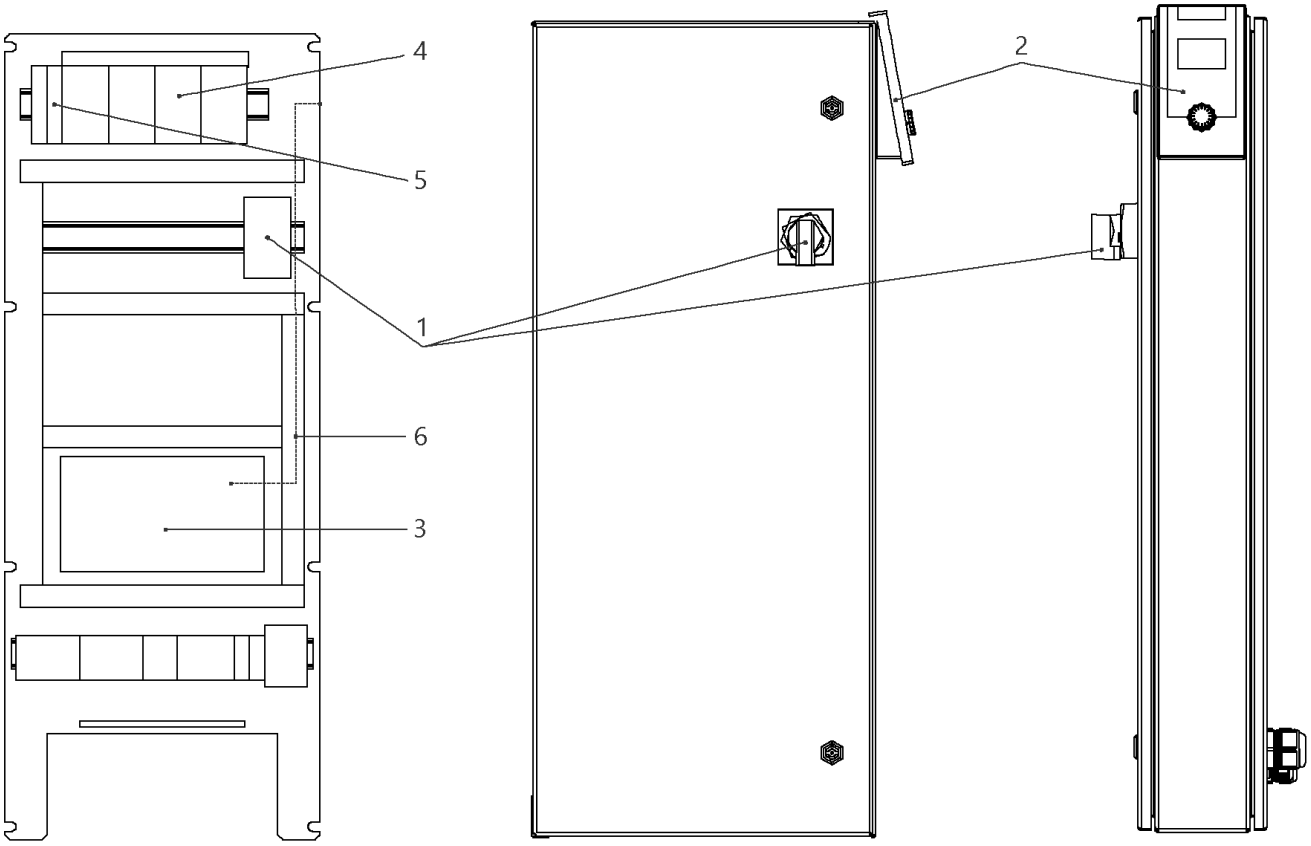
4
5
1
6
3
2

## W-CTRL-SCE-B-3x10A-T34-FM-ND1-AVC-PKG (2541914)

| Item | Article no. | Description | Quantity |
|---|---|---|---|
| 1 | 2104473 | MAIN SWITCH OT63F3 L105 KIT | 1 |
| Note: TO / BIS / JUSQU'AU 30/06/2015 | | | |
| 1 | 2104470 | MAIN SWITCH OT40F3 L250 KIT | 1 |
| Note: FROM / AB / À PARTIR DU 01/07/2015 | | | |
| 2 | 4184784 | CONTROL PANEL HMI SC KIT | 1 |
| 2 | 4185259 | ASSEMBLY DISPLAY SC PKG VP. | 1 |
| Note: DISPLAY ALONE / PLATINE SEULE | | | |
| 3 | 4185257 | ASSEMBLY CPU SCe Booster VP. | 1 |
| 4 | 2119861 | AUTOMATIC CIRCUIT BREAKER S203 B13 3POL. | 1 |
| 5 | 2046288 | CIRCUIT BREAKER S201 B16 | 1 |
| 6 | 4197081 | CABLE RJ45 CAT6 0,5M RED SC-PANEL VP. | 1 |

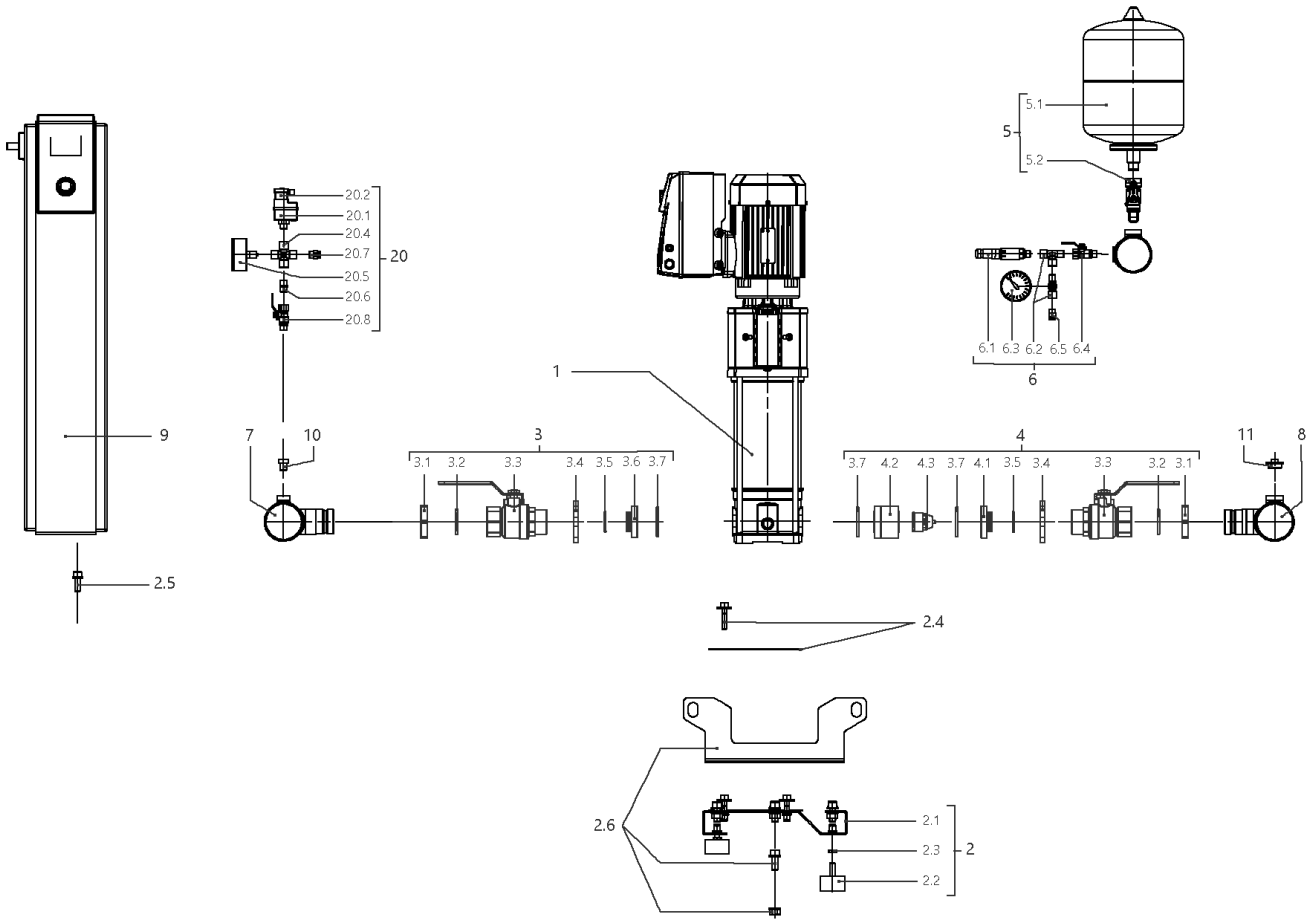
5.1
5
5.2
20.2
20.1
20.4
20.7
20
20.5
20.6
20.8
6.1 6.3 6.2 6.5 6.4
6
1
9
7
10
3
3.1 3.2 3.3 3.4 3.5 3.6 3.7
4
3.7 4.2 4.3 3.7 4.1 3.5 3.4 3.3 3.2 3.1
11
8
2.5
2.4
2.6
2.1
2.3
2
2.2

## SiBoost Smart 3HELIX VE405 (2537622)

| Item | Article no. | Description | Quantity |
|---|---|---|---|
| 1 | | HELIX VE405-1/16/E/S | 1 |
| Note: TO / BIS / JUSQU'AU 31/03/2016 | | | |
| 1 | 4201571 | HELIX VE405-1/16/E/S | 1 |
| Note: FROM / AB / À PARTIR DU 01/04/2016 | | | |
| 2 | 4200142 | BASE PLATE DE3 1150x420 KIT | 1 |
| Note: TO / BIS / JUSQU'AU 28/02/2013 | | | |
| 2.1 | | > BASEPLATE_3x4/6/10/16V_E300_BOX_150 | 1 |
| 2.2 | 2028654 | > VIBRATION DAMPER D.50X30 M10X28 | 1 |
| 2.3 | 2028281 | > NUT M10 DIN936 (ISO4035) 17H VZ | 1 |
| 2.4 | 4199875 | > HOLDER PUMP Siboost Helix V2/4 KIT | 1 |
| 2.5 | 4197084 | > HOLDER SWITCHBOX WILO Smart Control KIT | 1 |
| 2.6 | 4197117 | > LIFTING Siboost HELIX SC KIT | 1 |
| 2 | 4200137 | BASE PLATE DE3 1150x300 M10 KIT | 1 |
| Note: FROM / AB / À PARTIR DU 01/03/2013 | | | |
| 2.1 | | > BASEPLATE_3x4/6/10V_E300_1150x300BOX_150 | 1 |
| 2.2 | 2028654 | > VIBRATION DAMPER D.50X30 M10X28 | 1 |
| 2.3 | 2028281 | > NUT M10 DIN936 (ISO4035) 17H VZ | 1 |
| 2.4 | 4199875 | > HOLDER PUMP Siboost Helix V2/4 KIT | 1 |
| 2.5 | 4197084 | > HOLDER SWITCHBOX WILO Smart Control KIT | 1 |
| 2.6 | 4197085 | > LIFTING Siboost HELIX SC KIT | 1 |
| 3 | 4199876 | SUCTION SIDE Siboost Helix V2/4/6 KIT | 1 |
| 3.1 | 2032610 | > NUT G11/4 MS VP. | 1 |
| 3.2 | 2032611 | > O-RING ID.36,09X3,53N DIN3771 E7502 | 1 |
| 3.3 | 2507646 | > BALL VALVE G11/4"M-F-W.HANDLE 1/4-TURN | 1 |
| 3.4 | 2032613 | > SCREWED FLANGE G1 1/4" LK-75 ST37VZ | 1 |
| 3.5 | 2032614 | > O-RING ID.29,82X2,62N DIN3771 E7502 | 1 |
| 3.6 | 2032615 | > SPACER F.I/A KUH.DN32 CUZN | 1 |
| 3.7 | 2032616 | > O-RING ID.44X3,53N DIN3771 E7502 | 1 |
| 4 | 4199877 | DELIVERY SIDE Siboost Helix V2/4/6 KIT | 1 |
| 3.1 | 2032610 | > NUT G11/4 MS VP. | 1 |
| 3.2 | 2032611 | > O-RING ID.36,09X3,53N DIN3771 E7502 | 1 |
| 3.3 | 2507646 | > BALL VALVE G11/4"M-F-W.HANDLE 1/4-TURN | 1 |
| 3.4 | 2032613 | > SCREWED FLANGE G1 1/4" LK-75 ST37VZ | 1 |
| 3.5 | 2032614 | > O-RING ID.29,82X2,62N DIN3771 E7502 | 1 |

| Item | Article no. | Description | Quantity |
|---|---|---|---|
| 4.1 | 2058116 | > SPACER F.I/A KUH.DN32 CUZN | 1 |
| 3.7 | 2032616 | > O-RING ID.44X3,53N DIN3771 E7502 | 1 |
| 4.2 | 2058115 | > HOUSING RFV(RV-IN) DN32 SGS/DRS | 1 |
| 4.3 | 2027870 | > NON-RETURN-DEVICE INSERT DN32(MTR) | 1 |
| 5 | 2032642 | DIAPHREM TANK 8L/PN16 DIN4807/T5 KIT | 1 |
| 5.1 | 2045914 | > DIAPHREM TANK 8L TYP-DD 16BAR | 1 |
| 5.2 | 2027853 | > FLOW FITTING G3/4 FOR DIAPHRAGM VES. | 1 |
| 6 | 4197076 | PRESSURE SENSOR/ GAUGE 0-16BAR KIT | 1 |
| 6.1 | 2085909 | > PRESS.SENSOR 1/4" 0-16BAR 4-20MA VP. | 1 |
| 6.2 | 4197077 | > T-PIECE 1/4" VP. | 1 |
| 6.3 | 2028692 | > PRESSURE GAUGE NG63-PN16-G1/4 | 1 |
| 6.4 | 2028291 | > BALL TAP R1/4" PN42 GIACOMINI R254DL | 1 |
| 6.5 | 2028691 | > BLOWGUN 1/4" MS 30BAR VP. | 1 |
| 7 | 4200138 | PIPE DE3 2''-3x11/4"+2x1/4x900 VP. | 1 |
| 8 | 4200139 | PIPE DE3 2''-3x11/4"+2x1/4+1x3/4x900 VP. | 1 |
| 9 | | W-CTRL-SCE-B-3x1,1KW-T4-FM-ND2 | 1 |
| Note: TO / BIS / JUSQU'AU 28/02/2013 | | | |
| 9 | | W-CTRL-SCE-B-3x0,55-1,5KW-T4-FM-ND1 | 1 |
| Note: FROM / AB / À PARTIR DU 01/03/2013 - TO / BIS / JUSQU'AU 18/05/2014 | | | |
| 9 | 2541914 | W-CTRL-SCE-B-3x10A-T34-FM-ND1-AVC-PKG | 1 |
| Note: FROM / AB / À PARTIR DU 19/05/2014 | | | |
| 10 | 4197079 | PLUG G1/4"x10 AISI304 KIT | 1 |
| 11 | 2032654 | PLUG R3/4" MS VIEGA 1751 | 1 |
| 20 | 2521150 | ASSEMBLY WMS. DE-EB. +VP | 1 |
| 20.1 | 2028652 | > PRESSURE SWITCH PS3-ASR 1/(1,3) VP. | 1 |
| 20.2 | 2130983 | > PLUG PS3-415 WITH KABEL 1,5M 2NO VP. | 1 |
| 20.4 | 2028290 | > CROSSPIECE R1/4" MS-NICKEL | 1 |
| 20.5 | 2028687 | > PRESSURE GAUGE NG63 R1/4" HI.0-6BAR | 1 |
| 20.6 | 2054268 | > DUAL NIPPLE G1/4" x G1/4" MS VP. | 1 |
| 20.7 | 2028691 | > BLOWGUN 1/4" MS 30BAR VP. | 1 |
| 20.8 | 2028291 | > BALL TAP R1/4" PN42 GIACOMINI R254DL | 1 |

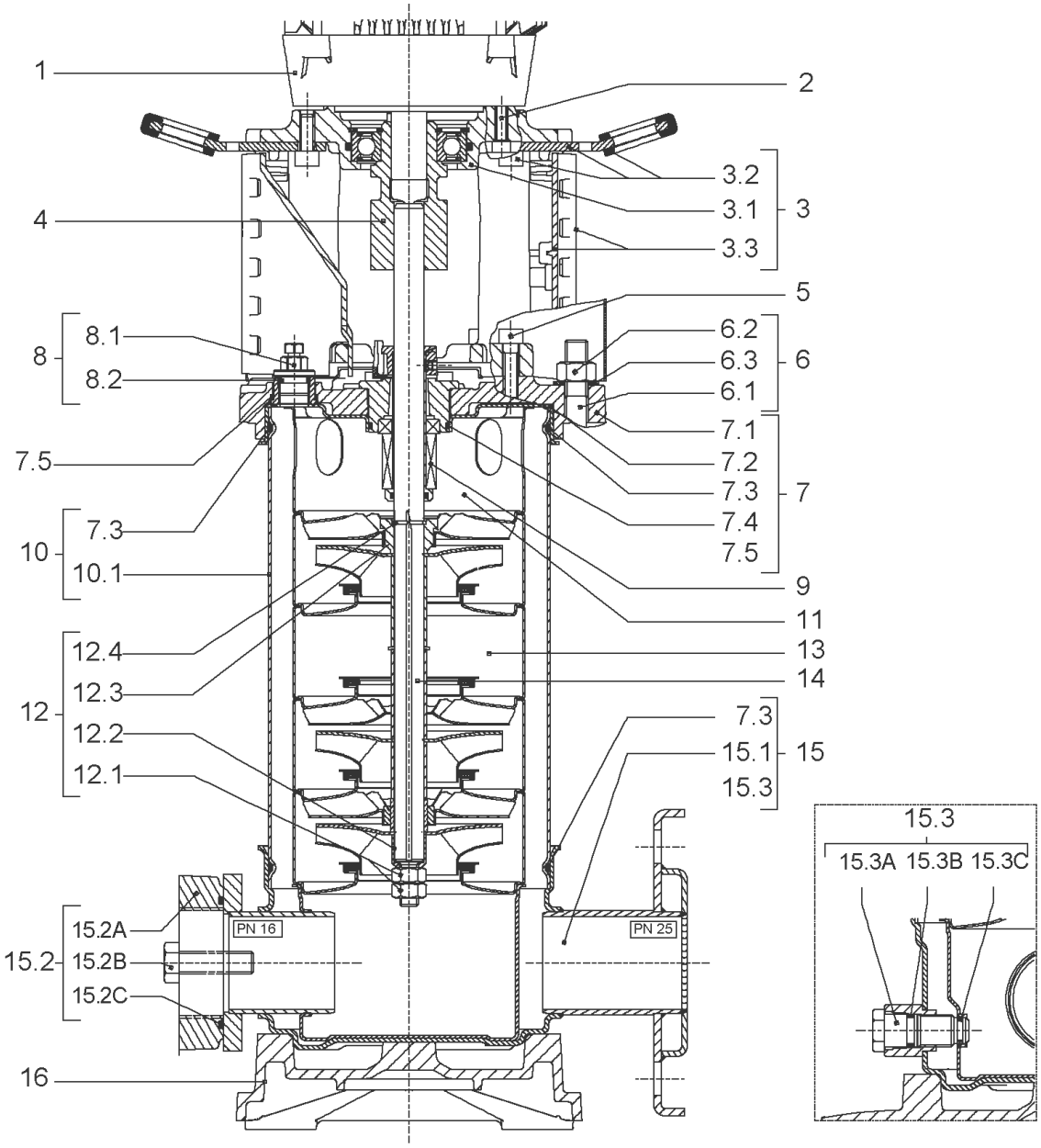
1
2
3.2
3.1
3
3.3
4
5
8.1
8
8.2
6.2
6.3
6
6.1
7.1
7.5
7.2
7.3
7
7.4
7.3
10
7.5
10.1
9
11
12.4
13
12.3
14
12
12.2
7.3
15.1
15
12.1
15.3
15.3
15.3A 15.3B 15.3C
15.2A
PN 16
PN 25
15.2
15.2B
15.2C
16

| Item | Article no. | Description | Quantity |
|---|---|---|---|
| 1 | | DRIVE HELIX-VE405-IE2-WE KIT | 1 |
| Note: MOTOR BRAND WILO ELEC | | | |
| 1 | | DRIVE HELIX-VE405-IE4-WE KIT | 1 |
| Note: MOTOR BRAND WILO ELEC | | | |
| 2 | 4159702 | SCREW M6X30 (4 PIECES) | 1 |
| 3 | 4172790 | EQUIPED LANTERN NEXIS FT 100 KIT | 1 |
| 3.1 | | > M+5_6_LANTERN_ONE-PIECE_FT100_CATA | 1 |
| 3.2 | 2127604 | > EYELET CPL.FT HELIX(2 PIECES) | 1 |
| 3.3 | 4159692 | > COUPLING PROTECTOR FT HELIX KIT | 1 |
| 4 | 4178578 | COUPLING D.12XD.19 FT100 KIT | 1 |
| 5 | 4159707 | SCREW M8X30 (4 PIECES) | 1 |
| 6 | 4178579 | STUD BOLT M12X317 KIT | 1 |
| 6.1 | | > TIE BOLT M12-317x18x30-1.4057 | 1 |
| 6.2 | 2094647 | > NUT M12 M12 ISO4032 VP. | 1 |
| 6.3 | 2123557 | > WASHER CS-12.4-24-1.6-NFE25 (4 PIECES) | 1 |
| 7 | 4210143 | STATIONARY RING HOLDER HELIX 6" EPDM | 1 |
| 7.2 | 2127607 | > STATIONARY RING HOLDER 6" HELIX 1.4301 V | 1 |
| 7.3 | 4176513 | > O-RING FOR PUMP JACKET VP. | 1 |
| 7.4 | 2127603 | > O-RING ID.37,6x2,4 EPDM VP. | 1 |
| 7.5 | 2127602 | > O-RING ID.21,35x2 EPDM VP. | 1 |
| 8 | 4159686 | FILING/PURGING PLUG HELIX EPDM KIT | 1 |
| 9 | 4178564 | SEAL-KIT-HELIX2-4 O/E KIT | 1 |
| 10 | 4178580 | HOUSING PIPE D.152X184 1.4301 KIT | 1 |
| 7.3 | 4176513 | > O-RING FOR PUMP JACKET VP. | 1 |
| 10.1 | | > HOUSING-PIPE Ø152-M+205/405-304 | 1 |
| 11 | 4178566 | CENTERING STAGE-RETURN HELIX4 1.4307 VP | 1 |
| 12 | 4178568 | SHAFT EQUIPMENT HELIX V2/V4 KIT | 1 |
| 12.1 | | > NUT-H-M8-STAINLESS-STEEL A4-70 | 2 |
| 12.2 | | > SHAFT END WASHER Ø8/Ø12 316L | 1 |
| 12.3 | | > STOP COLLAR OF IMPELLER M+2/4 SINGLEBLOC | 1 |
| 12.4 | | > STOP-RUSH-1/2-D12xd2-M+316 | 2 |
| 13 | | HYDRAULIC HELIX V 405 1.4307 | 1 |
| 14 | 4178582 | SHAFT D.12X308 1.4301 VP. | 1 |
| 15 | 4174079 | PUMP HOUSING HELIX DN32 PN16 1.4301 KIT | 1 |

| Item | Article no. | Description | Quantity |
|---|---|---|---|
| 7.3 | 4176513 | > O-RING FOR PUMP JACKET VP. | 1 |
| 15.1 | | > BLASTING PPE HOUSING V-PN16-DN32-5"-304 | 1 |
| 15.2 | 4217889 | > COUNTER FLANGE-G1"-PN16-GJL KIT | 1 |
| 15.3 | 4171321 | > PRIMING/DRAIN PLUG EPDM HELIX KIT | 1 |
| 16 | 4177964 | BASEPLATE HELIX V2/4/6 PN16 VP. | 1 |

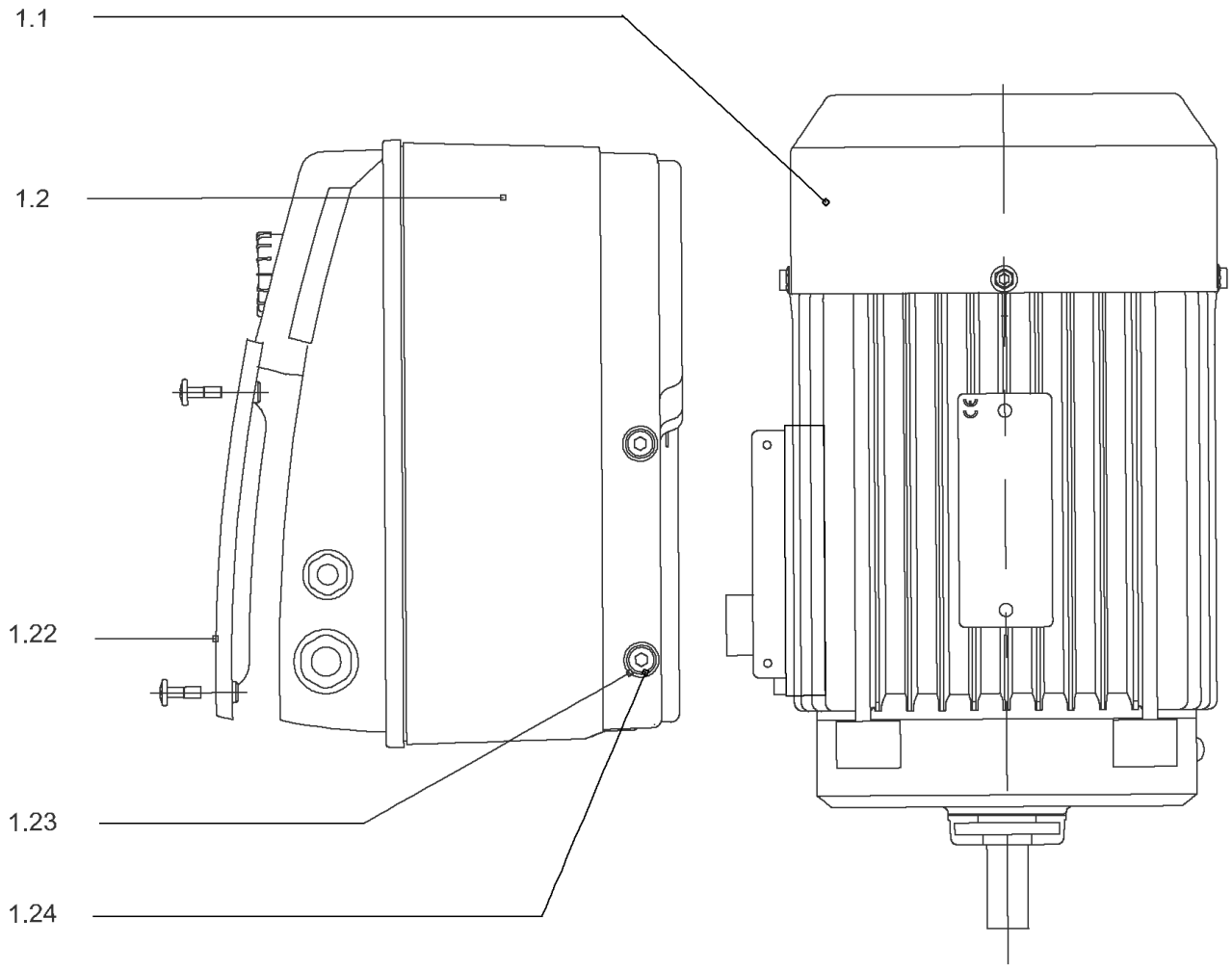
1.1
1.2
1.22
1.23
1.24

## DRIVE HELIX-VE405-IE2-WE KIT

| Item | Article no. | Description | Quantity |
|---|---|---|---|
| 1.1 | 4184817 | MOTOR 1,1/2/80 3~ 380V 60HZ IE2 WE VP. | 1 |
| | | SPARE PARTS MOTOR:ON REQUEST | 1 |
| 1.2 | 4186765 | MODULE HELIX-VE405-IE2-WE KIT | 1 |
| 1.22 | 2054372 | > MODULE COVER TL1,TL2+GASKET KIT | 1 |
| 1.23 | 4215716 | > SCREW M5X16 DIN912 8.8 A2A (4pieces) VP. | 1 |
| 1.24 | 2057978 | > RONDELLE A5,3 DIN6797 FST ZN (4 PIECES) | 1 |

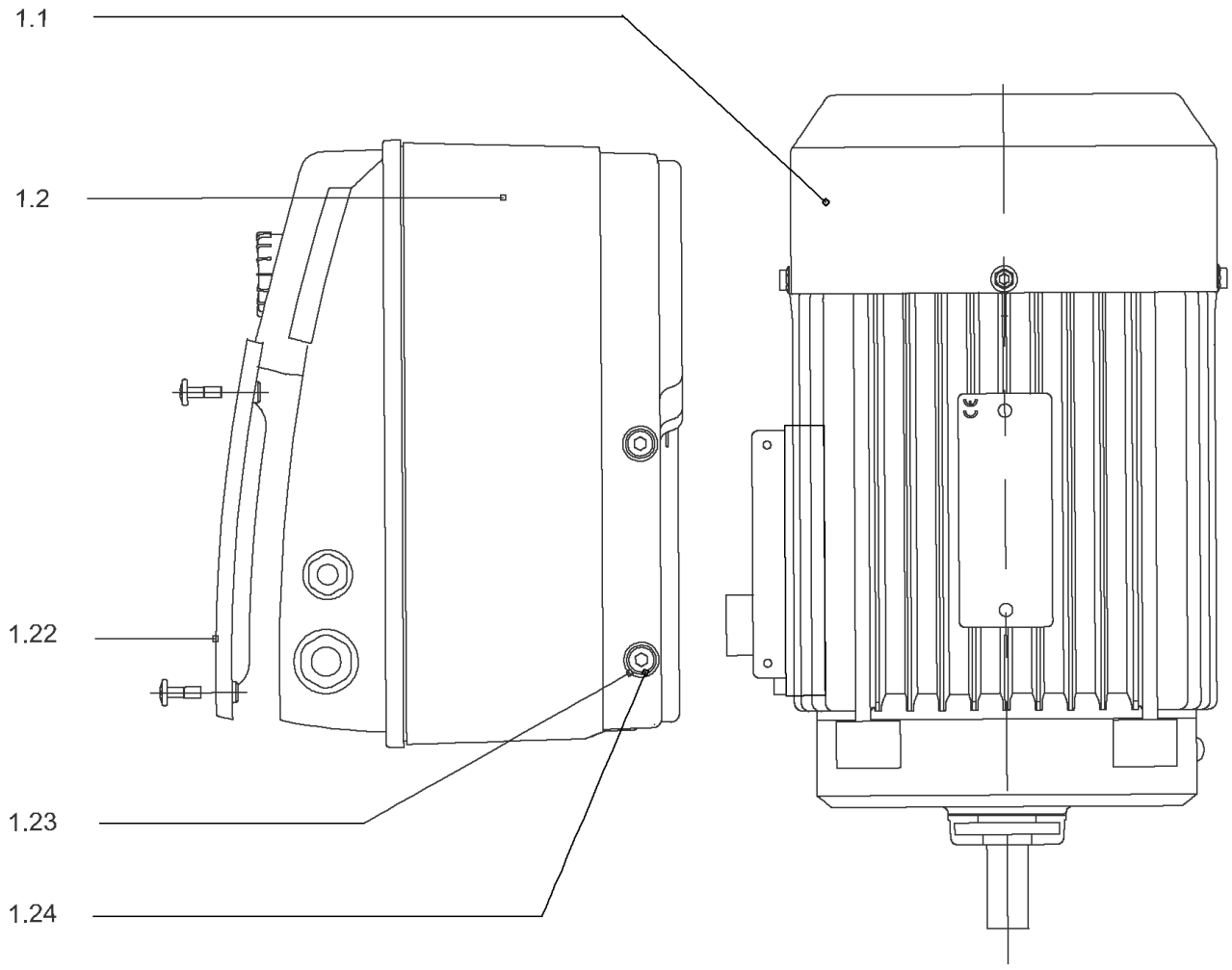
1.1
1.2
1.22
1.23
1.24

## DRIVE HELIX-VE405-IE4-WE KIT

| Item | Article no. | Description | Quantity |
|---|---|---|---|
| 1.1 | 4207916 | MOTOR 1.1/2/80 3~ 380V 60HZ IE4 WE VP. | 1 |
| | | SPARE PARTS MOTOR:ON REQUEST | 1 |
| 1.2 | 4209598 | MODULE HELIX-VE405-IE4-WE KIT | 1 |
| 1.22 | 2054372 | > MODULE COVER TL1,TL2+GASKET KIT | 1 |
| 1.23 | 4215716 | > SCREW M5X16 DIN912 8.8 A2A (4pieces) VP. | 1 |
| 1.24 | 2057978 | > RONDELLE A5,3 DIN6797 FST ZN (4 PIECES) | 1 |

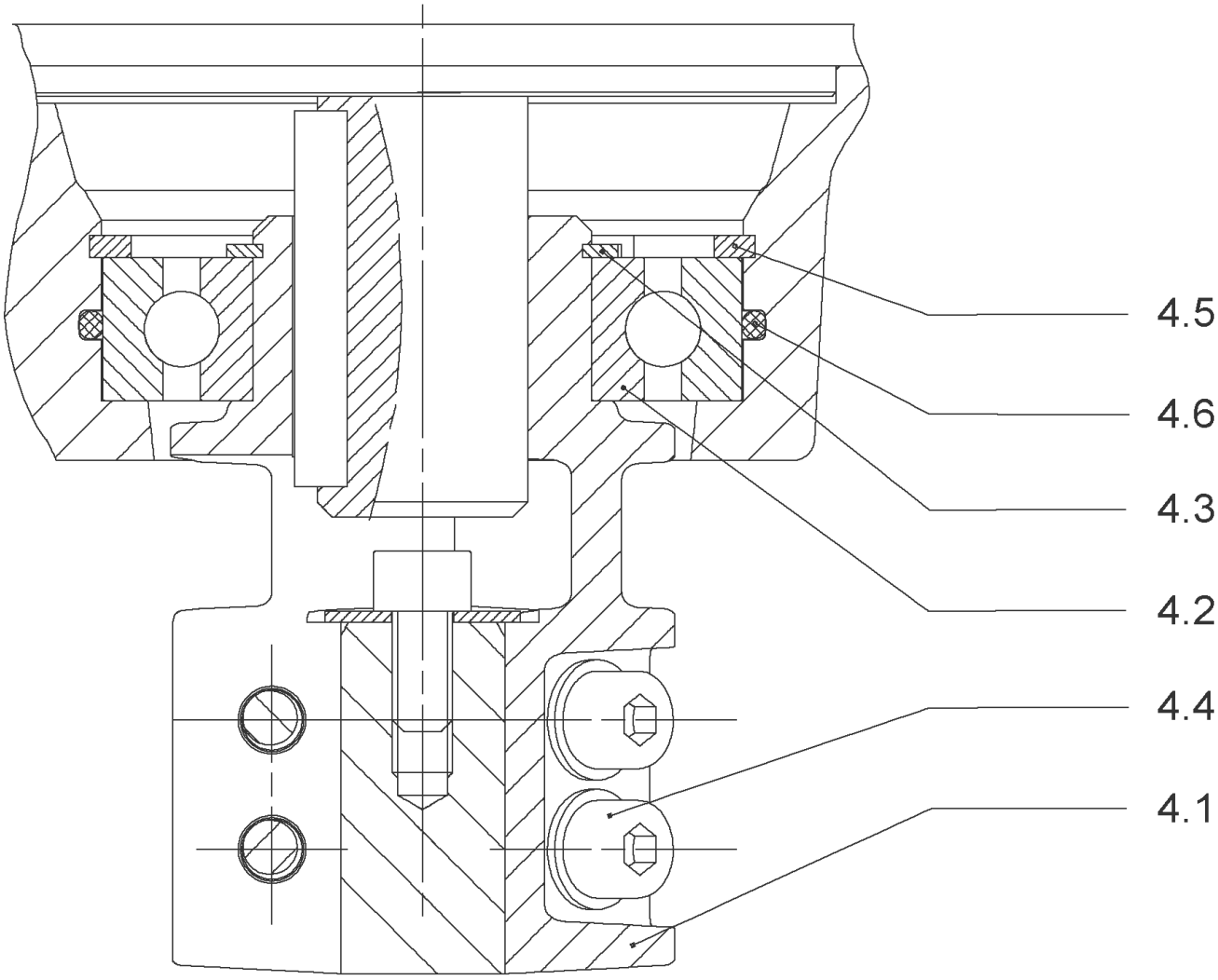
4.5
4.6
4.3
4.2
4.4
4.1

## COUPLING D.12XD.19 FT100 KIT (4178578)

| Item | Article no. | Description | Quantity |
|---|---|---|---|
| 4.1 | | COUPLING-M+ Ø12XØ19-FT100-MACHINED | 1 |
| 4.3 | 4234249 | CIRCLIP-FOR-SHAFT-D30x1.5 VP. | 1 |
| 4.2 | 2130977 | BALL BEARING 6206/ZZ-C3(HT)VP. | 1 |
| 4.4 | 4212716 | SCREW M6X20 KIT (4PIECES) | 1 |
| 4.5 | 4234250 | CIRCLIP-D62x2 VP. | 1 |
| 4.6 | 4234245 | O-RING 63X3 VP. | 1 |
| | | CONTACT-WASHER-6ETR-6,1x12,2x1,8-STEEL | 4 |

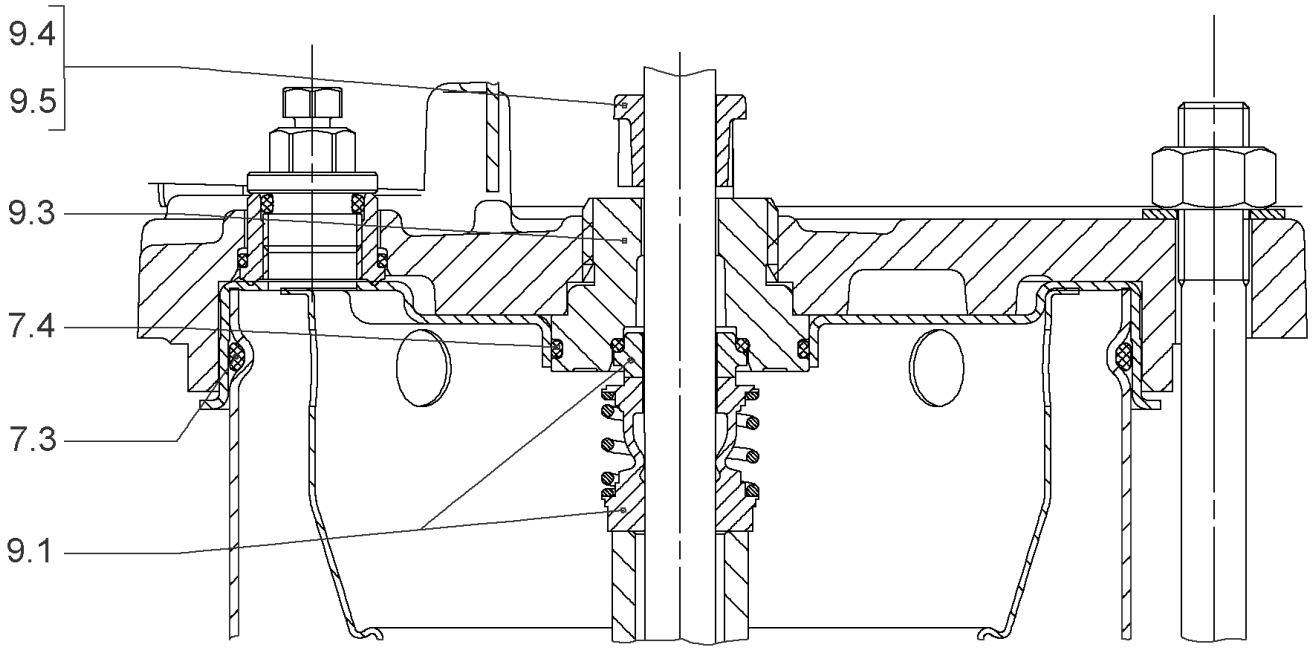
9.4
9.5
9.3
7.4
7.3
9.1

## SEAL-KIT-HELIX2-4 O/E KIT (4178564)

| Item | Article no. | Description | Quantity |
|---|---|---|---|
| 7.3 | 4176513 | O-RING FOR PUMP JACKET VP. | 1 |
| 7.4 | 2127603 | O-RING ID.37,6x2,4 EPDM VP. | 1 |
| 9.1 | 4178563 | M.SEAL.HELIX2-4 O/E VP. | 1 |
| 9.3 | 4178561 | RING HOLDER Ø22 1.4301 VP. | 1 |
| 9.5 | 4178562 | DRIVE RING D.22/12.2X10 MACH.VP. | 1 |
| 9.4 | 4176520 | SCREW CH M5x5 A4-70 ( 3PIECES ) | 1 |

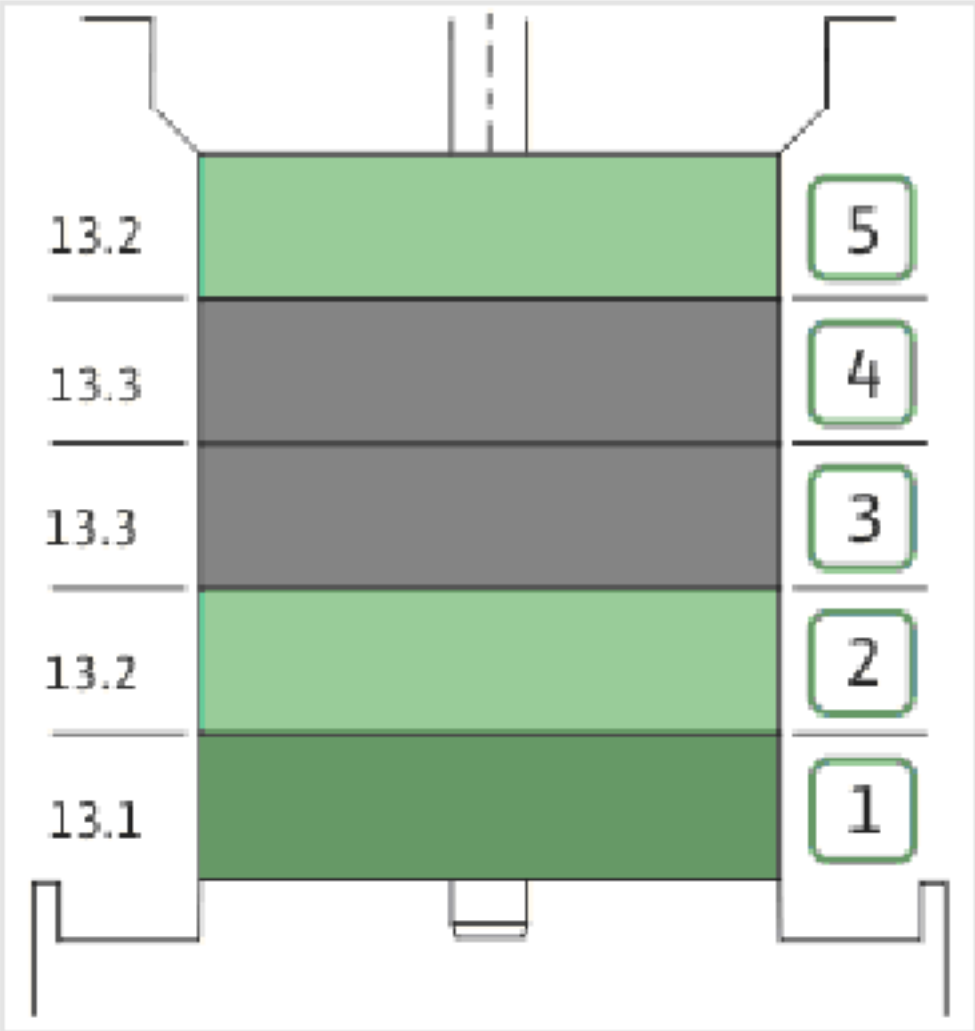
13.2
13.3
13.3
13.2
13.1
5
4
3
2
1

## HYDRAULIC HELIX V 405 1.4307

| Item | Article no. | Description | Quantity |
|---|---|---|---|
| 13.1 | 4178570 | STAGE HELIX 4 1.4301 KIT | 1 |
| | | > MACH.STG-CASING-WOGV-WNR-M+2-4-304 | 1 |
| | | > IMPELLER-M+4-304 | 1 |
| 13.2 | 4178569 | STAGE BEARING HELIX 4 1.4301 KIT | 1 |
| | | > MACH.BEARING-STG-CASING-WNR-M+4-304 | 1 |
| | | > IMPELLER-M+4-304 | 1 |
| | | > SHAFT SLEEVE SPACER Ø15,35x10,305-304 | 1 |
| | | > SHAFT-SLEEVE-D12xD16x14-CW | 1 |
| 13.3 | 4178574 | INTER STAGE HELIX4 1.4301< 15 stages KIT | 1 |
| | | > MACH.STD-STG-CASING-WGV+NR-M+4-304 | 1 |
| | | > IMPELLER-M+4-304 | 1 |
| | | > IMPELLER SPACER Ø12,05X14,85-L24,285-304 | 1 |

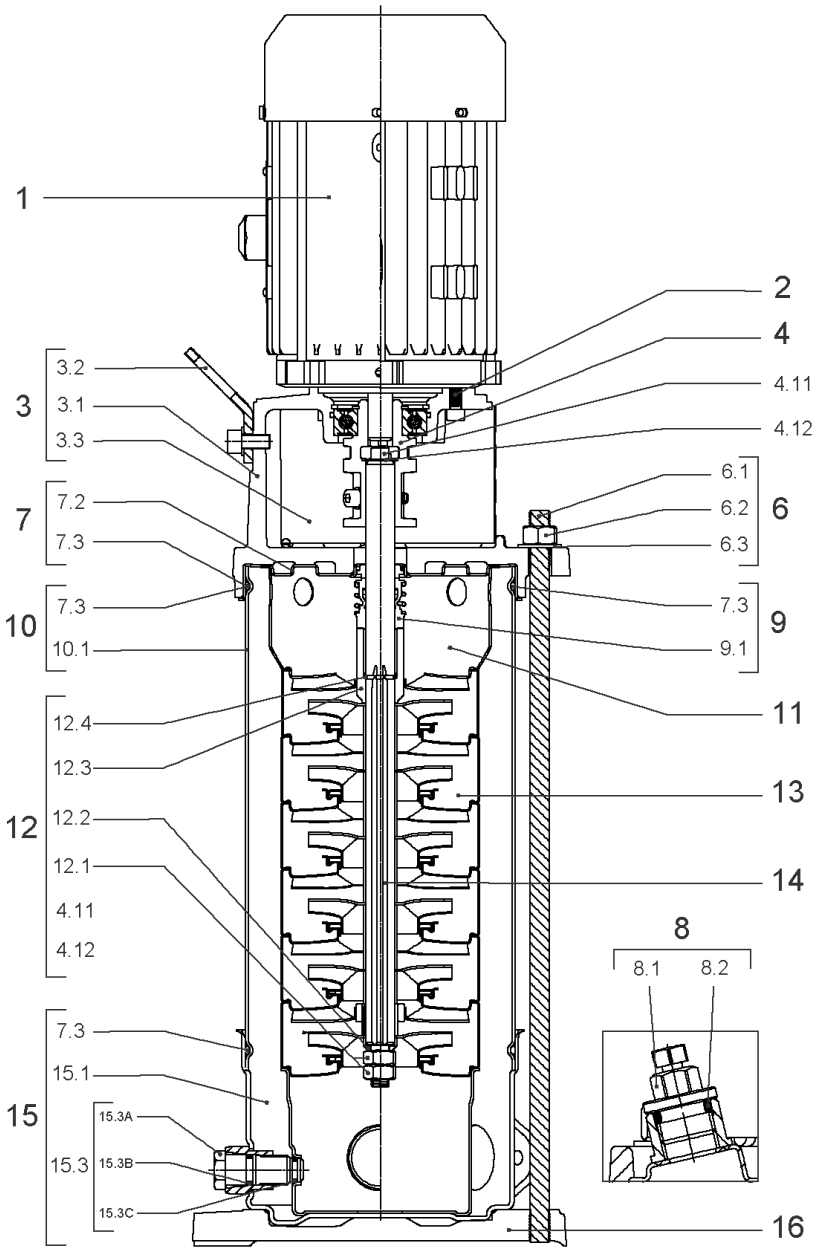
1
2
4
4.11
4.12
3
3.2
3.1
3.3
7
7.2
7.3
6
6.1
6.2
6.3
10
7.3
10.1
9
7.3
9.1
11
12
12.4
12.3
12.2
12.1
4.11
4.12
13
14
8
8.1
8.2
15
7.3
15.1
15.3
15.3A
15.3B
15.3C
16

## HELIX VE405-1/16/E/S (4201571)

| Item | Article no. | Description | Quantity |
|---|---|---|---|
| 1 | | DRIVE HELIX-VE405-IE4-WE KIT | 1 |
| Note: MOTOR BRAND WILO ELEC | | | |
| | | SPARE PARTS MOTOR:ON REQUEST | 1 |
| 2 | 4212716 | SCREW M6X20 KIT (4PIECES) | 1 |
| 3 | 4213752 | LANTERN FT100 HELIX KIT | 1 |
| 3.1 | | > LANT-MOT-VMI-ReDTC6"-FT100-MACHINED+CATA | 1 |
| 3.2 | 4184852 | > EYELET CPL.FT HELIX (2 PIECES) | 1 |
| 3.3 | 4213713 | > COUPLING PROTECTOR FT85/100 HELIX KIT | 1 |
| 4 | 4178578 | COUPLING D.12XD.19 FT100 KIT | 1 |
| 6 | 4178579 | STUD BOLT M12X317 KIT | 1 |
| 6.1 | | > TIE BOLT M12-317x18x30-1.4057 | 1 |
| 6.2 | 2094647 | > NUT M12 M12 ISO4032 VP. | 1 |
| 6.3 | 2123557 | > WASHER CS-12.4-24-1.6-NFE25 (4 PIECES) | 1 |
| 7 | 4212722 | STATIONARY RING HOLDER HELIX D23 ReDTC | 1 |
| 7.2 | 4212720 | > STATIONARY RING HOLDER HELIX D23 VP. | 1 |
| 7.3 | 4176513 | > O-RING FOR PUMP JACKET VP. | 1 |
| 8 | 4212724 | FILING/PURGING PLUG HELIX ReDTC KIT | 1 |
| 8.1 | | > FILLING PLUG MVI6"-304 | 1 |
| 8.2 | 4177800 | > O-RING EPDM PLUG HELIX VP. | 1 |
| 9 | 4212726 | MECH.SEAL HELIX V2/4 O/E ReDTC KIT | 1 |
| 9.1 | 4178563 | > M.SEAL.HELIX2-4 O/E VP. | 1 |
| 7.3 | 4176513 | > O-RING FOR PUMP JACKET VP. | 1 |
| 10 | 4178580 | HOUSING PIPE D.152X184 1.4301 KIT | 1 |
| 7.3 | 4176513 | > O-RING FOR PUMP JACKET VP. | 1 |
| 10.1 | | > HOUSING-PIPE Ø152-M+205/405-304 | 1 |
| 11 | 4178566 | CENTERING STAGE-RETURN HELIX4 1.4307 VP | 1 |
| 12 | 4212729 | SHAFT EQUIPMENT HELIX V2/4 ReDTC KIT | 1 |
| 12.1 | | > NUT-H-M8-STAINLESS-STEEL A4-70 | 1 |
| 12.2 | | > SHAFT END WASHER Ø8/Ø12 316L | 1 |
| 12.3 | | > 1/2-SNAP-RING-2/4M3-316L | 1 |
| 12.4 | | > STOP-RUSH-1/2-D12xd2-M+316 | 1 |
| 4.11 | | > SCREW CHC-M6X14-8.8-ISO4762-GEOMET500A | 1 |
| 4.12 | | > WASHER D.24 L6U ZINK | 1 |
| 13 | | HYDRAULIC HELIX V 405 1.4307 | 1 |

| Item | Article no. | Description | Quantity |
|---|---|---|---|
| 14 | 4213746 | SHAFT D.12X256 HELIX 1.4057 VP. | 1 |
| 15 | 4174079 | PUMP HOUSING HELIX DN32 PN16 1.4301 KIT | 1 |
| 7.3 | 4176513 | > O-RING FOR PUMP JACKET VP. | 1 |
| 15.1 | | > BLASTING PPE HOUSING V-PN16-DN32-5"-304 | 1 |
| 15.2 | 4217889 | > COUNTER FLANGE-G1"-PN16-GJL KIT | 1 |
| 15.3 | 4171321 | > PRIMING/DRAIN PLUG EPDM HELIX KIT | 1 |
| 16 | 4177964 | BASEPLATE HELIX V2/4/6 PN16 VP. | 1 |

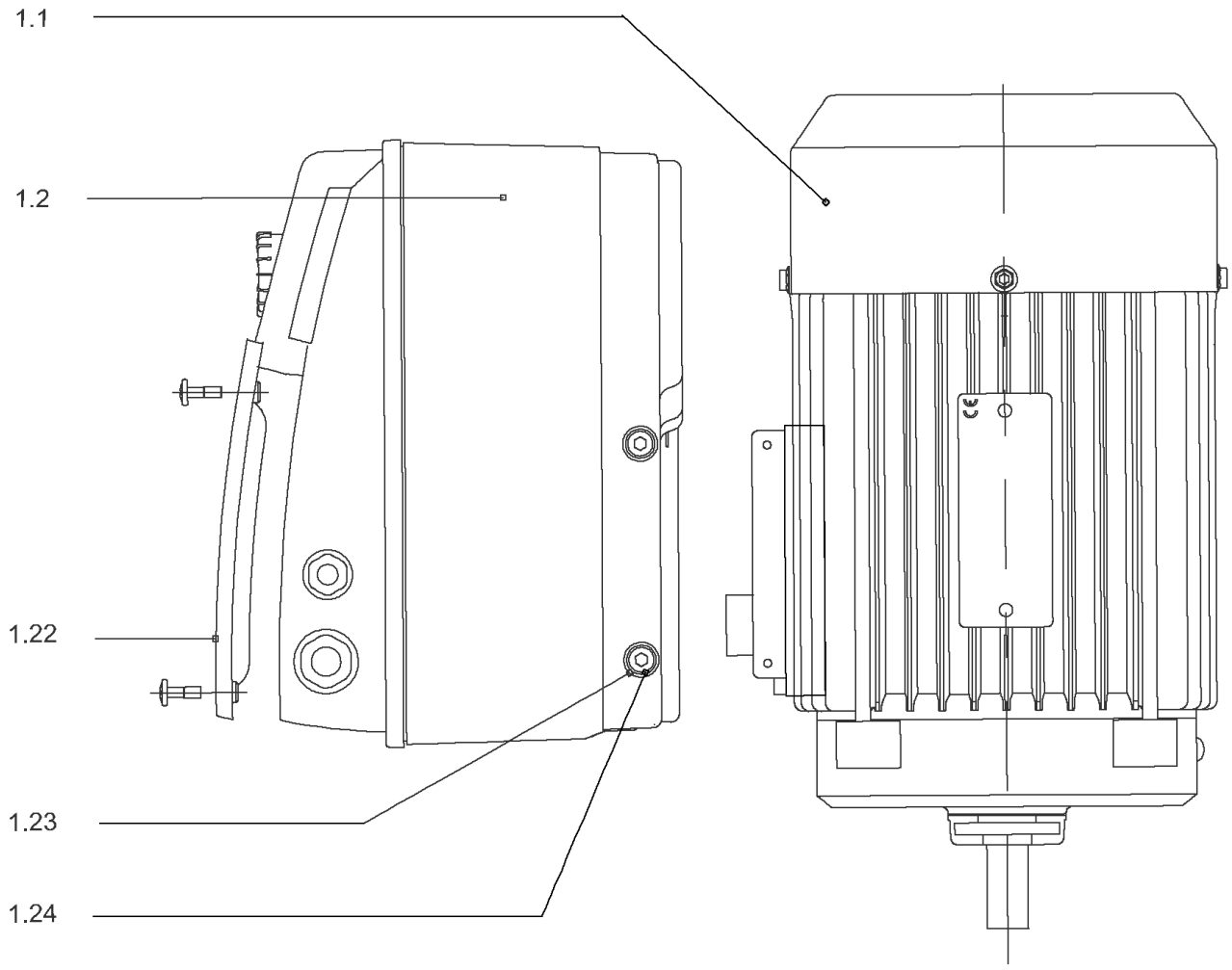
1.1
1.2
1.22
1.23
1.24

## DRIVE HELIX-VE405-IE4-WE KIT

| Item | Article no. | Description | Quantity |
|---|---|---|---|
| 1.1 | 4207916 | MOTOR 1.1/2/80 3~ 380V 60HZ IE4 WE VP. | 1 |
| | | SPARE PARTS MOTOR:ON REQUEST | 1 |
| 1.2 | 4209598 | MODULE HELIX-VE405-IE4-WE KIT | 1 |
| 1.22 | 2054372 | > MODULE COVER TL1,TL2+GASKET KIT | 1 |
| 1.23 | 4215716 | > SCREW M5X16 DIN912 8.8 A2A (4pieces) VP. | 1 |
| 1.24 | 2057978 | > RONDELLE A5,3 DIN6797 FST ZN (4 PIECES) | 1 |

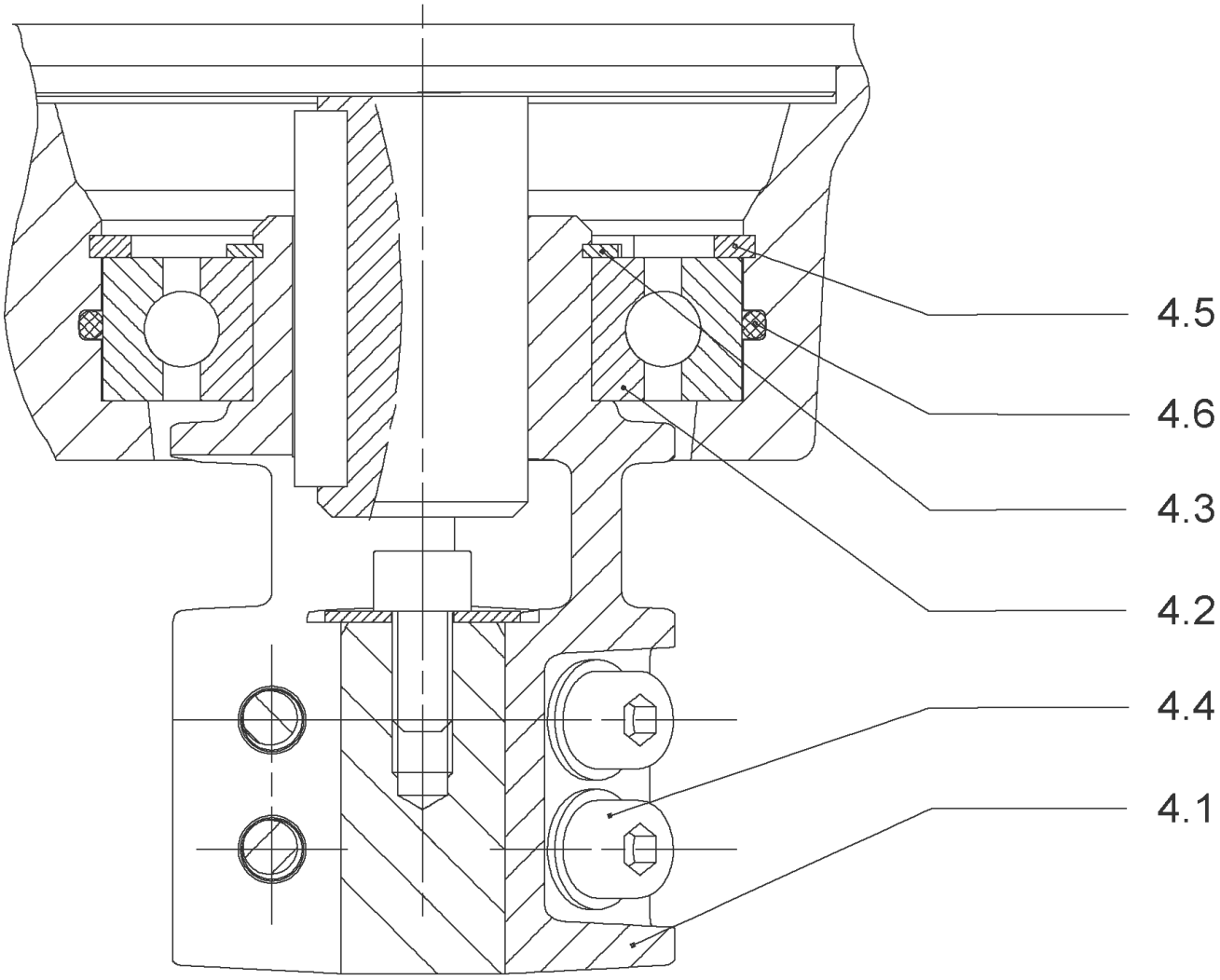
4.5
4.6
4.3
4.2
4.4
4.1

## COUPLING D.12XD.19 FT100 KIT (4178578)

| Item | Article no. | Description | Quantity |
|---|---|---|---|
| 4.1 | | COUPLING-M+ Ø12XØ19-FT100-MACHINED | 1 |
| 4.3 | 4234249 | CIRCLIP-FOR-SHAFT-D30x1.5 VP. | 1 |
| 4.2 | 2130977 | BALL BEARING 6206/ZZ-C3(HT)VP. | 1 |
| 4.4 | 4212716 | SCREW M6X20 KIT (4PIECES) | 1 |
| 4.5 | 4234250 | CIRCLIP-D62x2 VP. | 1 |
| 4.6 | 4234245 | O-RING 63X3 VP. | 1 |
| | | CONTACT-WASHER-6ETR-6,1x12,2x1,8-STEEL | 4 |

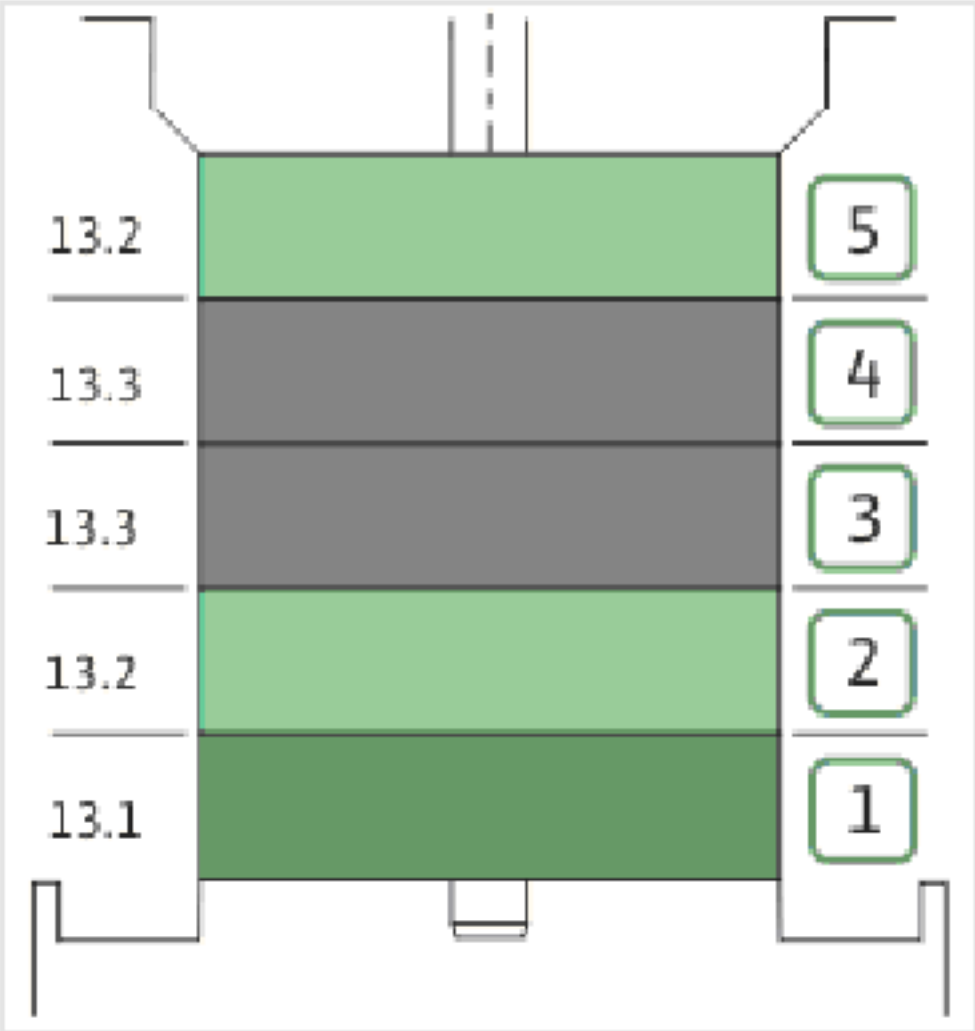
13.2
13.3
13.3
13.2
13.1
5
4
3
2
1

| Item | Article no. | Description | Quantity |
|---|---|---|---|
| 13.1 | 4178570 | STAGE HELIX 4 1.4301 KIT | 1 |
| | | > MACH.STG-CASING-WOGV-WNR-M+2-4-304 | 1 |
| | | > IMPELLER-M+4-304 | 1 |
| 13.2 | 4178569 | STAGE BEARING HELIX 4 1.4301 KIT | 1 |
| | | > MACH.BEARING-STG-CASING-WNR-M+4-304 | 1 |
| | | > IMPELLER-M+4-304 | 1 |
| | | > SHAFT SLEEVE SPACER Ø15,35x10,305-304 | 1 |
| | | > SHAFT-SLEEVE-D12xD16x14-CW | 1 |
| 13.3 | 4178574 | INTER STAGE HELIX4 1.4301< 15 stages KIT | 1 |
| | | > MACH.STD-STG-CASING-WGV+NR-M+4-304 | 1 |
| | | > IMPELLER-M+4-304 | 1 |
| | | > IMPELLER SPACER Ø12,05X14,85-L24,285-304 | 1 |

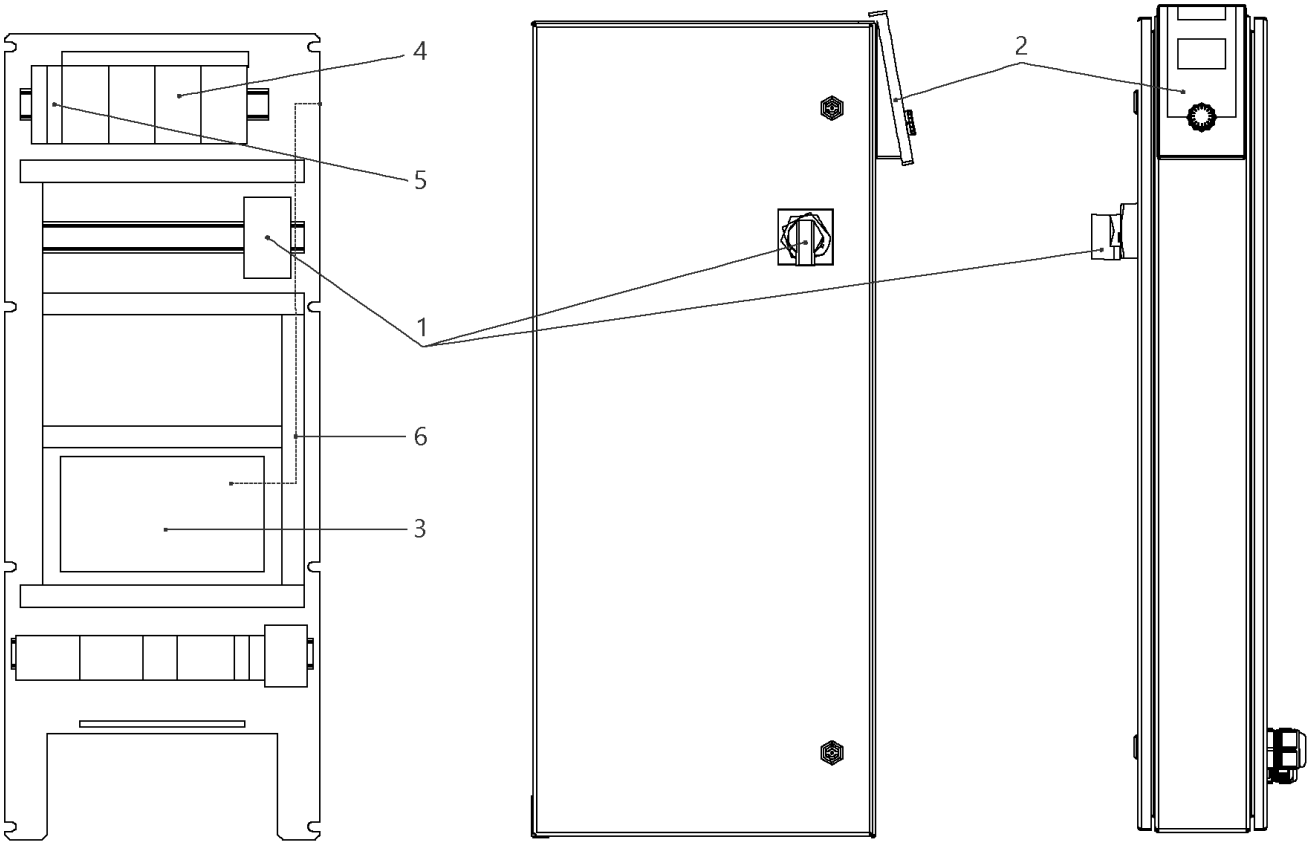
4
5
1
6
3
2

## W-CTRL-SCE-B-3x1,1KW-T4-FM-ND2

| Item | Article no. | Description | Quantity |
|---|---|---|---|
| 1 | 2104470 | MAIN SWITCH OT40F3 L250 KIT | 1 |
| 2 | 4184784 | CONTROL PANEL HMI SC KIT | 1 |
| 2 | 4185259 | ASSEMBLY DISPLAY SC PKG VP. | 1 |
| 3 | 4185257 | ASSEMBLY CPU SCe Booster VP. | 1 |
| 4 | 2051217 | AUTOM.CIRCUIT BREAKER S203 B16 TO7,5kW | 1 |
| 5 | 2046288 | CIRCUIT BREAKER S201 B16 | 1 |
| 6 | 4194956 | PATCH CABLE RJ45 CAT6 1,0M BLUE SC-PANEL | 1 |

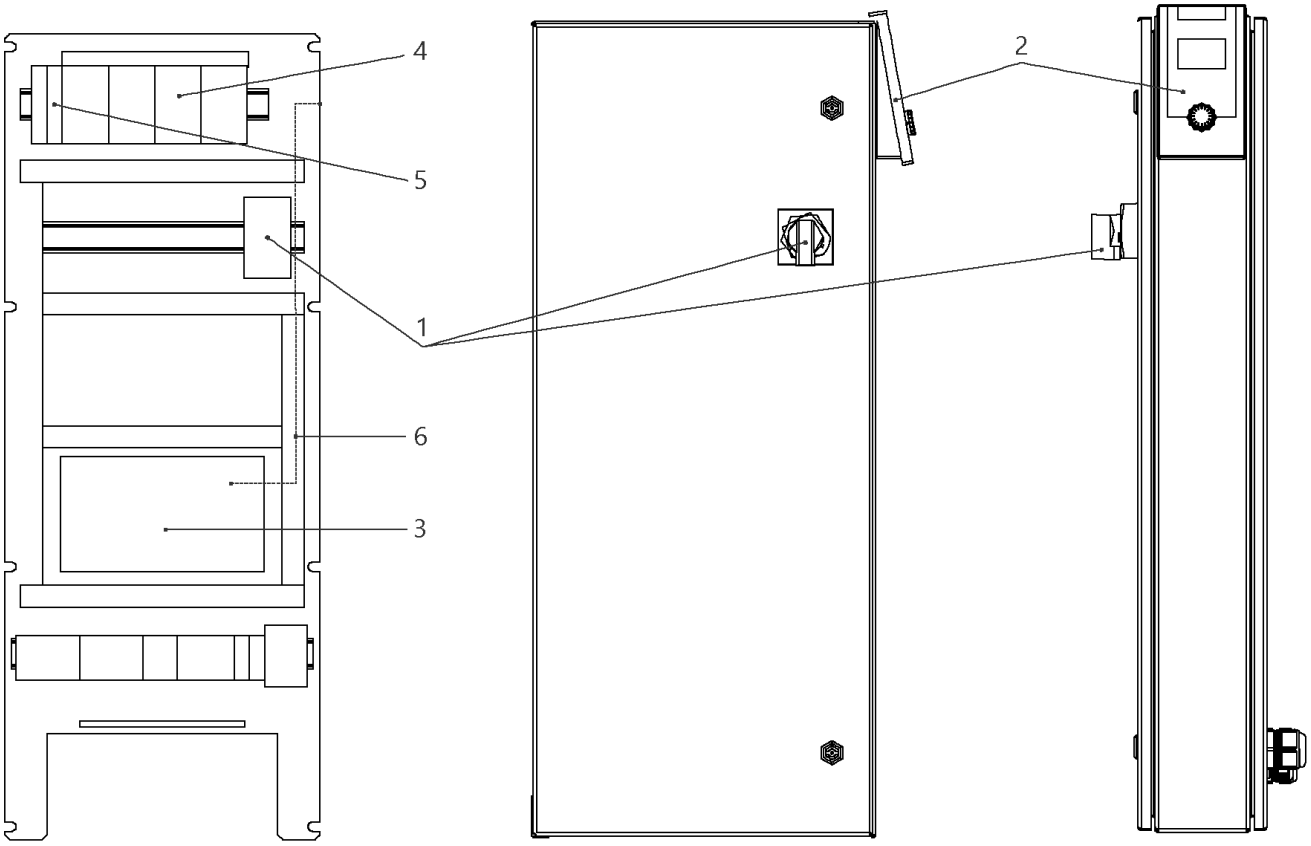
4
5
1
6
3
2

## W-CTRL-SCE-B-3x0,55-1,5KW-T4-FM-ND1

| Item | Article no. | Description | Quantity |
|---|---|---|---|
| 1 | 2104470 | MAIN SWITCH OT40F3 L250 KIT | 1 |
| 2 | 4184784 | CONTROL PANEL HMI SC KIT | 1 |
| 2 | 4185259 | ASSEMBLY DISPLAY SC PKG VP. | 1 |
| 3 | 4185257 | ASSEMBLY CPU SCe Booster VP. | 1 |
| 4 | 2051217 | AUTOM.CIRCUIT BREAKER S203 B16 TO7,5kW | 1 |
| 5 | 2046288 | CIRCUIT BREAKER S201 B16 | 1 |
| 6 | 4197081 | CABLE RJ45 CAT6 0,5M RED SC-PANEL VP. | 1 |

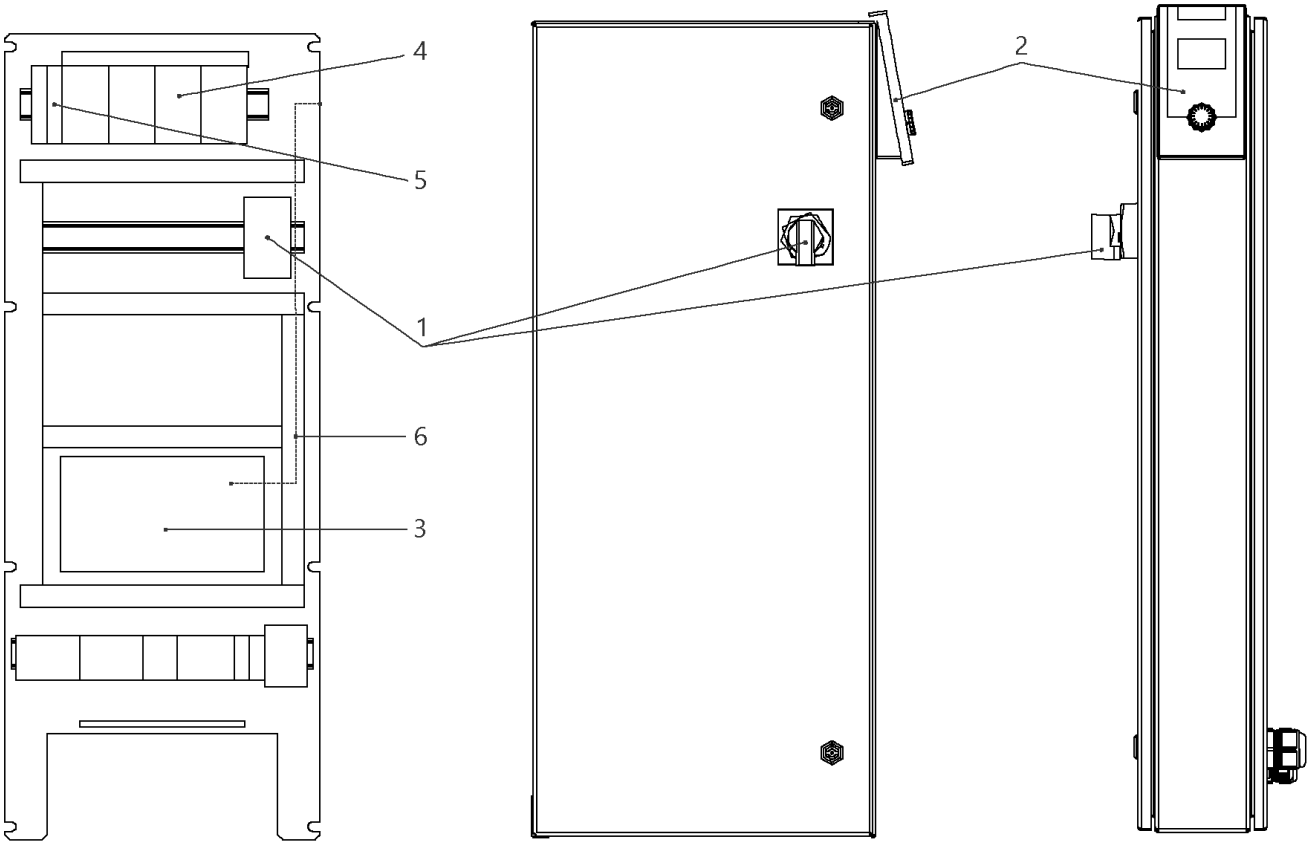
4
5
1
6
3
2

## W-CTRL-SCE-B-3x10A-T34-FM-ND1-AVC-PKG (2541914)

| Item | Article no. | Description | Quantity |
|---|---|---|---|
| 1 | 2104473 | MAIN SWITCH OT63F3 L105 KIT | 1 |
| Note: TO / BIS / JUSQU'AU 30/06/2015 | | | |
| 1 | 2104470 | MAIN SWITCH OT40F3 L250 KIT | 1 |
| Note: FROM / AB / À PARTIR DU 01/07/2015 | | | |
| 2 | 4184784 | CONTROL PANEL HMI SC KIT | 1 |
| 2 | 4185259 | ASSEMBLY DISPLAY SC PKG VP. | 1 |
| Note: DISPLAY ALONE / PLATINE SEULE | | | |
| 3 | 4185257 | ASSEMBLY CPU SCe Booster VP. | 1 |
| 4 | 2119861 | AUTOMATIC CIRCUIT BREAKER S203 B13 3POL. | 1 |
| 5 | 2046288 | CIRCUIT BREAKER S201 B16 | 1 |
| 6 | 4197081 | CABLE RJ45 CAT6 0,5M RED SC-PANEL VP. | 1 |

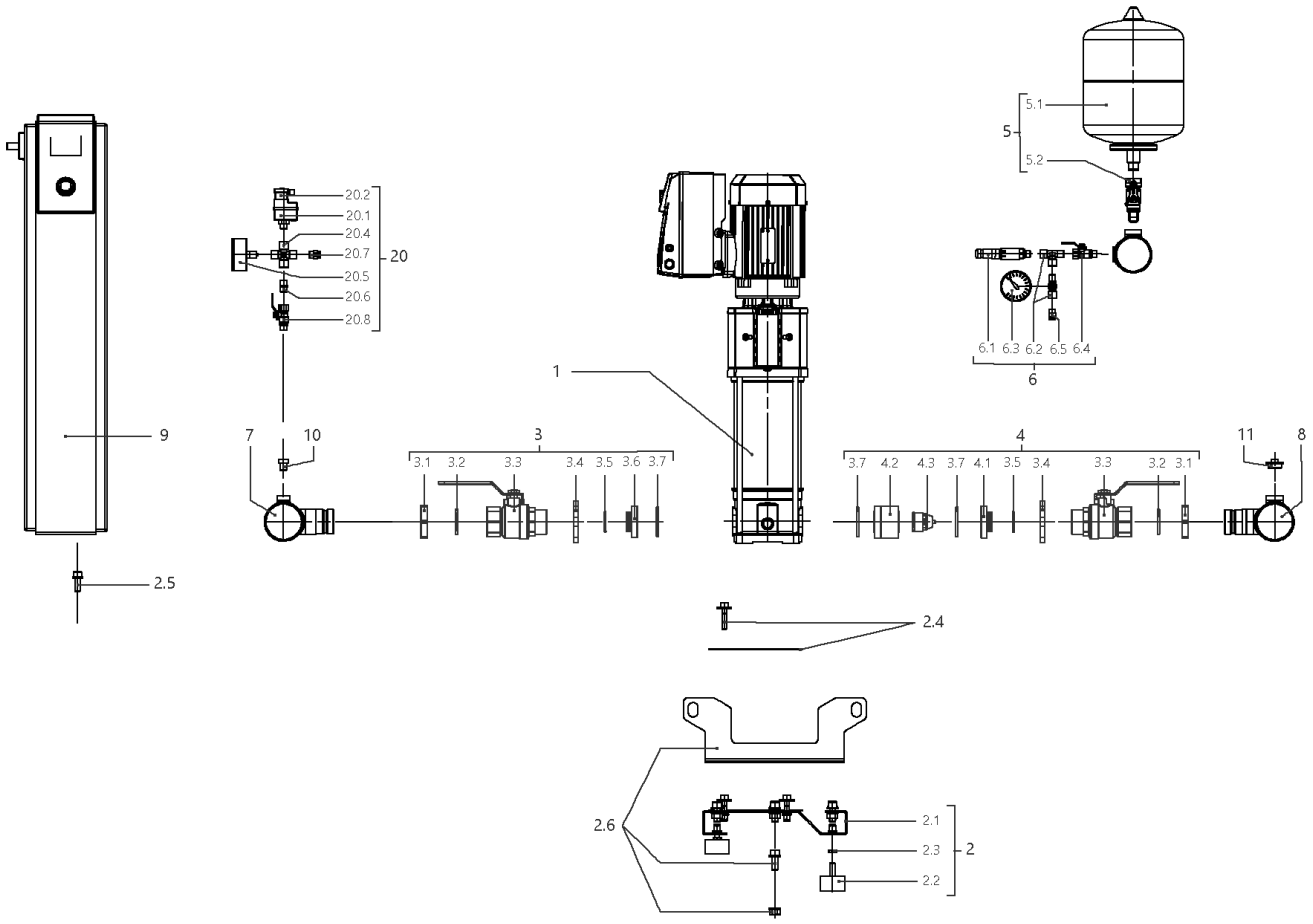
5.1
5
5.2
20.2
20.1
20.4
20.7
20
20.5
20.6
20.8
6.1 6.3 6.2 6.5 6.4
6
1
9
7
10
3
3.1 3.2 3.3 3.4 3.5 3.6 3.7
4
3.7 4.2 4.3 3.7 4.1 3.5 3.4 3.3 3.2 3.1
11
8
2.5
2.4
2.6
2.1
2.3
2
2.2

## SiBoost Smart 3HELIX VE407 (2537339)

| Item | Article no. | Description | Quantity |
|---|---|---|---|
| 1 | | HELIX VE407-1/16/E/S | 1 |
| Note: TO / BIS / JUSQU'AU 31/03/2016 | | | |
| 1 | 4201573 | HELIX VE407-1/16/E/S | 1 |
| Note: FROM / AB / À PARTIR DU 01/04/2016 | | | |
| 2 | 4200137 | BASE PLATE DE3 1150x300 M10 KIT | 1 |
| 2.1 | | > BASEPLATE_3x4/6/10V_E300_1150x300BOX_150 | 1 |
| 2.2 | 2028654 | > VIBRATION DAMPER D.50X30 M10X28 | 1 |
| 2.3 | 2028281 | > NUT M10 DIN936 (ISO4035) 17H VZ | 1 |
| 2.4 | 4199875 | > HOLDER PUMP Siboost Helix V2/4 KIT | 1 |
| 2.5 | 4197084 | > HOLDER SWITCHBOX WILO Smart Control KIT | 1 |
| 2.6 | 4197085 | > LIFTING Siboost HELIX SC KIT | 1 |
| 3 | 4199876 | SUCTION SIDE Siboost Helix V2/4/6 KIT | 1 |
| 3.1 | 2032610 | > NUT G11/4 MS VP. | 1 |
| 3.2 | 2032611 | > O-RING ID.36,09X3,53N DIN3771 E7502 | 1 |
| 3.3 | 2507646 | > BALL VALVE G11/4"M-F-W.HANDLE 1/4-TURN | 1 |
| 3.4 | 2032613 | > SCREWED FLANGE G1 1/4" LK-75 ST37VZ | 1 |
| 3.5 | 2032614 | > O-RING ID.29,82X2,62N DIN3771 E7502 | 1 |
| 3.6 | 2032615 | > SPACER F.I/A KUH.DN32 CUZN | 1 |
| 3.7 | 2032616 | > O-RING ID.44X3,53N DIN3771 E7502 | 1 |
| 4 | 4199877 | DELIVERY SIDE Siboost Helix V2/4/6 KIT | 1 |
| 3.1 | 2032610 | > NUT G11/4 MS VP. | 1 |
| 3.2 | 2032611 | > O-RING ID.36,09X3,53N DIN3771 E7502 | 1 |
| 3.3 | 2507646 | > BALL VALVE G11/4"M-F-W.HANDLE 1/4-TURN | 1 |
| 3.4 | 2032613 | > SCREWED FLANGE G1 1/4" LK-75 ST37VZ | 1 |
| 3.5 | 2032614 | > O-RING ID.29,82X2,62N DIN3771 E7502 | 1 |
| 4.1 | 2058116 | > SPACER F.I/A KUH.DN32 CUZN | 1 |
| 3.7 | 2032616 | > O-RING ID.44X3,53N DIN3771 E7502 | 1 |
| 4.2 | 2058115 | > HOUSING RFV(RV-IN) DN32 SGS/DRS | 1 |
| 4.3 | 2027870 | > NON-RETURN-DEVICE INSERT DN32(MTR) | 1 |
| 5 | 2032642 | DIAPHREM TANK 8L/PN16 DIN4807/T5 KIT | 1 |
| 5.1 | 2045914 | > DIAPHREM TANK 8L TYP-DD 16BAR | 1 |
| 5.2 | 2027853 | > FLOW FITTING G3/4 FOR DIAPHRAGM VES. | 1 |
| 6 | 4197076 | PRESSURE SENSOR/ GAUGE 0-16BAR KIT | 1 |
| 6.1 | 2085909 | > PRESS.SENSOR 1/4" 0-16BAR 4-20MA VP. | 1 |

| Item | Article no. | Description | Quantity |
|---|---|---|---|
| 6.2 | 4197077 | > T-PIECE 1/4" VP. | 1 |
| 6.3 | 2028692 | > PRESSURE GAUGE NG63-PN16-G1/4 | 1 |
| 6.4 | 2028291 | > BALL TAP R1/4" PN42 GIACOMINI R254DL | 1 |
| 6.5 | 2028691 | > BLOWGUN 1/4" MS 30BAR VP. | 1 |
| 7 | 4200138 | PIPE DE3 2''-3x11/4"+2x1/4x900 VP. | 1 |
| 8 | 4200139 | PIPE DE3 2''-3x11/4"+2x1/4+1x3/4x900 VP. | 1 |
| 9 | | W-CTRL-SCE-B-3x0,55-1,5KW-T4-FM-ND1 | 1 |
| Note: TO / BIS / JUSQU'AU 18/05/2014 | | | |
| 9 | 2541914 | W-CTRL-SCE-B-3x10A-T34-FM-ND1-AVC-PKG | 1 |
| Note: FROM / AB / À PARTIR DU 19/05/2014 | | | |
| 10 | 4197079 | PLUG G1/4"x10 AISI304 KIT | 1 |
| 11 | 2032654 | PLUG R3/4" MS VIEGA 1751 | 1 |
| 20 | 2521150 | ASSEMBLY WMS. DE-EB. +VP | 1 |
| 20.1 | 2028652 | > PRESSURE SWITCH PS3-ASR 1/(1,3) VP. | 1 |
| 20.2 | 2130983 | > PLUG PS3-415 WITH KABEL 1,5M 2NO VP. | 1 |
| 20.4 | 2028290 | > CROSSPIECE R1/4" MS-NICKEL | 1 |
| 20.5 | 2028687 | > PRESSURE GAUGE NG63 R1/4" HI.0-6BAR | 1 |
| 20.6 | 2054268 | > DUAL NIPPLE G1/4" x G1/4" MS VP. | 1 |
| 20.7 | 2028691 | > BLOWGUN 1/4" MS 30BAR VP. | 1 |
| 20.8 | 2028291 | > BALL TAP R1/4" PN42 GIACOMINI R254DL | 1 |

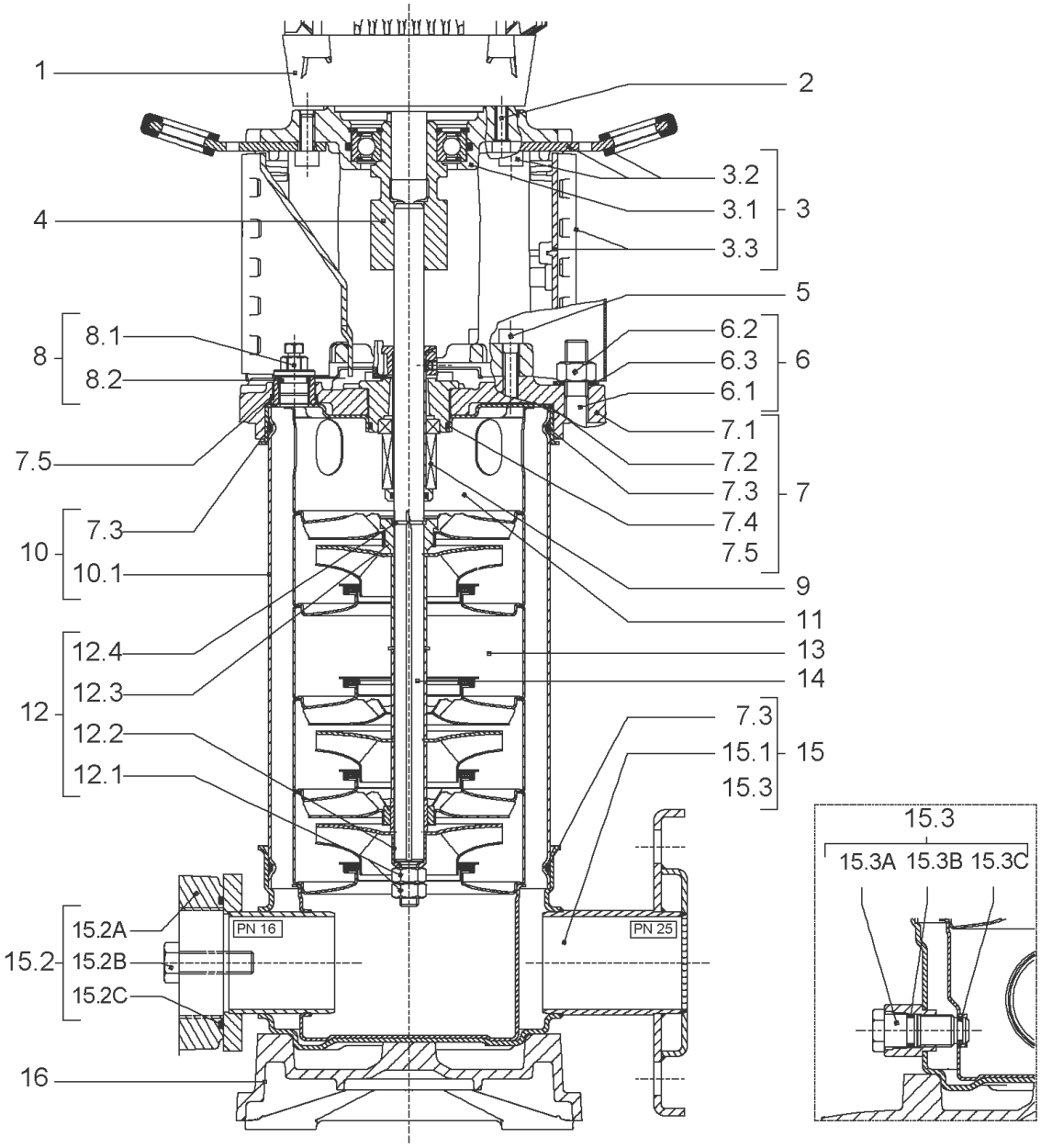
1
2
3.2
3.1
3
3.3
4
5
8.1
8
8.2
6.2
6.3
6
6.1
7.1
7.5
7.2
7.3
7
7.4
7.3
10
7.5
10.1
9
11
12.4
13
12.3
14
12
12.2
7.3
15.1
15
12.1
15.3
15.3
15.3A 15.3B 15.3C
15.2A
PN 16
PN 25
15.2
15.2B
15.2C
16

| Item | Article no. | Description | Quantity |
|---|---|---|---|
| 1 | | DRIVE HELIX-VE407-IE2-WE KIT | 1 |
| Note: MOTOR BRAND WILO ELEC | | | |
| 1 | | DRIVE HELIX-VE407-IE4-WE KIT | 1 |
| Note: MOTOR BRAND WILO ELEC | | | |
| 2 | 4159703 | SCREW M8X40 (4 PIECES) | 1 |
| 3 | 4172795 | LANTERNE FT115 HELIX KIT | 1 |
| 3.1 | | > M+5_6_LANTERN_ONE-PIECE_FT115_CATA | 1 |
| 3.2 | 2127604 | > EYELET CPL.FT HELIX(2 PIECES) | 1 |
| 3.3 | 4159692 | > COUPLING PROTECTOR FT HELIX KIT | 1 |
| 4 | 4178600 | COUPLING D.12XD.24 FT115 KIT | 1 |
| 5 | 4159707 | SCREW M8X30 (4 PIECES) | 1 |
| 6 | 4178585 | STUD BOLT M12X365 KIT | 1 |
| 6.1 | | > TIE BOLT M12-365x18x30-1.4057 | 1 |
| 6.2 | 2094647 | > NUT M12 M12 ISO4032 VP. | 1 |
| 6.3 | 2123557 | > WASHER CS-12.4-24-1.6-NFE25 (4 PIECES) | 1 |
| 7 | 4210143 | STATIONARY RING HOLDER HELIX 6" EPDM | 1 |
| 7.2 | 2127607 | > STATIONARY RING HOLDER 6" HELIX 1.4301 V | 1 |
| 7.3 | 4176513 | > O-RING FOR PUMP JACKET VP. | 1 |
| 7.4 | 2127603 | > O-RING ID.37,6x2,4 EPDM VP. | 1 |
| 7.5 | 2127602 | > O-RING ID.21,35x2 EPDM VP. | 1 |
| 8 | 4159686 | FILING/PURGING PLUG HELIX EPDM KIT | 1 |
| 9 | 4178564 | SEAL-KIT-HELIX2-4 O/E KIT | 1 |
| 10 | 4178586 | HOUSING-PIPE D.152X235 1.4301 KIT | 1 |
| 7.3 | 4176513 | > O-RING FOR PUMP JACKET VP. | 1 |
| 10.1 | | > HOUSING-PIPE Ø152-M+207/407-304 | 1 |
| 11 | 4178566 | CENTERING STAGE-RETURN HELIX4 1.4307 VP | 1 |
| 12 | 4178568 | SHAFT EQUIPMENT HELIX V2/V4 KIT | 1 |
| 12.1 | | > NUT-H-M8-STAINLESS-STEEL A4-70 | 2 |
| 12.2 | | > SHAFT END WASHER Ø8/Ø12 316L | 1 |
| 12.3 | | > STOP COLLAR OF IMPELLER M+2/4 SINGLEBLOC | 1 |
| 12.4 | | > STOP-RUSH-1/2-D12xd2-M+316 | 2 |
| 13 | | HYDRAULIC HELIX V 407 1.4307 | 1 |
| 14 | 4178587 | SHAFT D.12X358 1.4301 VP. | 1 |
| 15 | 4174079 | PUMP HOUSING HELIX DN32 PN16 1.4301 KIT | 1 |

| Item | Article no. | Description | Quantity |
|---|---|---|---|
| 7.3 | 4176513 | > O-RING FOR PUMP JACKET VP. | 1 |
| 15.1 | | > BLASTING PPE HOUSING V-PN16-DN32-5"-304 | 1 |
| 15.2 | 4217889 | > COUNTER FLANGE-G1"-PN16-GJL KIT | 1 |
| 15.3 | 4171321 | > PRIMING/DRAIN PLUG EPDM HELIX KIT | 1 |
| 16 | 4177964 | BASEPLATE HELIX V2/4/6 PN16 VP. | 1 |

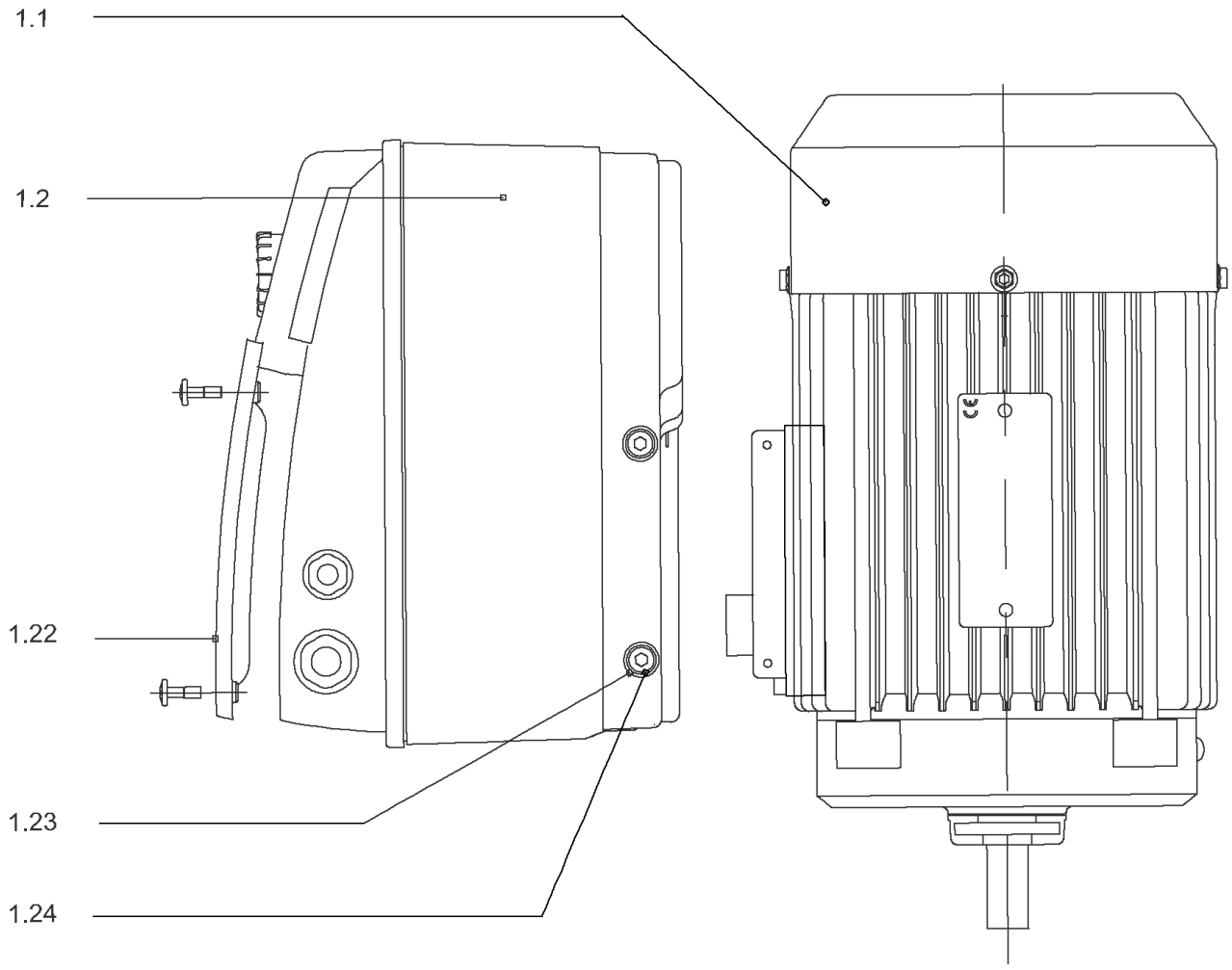
1.1
1.2
1.22
1.23
1.24

## DRIVE HELIX-VE407-IE2-WE KIT

| Item | Article no. | Description | Quantity |
|---|---|---|---|
| 1.1 | | MOTOR 1,5/2/90 3~ 380V 60HZ IE2 WE VP. | 1 |
| Note: no longer available/nicht mehrlieferbar/n'est plus disponible | | | |
| | | SPARE PARTS MOTOR:ON REQUEST | 1 |
| 1.2 | 4184872 | MODULE HELIX-VE407-IE2-WE KIT | 1 |
| 1.22 | 2054227 | > MODULE COVER/GASKET TL3/4 KIT | 1 |
| 1.23 | 4215716 | > SCREW M5X16 DIN912 8.8 A2A (4pieces) VP. | 1 |
| 1.24 | 2057978 | > RONDELLE A5,3 DIN6797 FST ZN (4 PIECES) | 1 |

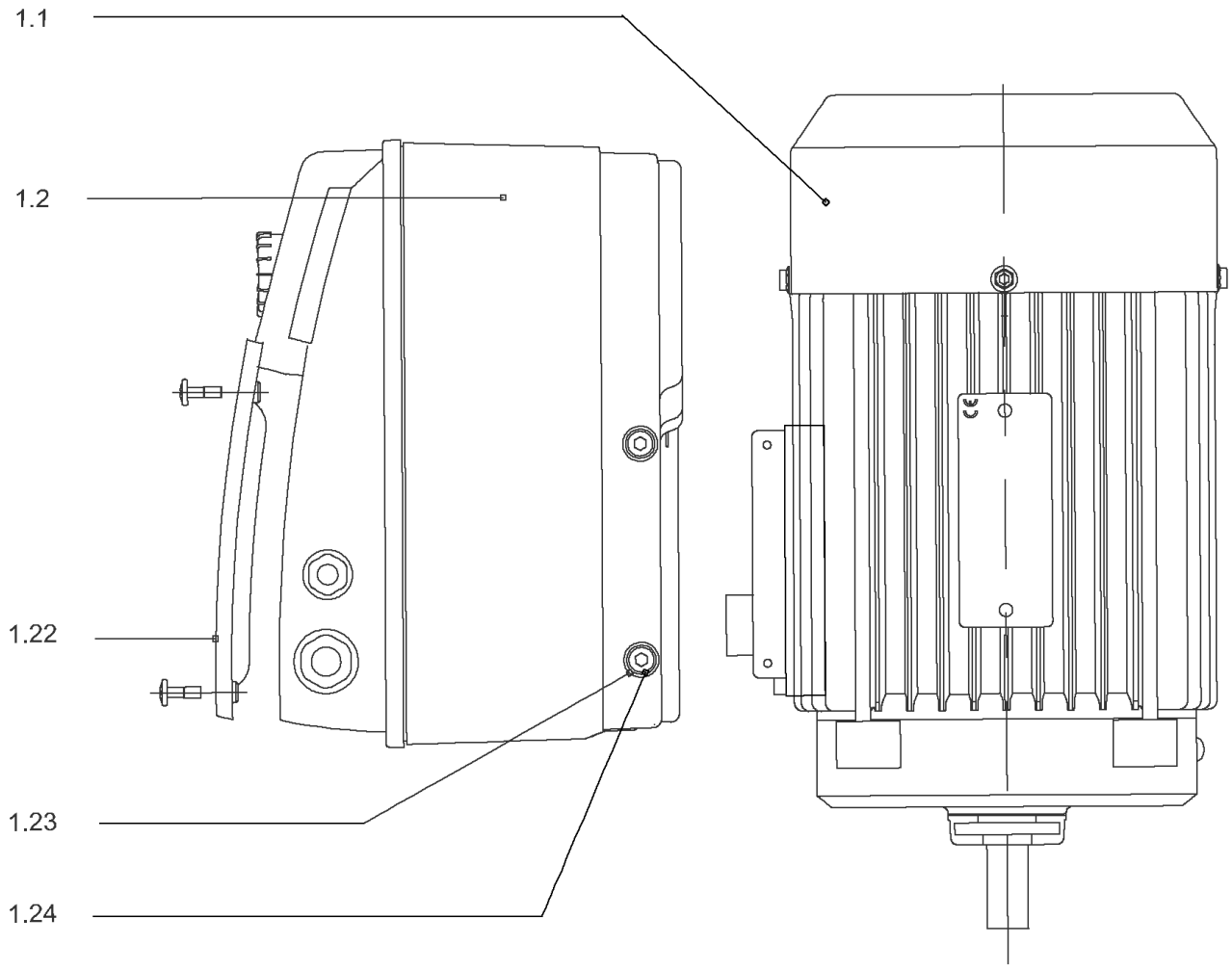
1.1
1.2
1.22
1.23
1.24

## DRIVE HELIX-VE407-IE4-WE KIT

| Item | Article no. | Description | Quantity |
|---|---|---|---|
| 1.1 | 4207918 | MOTOR 1.5/2/90 3~ 380V 60HZ IE4 WE VP. | 1 |
| | | SPARE PARTS MOTOR:ON REQUEST | 1 |
| 1.2 | 4209326 | MODULE HELIX-VE407-IE4-WE KIT | 1 |
| 1.22 | 2054227 | > MODULE COVER/GASKET TL3/4 KIT | 1 |
| 1.23 | 4215716 | > SCREW M5X16 DIN912 8.8 A2A (4pieces) VP. | 1 |
| 1.24 | 2057978 | > RONDELLE A5,3 DIN6797 FST ZN (4 PIECES) | 1 |

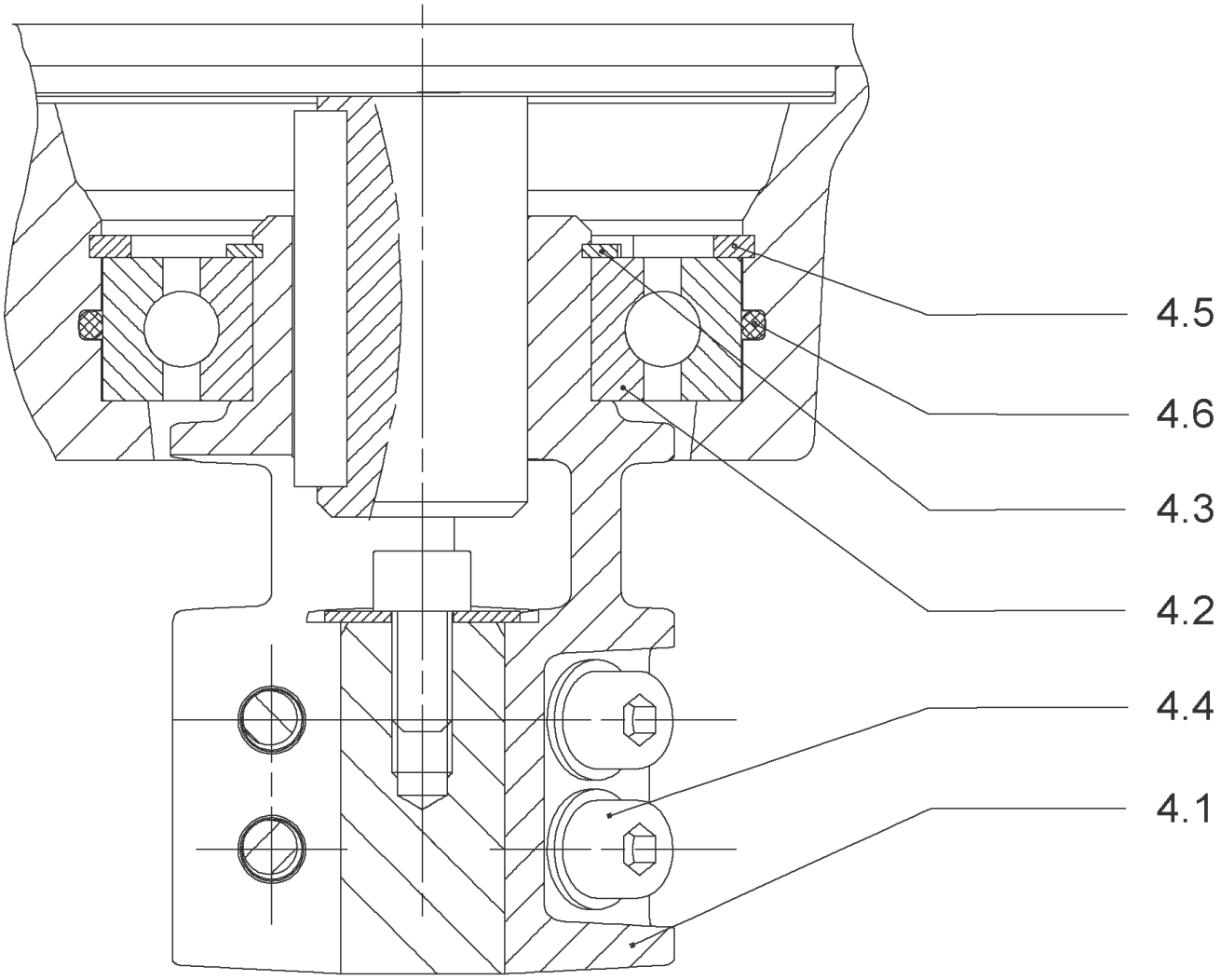
4.5
4.6
4.3
4.2
4.4
4.1

## COUPLING D.12XD.24 FT115 KIT (4178600)

| Item | Article no. | Description | Quantity |
|---|---|---|---|
| 4.1 | | COUPLING-M+ Ø12XØ24-FT115-MACHINED | 1 |
| 4.2 | 2131023 | BALL BEARING 6207/ZZ-C3(HT)VP. | 1 |
| 4.3 | 4234254 | CIRCLIP-FOR-SHAFT-D35x1.5 VP. | 1 |
| 4.4 | 4157726 | SCREW KIT M8X30 (4 PIECES) | 1 |
| 4.5 | 4234251 | CIRCLIP-D72x2.5 VP. | 1 |
| 4.6 | 4234246 | O-RING 72X3 VP. | 1 |
| | | NOMEL CONTACT WASHER 8x16x1,4 STEEL ZC | 1 |

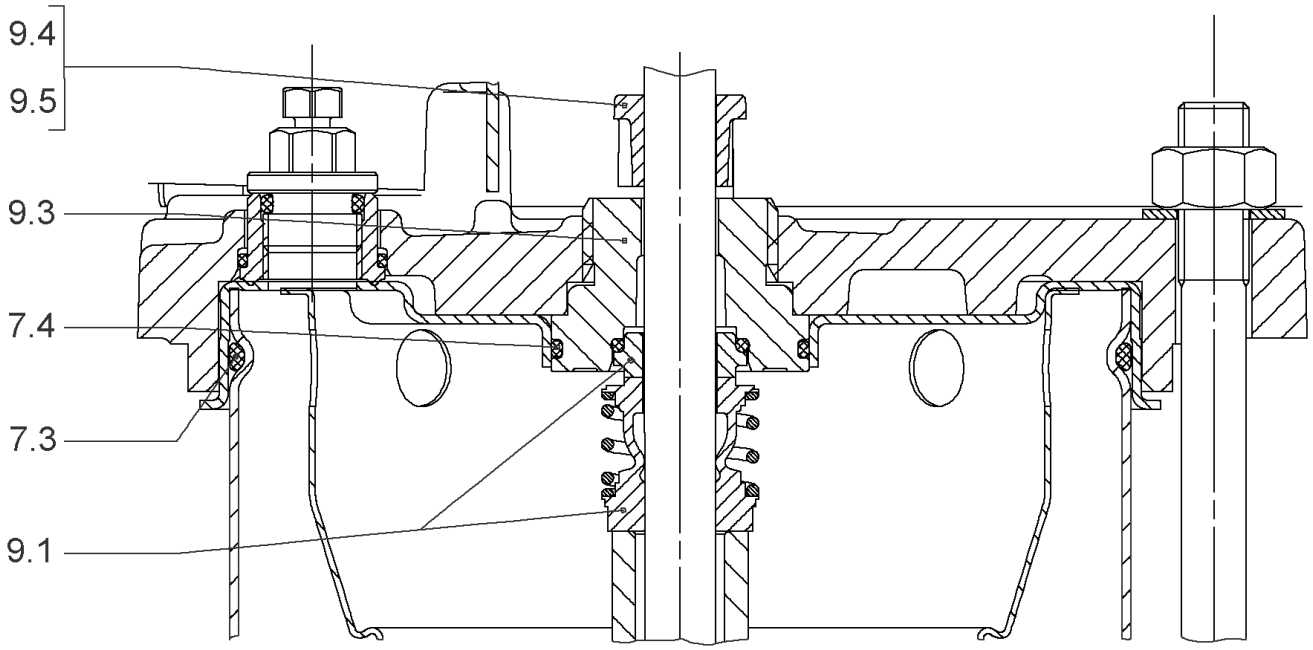
9.4
9.5
9.3
7.4
7.3
9.1

## SEAL-KIT-HELIX2-4 O/E KIT (4178564)

| Item | Article no. | Description | Quantity |
|---|---|---|---|
| 7.3 | 4176513 | O-RING FOR PUMP JACKET VP. | 1 |
| 7.4 | 2127603 | O-RING ID.37,6x2,4 EPDM VP. | 1 |
| 9.1 | 4178563 | M.SEAL.HELIX2-4 O/E VP. | 1 |
| 9.3 | 4178561 | RING HOLDER Ø22 1.4301 VP. | 1 |
| 9.5 | 4178562 | DRIVE RING D.22/12.2X10 MACH.VP. | 1 |
| 9.4 | 4176520 | SCREW CH M5x5 A4-70 ( 3PIECES ) | 1 |

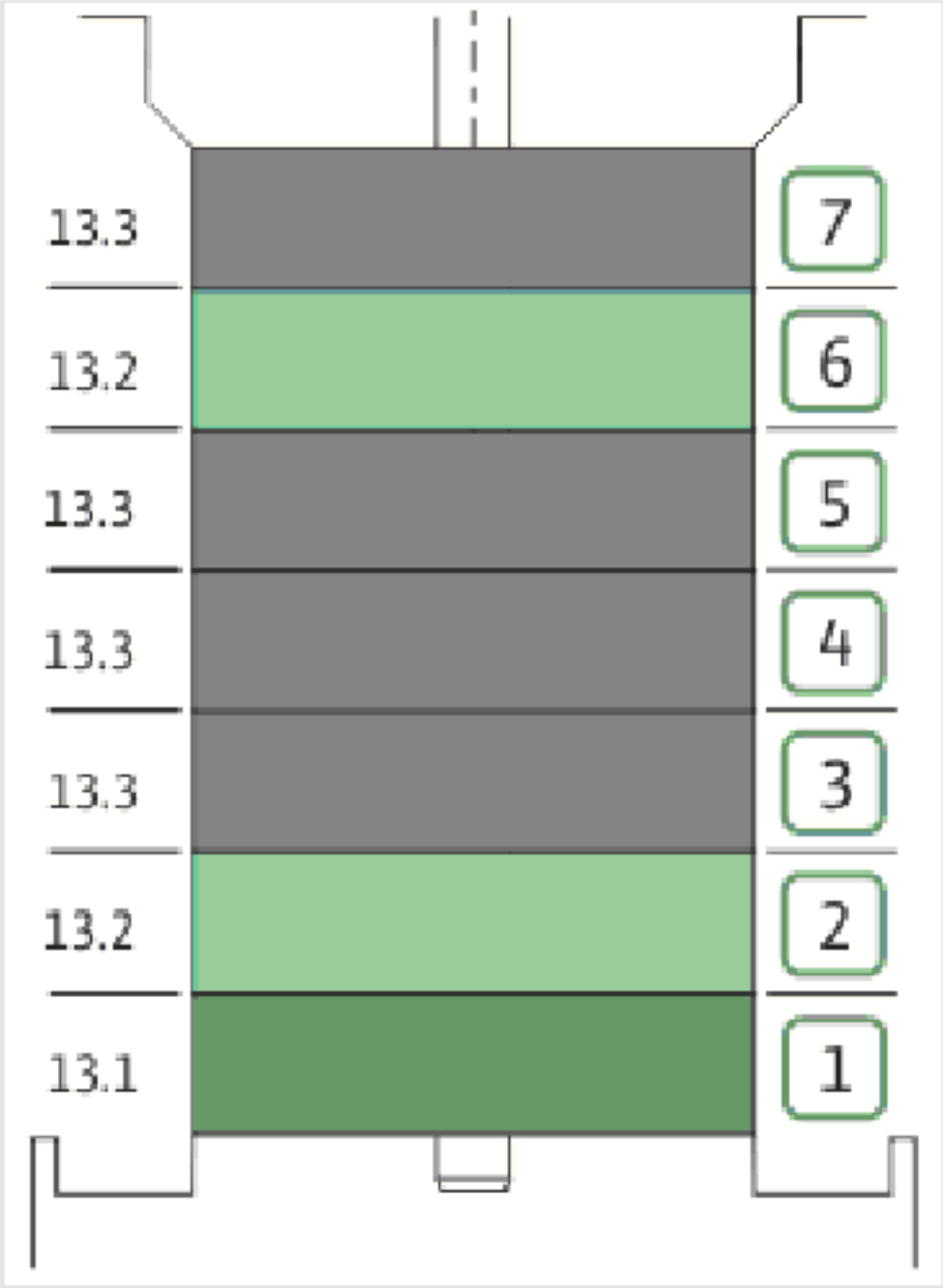
13.3
13.2
13.3
13.3
13.3
13.2
13.1
7
6
5
4
3
2
1

| Item | Article no. | Description | Quantity |
|---|---|---|---|
| 13.1 | 4178570 | STAGE HELIX 4 1.4301 KIT | 1 |
| | | > MACH.STG-CASING-WOGV-WNR-M+2-4-304 | 1 |
| | | > IMPELLER-M+4-304 | 1 |
| 13.2 | 4178569 | STAGE BEARING HELIX 4 1.4301 KIT | 1 |
| | | > MACH.BEARING-STG-CASING-WNR-M+4-304 | 1 |
| | | > IMPELLER-M+4-304 | 1 |
| | | > SHAFT SLEEVE SPACER Ø15,35x10,305-304 | 1 |
| | | > SHAFT-SLEEVE-D12xD16x14-CW | 1 |
| 13.3 | 4178574 | INTER STAGE HELIX4 1.4301< 15 stages KIT | 1 |
| | | > MACH.STD-STG-CASING-WGV+NR-M+4-304 | 1 |
| | | > IMPELLER-M+4-304 | 1 |
| | | > IMPELLER SPACER Ø12,05X14,85-L24,285-304 | 1 |

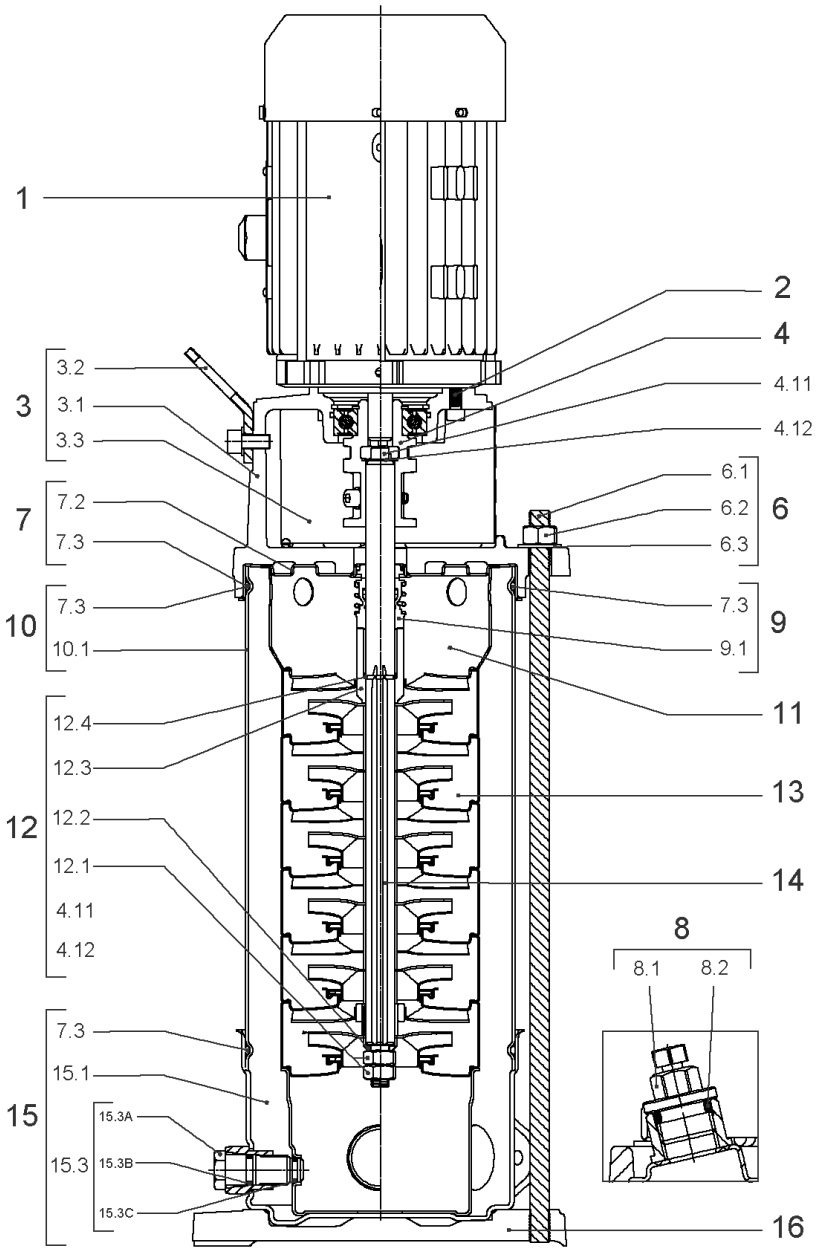
1
2
4
4.11
4.12
3
3.2
3.1
3.3
7
7.2
7.3
10
7.3
10.1
6
6.1
6.2
6.3
9
7.3
9.1
11
12
12.4
12.3
12.2
12.1
4.11
4.12
13
14
8
8.1
8.2
15
7.3
15.1
15.3
15.3A
15.3B
15.3C
16

## HELIX VE407-1/16/E/S (4201573)

| Item | Article no. | Description | Quantity |
|---|---|---|---|
| 1 | | DRIVE HELIX-VE407-IE4-WE KIT | 1 |
| Note: MOTOR BRAND WILO ELEC | | | |
| | | SPARE PARTS MOTOR:ON REQUEST | 1 |
| 2 | 4159707 | SCREW M8X30 (4 PIECES) | 1 |
| 3 | 4213784 | LANTERN FT115 HELIX KIT | 1 |
| 3.1 | | > LANT-MOT-VMI-ReDTC6"-FT115-MACHINED+CATA | 1 |
| 3.2 | 4184852 | > EYELET CPL.FT HELIX (2 PIECES) | 1 |
| 3.3 | 4213782 | > COUPLING PROTECTOR FT115/130 HELIX KIT | 1 |
| 4 | 4178600 | COUPLING D.12XD.24 FT115 KIT | 1 |
| 6 | 4178585 | STUD BOLT M12X365 KIT | 1 |
| 6.1 | | > TIE BOLT M12-365x18x30-1.4057 | 1 |
| 6.2 | 2094647 | > NUT M12 M12 ISO4032 VP. | 1 |
| 6.3 | 2123557 | > WASHER CS-12.4-24-1.6-NFE25 (4 PIECES) | 1 |
| 7 | 4212722 | STATIONARY RING HOLDER HELIX D23 ReDTC | 1 |
| 7.2 | 4212720 | > STATIONARY RING HOLDER HELIX D23 VP. | 1 |
| 7.3 | 4176513 | > O-RING FOR PUMP JACKET VP. | 1 |
| 8 | 4212724 | FILING/PURGING PLUG HELIX ReDTC KIT | 1 |
| 8.1 | | > FILLING PLUG MVI6"-304 | 1 |
| 8.2 | 4177800 | > O-RING EPDM PLUG HELIX VP. | 1 |
| 9 | 4212726 | MECH.SEAL HELIX V2/4 O/E ReDTC KIT | 1 |
| 9.1 | 4178563 | > M.SEAL.HELIX2-4 O/E VP. | 1 |
| 7.3 | 4176513 | > O-RING FOR PUMP JACKET VP. | 1 |
| 10 | 4178586 | HOUSING-PIPE D.152X235 1.4301 KIT | 1 |
| 7.3 | 4176513 | > O-RING FOR PUMP JACKET VP. | 1 |
| 10.1 | | > HOUSING-PIPE Ø152-M+207/407-304 | 1 |
| 11 | 4178566 | CENTERING STAGE-RETURN HELIX4 1.4307 VP | 1 |
| 12 | 4212729 | SHAFT EQUIPMENT HELIX V2/4 ReDTC KIT | 1 |
| 12.1 | | > NUT-H-M8-STAINLESS-STEEL A4-70 | 1 |
| 12.2 | | > SHAFT END WASHER Ø8/Ø12 316L | 1 |
| 12.3 | | > 1/2-SNAP-RING-2/4M3-316L | 1 |
| 12.4 | | > STOP-RUSH-1/2-D12xd2-M+316 | 1 |
| 4.11 | | > SCREW CHC-M6X14-8.8-ISO4762-GEOMET500A | 1 |
| 4.12 | | > WASHER D.24 L6U ZINK | 1 |
| 13 | | HYDRAULIC HELIX V 407 1.4307 | 1 |

| Item | Article no. | Description | Quantity |
|---|---|---|---|
| 14 | 4213750 | SHAFT D.12X306 HELIX 1.4057 VP. | 1 |
| 15 | 4174079 | PUMP HOUSING HELIX DN32 PN16 1.4301 KIT | 1 |
| 7.3 | 4176513 | > O-RING FOR PUMP JACKET VP. | 1 |
| 15.1 | | > BLASTING PPE HOUSING V-PN16-DN32-5"-304 | 1 |
| 15.2 | 4217889 | > COUNTER FLANGE-G1"-PN16-GJL KIT | 1 |
| 15.3 | 4171321 | > PRIMING/DRAIN PLUG EPDM HELIX KIT | 1 |
| 16 | 4177964 | BASEPLATE HELIX V2/4/6 PN16 VP. | 1 |

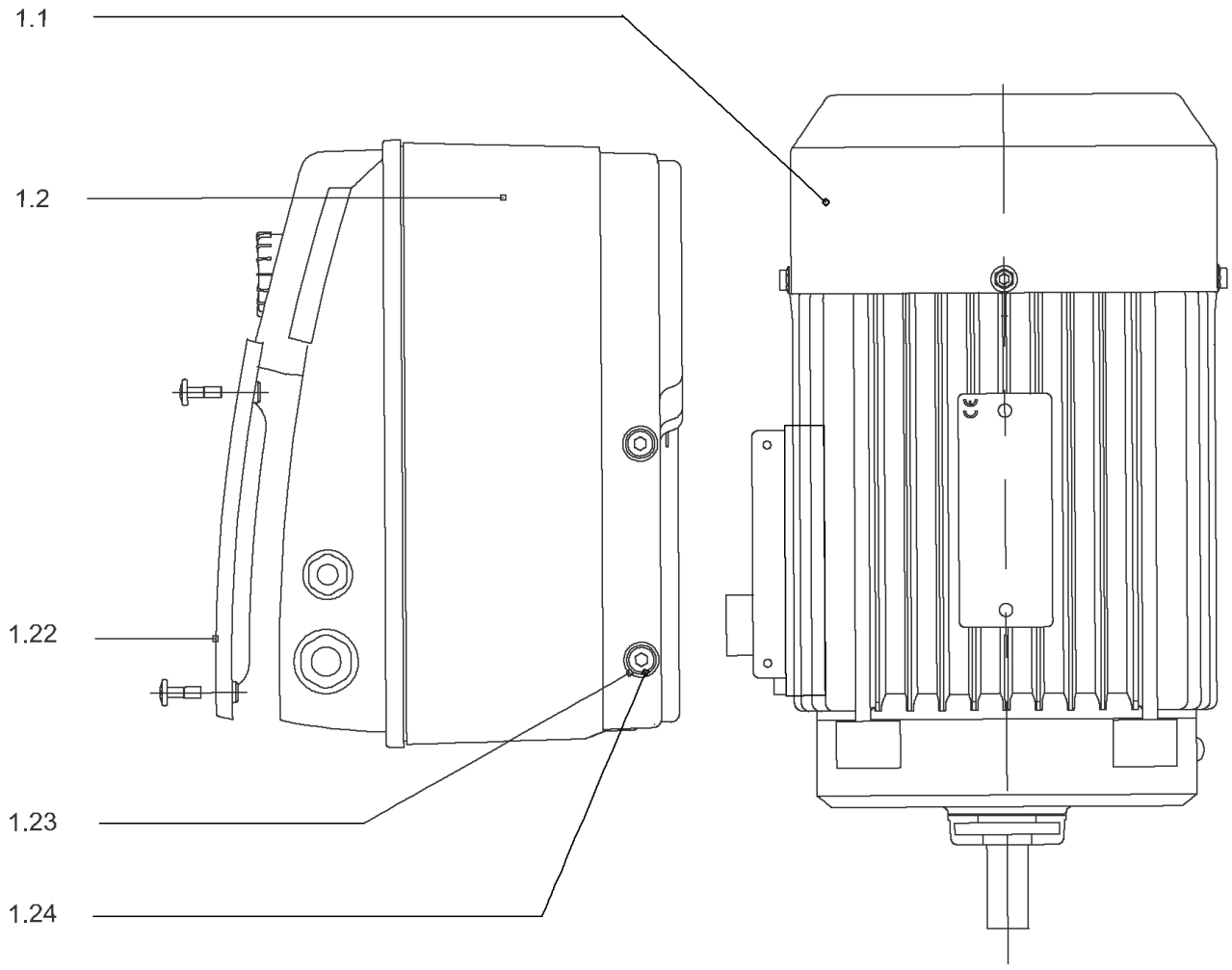
1.1
1.2
1.22
1.23
1.24

## DRIVE HELIX-VE407-IE4-WE KIT

| Item | Article no. | Description | Quantity |
|---|---|---|---|
| 1.1 | 4207918 | MOTOR 1.5/2/90 3~ 380V 60HZ IE4 WE VP. | 1 |
| | | SPARE PARTS MOTOR:ON REQUEST | 1 |
| 1.2 | 4209326 | MODULE HELIX-VE407-IE4-WE KIT | 1 |
| 1.22 | 2054227 | > MODULE COVER/GASKET TL3/4 KIT | 1 |
| 1.23 | 4215716 | > SCREW M5X16 DIN912 8.8 A2A (4pieces) VP. | 1 |
| 1.24 | 2057978 | > RONDELLE A5,3 DIN6797 FST ZN (4 PIECES) | 1 |

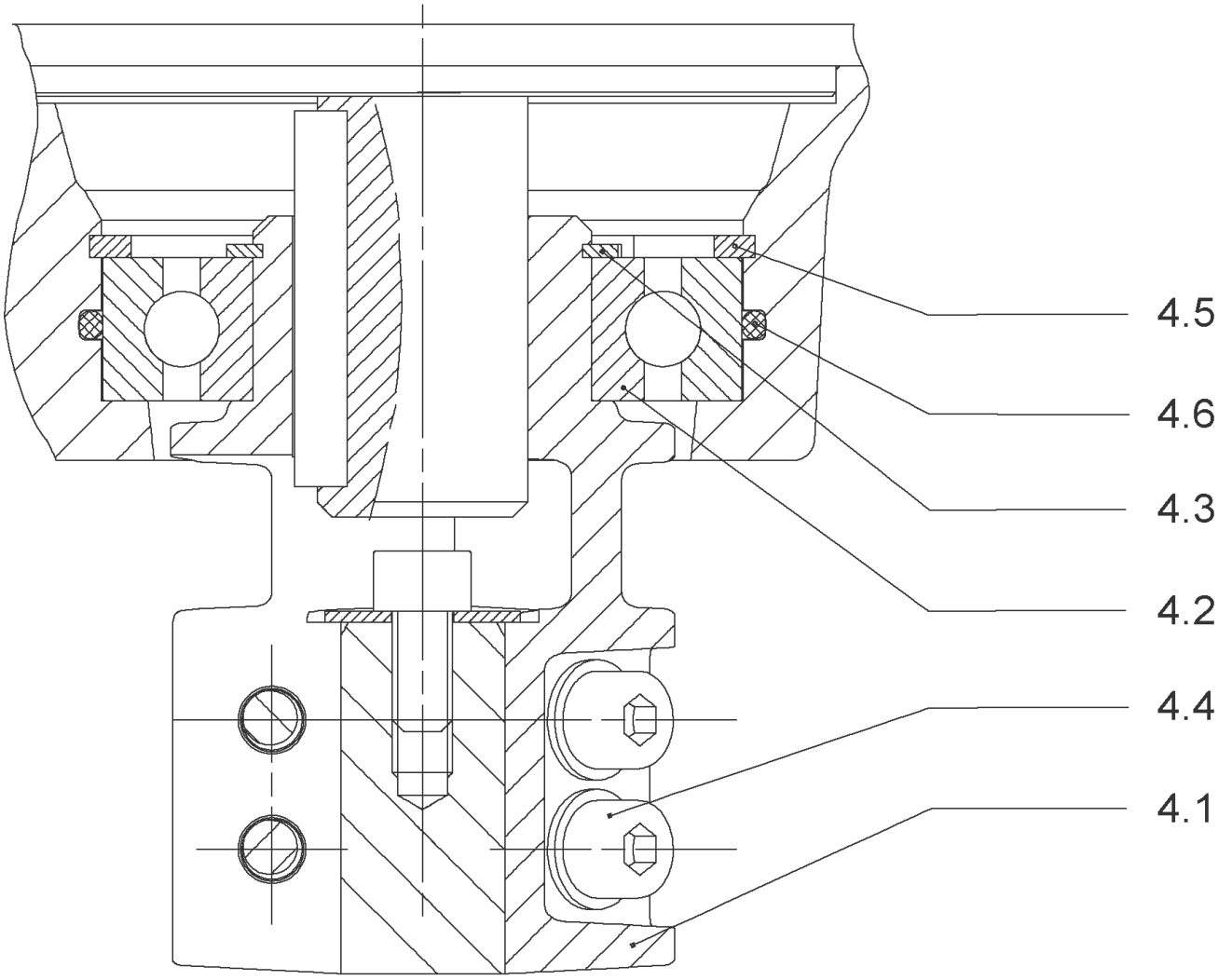
4.5
4.6
4.3
4.2
4.4
4.1

## COUPLING D.12XD.24 FT115 KIT (4178600)

| Item | Article no. | Description | Quantity |
|---|---|---|---|
| 4.1 | | COUPLING-M+ Ø12XØ24-FT115-MACHINED | 1 |
| 4.2 | 2131023 | BALL BEARING 6207/ZZ-C3(HT)VP. | 1 |
| 4.3 | 4234254 | CIRCLIP-FOR-SHAFT-D35x1.5 VP. | 1 |
| 4.4 | 4157726 | SCREW KIT M8X30 (4 PIECES) | 1 |
| 4.5 | 4234251 | CIRCLIP-D72x2.5 VP. | 1 |
| 4.6 | 4234246 | O-RING 72X3 VP. | 1 |
| | | NOMEL CONTACT WASHER 8x16x1,4 STEEL ZC | 1 |

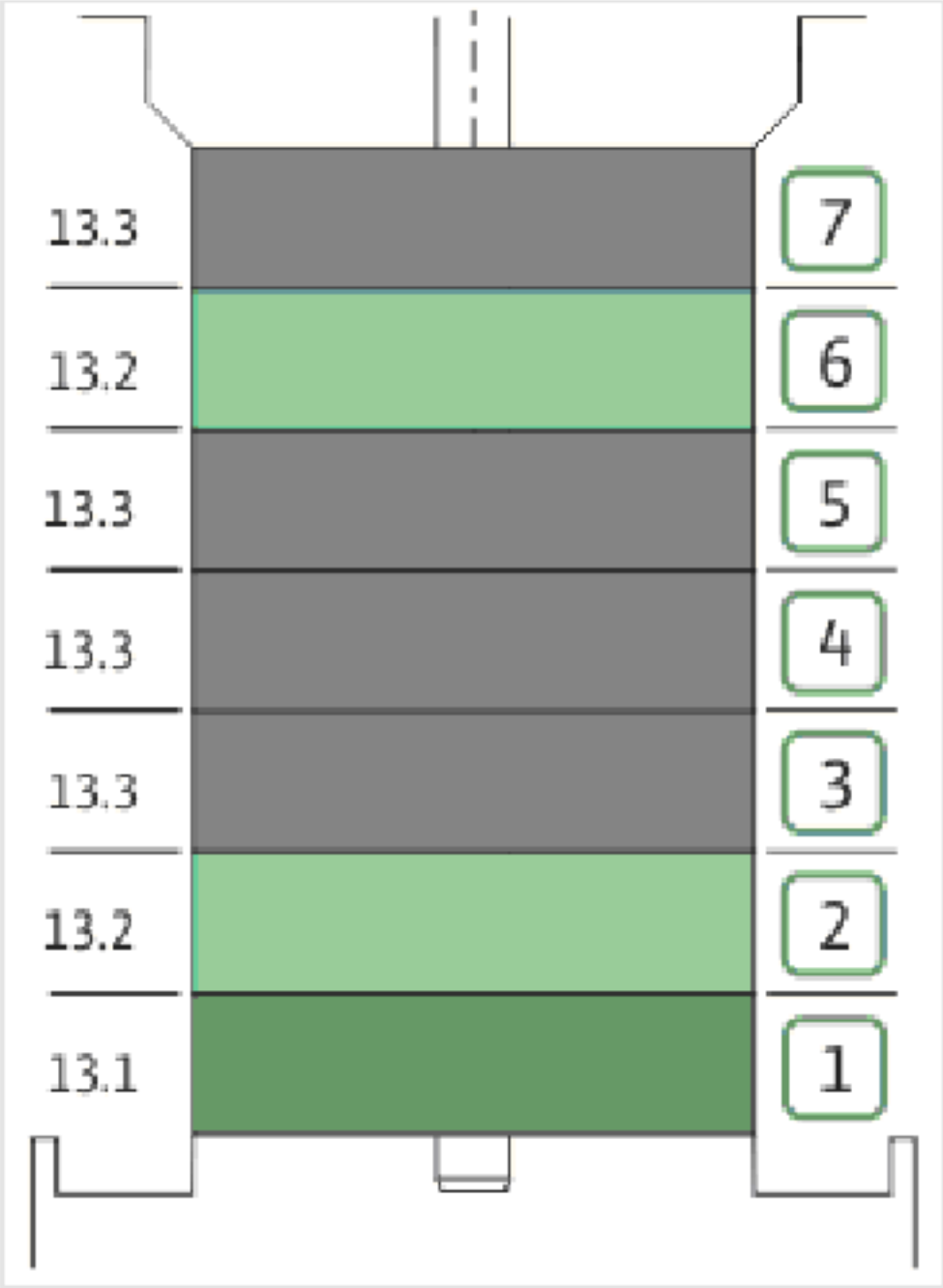
13.3
13.2
13.3
13.3
13.3
13.2
13.1
7
6
5
4
3
2
1

| Item | Article no. | Description | Quantity |
|---|---|---|---|
| 13.1 | 4178570 | STAGE HELIX 4 1.4301 KIT | 1 |
| | | > MACH.STG-CASING-WOGV-WNR-M+2-4-304 | 1 |
| | | > IMPELLER-M+4-304 | 1 |
| 13.2 | 4178569 | STAGE BEARING HELIX 4 1.4301 KIT | 1 |
| | | > MACH.BEARING-STG-CASING-WNR-M+4-304 | 1 |
| | | > IMPELLER-M+4-304 | 1 |
| | | > SHAFT SLEEVE SPACER Ø15,35x10,305-304 | 1 |
| | | > SHAFT-SLEEVE-D12xD16x14-CW | 1 |
| 13.3 | 4178574 | INTER STAGE HELIX4 1.4301< 15 stages KIT | 1 |
| | | > MACH.STD-STG-CASING-WGV+NR-M+4-304 | 1 |
| | | > IMPELLER-M+4-304 | 1 |
| | | > IMPELLER SPACER Ø12,05X14,85-L24,285-304 | 1 |

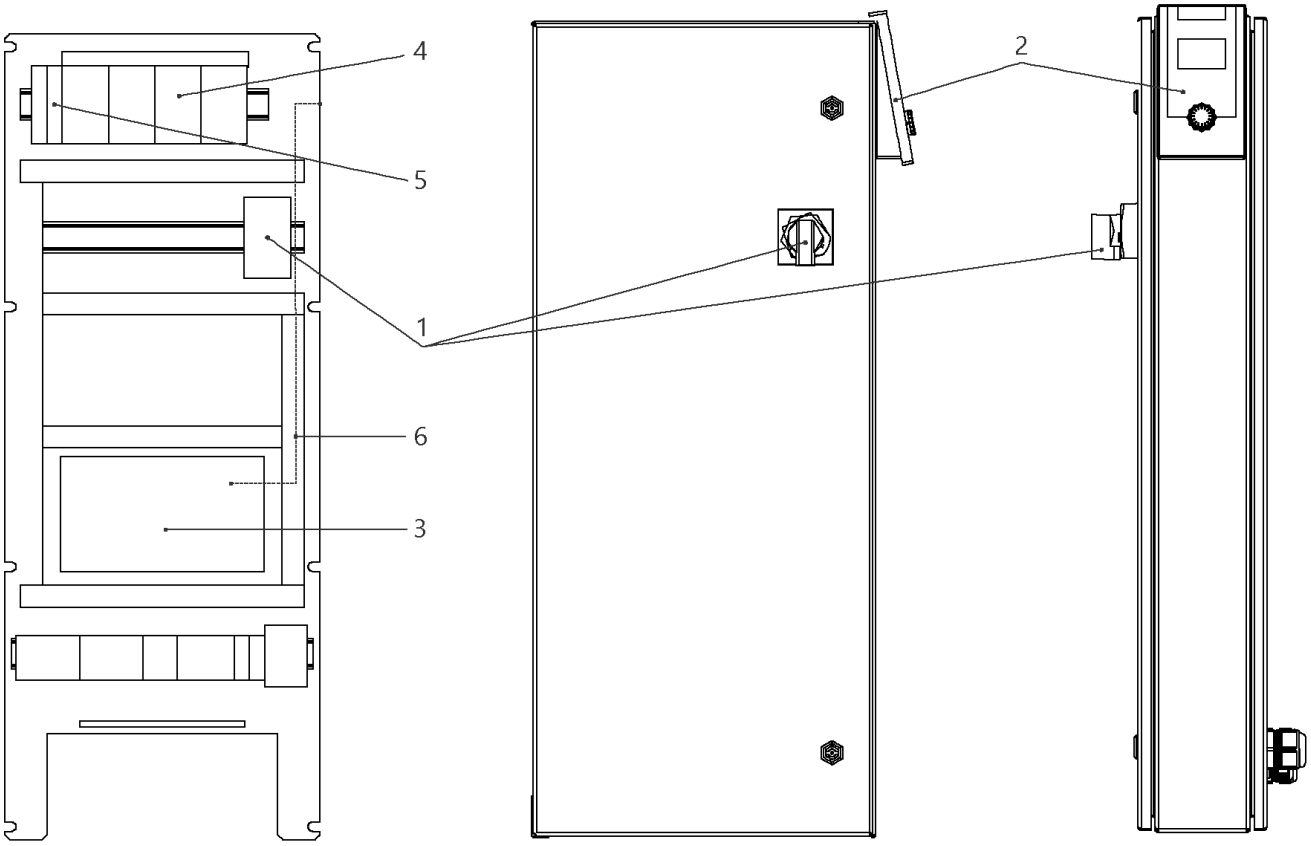
4
5
1
6
3
2

## W-CTRL-SCE-B-3x0,55-1,5KW-T4-FM-ND1

| Item | Article no. | Description | Quantity |
|---|---|---|---|
| 1 | 2104470 | MAIN SWITCH OT40F3 L250 KIT | 1 |
| 2 | 4184784 | CONTROL PANEL HMI SC KIT | 1 |
| 2 | 4185259 | ASSEMBLY DISPLAY SC PKG VP. | 1 |
| 3 | 4185257 | ASSEMBLY CPU SCe Booster VP. | 1 |
| 4 | 2051217 | AUTOM.CIRCUIT BREAKER S203 B16 TO7,5kW | 1 |
| 5 | 2046288 | CIRCUIT BREAKER S201 B16 | 1 |
| 6 | 4197081 | CABLE RJ45 CAT6 0,5M RED SC-PANEL VP. | 1 |

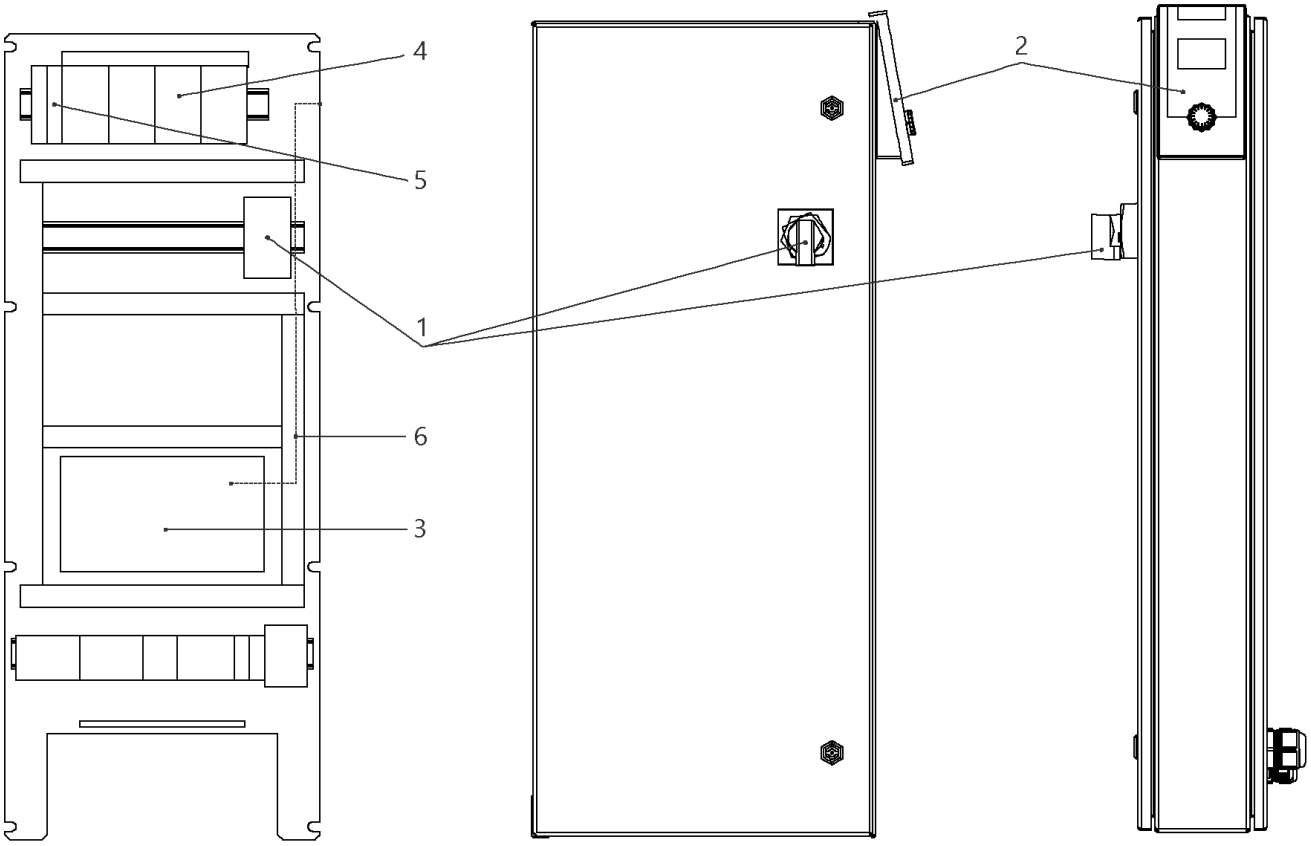
4
5
1
6
3
2

## W-CTRL-SCE-B-3x10A-T34-FM-ND1-AVC-PKG (2541914)

| Item | Article no. | Description | Quantity |
|---|---|---|---|
| 1 | 2104473 | MAIN SWITCH OT63F3 L105 KIT | 1 |
| Note: TO / BIS / JUSQU'AU 30/06/2015 | | | |
| 1 | 2104470 | MAIN SWITCH OT40F3 L250 KIT | 1 |
| Note: FROM / AB / À PARTIR DU 01/07/2015 | | | |
| 2 | 4184784 | CONTROL PANEL HMI SC KIT | 1 |
| 2 | 4185259 | ASSEMBLY DISPLAY SC PKG VP. | 1 |
| Note: DISPLAY ALONE / PLATINE SEULE | | | |
| 3 | 4185257 | ASSEMBLY CPU SCe Booster VP. | 1 |
| 4 | 2119861 | AUTOMATIC CIRCUIT BREAKER S203 B13 3POL. | 1 |
| 5 | 2046288 | CIRCUIT BREAKER S201 B16 | 1 |
| 6 | 4197081 | CABLE RJ45 CAT6 0,5M RED SC-PANEL VP. | 1 |

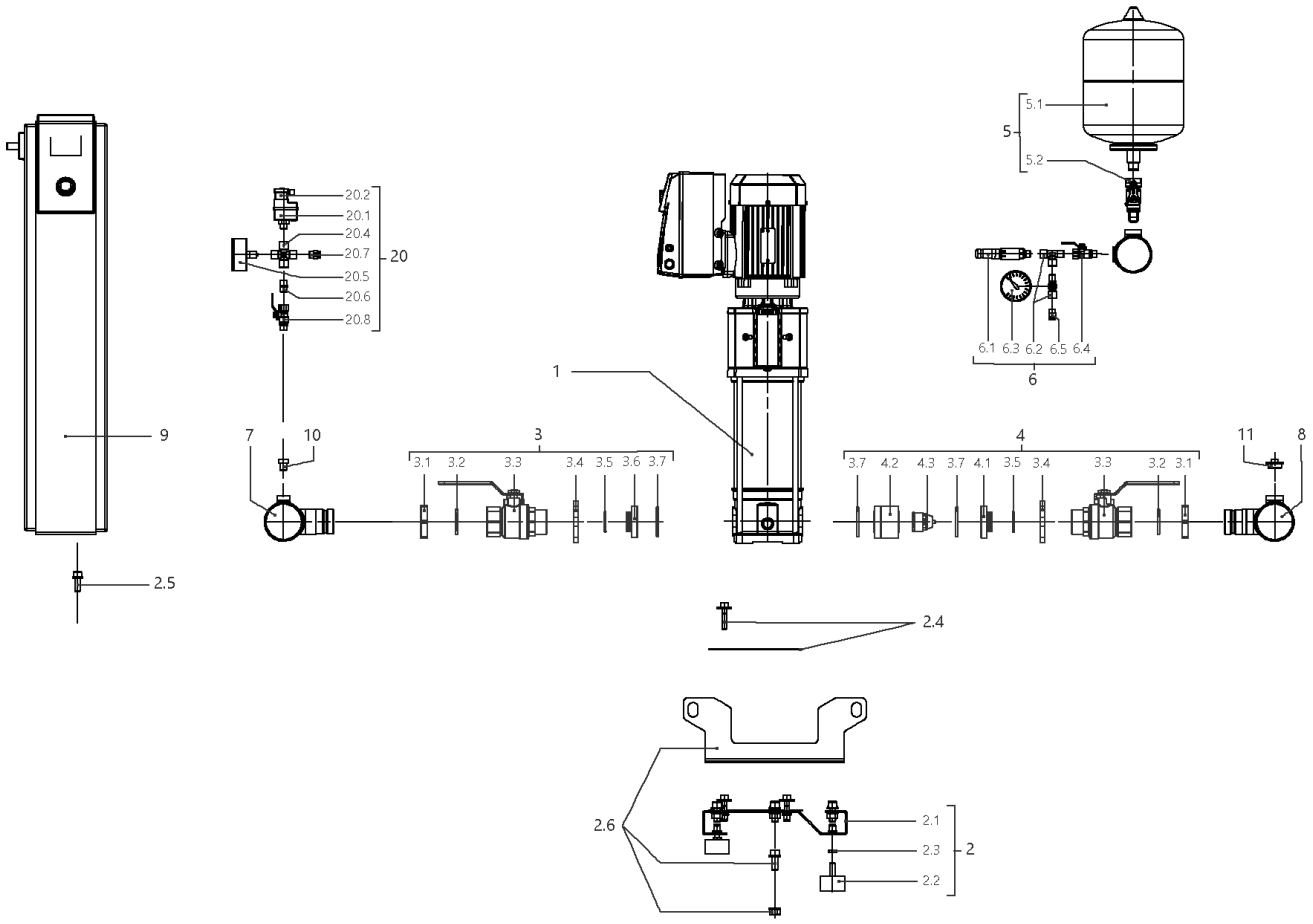
5.1
5
5.2
20.2
20.1
20.4
20.7
20
20.5
20.6
20.8
6.1 6.3 6.2 6.5 6.4
6
1
9
7
10
3
3.1 3.2 3.3 3.4 3.5 3.6 3.7
4
3.7 4.2 4.3 3.7 4.1 3.5 3.4 3.3 3.2 3.1
11
8
2.5
2.4
2.6
2.1
2.3
2
2.2

## SiBoost Smart 3HELIX VE410 (2537623)

| Item | Article no. | Description | Quantity |
|---|---|---|---|
| 1 | | HELIX VE410-1/16/E/S | 1 |
| Note: TO / BIS / JUSQU'AU 31/03/2016 | | | |
| 1 | 4201575 | HELIX VE410-1/16/E/S | 1 |
| Note: FROM / AB / À PARTIR DU 01/04/2016 | | | |
| 2 | 4200142 | BASE PLATE DE3 1150x420 KIT | 1 |
| Note: TO / BIS / JUSQU'AU 28/02/2013 | | | |
| 2.1 | | > BASEPLATE_3x4/6/10/16V_E300_BOX_150 | 1 |
| 2.2 | 2028654 | > VIBRATION DAMPER D.50X30 M10X28 | 1 |
| 2.3 | 2028281 | > NUT M10 DIN936 (ISO4035) 17H VZ | 1 |
| 2.4 | 4199875 | > HOLDER PUMP Siboost Helix V2/4 KIT | 1 |
| 2.5 | 4197084 | > HOLDER SWITCHBOX WILO Smart Control KIT | 1 |
| 2.6 | 4197117 | > LIFTING Siboost HELIX SC KIT | 1 |
| 2 | 4200137 | BASE PLATE DE3 1150x300 M10 KIT | 1 |
| Note: FROM / AB / À PARTIR DU 01/03/2013 | | | |
| 2.1 | | > BASEPLATE_3x4/6/10V_E300_1150x300BOX_150 | 1 |
| 2.2 | 2028654 | > VIBRATION DAMPER D.50X30 M10X28 | 1 |
| 2.3 | 2028281 | > NUT M10 DIN936 (ISO4035) 17H VZ | 1 |
| 2.4 | 4199875 | > HOLDER PUMP Siboost Helix V2/4 KIT | 1 |
| 2.5 | 4197084 | > HOLDER SWITCHBOX WILO Smart Control KIT | 1 |
| 2.6 | 4197085 | > LIFTING Siboost HELIX SC KIT | 1 |
| 3 | 4199876 | SUCTION SIDE Siboost Helix V2/4/6 KIT | 1 |
| 3.1 | 2032610 | > NUT G11/4 MS VP. | 1 |
| 3.2 | 2032611 | > O-RING ID.36,09X3,53N DIN3771 E7502 | 1 |
| 3.3 | 2507646 | > BALL VALVE G11/4"M-F-W.HANDLE 1/4-TURN | 1 |
| 3.4 | 2032613 | > SCREWED FLANGE G1 1/4" LK-75 ST37VZ | 1 |
| 3.5 | 2032614 | > O-RING ID.29,82X2,62N DIN3771 E7502 | 1 |
| 3.6 | 2032615 | > SPACER F.I/A KUH.DN32 CUZN | 1 |
| 3.7 | 2032616 | > O-RING ID.44X3,53N DIN3771 E7502 | 1 |
| 4 | 4199877 | DELIVERY SIDE Siboost Helix V2/4/6 KIT | 1 |
| 3.1 | 2032610 | > NUT G11/4 MS VP. | 1 |
| 3.2 | 2032611 | > O-RING ID.36,09X3,53N DIN3771 E7502 | 1 |
| 3.3 | 2507646 | > BALL VALVE G11/4"M-F-W.HANDLE 1/4-TURN | 1 |
| 3.4 | 2032613 | > SCREWED FLANGE G1 1/4" LK-75 ST37VZ | 1 |
| 3.5 | 2032614 | > O-RING ID.29,82X2,62N DIN3771 E7502 | 1 |

| Item | Article no. | Description | Quantity |
|---|---|---|---|
| 4.1 | 2058116 | > SPACER F.I/A KUH.DN32 CUZN | 1 |
| 3.7 | 2032616 | > O-RING ID.44X3,53N DIN3771 E7502 | 1 |
| 4.2 | 2058115 | > HOUSING RFV(RV-IN) DN32 SGS/DRS | 1 |
| 4.3 | 2027870 | > NON-RETURN-DEVICE INSERT DN32(MTR) | 1 |
| 5 | 2032642 | DIAPHREM TANK 8L/PN16 DIN4807/T5 KIT | 1 |
| 5.1 | 2045914 | > DIAPHREM TANK 8L TYP-DD 16BAR | 1 |
| 5.2 | 2027853 | > FLOW FITTING G3/4 FOR DIAPHRAGM VES. | 1 |
| 6 | 4197076 | PRESSURE SENSOR/ GAUGE 0-16BAR KIT | 1 |
| 6.1 | 2085909 | > PRESS.SENSOR 1/4" 0-16BAR 4-20MA VP. | 1 |
| 6.2 | 4197077 | > T-PIECE 1/4" VP. | 1 |
| 6.3 | 2028692 | > PRESSURE GAUGE NG63-PN16-G1/4 | 1 |
| 6.4 | 2028291 | > BALL TAP R1/4" PN42 GIACOMINI R254DL | 1 |
| 6.5 | 2028691 | > BLOWGUN 1/4" MS 30BAR VP. | 1 |
| 7 | 4200138 | PIPE DE3 2''-3x11/4"+2x1/4x900 VP. | 1 |
| 8 | 4200139 | PIPE DE3 2''-3x11/4"+2x1/4+1x3/4x900 VP. | 1 |
| 9 | | W-CTRL-SCE-B-3x2,2KW-T4-FM-ND2 | 1 |
| Note: TO / BIS / JUSQU'AU 28/02/2013 | | | |
| 9 | | W-CTRL-SCE-B-3x2,2-3,0KW-T4-FM-ND1 | 1 |
| Note: FROM / AB / À PARTIR DU 01/03/2013 - TO / BIS / JUSQU'AU 18/05/2014 | | | |
| 9 | 2541914 | W-CTRL-SCE-B-3x10A-T34-FM-ND1-AVC-PKG | 1 |
| Note: FROM / AB / À PARTIR DU 19/05/2014 | | | |
| 10 | 4197079 | PLUG G1/4"x10 AISI304 KIT | 1 |
| 11 | 2032654 | PLUG R3/4" MS VIEGA 1751 | 1 |
| 20 | 2521150 | ASSEMBLY WMS. DE-EB. +VP | 1 |
| 20.1 | 2028652 | > PRESSURE SWITCH PS3-ASR 1/(1,3) VP. | 1 |
| 20.2 | 2130983 | > PLUG PS3-415 WITH KABEL 1,5M 2NO VP. | 1 |
| 20.4 | 2028290 | > CROSSPIECE R1/4" MS-NICKEL | 1 |
| 20.5 | 2028687 | > PRESSURE GAUGE NG63 R1/4" HI.0-6BAR | 1 |
| 20.6 | 2054268 | > DUAL NIPPLE G1/4" x G1/4" MS VP. | 1 |
| 20.7 | 2028691 | > BLOWGUN 1/4" MS 30BAR VP. | 1 |
| 20.8 | 2028291 | > BALL TAP R1/4" PN42 GIACOMINI R254DL | 1 |

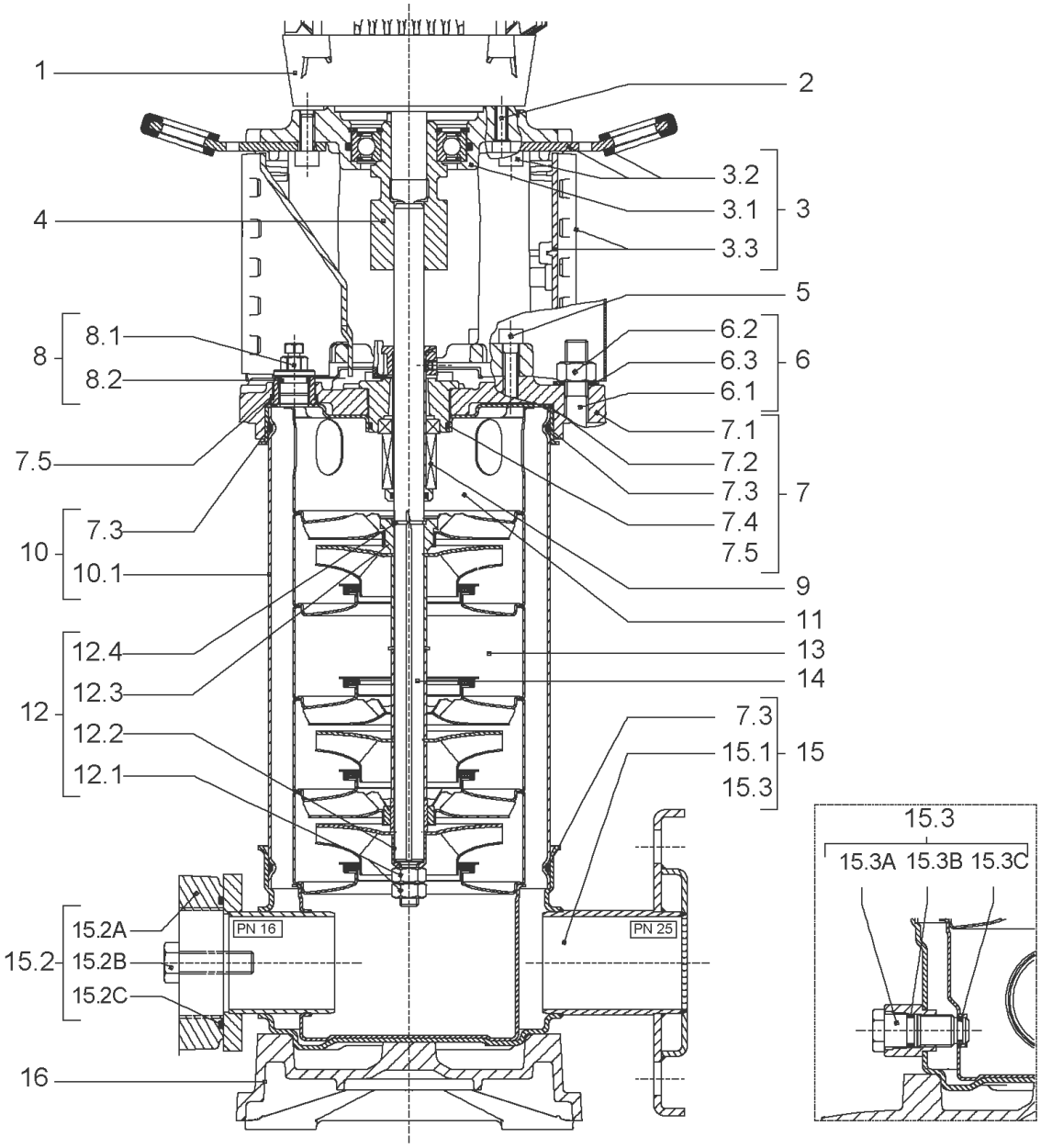
1
2
3.2
3.1
3
3.3
4
5
8.1
8
8.2
6.2
6.3
6
6.1
7.1
7.5
7.2
7.3
7
7.4
7.3
10
7.5
10.1
9
11
12.4
13
12.3
14
12
12.2
7.3
15.1
15
12.1
15.3
15.3
15.3A 15.3B 15.3C
15.2A
PN 16
PN 25
15.2
15.2B
15.2C
16

| Item | Article no. | Description | Quantity |
|---|---|---|---|
| 1 | | DRIVE HELIX-VE410-IE2-WE KIT | 1 |
| Note: MOTOR BRAND WILO ELEC | | | |
| 1 | | DRIVE HELIX-VE410-IE4-WE KIT | 1 |
| Note: MOTOR BRAND WILO ELEC | | | |
| 2 | 4159703 | SCREW M8X40 (4 PIECES) | 1 |
| 3 | 4172795 | LANTERNE FT115 HELIX KIT | 1 |
| 3.1 | | > M+5_6_LANTERN_ONE-PIECE_FT115_CATA | 1 |
| 3.2 | 2127604 | > EYELET CPL.FT HELIX(2 PIECES) | 1 |
| 3.3 | 4159692 | > COUPLING PROTECTOR FT HELIX KIT | 1 |
| 4 | 4178600 | COUPLING D.12XD.24 FT115 KIT | 1 |
| 5 | 4159707 | SCREW M8X30 (4 PIECES) | 1 |
| 6 | 2127554 | STUD BOLT M12X437 KIT | 1 |
| 7 | 4210143 | STATIONARY RING HOLDER HELIX 6" EPDM | 1 |
| 7.2 | 2127607 | > STATIONARY RING HOLDER 6" HELIX 1.4301 V | 1 |
| 7.3 | 4176513 | > O-RING FOR PUMP JACKET VP. | 1 |
| 7.4 | 2127603 | > O-RING ID.37,6x2,4 EPDM VP. | 1 |
| 7.5 | 2127602 | > O-RING ID.21,35x2 EPDM VP. | 1 |
| 8 | 4159686 | FILING/PURGING PLUG HELIX EPDM KIT | 1 |
| 9 | 4178564 | SEAL-KIT-HELIX2-4 O/E KIT | 1 |
| 10 | 2127577 | HOUSING PIPE D.152x310 1.4301 KIT | 1 |
| 11 | 4178566 | CENTERING STAGE-RETURN HELIX4 1.4307 VP | 1 |
| 12 | 4178568 | SHAFT EQUIPMENT HELIX V2/V4 KIT | 1 |
| 12.1 | | > NUT-H-M8-STAINLESS-STEEL A4-70 | 2 |
| 12.2 | | > SHAFT END WASHER Ø8/Ø12 316L | 1 |
| 12.3 | | > STOP COLLAR OF IMPELLER M+2/4 SINGLEBLOC | 1 |
| 12.4 | | > STOP-RUSH-1/2-D12xd2-M+316 | 2 |
| 13 | | HYDRAULIC HELIX V 410 1.4307 | 1 |
| 14 | 4178604 | SHAFT D.12X433 1.4301 VP. | 1 |
| 15 | 4174079 | PUMP HOUSING HELIX DN32 PN16 1.4301 KIT | 1 |
| 7.3 | 4176513 | > O-RING FOR PUMP JACKET VP. | 1 |
| 15.1 | | > BLASTING PPE HOUSING V-PN16-DN32-5"-304 | 1 |
| 15.2 | 4217889 | > COUNTER FLANGE-G1"-PN16-GJL KIT | 1 |
| 15.3 | 4171321 | > PRIMING/DRAIN PLUG EPDM HELIX KIT | 1 |
| 16 | 4177964 | BASEPLATE HELIX V2/4/6 PN16 VP. | 1 |

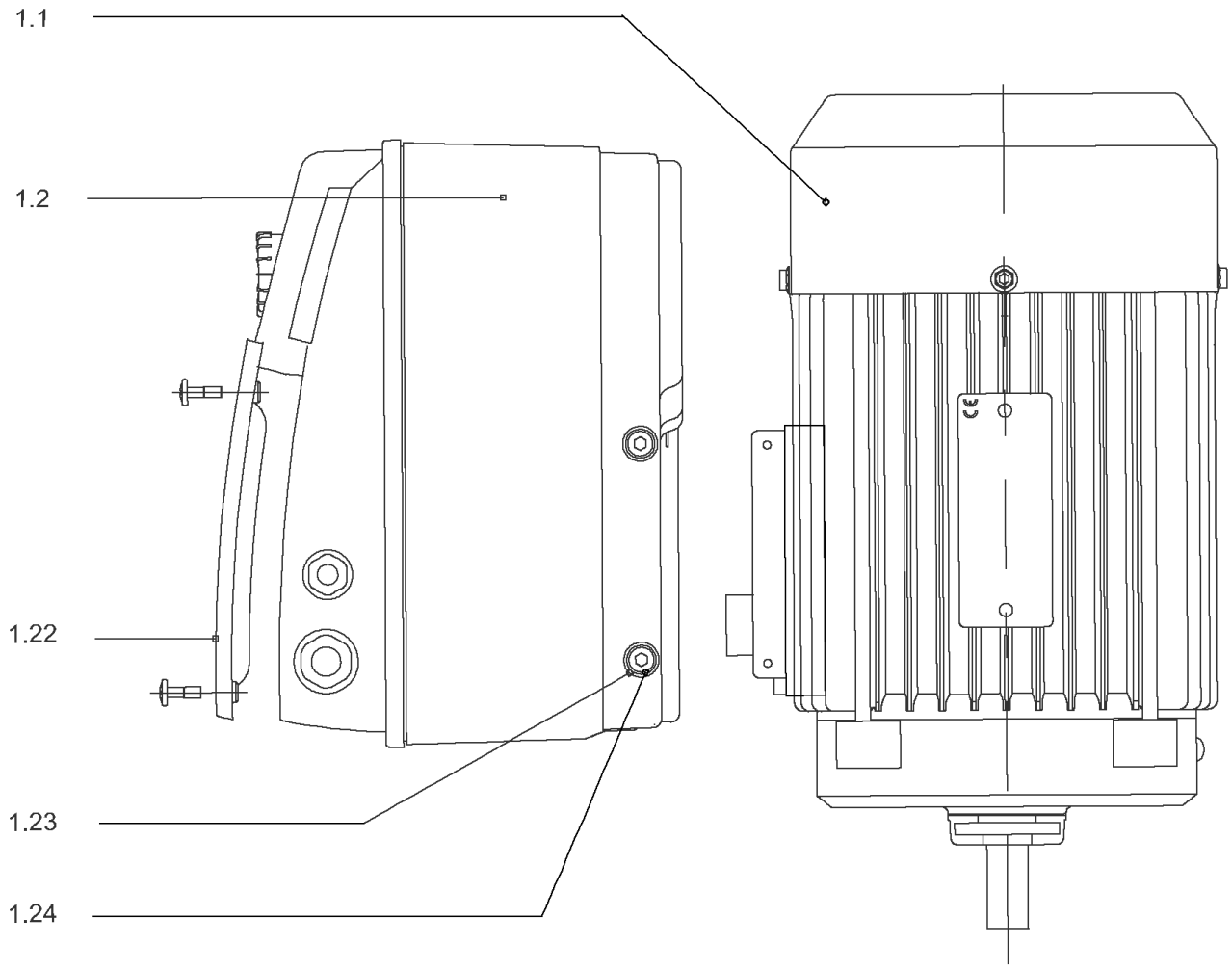
1.1
1.2
1.22
1.23
1.24

## DRIVE HELIX-VE410-IE2-WE KIT

| Item | Article no. | Description | Quantity |
|---|---|---|---|
| 1.1 | 4185016 | MOTOR 2,2/2/90 3~ 380V 60HZ IE2 WE VP. | 1 |
| | | SPARE PARTS MOTOR:ON REQUEST | 1 |
| 1.2 | 4186768 | MODULE HELIX-VE410-IE2-WE KIT | 1 |
| 1.22 | 2054227 | > MODULE COVER/GASKET TL3/4 KIT | 1 |
| 1.23 | 4215716 | > SCREW M5X16 DIN912 8.8 A2A (4pieces) VP. | 1 |
| 1.24 | 2057978 | > RONDELLE A5,3 DIN6797 FST ZN (4 PIECES) | 1 |

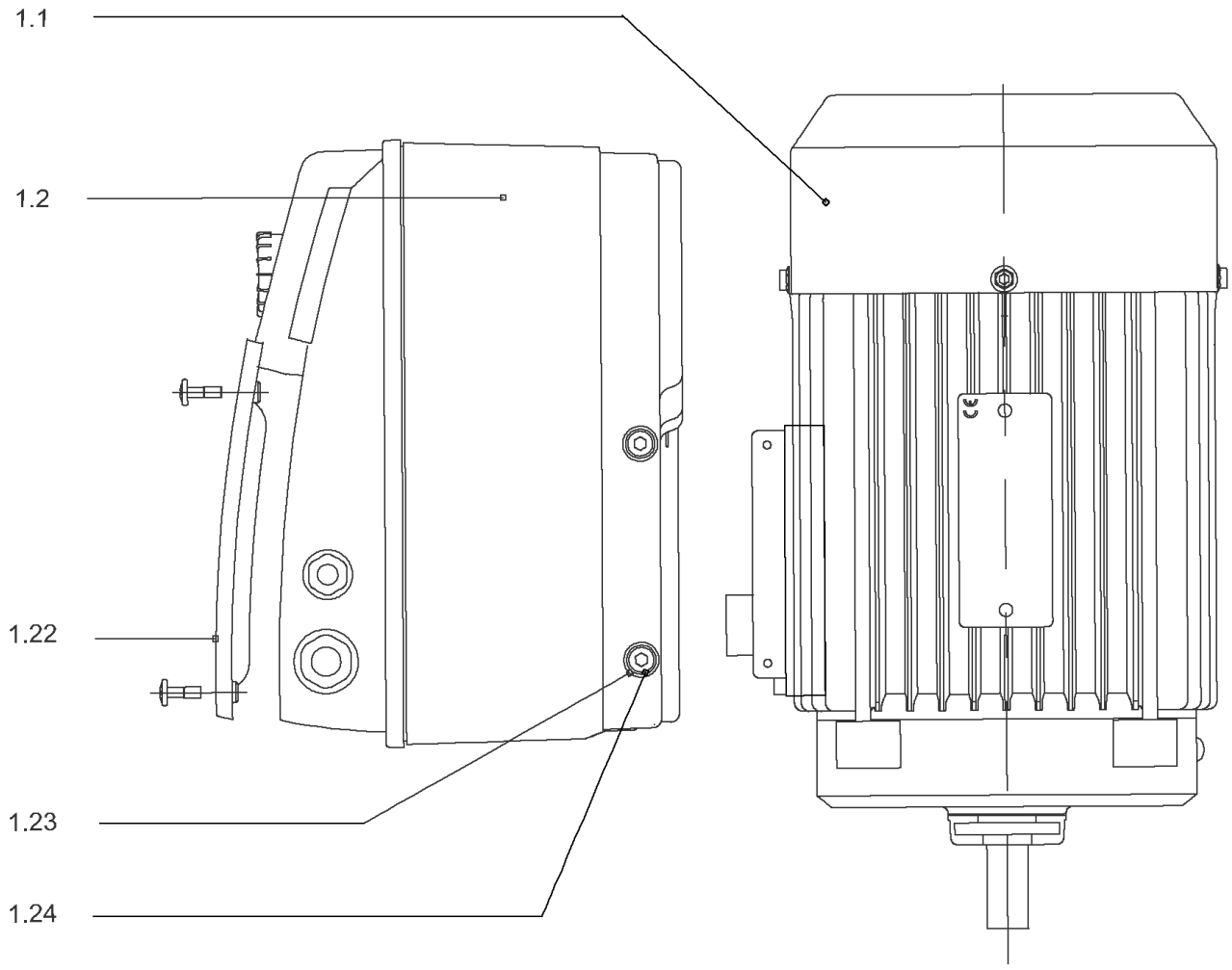
1.1
1.2
1.22
1.23
1.24

## DRIVE HELIX-VE410-IE4-WE KIT

| Item | Article no. | Description | Quantity |
|---|---|---|---|
| 1.1 | 4207920 | MOTOR 2.2/2/90 3~ 380V 60HZ IE4 WE VP. | 1 |
| | | SPARE PARTS MOTOR:ON REQUEST | 1 |
| 1.2 | 4209591 | MODULE HELIX-VE410-IE4-WE KIT | 1 |
| 1.22 | 2054227 | > MODULE COVER/GASKET TL3/4 KIT | 1 |
| 1.23 | 4215716 | > SCREW M5X16 DIN912 8.8 A2A (4pieces) VP. | 1 |
| 1.24 | 2057978 | > RONDELLE A5,3 DIN6797 FST ZN (4 PIECES) | 1 |

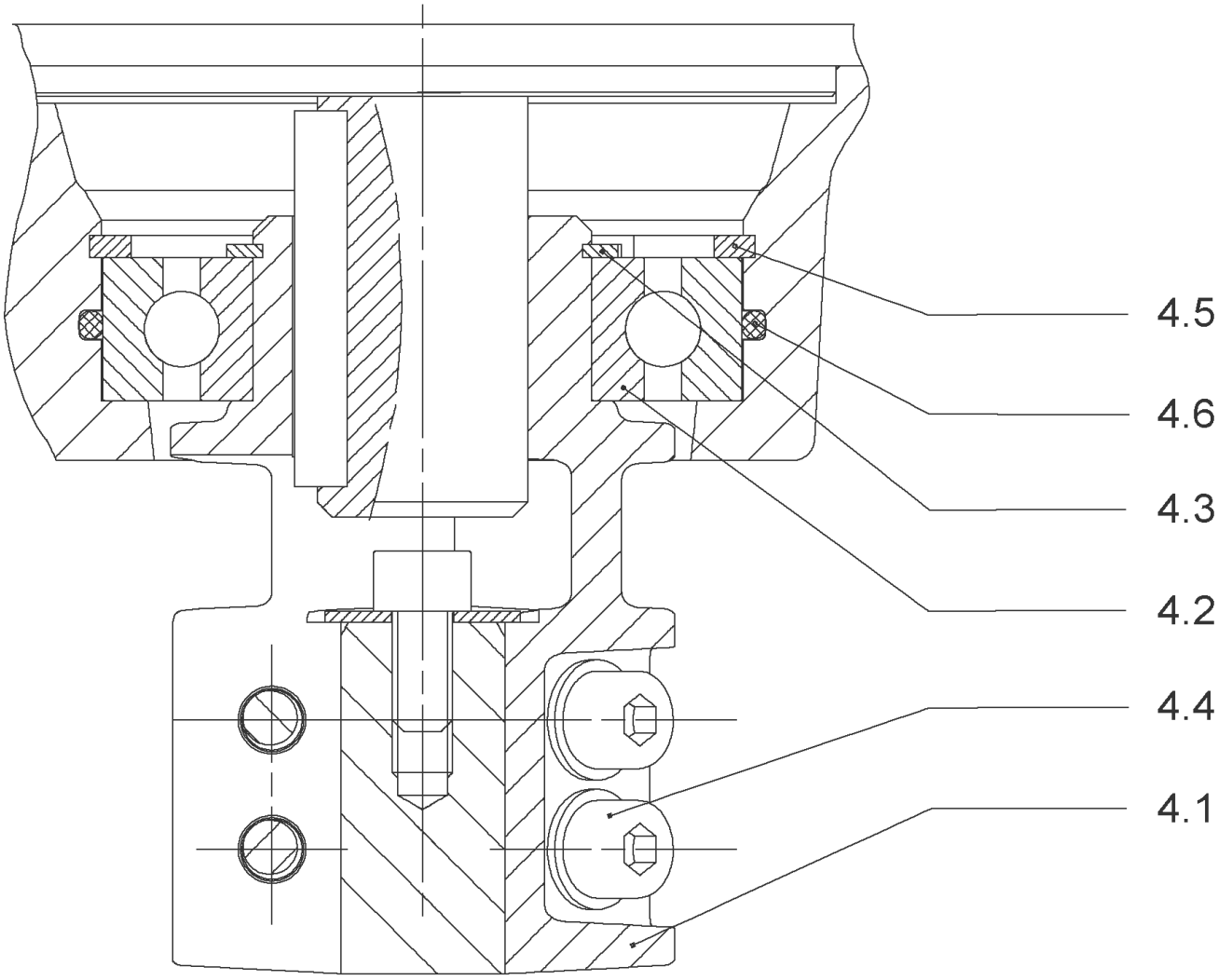
4.5
4.6
4.3
4.2
4.4
4.1

## COUPLING D.12XD.24 FT115 KIT (4178600)

| Item | Article no. | Description | Quantity |
|---|---|---|---|
| 4.1 | | COUPLING-M+ Ø12XØ24-FT115-MACHINED | 1 |
| 4.2 | 2131023 | BALL BEARING 6207/ZZ-C3(HT)VP. | 1 |
| 4.3 | 4234254 | CIRCLIP-FOR-SHAFT-D35x1.5 VP. | 1 |
| 4.4 | 4157726 | SCREW KIT M8X30 (4 PIECES) | 1 |
| 4.5 | 4234251 | CIRCLIP-D72x2.5 VP. | 1 |
| 4.6 | 4234246 | O-RING 72X3 VP. | 1 |
| | | NOMEL CONTACT WASHER 8x16x1,4 STEEL ZC | 1 |

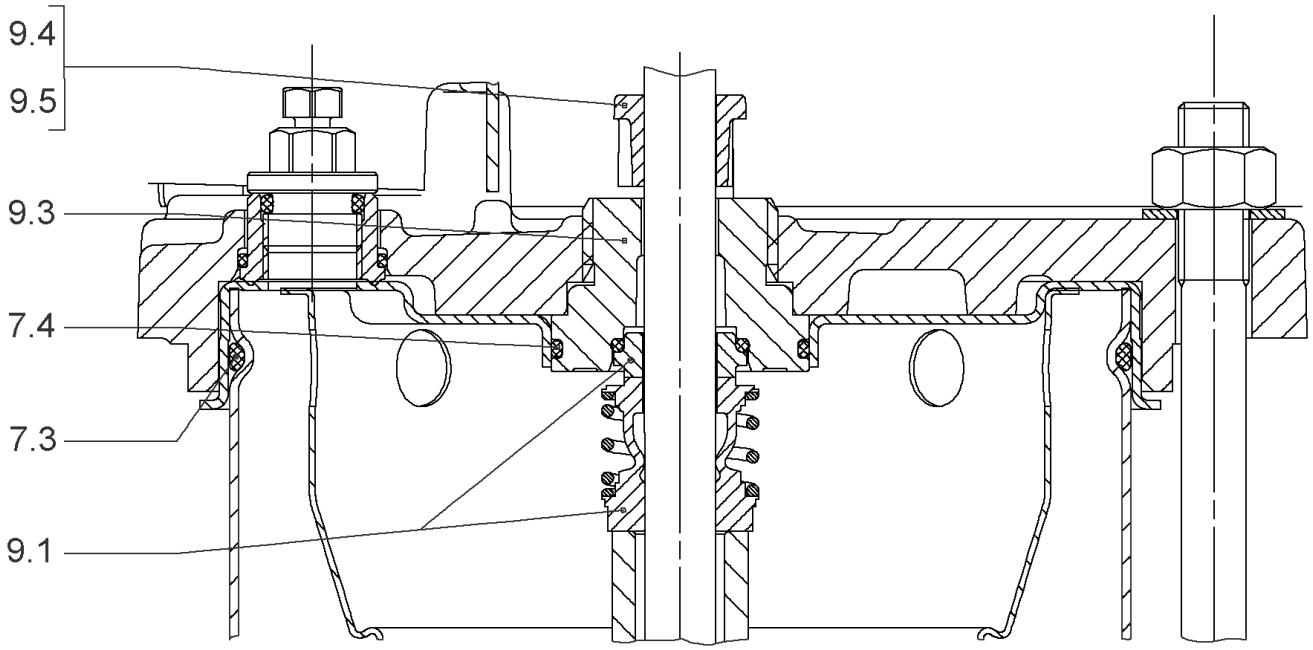
9.4
9.5
9.3
7.4
7.3
9.1

## SEAL-KIT-HELIX2-4 O/E KIT (4178564)

| Item | Article no. | Description | Quantity |
|---|---|---|---|
| 7.3 | 4176513 | O-RING FOR PUMP JACKET VP. | 1 |
| 7.4 | 2127603 | O-RING ID.37,6x2,4 EPDM VP. | 1 |
| 9.1 | 4178563 | M.SEAL.HELIX2-4 O/E VP. | 1 |
| 9.3 | 4178561 | RING HOLDER Ø22 1.4301 VP. | 1 |
| 9.5 | 4178562 | DRIVE RING D.22/12.2X10 MACH.VP. | 1 |
| 9.4 | 4176520 | SCREW CH M5x5 A4-70 ( 3PIECES ) | 1 |

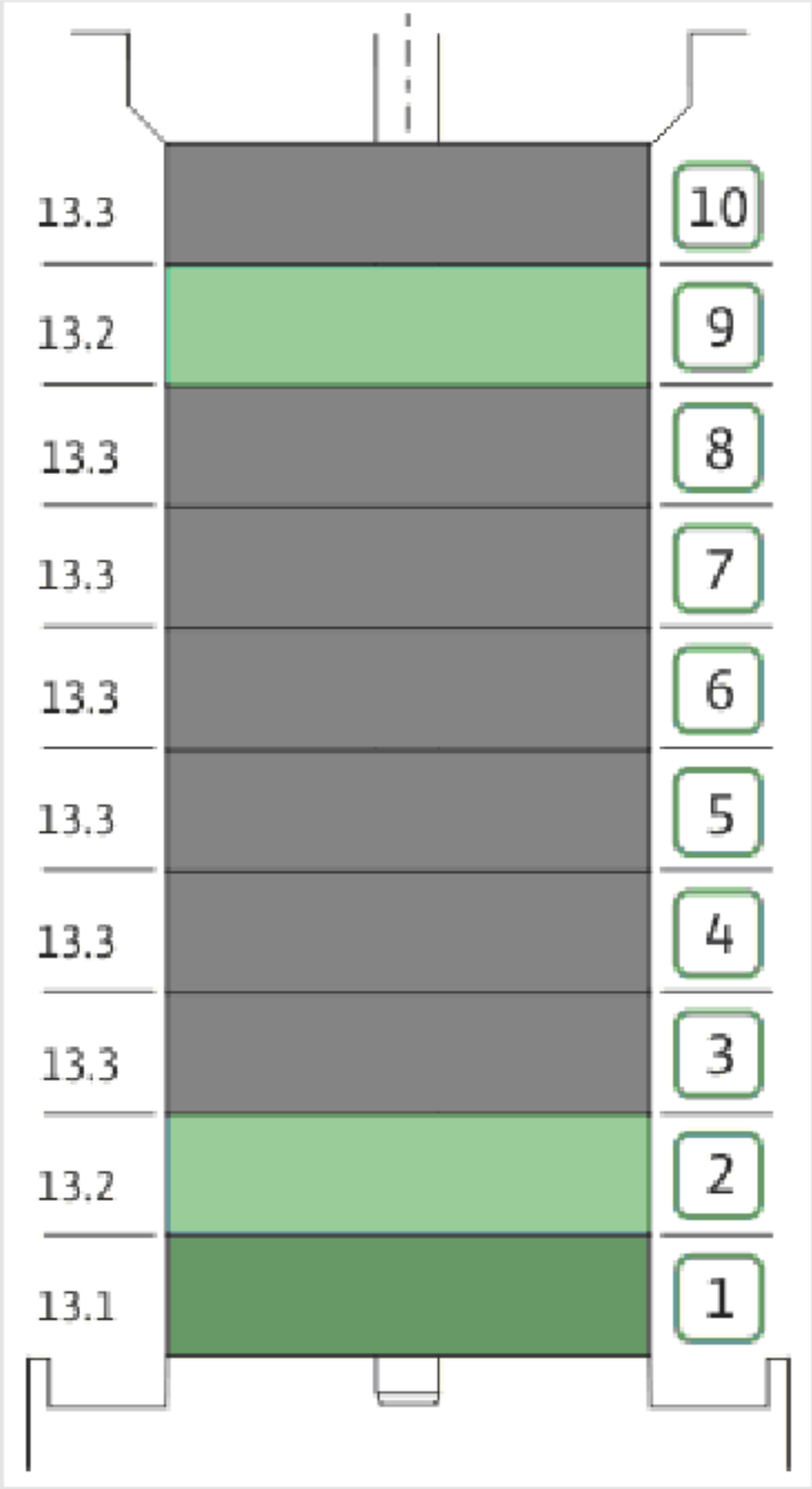
13.3
13.2
13.3
13.3
13.3
13.3
13.3
13.3
13.2
13.1
10
9
8
7
6
5
4
3
2
1

| Item | Article no. | Description | Quantity |
|---|---|---|---|
| 13.1 | 4178570 | STAGE HELIX 4 1.4301 KIT | 1 |
| | | > MACH.STG-CASING-WOGV-WNR-M+2-4-304 | 1 |
| | | > IMPELLER-M+4-304 | 1 |
| 13.2 | 4178569 | STAGE BEARING HELIX 4 1.4301 KIT | 1 |
| | | > MACH.BEARING-STG-CASING-WNR-M+4-304 | 1 |
| | | > IMPELLER-M+4-304 | 1 |
| | | > SHAFT SLEEVE SPACER Ø15,35x10,305-304 | 1 |
| | | > SHAFT-SLEEVE-D12xD16x14-CW | 1 |
| 13.3 | 4178574 | INTER STAGE HELIX4 1.4301< 15 stages KIT | 1 |
| | | > MACH.STD-STG-CASING-WGV+NR-M+4-304 | 1 |
| | | > IMPELLER-M+4-304 | 1 |
| | | > IMPELLER SPACER Ø12,05X14,85-L24,285-304 | 1 |

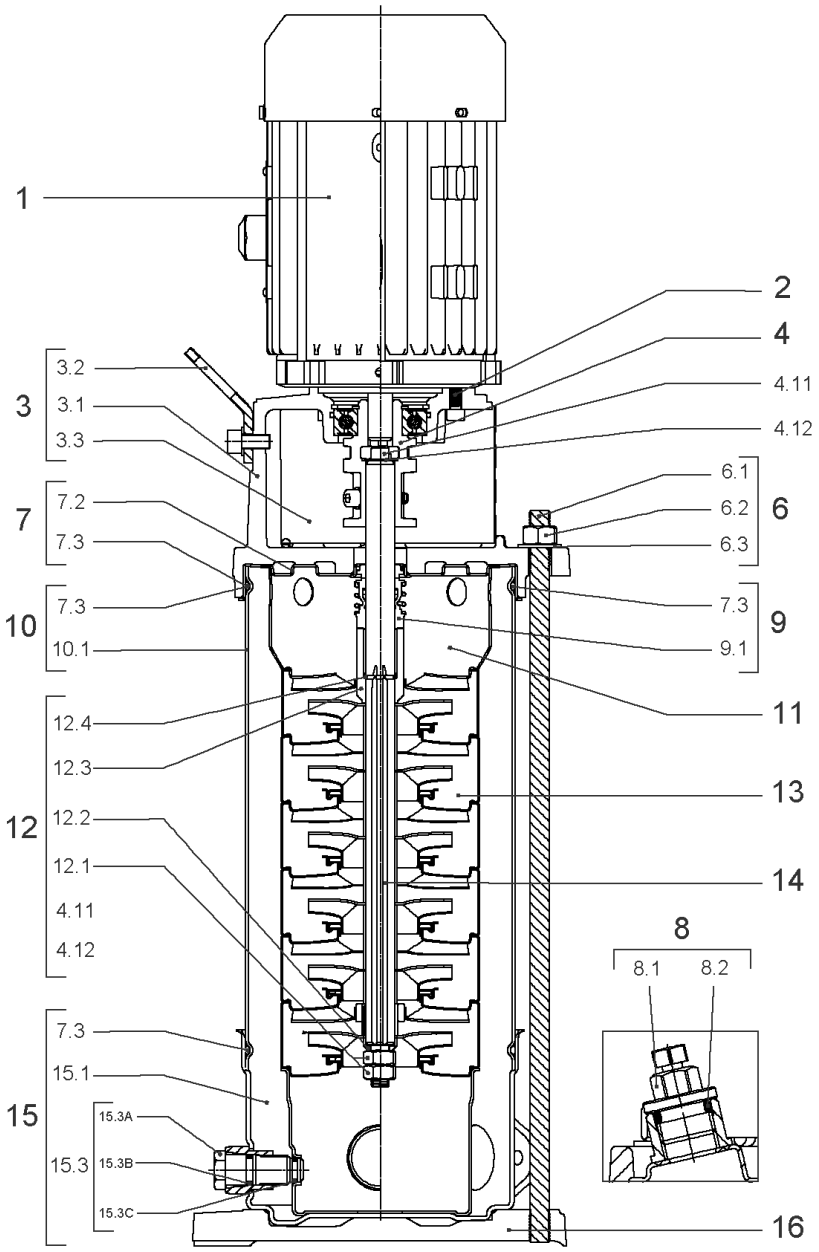
1
2
4
4.11
4.12
3
3.2
3.1
3.3
7
7.2
7.3
6
6.1
6.2
6.3
10
7.3
10.1
9
7.3
9.1
11
12
12.4
12.3
12.2
12.1
4.11
4.12
13
14
8
8.1
8.2
15
7.3
15.1
15.3
15.3A
15.3B
15.3C
16

## HELIX VE410-1/16/E/S (4201575)

| Item | Article no. | Description | Quantity |
|---|---|---|---|
| 1 | | DRIVE HELIX-VE410-IE4-WE KIT | 1 |
| Note: MOTOR BRAND WILO ELEC | | | |
| | | SPARE PARTS MOTOR:ON REQUEST | 1 |
| 2 | 4159707 | SCREW M8X30 (4 PIECES) | 1 |
| 3 | 4213784 | LANTERN FT115 HELIX KIT | 1 |
| 3.1 | | > LANT-MOT-VMI-ReDTC6"-FT115-MACHINED+CATA | 1 |
| 3.2 | 4184852 | > EYELET CPL.FT HELIX (2 PIECES) | 1 |
| 3.3 | 4213782 | > COUPLING PROTECTOR FT115/130 HELIX KIT | 1 |
| 4 | 4178600 | COUPLING D.12XD.24 FT115 KIT | 1 |
| 6 | 2127554 | STUD BOLT M12X437 KIT | 1 |
| 7 | 4212722 | STATIONARY RING HOLDER HELIX D23 ReDTC | 1 |
| 7.2 | 4212720 | > STATIONARY RING HOLDER HELIX D23 VP. | 1 |
| 7.3 | 4176513 | > O-RING FOR PUMP JACKET VP. | 1 |
| 8 | 4212724 | FILING/PURGING PLUG HELIX ReDTC KIT | 1 |
| 8.1 | | > FILLING PLUG MVI6"-304 | 1 |
| 8.2 | 4177800 | > O-RING EPDM PLUG HELIX VP. | 1 |
| 9 | 4212726 | MECH.SEAL HELIX V2/4 O/E ReDTC KIT | 1 |
| 9.1 | 4178563 | > M.SEAL.HELIX2-4 O/E VP. | 1 |
| 7.3 | 4176513 | > O-RING FOR PUMP JACKET VP. | 1 |
| 10 | 2127577 | HOUSING PIPE D.152x310 1.4301 KIT | 1 |
| 11 | 4178566 | CENTERING STAGE-RETURN HELIX4 1.4307 VP | 1 |
| 12 | 4212729 | SHAFT EQUIPMENT HELIX V2/4 ReDTC KIT | 1 |
| 12.1 | | > NUT-H-M8-STAINLESS-STEEL A4-70 | 1 |
| 12.2 | | > SHAFT END WASHER Ø8/Ø12 316L | 1 |
| 12.3 | | > 1/2-SNAP-RING-2/4M3-316L | 1 |
| 12.4 | | > STOP-RUSH-1/2-D12xd2-M+316 | 1 |
| 4.11 | | > SCREW CHC-M6X14-8.8-ISO4762-GEOMET500A | 1 |
| 4.12 | | > WASHER D.24 L6U ZINK | 1 |
| 13 | | HYDRAULIC HELIX V 410 1.4307 | 1 |
| 14 | 4213771 | SHAFT D.12X381 HELIX 1.4057 VP. | 1 |
| 15 | 4174079 | PUMP HOUSING HELIX DN32 PN16 1.4301 KIT | 1 |
| 7.3 | 4176513 | > O-RING FOR PUMP JACKET VP. | 1 |
| 15.1 | | > BLASTING PPE HOUSING V-PN16-DN32-5"-304 | 1 |
| 15.2 | 4217889 | > COUNTER FLANGE-G1"-PN16-GJL KIT | 1 |

| Item | Article no. | Description | Quantity |
|---|---|---|---|
| 15.3 | 4171321 | > PRIMING/DRAIN PLUG EPDM HELIX KIT | 1 |
| 16 | 4177964 | BASEPLATE HELIX V2/4/6 PN16 VP. | 1 |

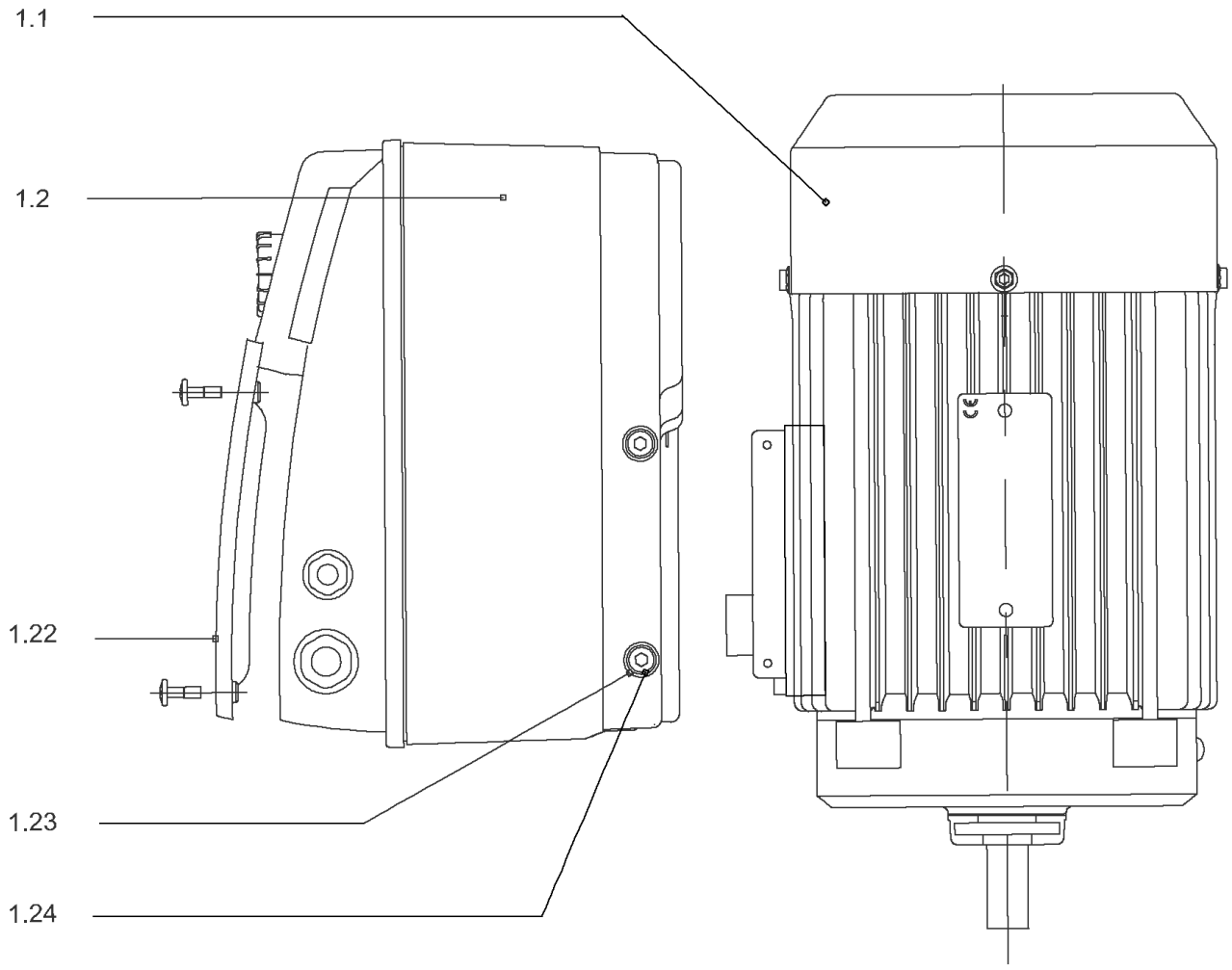
1.1
1.2
1.22
1.23
1.24

## DRIVE HELIX-VE410-IE4-WE KIT

| Item | Article no. | Description | Quantity |
|---|---|---|---|
| 1.1 | 4207920 | MOTOR 2.2/2/90 3~ 380V 60HZ IE4 WE VP. | 1 |
| | | SPARE PARTS MOTOR:ON REQUEST | 1 |
| 1.2 | 4209591 | MODULE HELIX-VE410-IE4-WE KIT | 1 |
| 1.22 | 2054227 | > MODULE COVER/GASKET TL3/4 KIT | 1 |
| 1.23 | 4215716 | > SCREW M5X16 DIN912 8.8 A2A (4pieces) VP. | 1 |
| 1.24 | 2057978 | > RONDELLE A5,3 DIN6797 FST ZN (4 PIECES) | 1 |

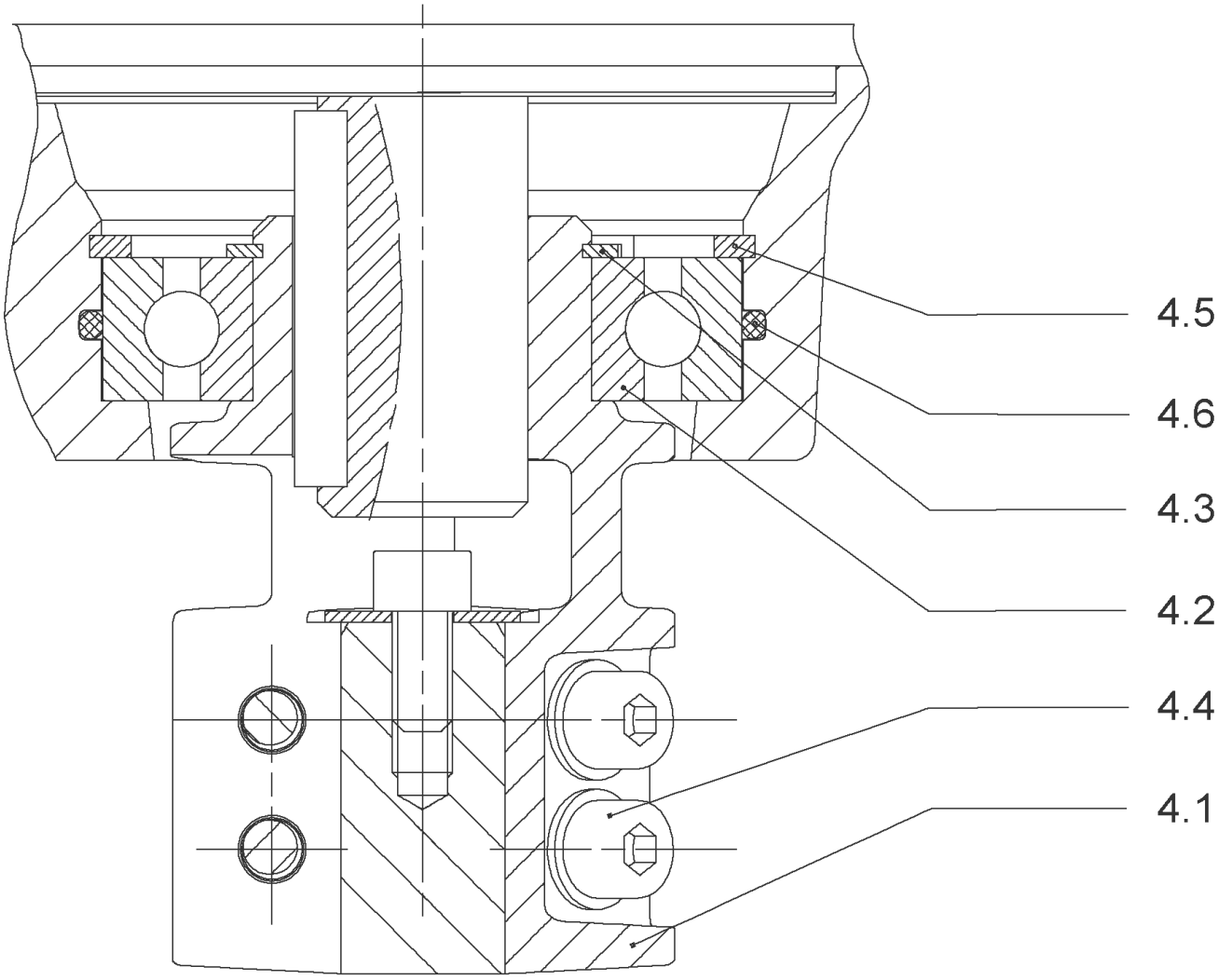
4.5
4.6
4.3
4.2
4.4
4.1

## COUPLING D.12XD.24 FT115 KIT (4178600)

| Item | Article no. | Description | Quantity |
|---|---|---|---|
| 4.1 | | COUPLING-M+ Ø12XØ24-FT115-MACHINED | 1 |
| 4.2 | 2131023 | BALL BEARING 6207/ZZ-C3(HT)VP. | 1 |
| 4.3 | 4234254 | CIRCLIP-FOR-SHAFT-D35x1.5 VP. | 1 |
| 4.4 | 4157726 | SCREW KIT M8X30 (4 PIECES) | 1 |
| 4.5 | 4234251 | CIRCLIP-D72x2.5 VP. | 1 |
| 4.6 | 4234246 | O-RING 72X3 VP. | 1 |
| | | NOMEL CONTACT WASHER 8x16x1,4 STEEL ZC | 1 |

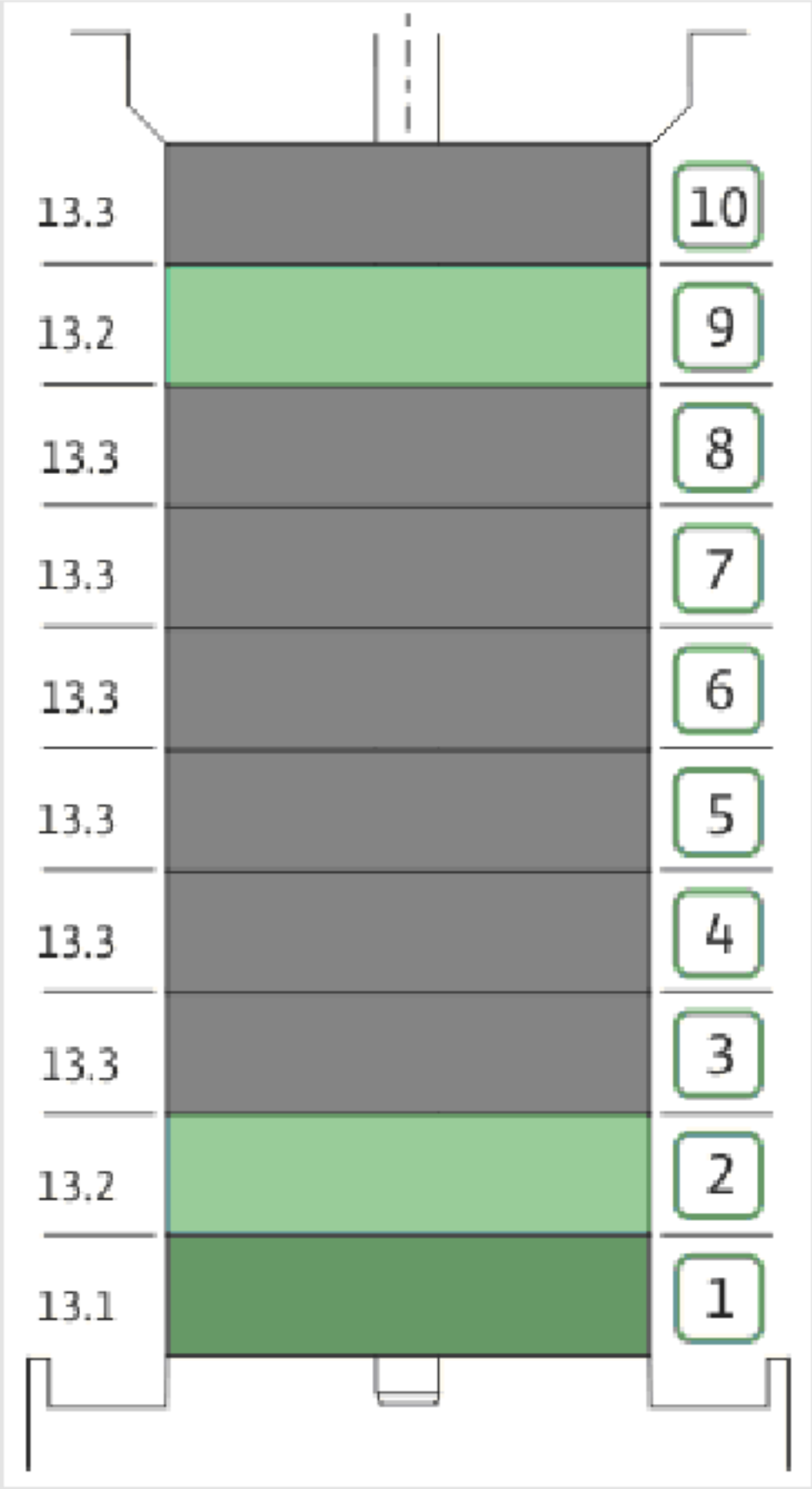
13.3
13.2
13.3
13.3
13.3
13.3
13.3
13.3
13.2
13.1
10
9
8
7
6
5
4
3
2
1

| Item | Article no. | Description | Quantity |
|---|---|---|---|
| 13.1 | 4178570 | STAGE HELIX 4 1.4301 KIT | 1 |
| | | > MACH.STG-CASING-WOGV-WNR-M+2-4-304 | 1 |
| | | > IMPELLER-M+4-304 | 1 |
| 13.2 | 4178569 | STAGE BEARING HELIX 4 1.4301 KIT | 1 |
| | | > MACH.BEARING-STG-CASING-WNR-M+4-304 | 1 |
| | | > IMPELLER-M+4-304 | 1 |
| | | > SHAFT SLEEVE SPACER Ø15,35x10,305-304 | 1 |
| | | > SHAFT-SLEEVE-D12xD16x14-CW | 1 |
| 13.3 | 4178574 | INTER STAGE HELIX4 1.4301< 15 stages KIT | 1 |
| | | > MACH.STD-STG-CASING-WGV+NR-M+4-304 | 1 |
| | | > IMPELLER-M+4-304 | 1 |
| | | > IMPELLER SPACER Ø12,05X14,85-L24,285-304 | 1 |

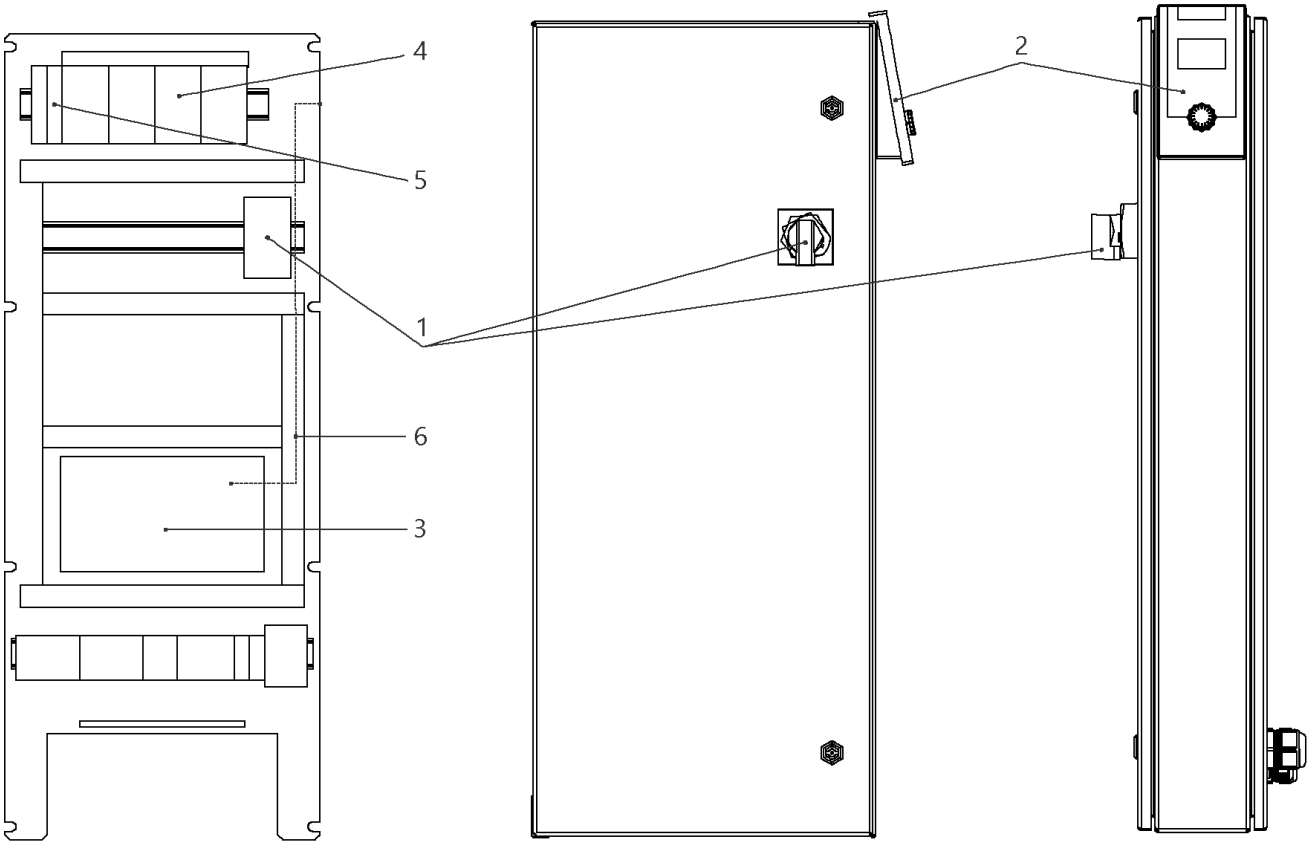
4
5
1
6
3
2

## W-CTRL-SCE-B-3x2,2KW-T4-FM-ND2

| Item | Article no. | Description | Quantity |
|---|---|---|---|
| 1 | 2104470 | MAIN SWITCH OT40F3 L250 KIT | 1 |
| 2 | 4184784 | CONTROL PANEL HMI SC KIT | 1 |
| 2 | 4185259 | ASSEMBLY DISPLAY SC PKG VP. | 1 |
| 3 | 4185257 | ASSEMBLY CPU SCe Booster VP. | 1 |
| 4 | 2051217 | AUTOM.CIRCUIT BREAKER S203 B16 TO7,5kW | 1 |
| 5 | 2046288 | CIRCUIT BREAKER S201 B16 | 1 |
| 6 | 4194956 | PATCH CABLE RJ45 CAT6 1,0M BLUE SC-PANEL | 1 |

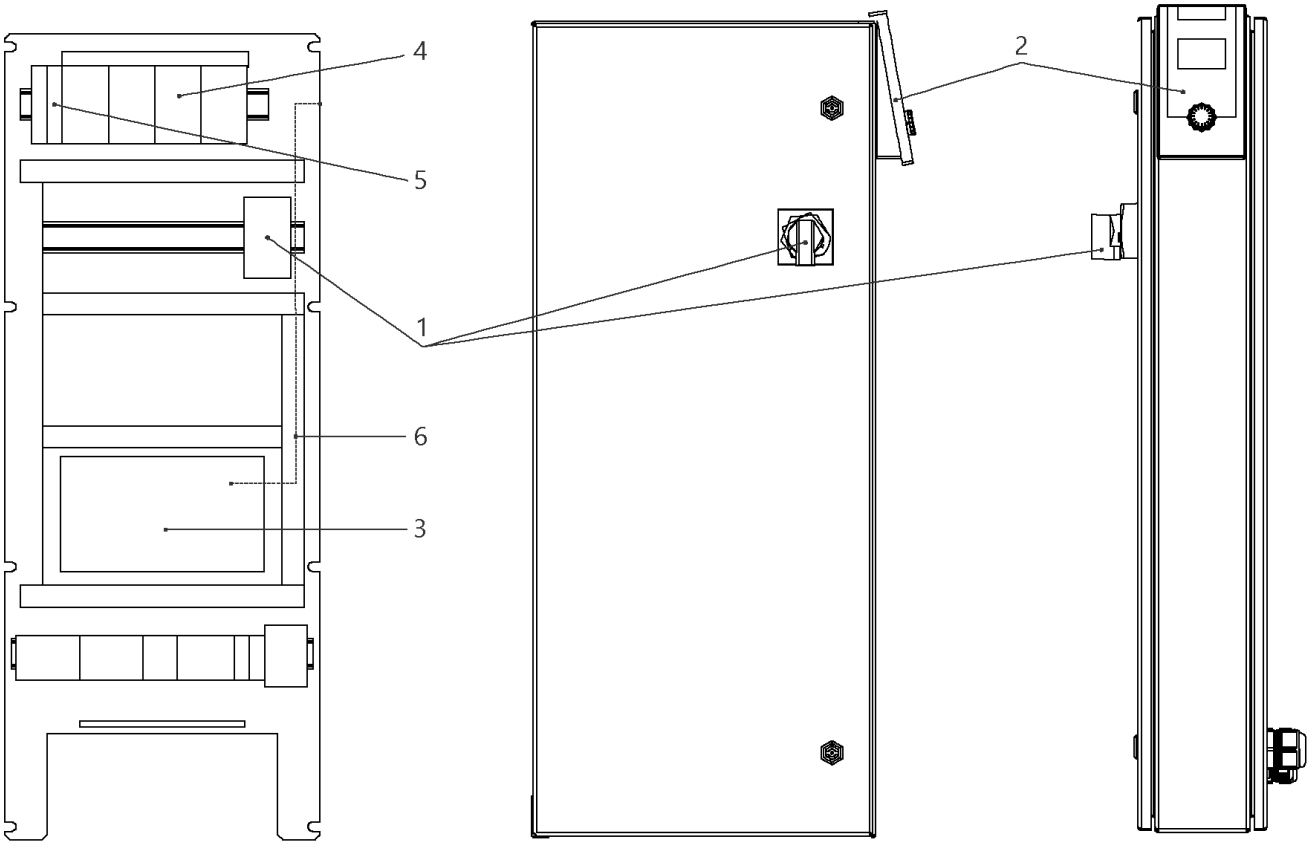
4
5
1
6
3
2

## W-CTRL-SCE-B-3x2,2-3,0KW-T4-FM-ND1

| Item | Article no. | Description | Quantity |
|---|---|---|---|
| 1 | 2104470 | MAIN SWITCH OT40F3 L250 KIT | 1 |
| 2 | 4184784 | CONTROL PANEL HMI SC KIT | 1 |
| 2 | 4185259 | ASSEMBLY DISPLAY SC PKG VP. | 1 |
| 3 | 4185257 | ASSEMBLY CPU SCe Booster VP. | 1 |
| 4 | 2051217 | AUTOM.CIRCUIT BREAKER S203 B16 TO7,5kW | 1 |
| 5 | 2046288 | CIRCUIT BREAKER S201 B16 | 1 |
| 6 | 4197081 | CABLE RJ45 CAT6 0,5M RED SC-PANEL VP. | 1 |

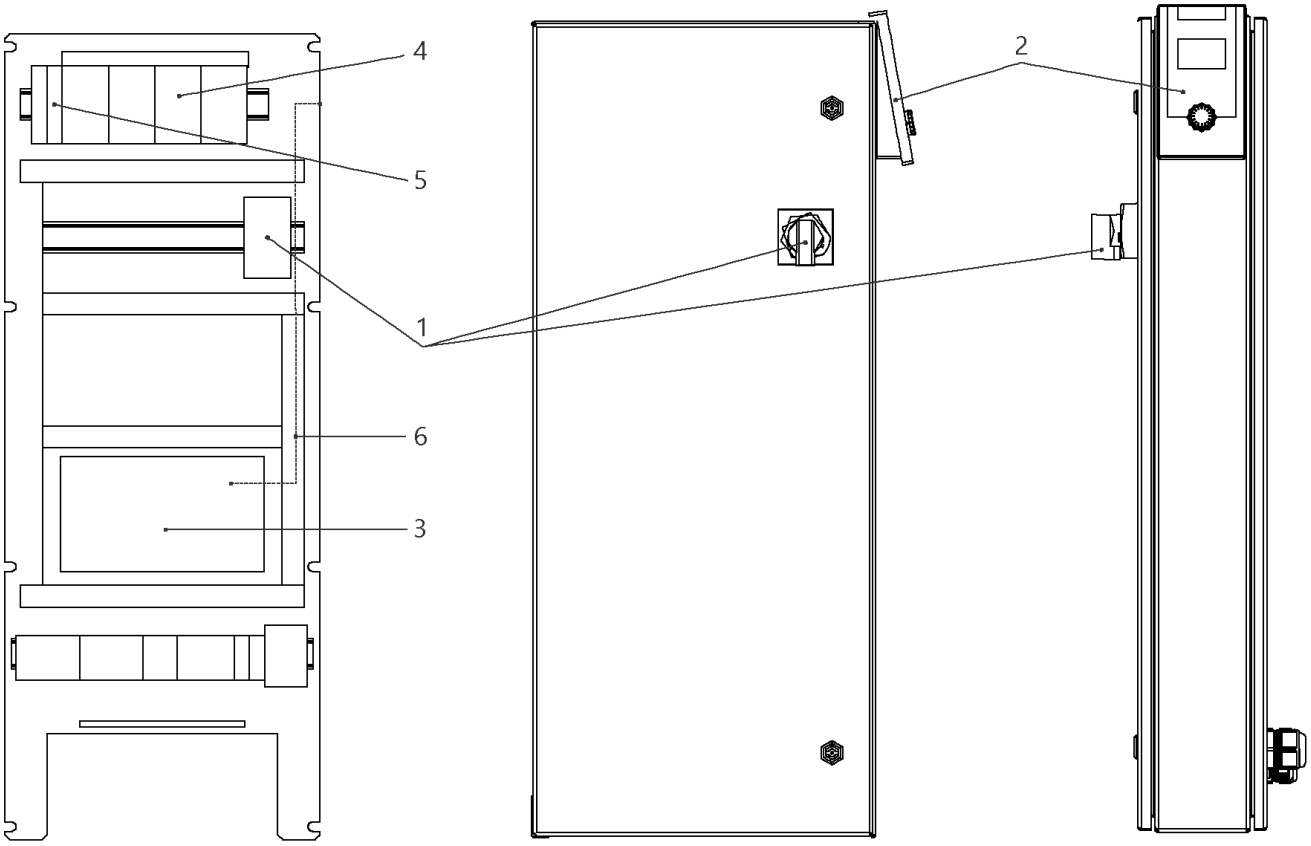
4
5
1
6
3
2

## W-CTRL-SCE-B-3x10A-T34-FM-ND1-AVC-PKG (2541914)

| Item | Article no. | Description | Quantity |
|---|---|---|---|
| 1 | 2104473 | MAIN SWITCH OT63F3 L105 KIT | 1 |
| Note: TO / BIS / JUSQU'AU 30/06/2015 | | | |
| 1 | 2104470 | MAIN SWITCH OT40F3 L250 KIT | 1 |
| Note: FROM / AB / À PARTIR DU 01/07/2015 | | | |
| 2 | 4184784 | CONTROL PANEL HMI SC KIT | 1 |
| 2 | 4185259 | ASSEMBLY DISPLAY SC PKG VP. | 1 |
| Note: DISPLAY ALONE / PLATINE SEULE | | | |
| 3 | 4185257 | ASSEMBLY CPU SCe Booster VP. | 1 |
| 4 | 2119861 | AUTOMATIC CIRCUIT BREAKER S203 B13 3POL. | 1 |
| 5 | 2046288 | CIRCUIT BREAKER S201 B16 | 1 |
| 6 | 4197081 | CABLE RJ45 CAT6 0,5M RED SC-PANEL VP. | 1 |

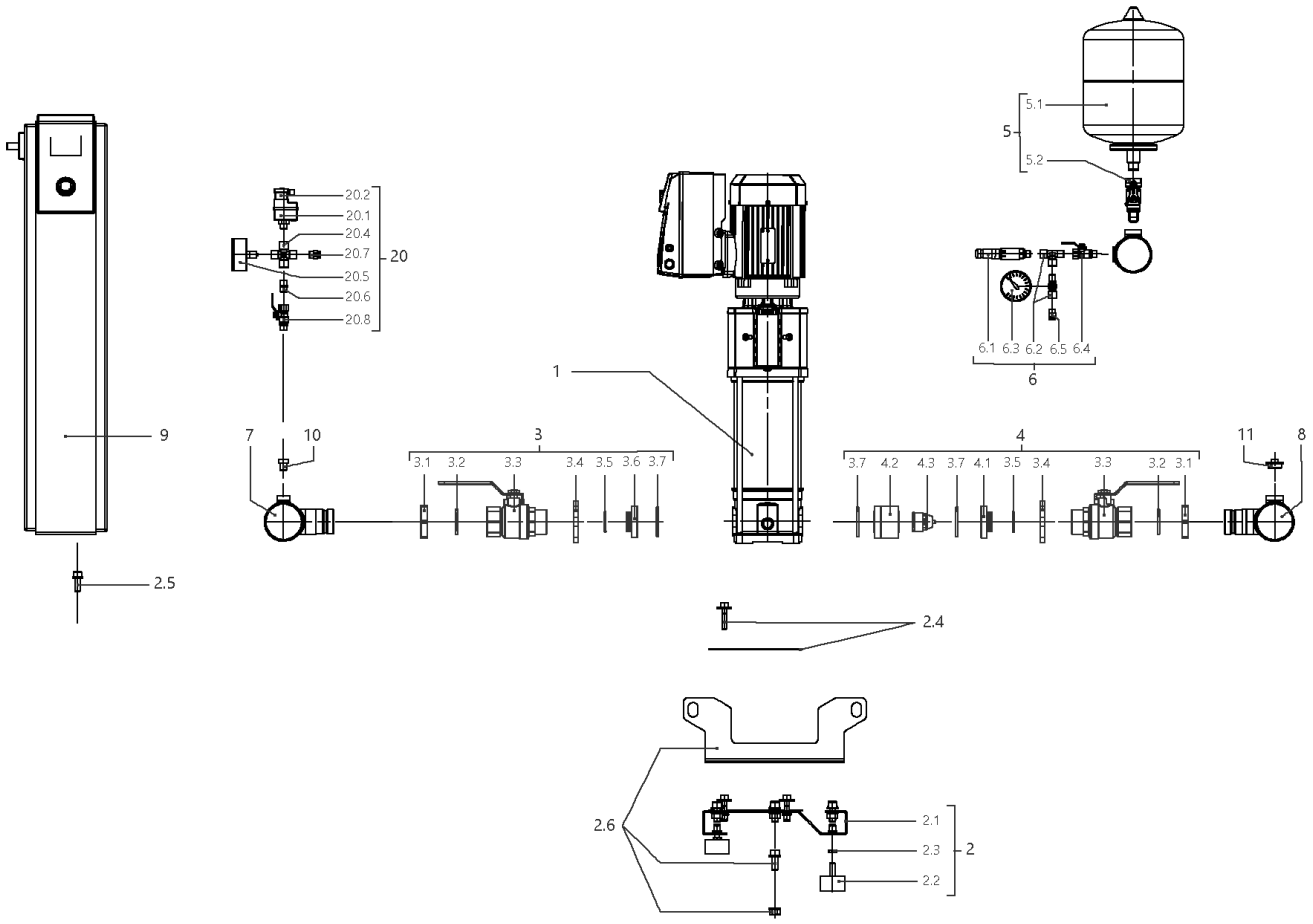
5.1
5
5.2
20.2
20.1
20.4
20.7
20
20.5
20.6
20.8
6.1 6.3 6.2 6.5 6.4
6
1
9
7
10
3
3.1 3.2 3.3 3.4 3.5 3.6 3.7
4
3.7 4.2 4.3 3.7 4.1 3.5 3.4 3.3 3.2 3.1
11
8
2.5
2.4
2.6
2.1
2.3
2
2.2

## SiBoost Smart 3HELIX VE602 (2537340)

| Item | Article no. | Description | Quantity |
|---|---|---|---|
| 1 | | HELIX VE602-1/16/E/S | 1 |
| Note: TO / BIS / JUSQU'AU 31/03/2016 | | | |
| 1 | 4201577 | HELIX VE602-1/16/E/S | 1 |
| Note: FROM / AB / À PARTIR DU 01/04/2016 | | | |
| 2 | 4200137 | BASE PLATE DE3 1150x300 M10 KIT | 1 |
| 2.1 | | > BASEPLATE_3x4/6/10V_E300_1150x300BOX_150 | 1 |
| 2.2 | 2028654 | > VIBRATION DAMPER D.50X30 M10X28 | 1 |
| 2.3 | 2028281 | > NUT M10 DIN936 (ISO4035) 17H VZ | 1 |
| 2.4 | 4199875 | > HOLDER PUMP Siboost Helix V2/4 KIT | 1 |
| 2.5 | 4197084 | > HOLDER SWITCHBOX WILO Smart Control KIT | 1 |
| 2.6 | 4197085 | > LIFTING Siboost HELIX SC KIT | 1 |
| 3 | 4199876 | SUCTION SIDE Siboost Helix V2/4/6 KIT | 1 |
| 3.1 | 2032610 | > NUT G11/4 MS VP. | 1 |
| 3.2 | 2032611 | > O-RING ID.36,09X3,53N DIN3771 E7502 | 1 |
| 3.3 | 2507646 | > BALL VALVE G11/4"M-F-W.HANDLE 1/4-TURN | 1 |
| 3.4 | 2032613 | > SCREWED FLANGE G1 1/4" LK-75 ST37VZ | 1 |
| 3.5 | 2032614 | > O-RING ID.29,82X2,62N DIN3771 E7502 | 1 |
| 3.6 | 2032615 | > SPACER F.I/A KUH.DN32 CUZN | 1 |
| 3.7 | 2032616 | > O-RING ID.44X3,53N DIN3771 E7502 | 1 |
| 4 | 4199877 | DELIVERY SIDE Siboost Helix V2/4/6 KIT | 1 |
| 3.1 | 2032610 | > NUT G11/4 MS VP. | 1 |
| 3.2 | 2032611 | > O-RING ID.36,09X3,53N DIN3771 E7502 | 1 |
| 3.3 | 2507646 | > BALL VALVE G11/4"M-F-W.HANDLE 1/4-TURN | 1 |
| 3.4 | 2032613 | > SCREWED FLANGE G1 1/4" LK-75 ST37VZ | 1 |
| 3.5 | 2032614 | > O-RING ID.29,82X2,62N DIN3771 E7502 | 1 |
| 4.1 | 2058116 | > SPACER F.I/A KUH.DN32 CUZN | 1 |
| 3.7 | 2032616 | > O-RING ID.44X3,53N DIN3771 E7502 | 1 |
| 4.2 | 2058115 | > HOUSING RFV(RV-IN) DN32 SGS/DRS | 1 |
| 4.3 | 2027870 | > NON-RETURN-DEVICE INSERT DN32(MTR) | 1 |
| 5 | 2032642 | DIAPHREM TANK 8L/PN16 DIN4807/T5 KIT | 1 |
| 5.1 | 2045914 | > DIAPHREM TANK 8L TYP-DD 16BAR | 1 |
| 5.2 | 2027853 | > FLOW FITTING G3/4 FOR DIAPHRAGM VES. | 1 |
| 6 | 4197076 | PRESSURE SENSOR/ GAUGE 0-16BAR KIT | 1 |
| 6.1 | 2085909 | > PRESS.SENSOR 1/4" 0-16BAR 4-20MA VP. | 1 |

| Item | Article no. | Description | Quantity |
|---|---|---|---|
| 6.2 | 4197077 | > T-PIECE 1/4" VP. | 1 |
| 6.3 | 2028692 | > PRESSURE GAUGE NG63-PN16-G1/4 | 1 |
| 6.4 | 2028291 | > BALL TAP R1/4" PN42 GIACOMINI R254DL | 1 |
| 6.5 | 2028691 | > BLOWGUN 1/4" MS 30BAR VP. | 1 |
| 7 | 4200140 | PIPE DE3 21/2''-3x11/4"+2x1/4x900 VP. | 1 |
| 8 | 4200141 | PIPE DE3 21/2''-3x11/4"+2x1/4+1x3/4x900 | 1 |
| 9 | | W-CTRL-SCE-B-3x0,55-1,5KW-T4-FM-ND1 | 1 |
| Note: TO / BIS / JUSQU'AU 18/05/2014 | | | |
| 9 | 2541914 | W-CTRL-SCE-B-3x10A-T34-FM-ND1-AVC-PKG | 1 |
| Note: FROM / AB / À PARTIR DU 19/05/2014 | | | |
| 10 | 4197079 | PLUG G1/4"x10 AISI304 KIT | 1 |
| 11 | 2032654 | PLUG R3/4" MS VIEGA 1751 | 1 |
| 20 | 2521150 | ASSEMBLY WMS. DE-EB. +VP | 1 |
| 20.1 | 2028652 | > PRESSURE SWITCH PS3-ASR 1/(1,3) VP. | 1 |
| 20.2 | 2130983 | > PLUG PS3-415 WITH KABEL 1,5M 2NO VP. | 1 |
| 20.4 | 2028290 | > CROSSPIECE R1/4" MS-NICKEL | 1 |
| 20.5 | 2028687 | > PRESSURE GAUGE NG63 R1/4" HI.0-6BAR | 1 |
| 20.6 | 2054268 | > DUAL NIPPLE G1/4" x G1/4" MS VP. | 1 |
| 20.7 | 2028691 | > BLOWGUN 1/4" MS 30BAR VP. | 1 |
| 20.8 | 2028291 | > BALL TAP R1/4" PN42 GIACOMINI R254DL | 1 |

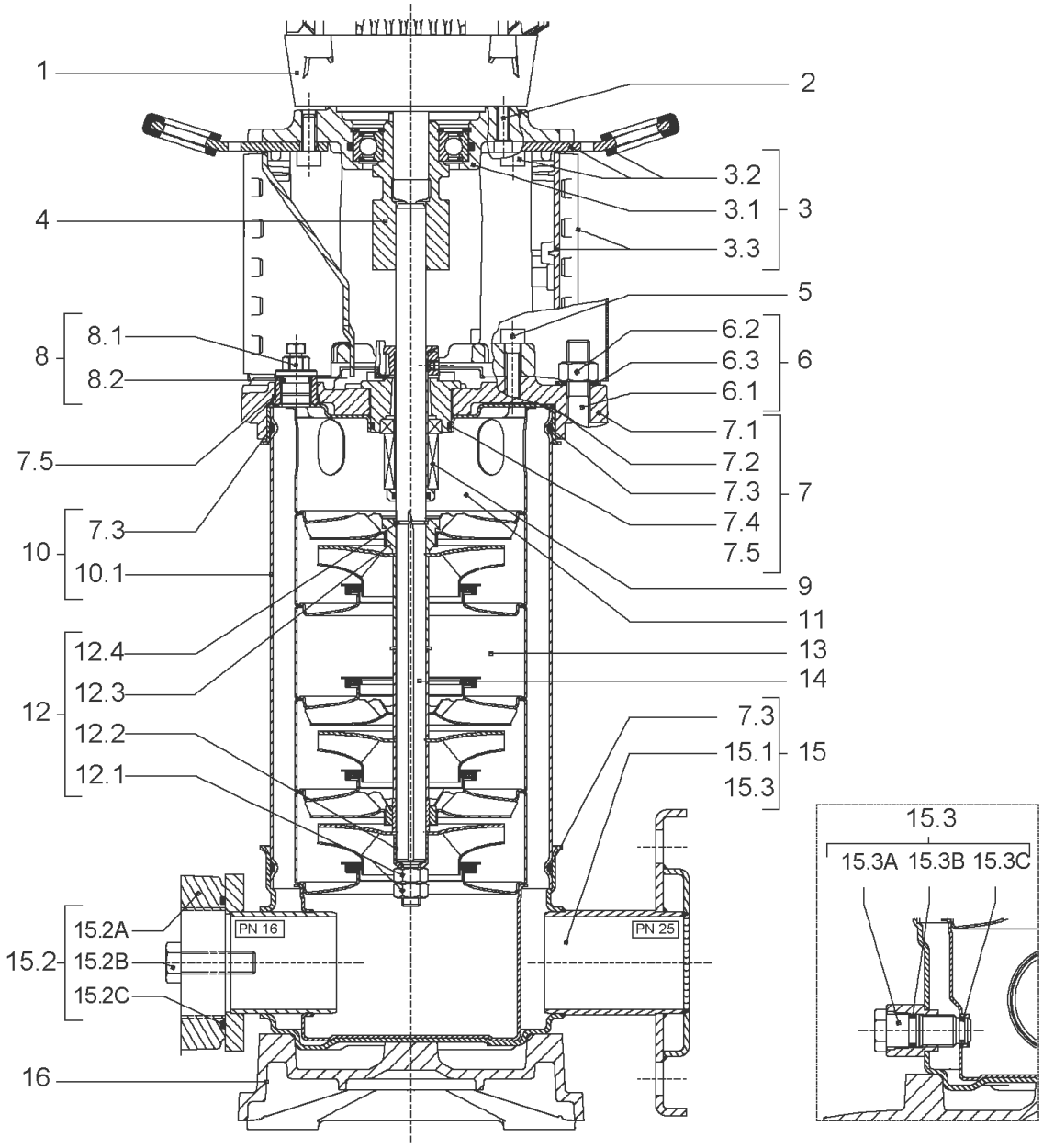
1
2
3.2
3.1
3
3.3
4
5
8.1
8
8.2
6.2
6.3
6
6.1
7.1
7.5
7.2
7.3
7
7.4
7.3
10
7.5
10.1
9
11
12.4
13
12.3
14
12
12.2
7.3
15.1
15
12.1
15.3
15.3
15.3A 15.3B 15.3C
15.2A
PN 16
PN 25
15.2
15.2B
15.2C
16

| Item | Article no. | Description | Quantity |
|---|---|---|---|
| 1 | | DRIVE HELIX-VE602IE2-WE KIT | 1 |
| Note: MOTOR BRAND WILO ELEC | | | |
| 1 | | DRIVE HELIX-VE602-IE4-WE KIT | 1 |
| Note: MOTOR BRAND WILO ELEC | | | |
| 2 | 4159702 | SCREW M6X30 (4 PIECES) | 1 |
| 3 | 4172790 | EQUIPED LANTERN NEXIS FT 100 KIT | 1 |
| 3.1 | | > M+5_6_LANTERN_ONE-PIECE_FT100_CATA | 1 |
| 3.2 | 2127604 | > EYELET CPL.FT HELIX(2 PIECES) | 1 |
| 3.3 | 4159692 | > COUPLING PROTECTOR FT HELIX KIT | 1 |
| 4 | 4159708 | COUPLING D.16XD.19 FT100 HELIX KIT | 1 |
| 5 | 4159707 | SCREW M8X30 (4 PIECES) | 1 |
| 6 | 4177803 | STUD BOLT M12X263 KIT | 1 |
| 6.1 | | > TIE BOLT M12-263x18x30-1.4057 | 1 |
| 6.2 | 2094647 | > NUT M12 M12 ISO4032 VP. | 1 |
| 6.3 | 2123557 | > WASHER CS-12.4-24-1.6-NFE25 (4 PIECES) | 1 |
| 7 | 4210143 | STATIONARY RING HOLDER HELIX 6" EPDM | 1 |
| 7.2 | 2127607 | > STATIONARY RING HOLDER 6" HELIX 1.4301 V | 1 |
| 7.3 | 4176513 | > O-RING FOR PUMP JACKET VP. | 1 |
| 7.4 | 2127603 | > O-RING ID.37,6x2,4 EPDM VP. | 1 |
| 7.5 | 2127602 | > O-RING ID.21,35x2 EPDM VP. | 1 |
| 8 | 4159686 | FILING/PURGING PLUG HELIX EPDM KIT | 1 |
| 9 | 4171327 | SEAL-KIT-HELIX6-10-16 O/E KIT | 1 |
| 10 | 4177804 | HOUSING PIPES D.152X134 1.4301 KIT | 1 |
| 7.3 | 4176513 | > O-RING FOR PUMP JACKET VP. | 1 |
| 10.1 | | > HOUSING-PIPE Ø152-M+1001/02-304 | 1 |
| 11 | 4174087 | CENTERING STAGE-RETURN HELIX6 1.4301VP. | 1 |
| 12 | 4174086 | SHAFTS EQUIPMENT HELIX V6 MONOBLOC KIT | 1 |
| 12.1 | | > NUT-H-M10-A4.70 | 1 |
| 12.2 | | > SERRATED LOCK WASHER M+6M3-316L | 1 |
| 12.3 | | > IMPELLER STOP RING L33,2-304 | 1 |
| 12.4 | | > STOP-RUSH-1/2-D16xd2-M+316 | 1 |
| 13 | | HYDRAULIC HELIX V 602 1.4307 | 1 |
| 14 | 4177807 | SHAFT D.16X255 1.4301 VP. | 1 |
| 15 | 4217897 | PUMP HOUSING HELIX DN32 PN16 1.4301 KIT | 1 |

| Item | Article no. | Description | Quantity |
|---|---|---|---|
| 7.3 | 4176513 | > O-RING FOR PUMP JACKET VP. | 1 |
| 15.1 | | > BLASTING PPE HOUSING V-PN16-DN32-5"-304 | 1 |
| 15.2 | 4217891 | > COUNTER FLANGE-G1"1/4-PN16-GJL KIT | 1 |
| 15.3 | 4171321 | > PRIMING/DRAIN PLUG EPDM HELIX KIT | 1 |
| 16 | 4177964 | BASEPLATE HELIX V2/4/6 PN16 VP. | 1 |

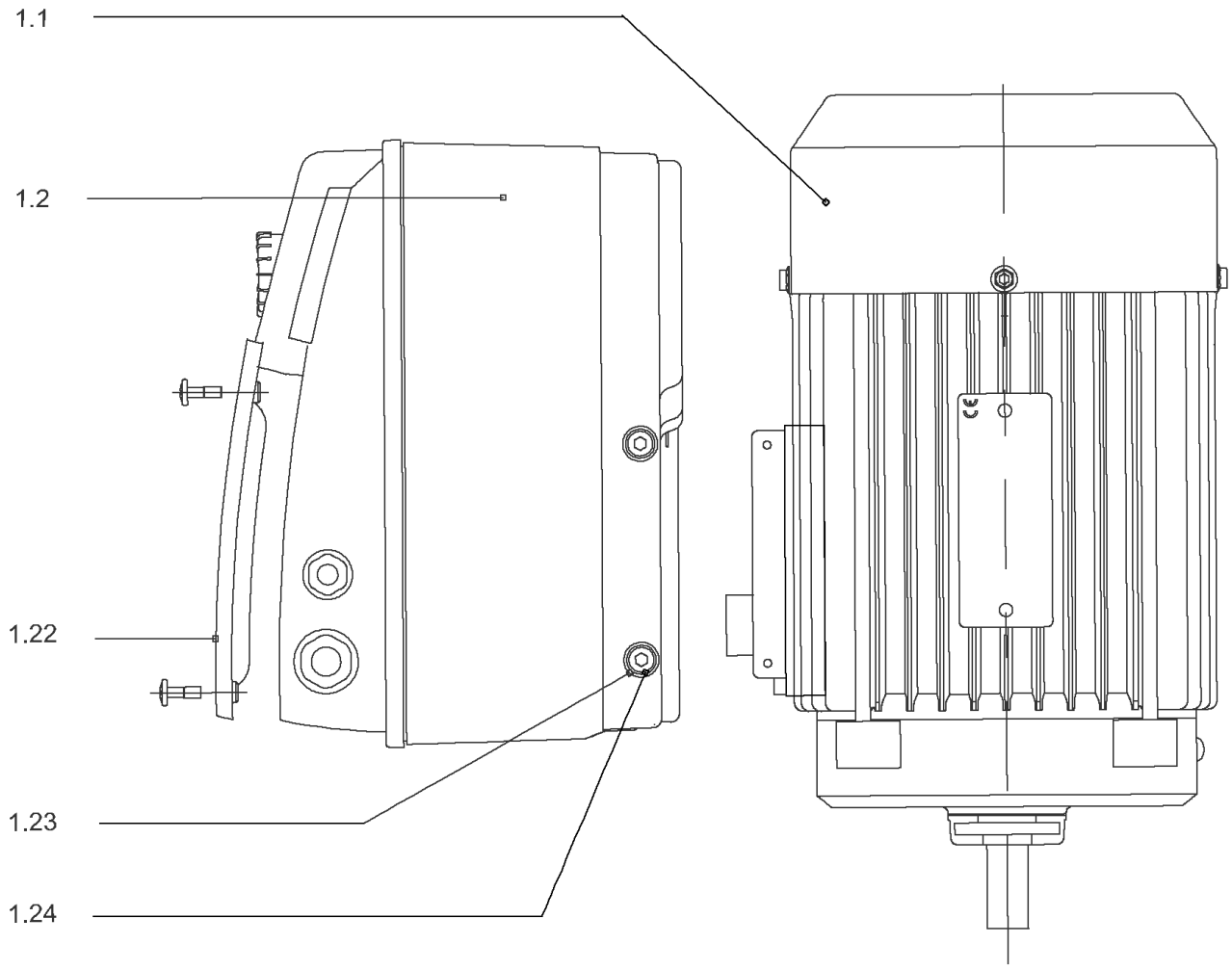
1.1
1.2
1.22
1.23
1.24

## DRIVE HELIX-VE602IE2-WE KIT

| Item | Article no. | Description | Quantity |
|---|---|---|---|
| 1.1 | | MOTOR 0,75/2/80 3~ 380V 60HZ IE2 WE VP. | 1 |
| Note: no longer available/nicht mehrlieferbar/n'est plus disponible | | | |
| | | SPARE PARTS MOTOR:ON REQUEST | 1 |
| 1.2 | 4186330 | MODULE HELIX-VE602-IE2-WE KIT | 1 |
| 1.22 | 2054372 | > MODULE COVER TL1,TL2+GASKET KIT | 1 |
| 1.23 | 4215716 | > SCREW M5X16 DIN912 8.8 A2A (4pieces) VP. | 1 |
| 1.24 | 2057978 | > RONDELLE A5,3 DIN6797 FST ZN (4 PIECES) | 1 |

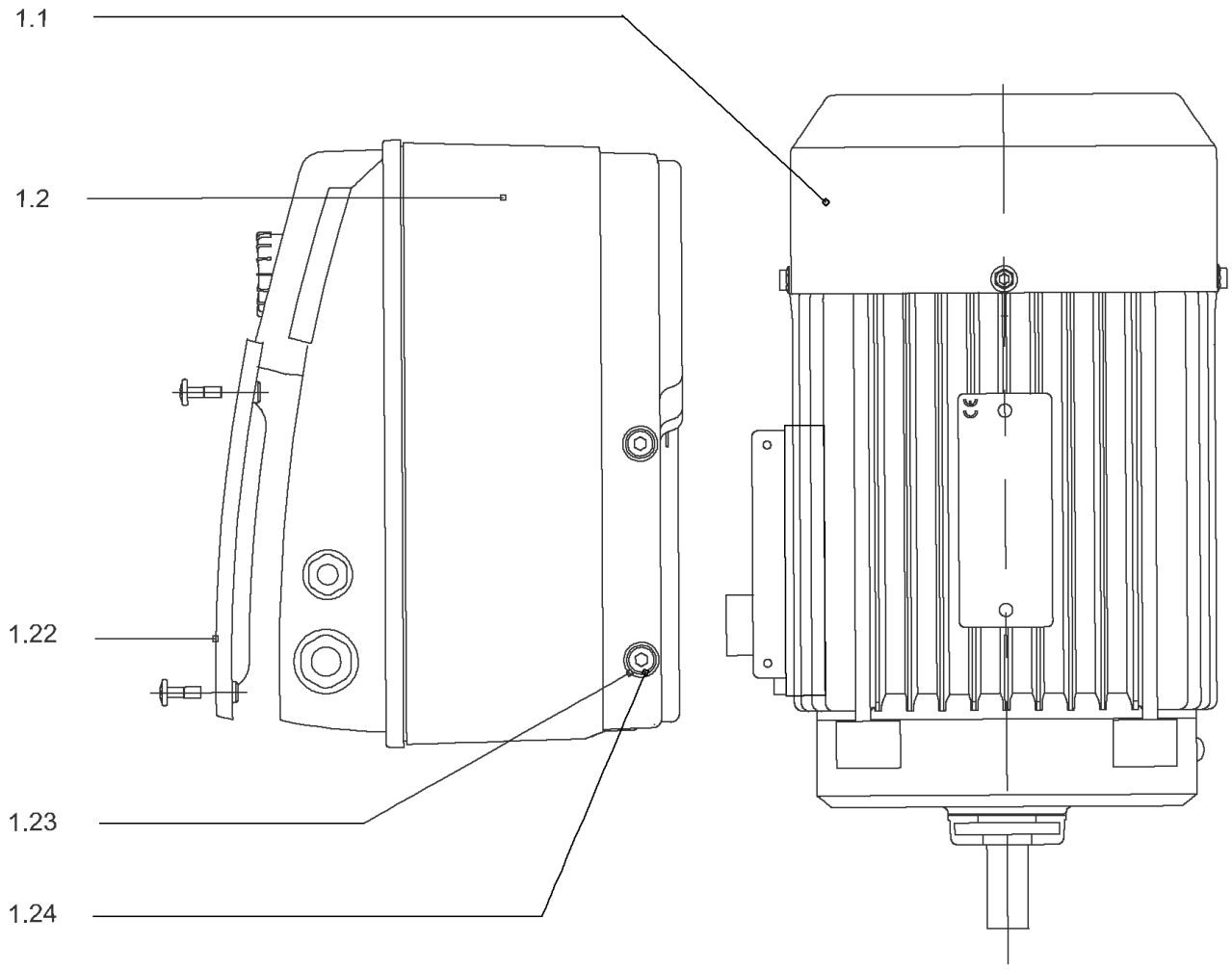
1.1
1.2
1.22
1.23
1.24

## DRIVE HELIX-VE602-IE4-WE KIT

| Item | Article no. | Description | Quantity |
|---|---|---|---|
| 1.1 | 4207914 | MOTOR 0.75/2/80 3~ 380V 60HZ IE4 WE VP. | 1 |
| | | SPARE PARTS MOTOR:ON REQUEST | 1 |
| 1.2 | 4209323 | MODULE HELIX-VE602-IE4-WE KIT | 1 |
| 1.22 | 2054372 | > MODULE COVER TL1,TL2+GASKET KIT | 1 |
| 1.23 | 4215716 | > SCREW M5X16 DIN912 8.8 A2A (4pieces) VP. | 1 |
| 1.24 | 2057978 | > RONDELLE A5,3 DIN6797 FST ZN (4 PIECES) | 1 |

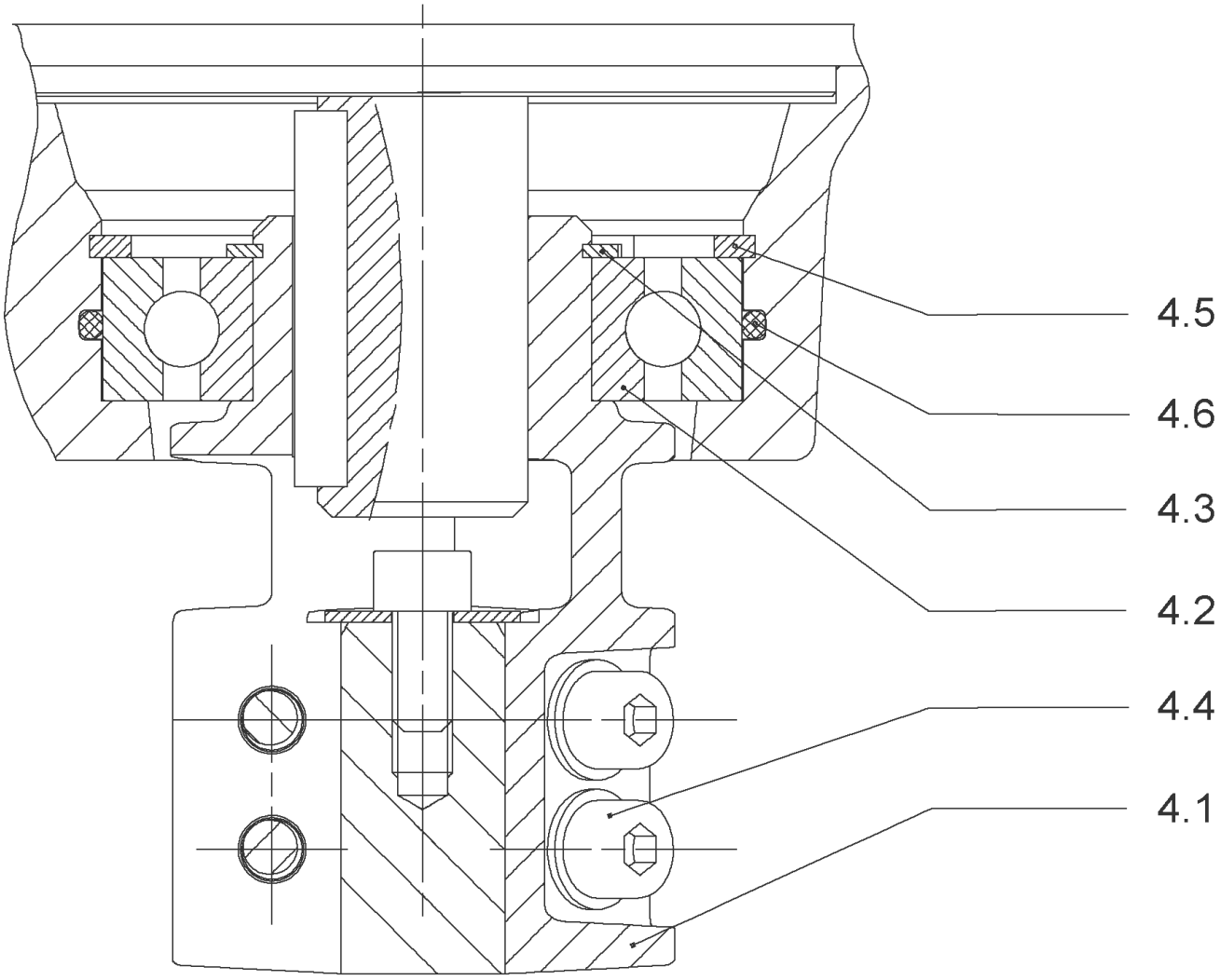
4.5
4.6
4.3
4.2
4.4
4.1

## COUPLING D.16XD.19 FT100 HELIX KIT (4159708)

| Item | Article no. | Description | Quantity |
|---|---|---|---|
| 4.1 | | COUPLING M+ Ø16XØ19 FT100 MACHINED | 1 |
| 4.2 | 2130977 | BALL BEARING 6206/ZZ-C3(HT)VP. | 1 |
| 4.3 | 4234249 | CIRCLIP-FOR-SHAFT-D30x1.5 VP. | 1 |
| 4.4 | 4212716 | SCREW M6X20 KIT (4PIECES) | 1 |
| 4.5 | 4234250 | CIRCLIP-D62x2 VP. | 1 |
| 4.6 | 4234245 | O-RING 63X3 VP. | 1 |
| | | CONTACT-WASHER-6ETR-6,1x12,2x1,8-STEEL | 1 |

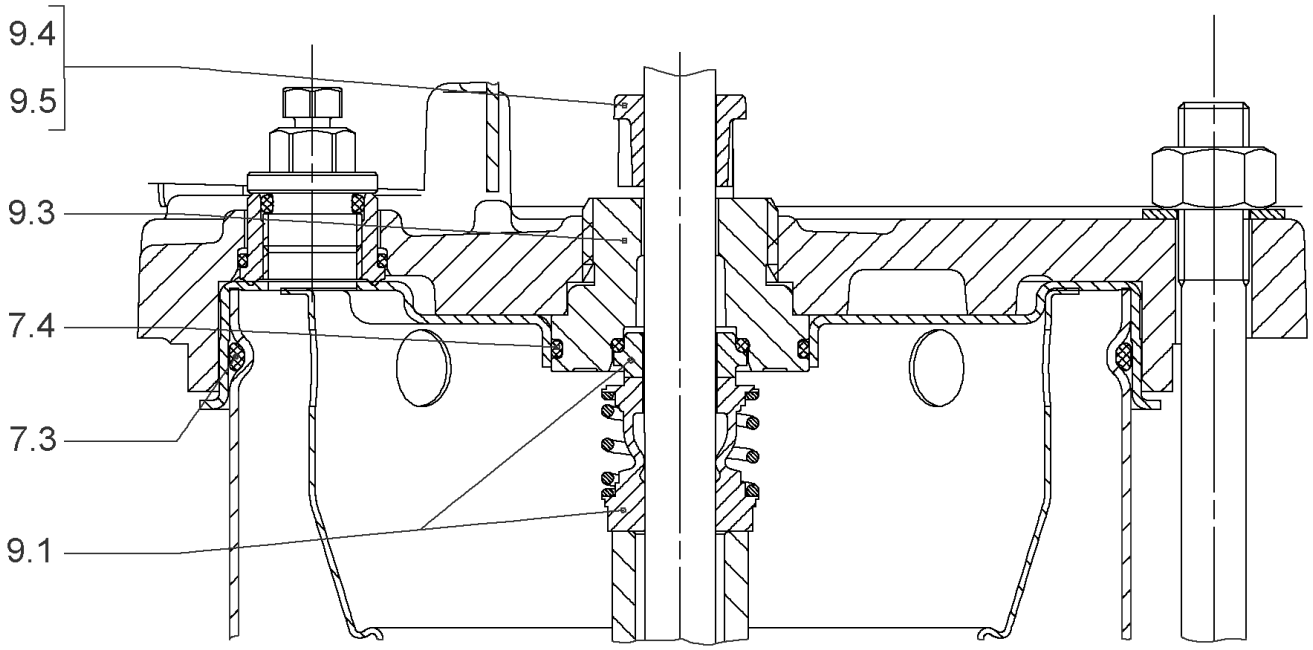
9.4
9.5
9.3
7.4
7.3
9.1

## SEAL-KIT-HELIX6-10-16 O/E KIT (4171327)

| Item | Article no. | Description | Quantity |
|---|---|---|---|
| 7.3 | 4176513 | O-RING FOR PUMP JACKET VP. | 1 |
| 7.4 | 2127603 | O-RING ID.37,6x2,4 EPDM VP. | 1 |
| 9.1 | 4177801 | MECH.SEAL HELIX6-10-16 O/E VP. | 1 |
| 9.3 | 4177798 | MACHINED RING HOLDER M+6" Ø16 304 VP. | 1 |
| 9.5 | 4177799 | MACHINED DRIVE RING Ø16 VP. | 1 |
| 9.4 | 4176520 | SCREW CH M5x5 A4-70 ( 3PIECES ) | 1 |

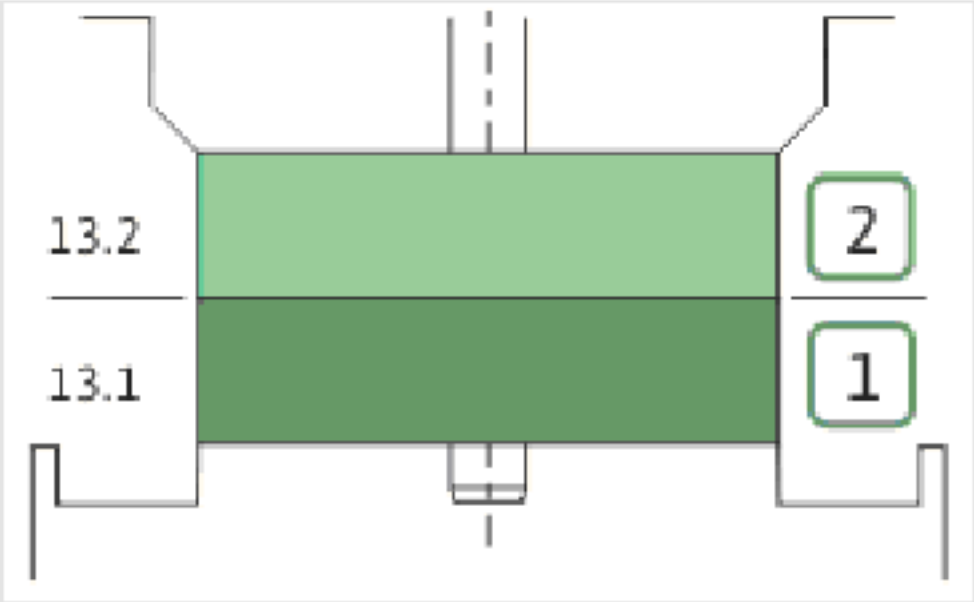
13.2
13.1
2
1

| Item | Article no. | Description | Quantity |
|---|---|---|---|
| 13.1 | 4174084 | STAGE HELIX 6 1.4301 KIT | 1 |
| | | > MACH.STG-CASING-WOGV-WNR-M+6-304 | 1 |
| | | > IMPELLER-M+6-304 | 1 |
| 13.2 | 4174089 | INTERMEDIATE STAGE HELIX 6 1.4301 KIT | 1 |
| | | > MACH.BEARING-STG-CASING-WNR-M+6-304 | 1 |
| | | > IMPELLER-M+6-304 | 1 |
| | | > SHAFT SLEEVE-SPACER-Ø19,35x18,465-304 | 1 |
| | | > SHAFT-SLEEVE-D16xD20x18-CW | 1 |

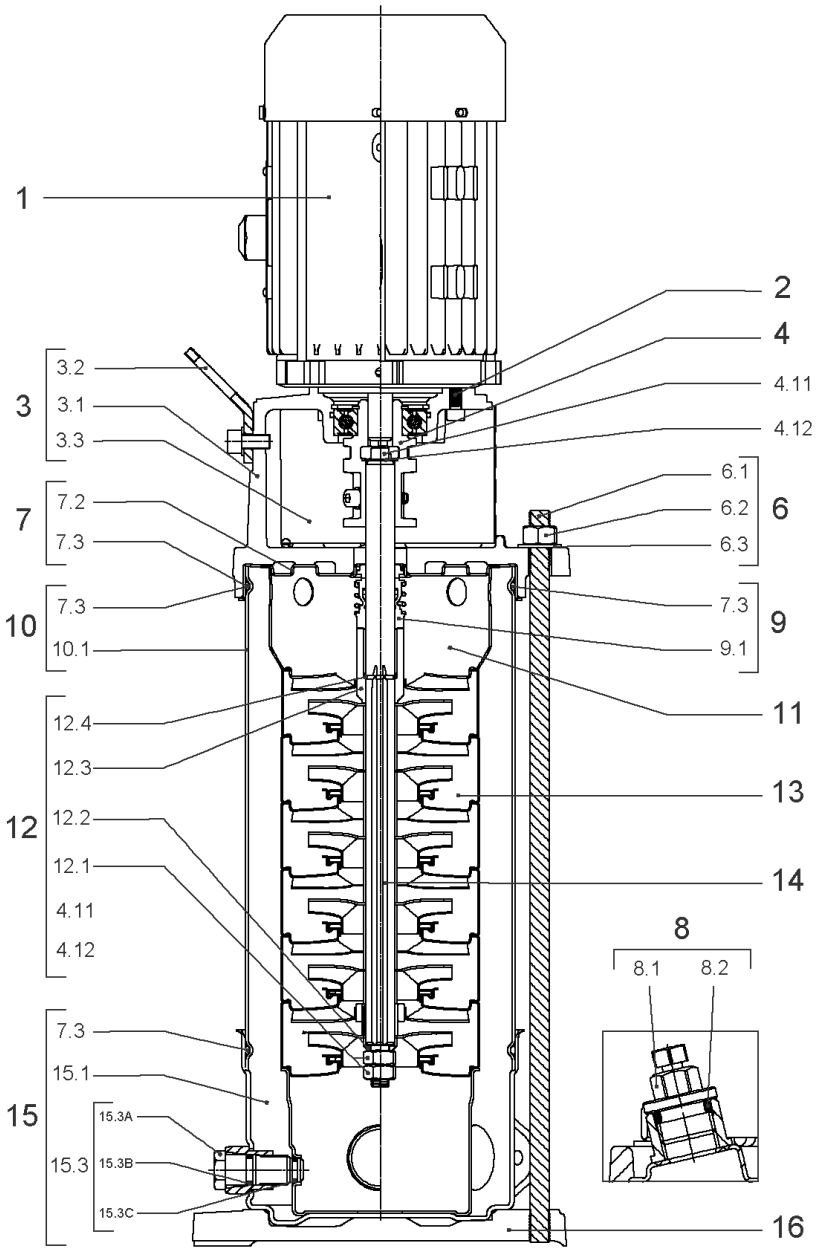
1
2
4
4.11
4.12
3
3.2
3.1
3.3
7
7.2
7.3
10
7.3
10.1
6
6.1
6.2
6.3
9
7.3
9.1
11
12
12.4
12.3
12.2
12.1
4.11
4.12
13
14
8
8.1
8.2
15
7.3
15.1
15.3
15.3A
15.3B
15.3C
16

## HELIX VE602-1/16/E/S (4201577)

| Item | Article no. | Description | Quantity |
|---|---|---|---|
| 1 | | DRIVE HELIX-VE602-IE4-WE KIT | 1 |
| Note: MOTOR BRAND WILO ELEC | | | |
| | | SPARE PARTS MOTOR:ON REQUEST | 1 |
| 2 | 4212716 | SCREW M6X20 KIT (4PIECES) | 1 |
| 3 | 4213752 | LANTERN FT100 HELIX KIT | 1 |
| 3.1 | | > LANT-MOT-VMI-ReDTC6"-FT100-MACHINED+CATA | 1 |
| 3.2 | 4184852 | > EYELET CPL.FT HELIX (2 PIECES) | 1 |
| 3.3 | 4213713 | > COUPLING PROTECTOR FT85/100 HELIX KIT | 1 |
| 4 | 4159708 | COUPLING D.16XD.19 FT100 HELIX KIT | 1 |
| 6 | 4177803 | STUD BOLT M12X263 KIT | 1 |
| 6.1 | | > TIE BOLT M12-263x18x30-1.4057 | 1 |
| 6.2 | 2094647 | > NUT M12 M12 ISO4032 VP. | 1 |
| 6.3 | 2123557 | > WASHER CS-12.4-24-1.6-NFE25 (4 PIECES) | 1 |
| 7 | 4214481 | STATIONARY RING HOLDER HELIX D27 ReDTC | 1 |
| 7.2 | 4214479 | > STATIONARY RING HOLDER HELIX D27 VP. | 1 |
| 7.3 | 4176513 | > O-RING FOR PUMP JACKET VP. | 1 |
| 8 | 4212724 | FILING/PURGING PLUG HELIX ReDTC KIT | 1 |
| 8.1 | | > FILLING PLUG MVI6"-304 | 1 |
| 8.2 | 4177800 | > O-RING EPDM PLUG HELIX VP. | 1 |
| 9 | 4214483 | MECH.SEAL HELIX6-10-16 O/E ReDTC KIT | 1 |
| 9.1 | 4177801 | > MECH.SEAL HELIX6-10-16 O/E VP. | 1 |
| 7.3 | 4176513 | > O-RING FOR PUMP JACKET VP. | 1 |
| 10 | 4177804 | HOUSING PIPES D.152X134 1.4301 KIT | 1 |
| 7.3 | 4176513 | > O-RING FOR PUMP JACKET VP. | 1 |
| 10.1 | | > HOUSING-PIPE Ø152-M+1001/02-304 | 1 |
| 11 | 4174087 | CENTERING STAGE-RETURN HELIX6 1.4301VP. | 1 |
| 12 | 4214486 | SHAFT EQUIPMENT HELIX V6 ReDTC KIT | 1 |
| 12.1 | | > NUT-H-M10-A4.70 | 1 |
| 12.2 | | > SERRATED LOCK WASHER M+6M3-316L | 1 |
| 12.3 | | > 1/2-SNAP-RING-6/10M3-316L | 1 |
| 12.4 | | > STOP-RUSH-1/2-D16xd2-M+316 | 1 |
| 4.11 | | > SCREW CHC-M6X14-8.8-ISO4762-GEOMET500A | 1 |
| 4.12 | | > WASHER D.24 L6U ZINK | 1 |
| 13 | | HYDRAULIC HELIX V 602 1.4307 | 1 |

| Item | Article no. | Description | Quantity |
|---|---|---|---|
| 14 | 4214488 | SHAFT D.16X203 HELIX 1.4057 VP. | 1 |
| 15 | 4217897 | PUMP HOUSING HELIX DN32 PN16 1.4301 KIT | 1 |
| 7.3 | 4176513 | > O-RING FOR PUMP JACKET VP. | 1 |
| 15.1 | | > BLASTING PPE HOUSING V-PN16-DN32-5"-304 | 1 |
| 15.2 | 4217891 | > COUNTER FLANGE-G1"1/4-PN16-GJL KIT | 1 |
| 15.3 | 4171321 | > PRIMING/DRAIN PLUG EPDM HELIX KIT | 1 |
| 16 | 4177964 | BASEPLATE HELIX V2/4/6 PN16 VP. | 1 |

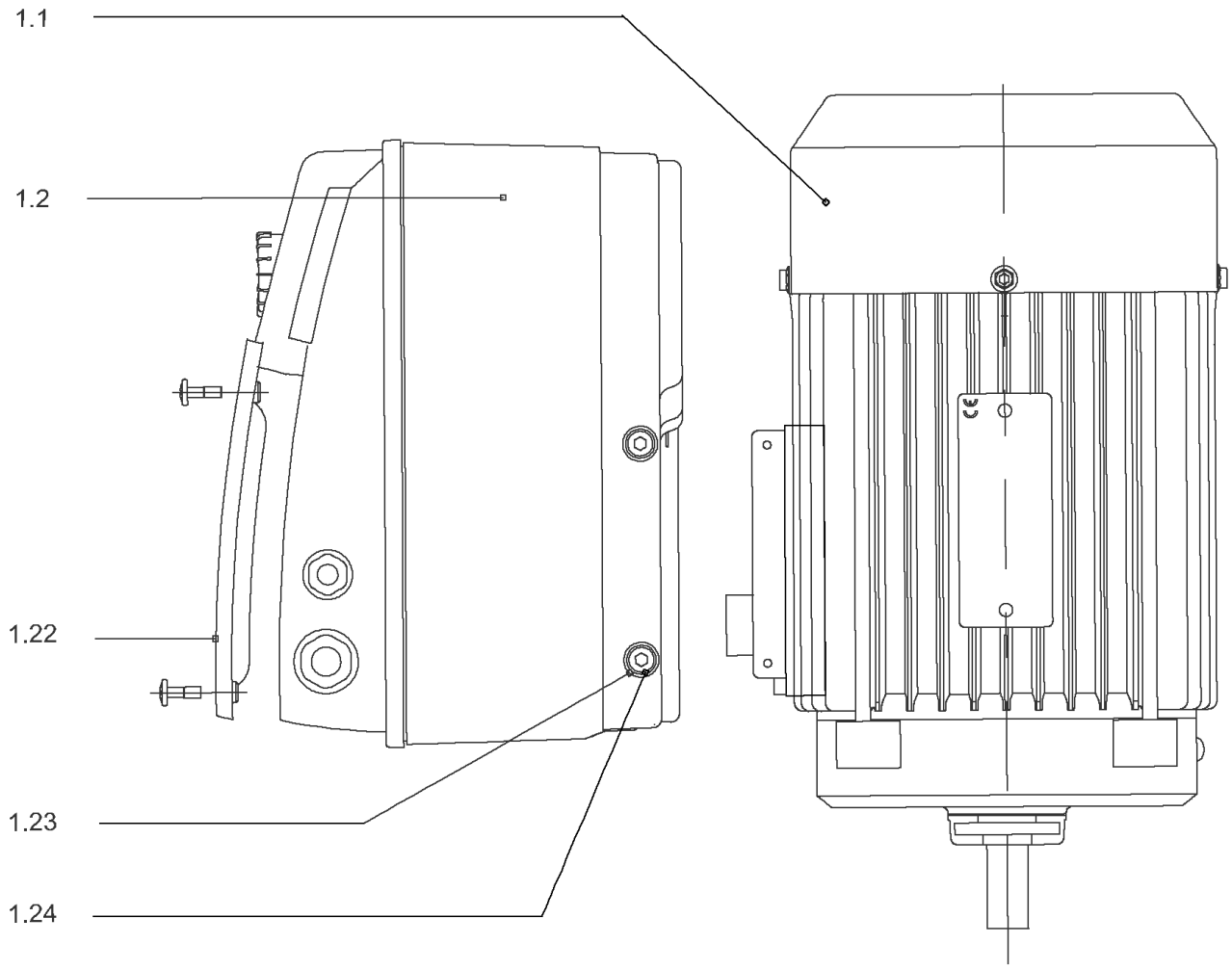
1.1
1.2
1.22
1.23
1.24

## DRIVE HELIX-VE602-IE4-WE KIT

| Item | Article no. | Description | Quantity |
|---|---|---|---|
| 1.1 | 4207914 | MOTOR 0.75/2/80 3~ 380V 60HZ IE4 WE VP. | 1 |
| | | SPARE PARTS MOTOR:ON REQUEST | 1 |
| 1.2 | 4209323 | MODULE HELIX-VE602-IE4-WE KIT | 1 |
| 1.22 | 2054372 | > MODULE COVER TL1,TL2+GASKET KIT | 1 |
| 1.23 | 4215716 | > SCREW M5X16 DIN912 8.8 A2A (4pieces) VP. | 1 |
| 1.24 | 2057978 | > RONDELLE A5,3 DIN6797 FST ZN (4 PIECES) | 1 |

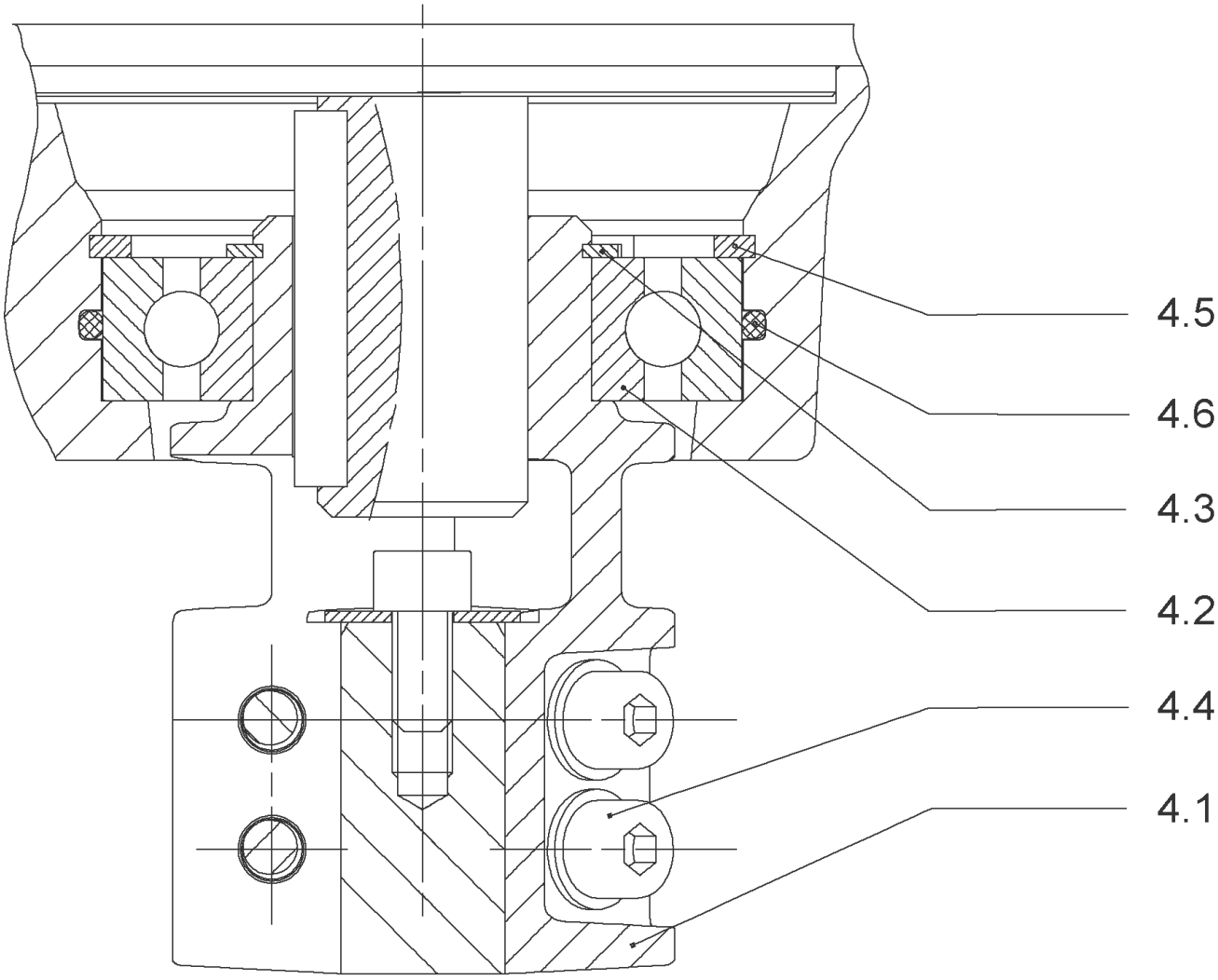
4.5
4.6
4.3
4.2
4.4
4.1

## COUPLING D.16XD.19 FT100 HELIX KIT (4159708)

| Item | Article no. | Description | Quantity |
|---|---|---|---|
| 4.1 | | COUPLING M+ Ø16XØ19 FT100 MACHINED | 1 |
| 4.2 | 2130977 | BALL BEARING 6206/ZZ-C3(HT)VP. | 1 |
| 4.3 | 4234249 | CIRCLIP-FOR-SHAFT-D30x1.5 VP. | 1 |
| 4.4 | 4212716 | SCREW M6X20 KIT (4PIECES) | 1 |
| 4.5 | 4234250 | CIRCLIP-D62x2 VP. | 1 |
| 4.6 | 4234245 | O-RING 63X3 VP. | 1 |
| | | CONTACT-WASHER-6ETR-6,1x12,2x1,8-STEEL | 1 |

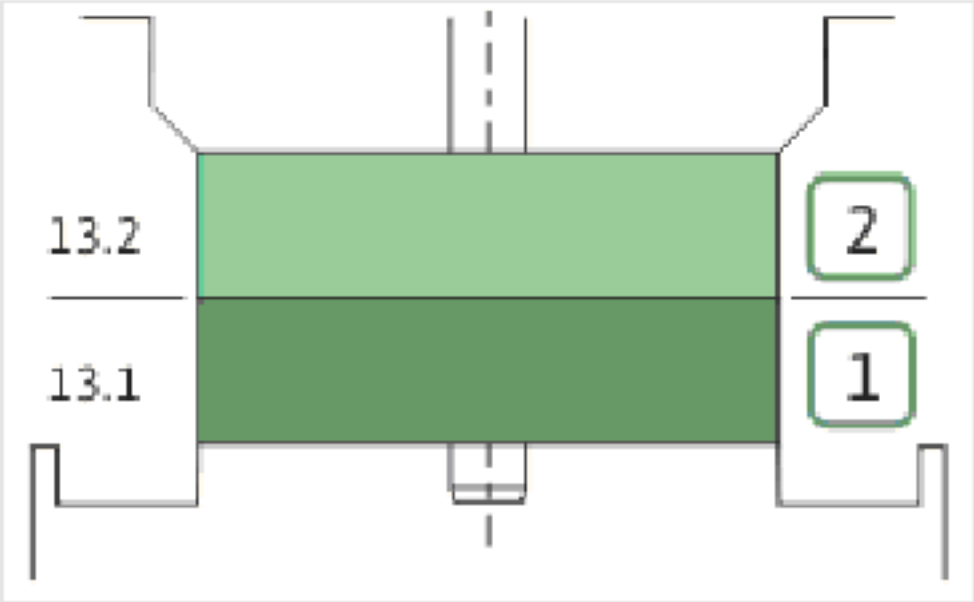
13.2
13.1
2
1

| Item | Article no. | Description | Quantity |
|---|---|---|---|
| 13.1 | 4174084 | STAGE HELIX 6 1.4301 KIT | 1 |
| | | > MACH.STG-CASING-WOGV-WNR-M+6-304 | 1 |
| | | > IMPELLER-M+6-304 | 1 |
| 13.2 | 4174089 | INTERMEDIATE STAGE HELIX 6 1.4301 KIT | 1 |
| | | > MACH.BEARING-STG-CASING-WNR-M+6-304 | 1 |
| | | > IMPELLER-M+6-304 | 1 |
| | | > SHAFT SLEEVE-SPACER-Ø19,35x18,465-304 | 1 |
| | | > SHAFT-SLEEVE-D16xD20x18-CW | 1 |

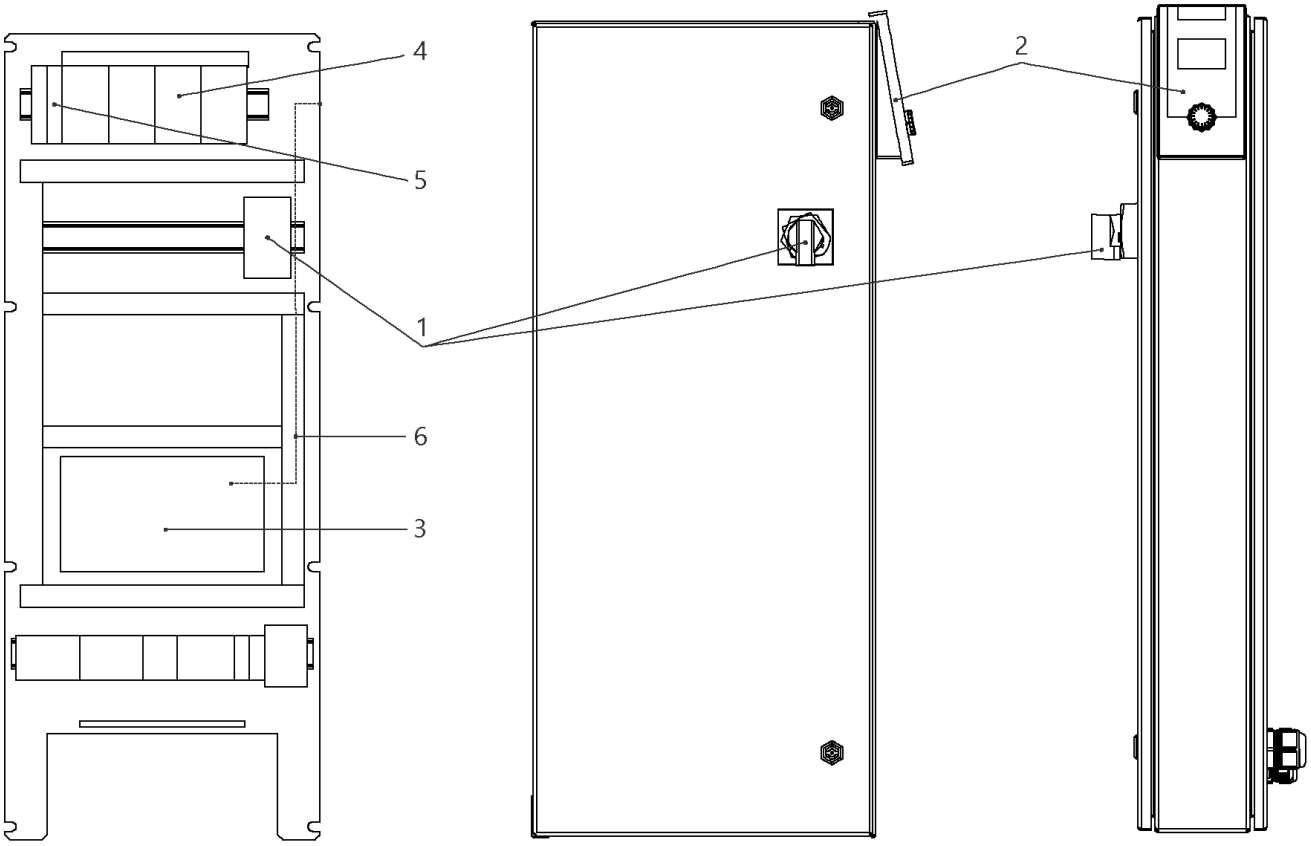
4
5
1
6
3
2

## W-CTRL-SCE-B-3x0,55-1,5KW-T4-FM-ND1

| Item | Article no. | Description | Quantity |
|---|---|---|---|
| 1 | 2104470 | MAIN SWITCH OT40F3 L250 KIT | 1 |
| 2 | 4184784 | CONTROL PANEL HMI SC KIT | 1 |
| 2 | 4185259 | ASSEMBLY DISPLAY SC PKG VP. | 1 |
| 3 | 4185257 | ASSEMBLY CPU SCe Booster VP. | 1 |
| 4 | 2051217 | AUTOM.CIRCUIT BREAKER S203 B16 TO7,5kW | 1 |
| 5 | 2046288 | CIRCUIT BREAKER S201 B16 | 1 |
| 6 | 4197081 | CABLE RJ45 CAT6 0,5M RED SC-PANEL VP. | 1 |

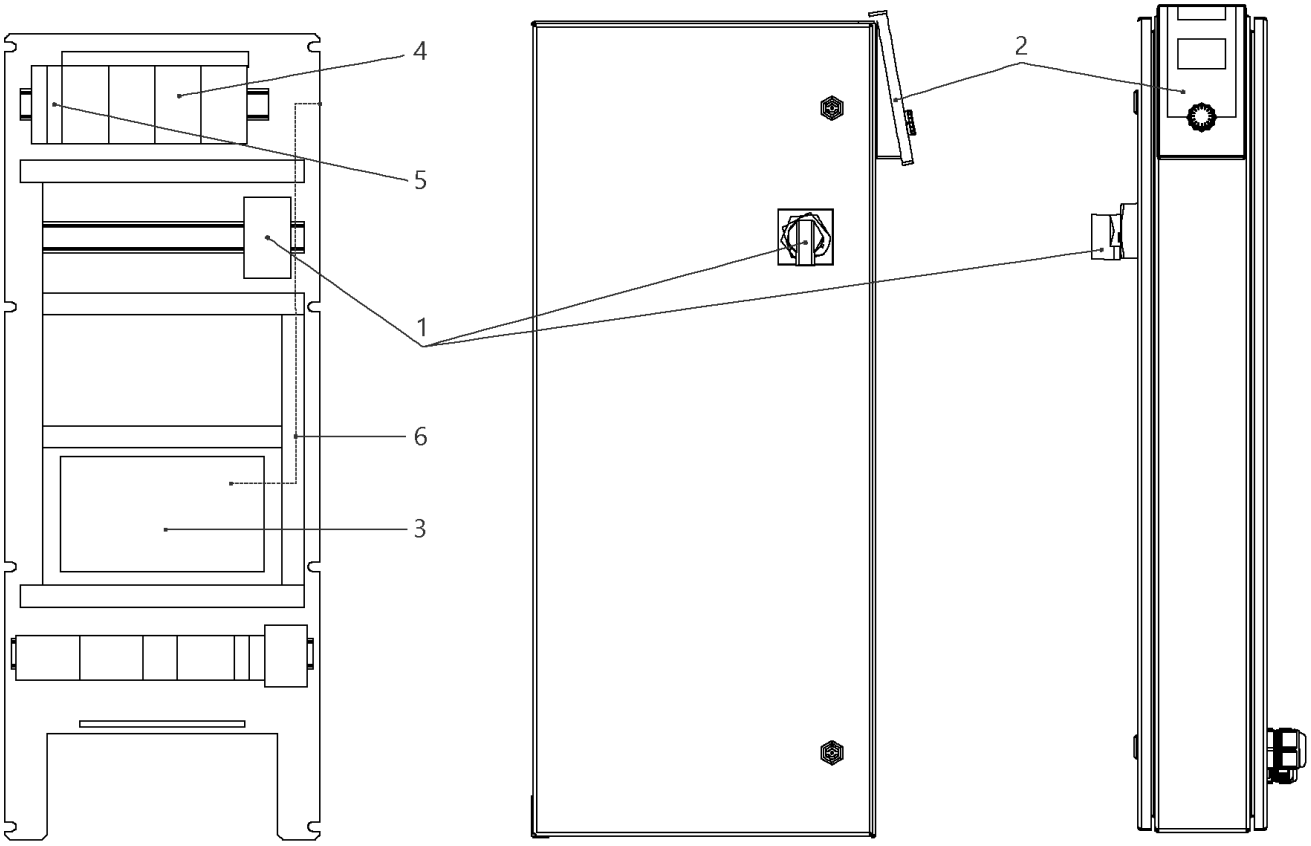
4
5
1
6
3
2

## W-CTRL-SCE-B-3x10A-T34-FM-ND1-AVC-PKG (2541914)

| Item | Article no. | Description | Quantity |
|---|---|---|---|
| 1 | 2104473 | MAIN SWITCH OT63F3 L105 KIT | 1 |
| Note: TO / BIS / JUSQU'AU 30/06/2015 | | | |
| 1 | 2104470 | MAIN SWITCH OT40F3 L250 KIT | 1 |
| Note: FROM / AB / À PARTIR DU 01/07/2015 | | | |
| 2 | 4184784 | CONTROL PANEL HMI SC KIT | 1 |
| 2 | 4185259 | ASSEMBLY DISPLAY SC PKG VP. | 1 |
| Note: DISPLAY ALONE / PLATINE SEULE | | | |
| 3 | 4185257 | ASSEMBLY CPU SCe Booster VP. | 1 |
| 4 | 2119861 | AUTOMATIC CIRCUIT BREAKER S203 B13 3POL. | 1 |
| 5 | 2046288 | CIRCUIT BREAKER S201 B16 | 1 |
| 6 | 4197081 | CABLE RJ45 CAT6 0,5M RED SC-PANEL VP. | 1 |

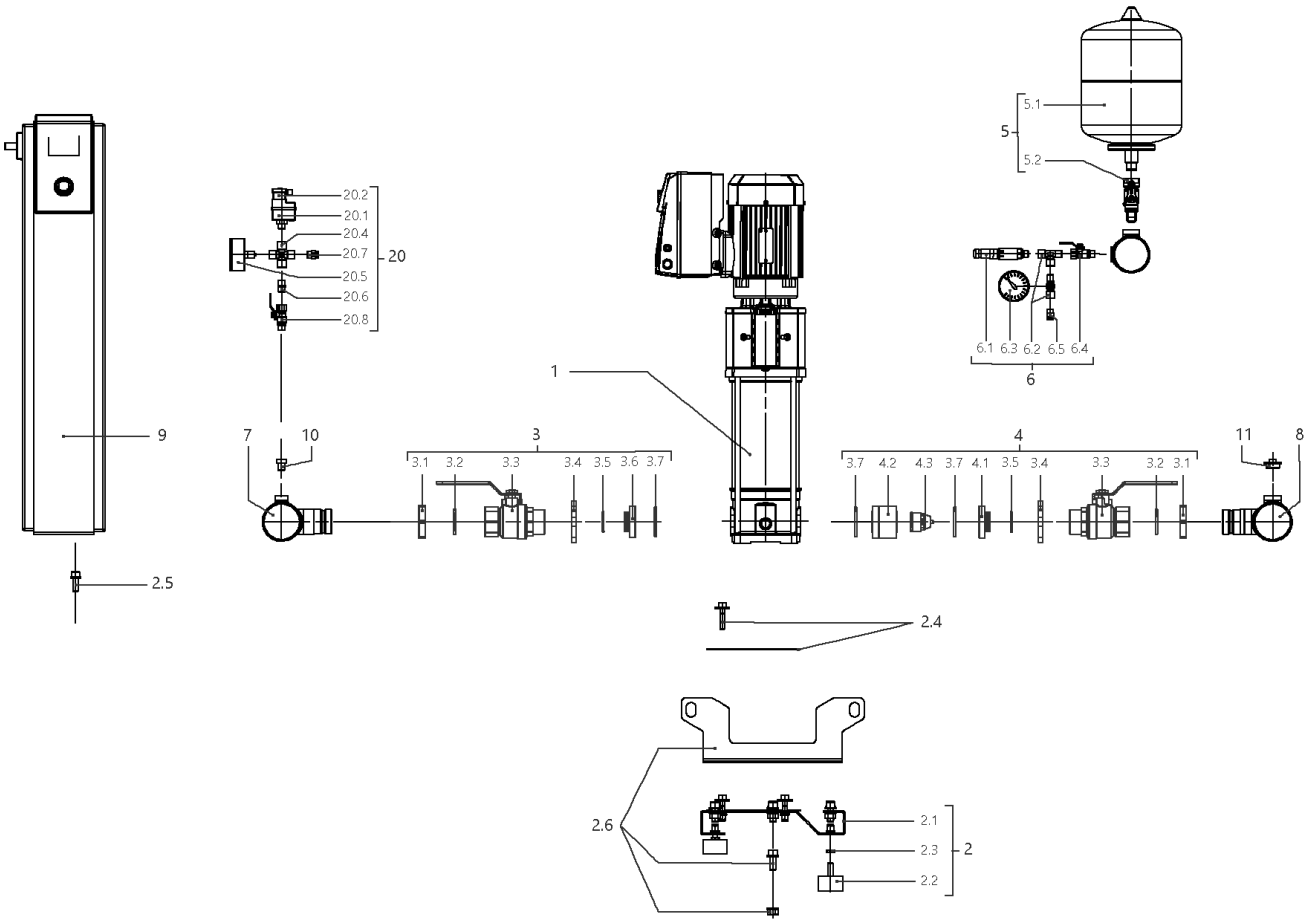
5.1
5
5.2
20.2
20.1
20.4
20.7
20
20.5
20.6
20.8
6.1 6.3 6.2 6.5 6.4
6
1
9
7
10
3
3.1 3.2 3.3 3.4 3.5 3.6 3.7
4
3.7 4.2 4.3 3.7 4.1 3.5 3.4 3.3 3.2 3.1
11
8
2.5
2.4
2.6
2.1
2.3
2
2.2

## SiBoost Smart 3HELIX VE603 (2536375)

| Item | Article no. | Description | Quantity |
|---|---|---|---|
| 1 | | HELIX VE603-1/16/E/S | 1 |
| Note: TO / BIS / JUSQU'AU 31/03/2016 | | | |
| 1 | 4201579 | HELIX VE603-1/16/E/S | 1 |
| Note: FROM / AB / À PARTIR DU 01/04/2016 | | | |
| 2 | 4200142 | BASE PLATE DE3 1150x420 KIT | 1 |
| Note: TO / BIS / JUSQU'AU 28/02/2013 | | | |
| 2.1 | | > BASEPLATE_3x4/6/10/16V_E300_BOX_150 | 1 |
| 2.2 | 2028654 | > VIBRATION DAMPER D.50X30 M10X28 | 1 |
| 2.3 | 2028281 | > NUT M10 DIN936 (ISO4035) 17H VZ | 1 |
| 2.4 | 4199875 | > HOLDER PUMP Siboost Helix V2/4 KIT | 1 |
| 2.5 | 4197084 | > HOLDER SWITCHBOX WILO Smart Control KIT | 1 |
| 2.6 | 4197117 | > LIFTING Siboost HELIX SC KIT | 1 |
| 2 | 4200137 | BASE PLATE DE3 1150x300 M10 KIT | 1 |
| Note: FROM / AB / À PARTIR DU 01/03/2013 | | | |
| 2.1 | | > BASEPLATE_3x4/6/10V_E300_1150x300BOX_150 | 1 |
| 2.2 | 2028654 | > VIBRATION DAMPER D.50X30 M10X28 | 1 |
| 2.3 | 2028281 | > NUT M10 DIN936 (ISO4035) 17H VZ | 1 |
| 2.4 | 4199875 | > HOLDER PUMP Siboost Helix V2/4 KIT | 1 |
| 2.5 | 4197084 | > HOLDER SWITCHBOX WILO Smart Control KIT | 1 |
| 2.6 | 4197085 | > LIFTING Siboost HELIX SC KIT | 1 |
| 3 | 4199876 | SUCTION SIDE Siboost Helix V2/4/6 KIT | 1 |
| 3.1 | 2032610 | > NUT G11/4 MS VP. | 1 |
| 3.2 | 2032611 | > O-RING ID.36,09X3,53N DIN3771 E7502 | 1 |
| 3.3 | 2507646 | > BALL VALVE G11/4"M-F-W.HANDLE 1/4-TURN | 1 |
| 3.4 | 2032613 | > SCREWED FLANGE G1 1/4" LK-75 ST37VZ | 1 |
| 3.5 | 2032614 | > O-RING ID.29,82X2,62N DIN3771 E7502 | 1 |
| 3.6 | 2032615 | > SPACER F.I/A KUH.DN32 CUZN | 1 |
| 3.7 | 2032616 | > O-RING ID.44X3,53N DIN3771 E7502 | 1 |
| 4 | 4199877 | DELIVERY SIDE Siboost Helix V2/4/6 KIT | 1 |
| 3.1 | 2032610 | > NUT G11/4 MS VP. | 1 |
| 3.2 | 2032611 | > O-RING ID.36,09X3,53N DIN3771 E7502 | 1 |
| 3.3 | 2507646 | > BALL VALVE G11/4"M-F-W.HANDLE 1/4-TURN | 1 |
| 3.4 | 2032613 | > SCREWED FLANGE G1 1/4" LK-75 ST37VZ | 1 |
| 3.5 | 2032614 | > O-RING ID.29,82X2,62N DIN3771 E7502 | 1 |

| Item | Article no. | Description | Quantity |
|---|---|---|---|
| 4.1 | 2058116 | > SPACER F.I/A KUH.DN32 CUZN | 1 |
| 3.7 | 2032616 | > O-RING ID.44X3,53N DIN3771 E7502 | 1 |
| 4.2 | 2058115 | > HOUSING RFV(RV-IN) DN32 SGS/DRS | 1 |
| 4.3 | 2027870 | > NON-RETURN-DEVICE INSERT DN32(MTR) | 1 |
| 5 | 2032642 | DIAPHREM TANK 8L/PN16 DIN4807/T5 KIT | 1 |
| 5.1 | 2045914 | > DIAPHREM TANK 8L TYP-DD 16BAR | 1 |
| 5.2 | 2027853 | > FLOW FITTING G3/4 FOR DIAPHRAGM VES. | 1 |
| 6 | 4197076 | PRESSURE SENSOR/ GAUGE 0-16BAR KIT | 1 |
| 6.1 | 2085909 | > PRESS.SENSOR 1/4" 0-16BAR 4-20MA VP. | 1 |
| 6.2 | 4197077 | > T-PIECE 1/4" VP. | 1 |
| 6.3 | 2028692 | > PRESSURE GAUGE NG63-PN16-G1/4 | 1 |
| 6.4 | 2028291 | > BALL TAP R1/4" PN42 GIACOMINI R254DL | 1 |
| 6.5 | 2028691 | > BLOWGUN 1/4" MS 30BAR VP. | 1 |
| 7 | 4200140 | PIPE DE3 21/2''-3x11/4"+2x1/4x900 VP. | 1 |
| 8 | 4200141 | PIPE DE3 21/2''-3x11/4"+2x1/4+1x3/4x900 | 1 |
| 9 | | W-CTRL-SCE-B-3x1,1KW-T4-FM-ND2 | 1 |
| Note: TO / BIS / JUSQU'AU 28/02/2013 | | | |
| 9 | | W-CTRL-SCE-B-3x0,55-1,5KW-T4-FM-ND1 | 1 |
| Note: FROM / AB / À PARTIR DU 01/03/2013 - TO / BIS / JUSQU'AU 18/05/2014 | | | |
| 9 | 2541914 | W-CTRL-SCE-B-3x10A-T34-FM-ND1-AVC-PKG | 1 |
| Note: FROM / AB / À PARTIR DU 19/05/2014 | | | |
| 10 | 4197079 | PLUG G1/4"x10 AISI304 KIT | 1 |
| 11 | 2032654 | PLUG R3/4" MS VIEGA 1751 | 1 |
| 20 | 2521150 | ASSEMBLY WMS. DE-EB. +VP | 1 |
| 20.1 | 2028652 | > PRESSURE SWITCH PS3-ASR 1/(1,3) VP. | 1 |
| 20.2 | 2130983 | > PLUG PS3-415 WITH KABEL 1,5M 2NO VP. | 1 |
| 20.4 | 2028290 | > CROSSPIECE R1/4" MS-NICKEL | 1 |
| 20.5 | 2028687 | > PRESSURE GAUGE NG63 R1/4" HI.0-6BAR | 1 |
| 20.6 | 2054268 | > DUAL NIPPLE G1/4" x G1/4" MS VP. | 1 |
| 20.7 | 2028691 | > BLOWGUN 1/4" MS 30BAR VP. | 1 |
| 20.8 | 2028291 | > BALL TAP R1/4" PN42 GIACOMINI R254DL | 1 |

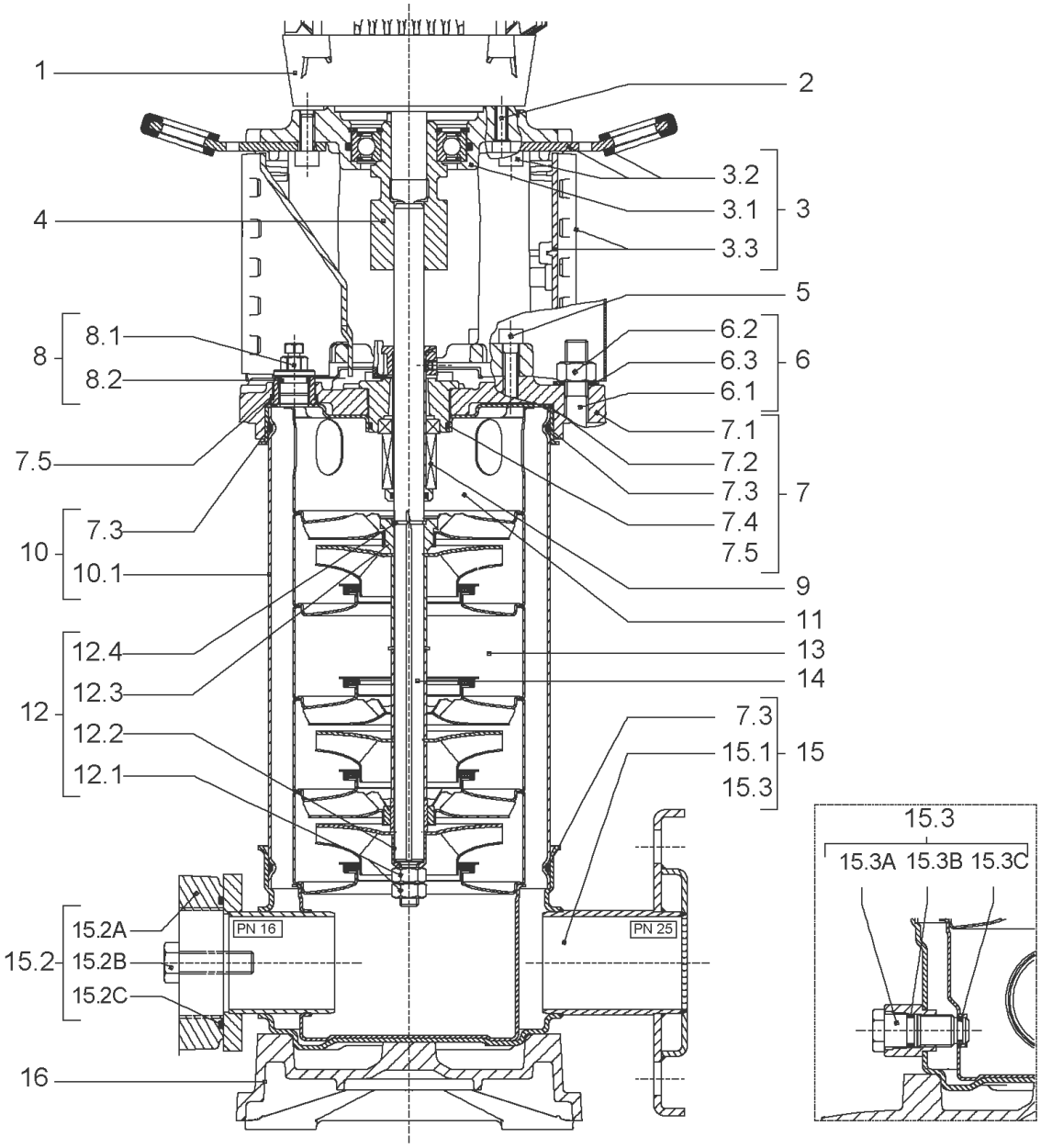
1
2
3.2
3.1
3
3.3
4
5
8.1
8
8.2
6.2
6.3
6
6.1
7.1
7.5
7.2
7.3
7
7.4
7.3
10
7.5
10.1
9
11
12.4
13
12.3
14
12
12.2
7.3
15.1
15
12.1
15.3
15.3
15.3A 15.3B 15.3C
15.2A
PN 16
PN 25
15.2
15.2B
15.2C
16

| Item | Article no. | Description | Quantity |
|---|---|---|---|
| 1 | | DRIVE HELIX-VE603-IE2-WE KIT | 1 |
| Note: MOTOR BRAND WILO ELEC | | | |
| 1 | | DRIVE HELIX-VE603-IE4-WE KIT | 1 |
| Note: MOTOR BRAND WILO ELEC | | | |
| 2 | 4159702 | SCREW M6X30 (4 PIECES) | 1 |
| 3 | 4172790 | EQUIPED LANTERN NEXIS FT 100 KIT | 1 |
| 3.1 | | > M+5_6_LANTERN_ONE-PIECE_FT100_CATA | 1 |
| 3.2 | 2127604 | > EYELET CPL.FT HELIX(2 PIECES) | 1 |
| 3.3 | 4159692 | > COUPLING PROTECTOR FT HELIX KIT | 1 |
| 4 | 4159708 | COUPLING D.16XD.19 FT100 HELIX KIT | 1 |
| 5 | 4159707 | SCREW M8X30 (4 PIECES) | 1 |
| 6 | 4177812 | STUD BOLT M12X300KIT | 1 |
| 6.1 | | > TIE BOLT M12-300x18x30-1.4057 | 1 |
| 6.2 | 2094647 | > NUT M12 M12 ISO4032 VP. | 1 |
| 6.3 | 2123557 | > WASHER CS-12.4-24-1.6-NFE25 (4 PIECES) | 1 |
| 7 | 4210143 | STATIONARY RING HOLDER HELIX 6" EPDM | 1 |
| 7.2 | 2127607 | > STATIONARY RING HOLDER 6" HELIX 1.4301 V | 1 |
| 7.3 | 4176513 | > O-RING FOR PUMP JACKET VP. | 1 |
| 7.4 | 2127603 | > O-RING ID.37,6x2,4 EPDM VP. | 1 |
| 7.5 | 2127602 | > O-RING ID.21,35x2 EPDM VP. | 1 |
| 8 | 4159686 | FILING/PURGING PLUG HELIX EPDM KIT | 1 |
| 9 | 4171327 | SEAL-KIT-HELIX6-10-16 O/E KIT | 1 |
| 10 | 4177813 | HOUSING PIPE D.152x172 1.4301 KIT | 1 |
| 7.3 | 4176513 | > O-RING FOR PUMP JACKET VP. | 1 |
| 10.1 | | > HOUSING-PIPE Ø152-M+1003-304 | 1 |
| 11 | 4174087 | CENTERING STAGE-RETURN HELIX6 1.4301VP. | 1 |
| 12 | 4174086 | SHAFTS EQUIPMENT HELIX V6 MONOBLOC KIT | 1 |
| 12.1 | | > NUT-H-M10-A4.70 | 1 |
| 12.2 | | > SERRATED LOCK WASHER M+6M3-316L | 1 |
| 12.3 | | > IMPELLER STOP RING L33,2-304 | 1 |
| 12.4 | | > STOP-RUSH-1/2-D16xd2-M+316 | 1 |
| 13 | | HYDRAULIC HELIX V 603 1.4307 | 1 |
| 14 | 4177815 | SHAFT D.16X292,5 1.4301 VP. | 1 |
| 15 | 4217897 | PUMP HOUSING HELIX DN32 PN16 1.4301 KIT | 1 |

| Item | Article no. | Description | Quantity |
|---|---|---|---|
| 7.3 | 4176513 | > O-RING FOR PUMP JACKET VP. | 1 |
| 15.1 | | > BLASTING PPE HOUSING V-PN16-DN32-5"-304 | 1 |
| 15.2 | 4217891 | > COUNTER FLANGE-G1"1/4-PN16-GJL KIT | 1 |
| 15.3 | 4171321 | > PRIMING/DRAIN PLUG EPDM HELIX KIT | 1 |
| 16 | 4177964 | BASEPLATE HELIX V2/4/6 PN16 VP. | 1 |

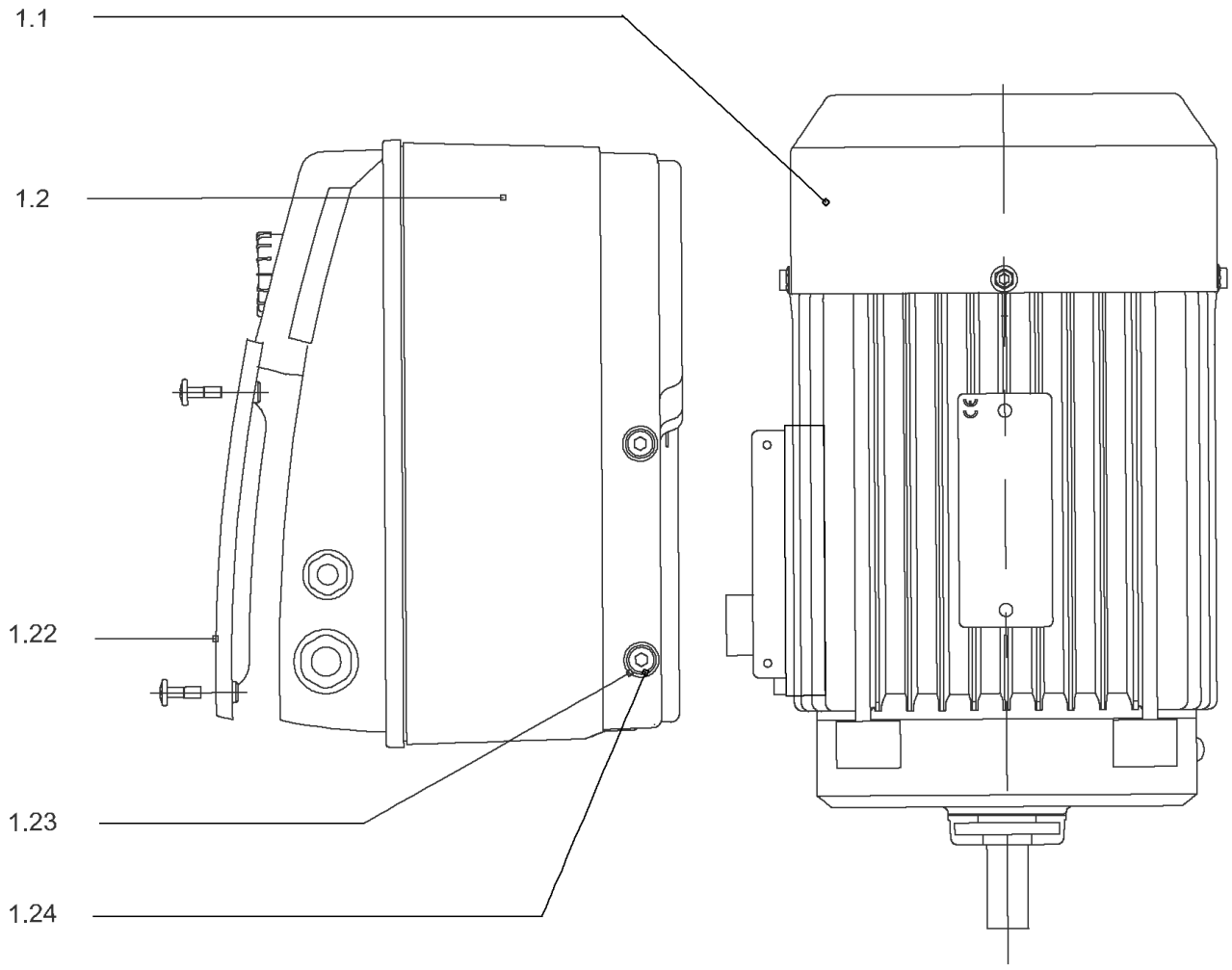
1.1
1.2
1.22
1.23
1.24

## DRIVE HELIX-VE603-IE2-WE KIT

| Item | Article no. | Description | Quantity |
|---|---|---|---|
| 1.1 | 4184817 | MOTOR 1,1/2/80 3~ 380V 60HZ IE2 WE VP. | 1 |
| | | SPARE PARTS MOTOR:ON REQUEST | 1 |
| 1.2 | 4186766 | MODULE HELIX-VE603-IE2-WE KIT | 1 |
| 1.22 | 2054372 | > MODULE COVER TL1,TL2+GASKET KIT | 1 |
| 1.23 | 4215716 | > SCREW M5X16 DIN912 8.8 A2A (4pieces) VP. | 1 |
| 1.24 | 2057978 | > RONDELLE A5,3 DIN6797 FST ZN (4 PIECES) | 1 |

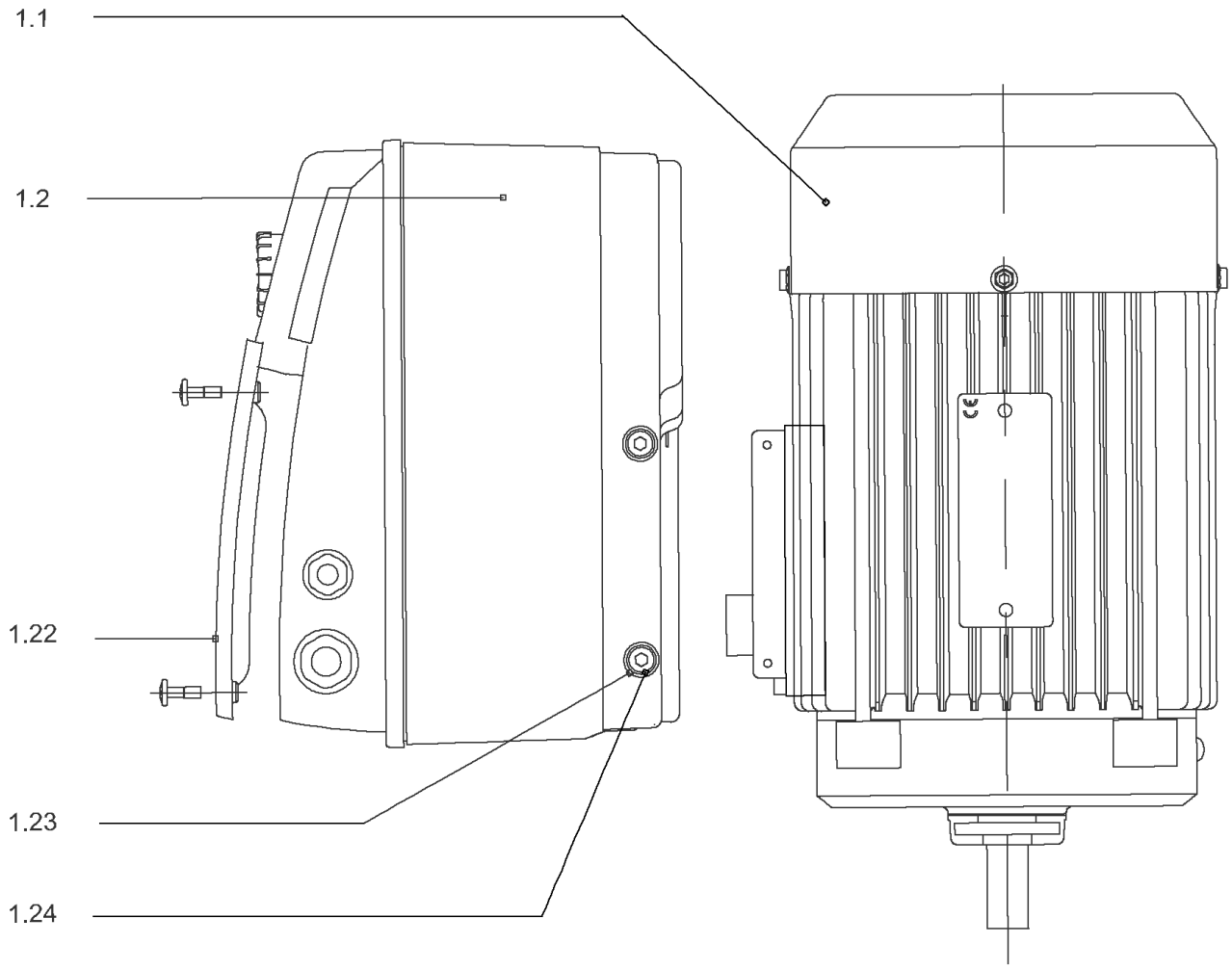
1.1
1.2
1.22
1.23
1.24

## DRIVE HELIX-VE603-IE4-WE KIT

| Item | Article no. | Description | Quantity |
|---|---|---|---|
| 1.1 | 4207916 | MOTOR 1.1/2/80 3~ 380V 60HZ IE4 WE VP. | 1 |
| | | SPARE PARTS MOTOR:ON REQUEST | 1 |
| 1.2 | 4209599 | MODULE HELIX-VE603-IE4-WE KIT | 1 |
| 1.22 | 2054372 | > MODULE COVER TL1,TL2+GASKET KIT | 1 |
| 1.23 | 4215716 | > SCREW M5X16 DIN912 8.8 A2A (4pieces) VP. | 1 |
| 1.24 | 2057978 | > RONDELLE A5,3 DIN6797 FST ZN (4 PIECES) | 1 |

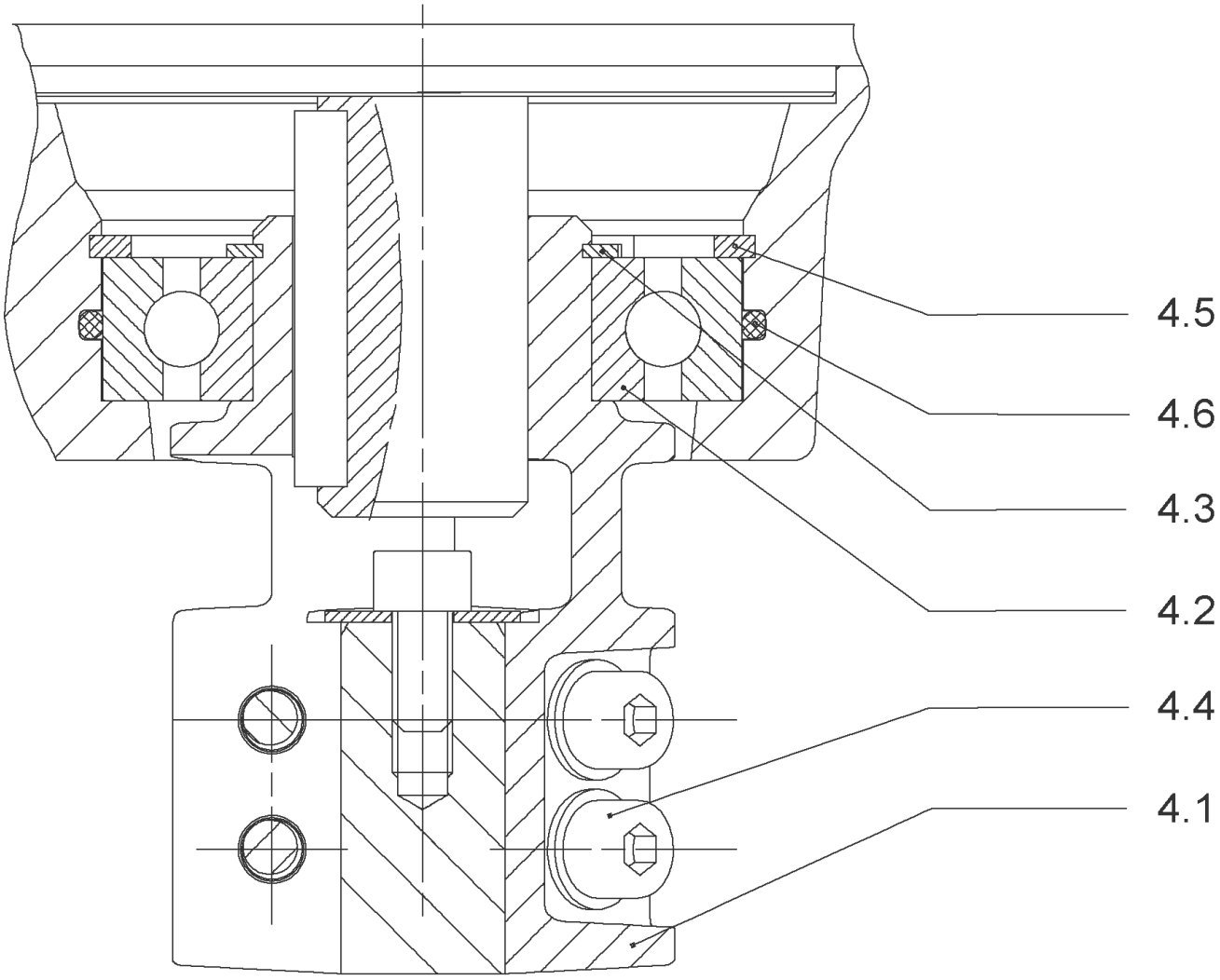
4.5
4.6
4.3
4.2
4.4
4.1

## COUPLING D.16XD.19 FT100 HELIX KIT (4159708)

| Item | Article no. | Description | Quantity |
|---|---|---|---|
| 4.1 | | COUPLING M+ Ø16XØ19 FT100 MACHINED | 1 |
| 4.2 | 2130977 | BALL BEARING 6206/ZZ-C3(HT)VP. | 1 |
| 4.3 | 4234249 | CIRCLIP-FOR-SHAFT-D30x1.5 VP. | 1 |
| 4.4 | 4212716 | SCREW M6X20 KIT (4PIECES) | 1 |
| 4.5 | 4234250 | CIRCLIP-D62x2 VP. | 1 |
| 4.6 | 4234245 | O-RING 63X3 VP. | 1 |
| | | CONTACT-WASHER-6ETR-6,1x12,2x1,8-STEEL | 1 |

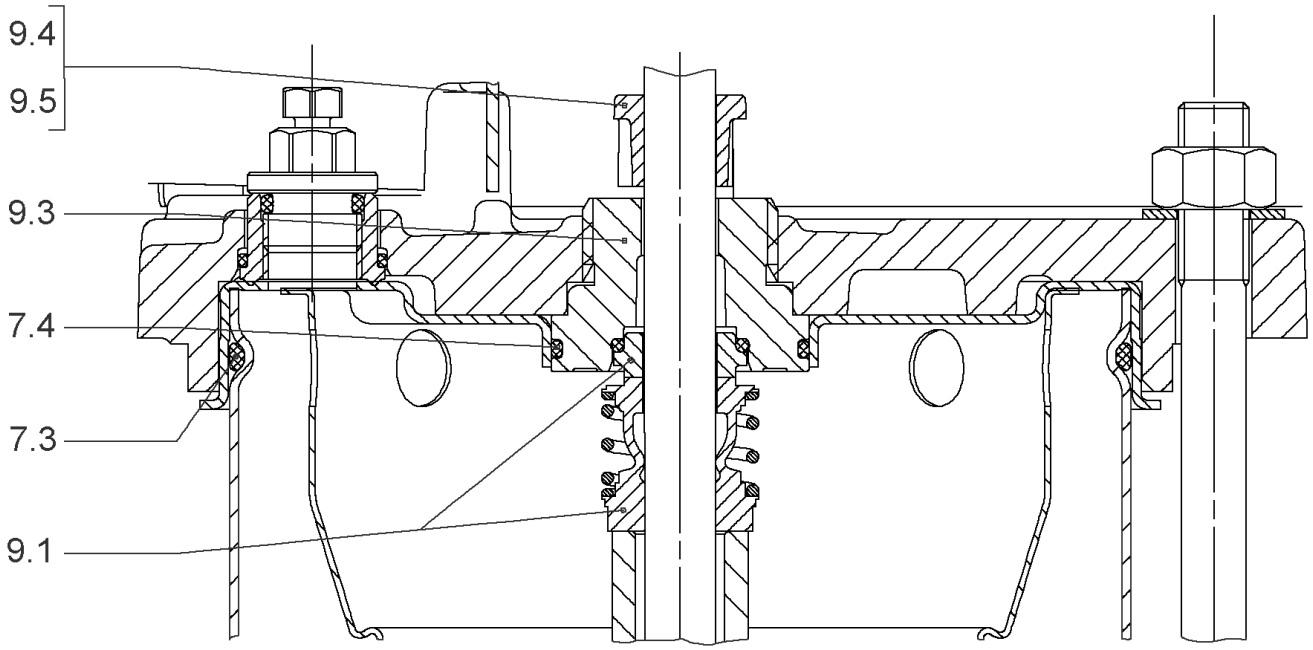
9.4
9.5
9.3
7.4
7.3
9.1

## SEAL-KIT-HELIX6-10-16 O/E KIT (4171327)

| Item | Article no. | Description | Quantity |
|---|---|---|---|
| 7.3 | 4176513 | O-RING FOR PUMP JACKET VP. | 1 |
| 7.4 | 2127603 | O-RING ID.37,6x2,4 EPDM VP. | 1 |
| 9.1 | 4177801 | MECH.SEAL HELIX6-10-16 O/E VP. | 1 |
| 9.3 | 4177798 | MACHINED RING HOLDER M+6" Ø16 304 VP. | 1 |
| 9.5 | 4177799 | MACHINED DRIVE RING Ø16 VP. | 1 |
| 9.4 | 4176520 | SCREW CH M5x5 A4-70 ( 3PIECES ) | 1 |

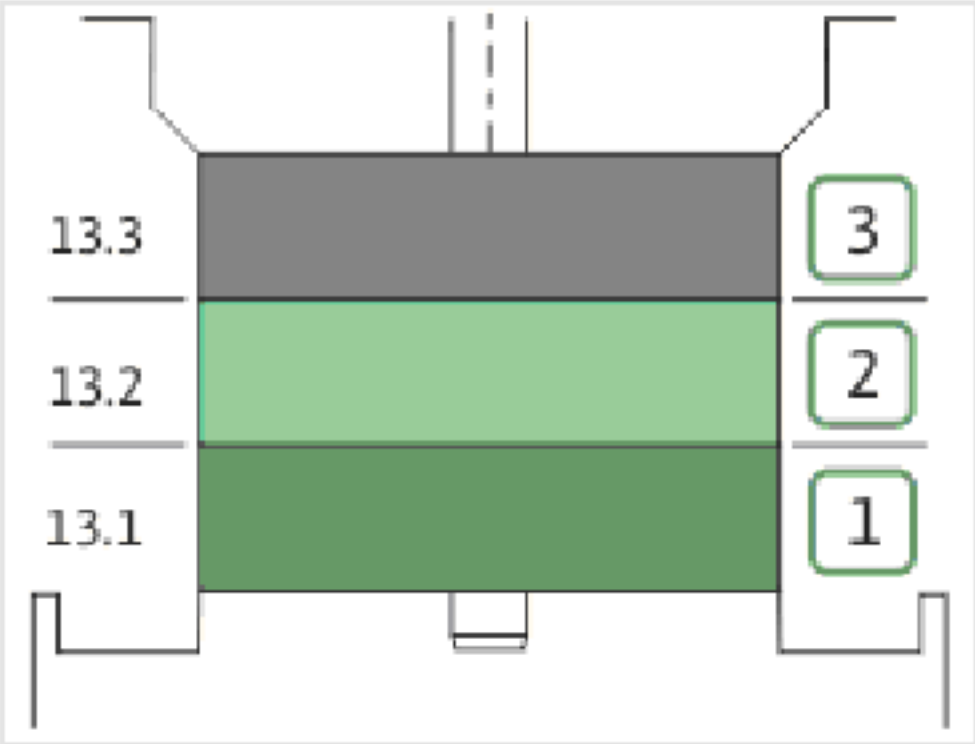
13.3
13.2
13.1
3
2
1

| Item | Article no. | Description | Quantity |
|---|---|---|---|
| 13.1 | 4174084 | STAGE HELIX 6 1.4301 KIT | 1 |
| | | > MACH.STG-CASING-WOGV-WNR-M+6-304 | 1 |
| | | > IMPELLER-M+6-304 | 1 |
| 13.2 | 4174089 | INTERMEDIATE STAGE HELIX 6 1.4301 KIT | 1 |
| | | > MACH.BEARING-STG-CASING-WNR-M+6-304 | 1 |
| | | > IMPELLER-M+6-304 | 1 |
| | | > SHAFT SLEEVE-SPACER-Ø19,35x18,465-304 | 1 |
| | | > SHAFT-SLEEVE-D16xD20x18-CW | 1 |
| 13.3 | 4174090 | INTERMEDIATE STAGE HELIX 6 1.4301 KIT | 1 |
| | | > MACH.STD-STG-CASING-WGV+NR-M+6-304 | 1 |
| | | > IMPELLER-M+6-304 | 1 |
| | | > IMPELLER SPACER Ø16,05X19,45-L36,465-304 | 1 |

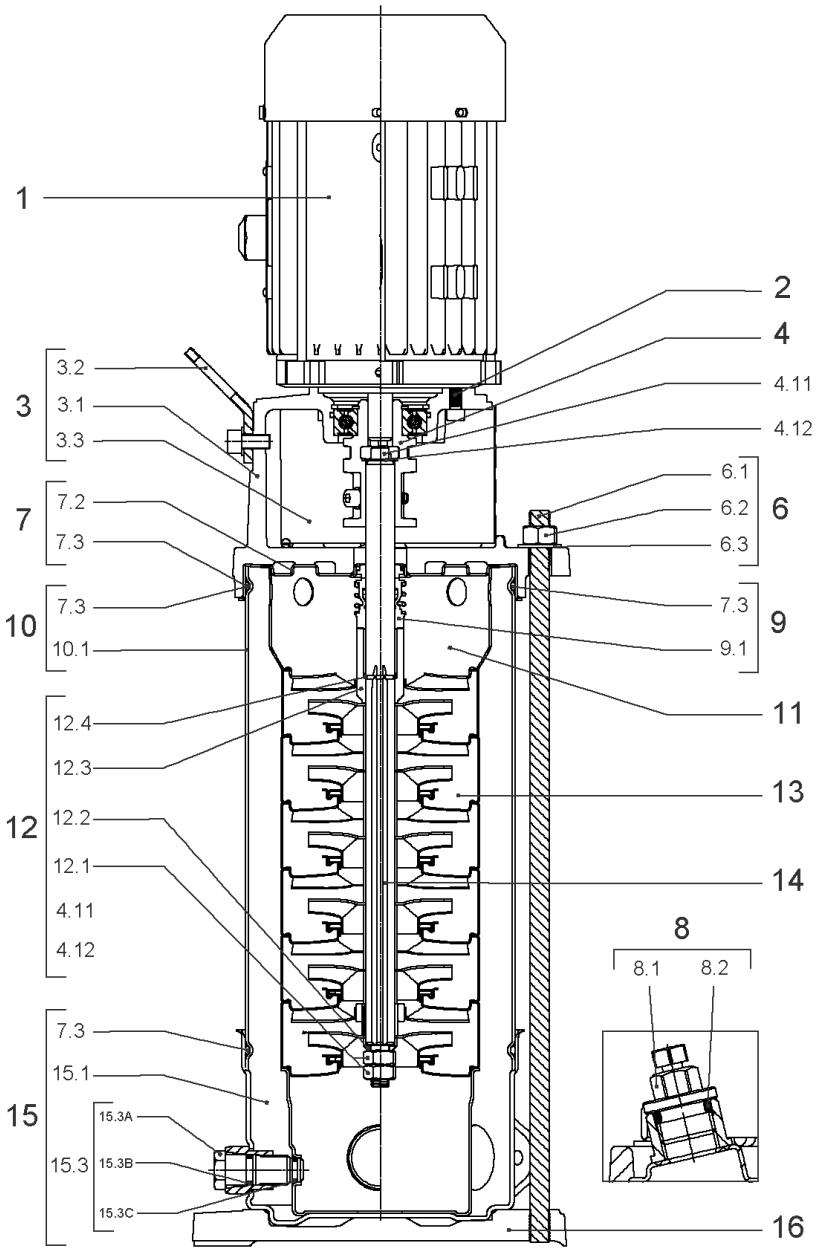
1
2
4
4.11
4.12
3
3.2
3.1
3.3
7
7.2
7.3
10
7.3
10.1
6
6.1
6.2
6.3
9
7.3
9.1
11
12
12.4
12.3
12.2
12.1
4.11
4.12
13
14
8
8.1
8.2
15
7.3
15.1
15.3
15.3A
15.3B
15.3C
16

## HELIX VE603-1/16/E/S (4201579)

| Item | Article no. | Description | Quantity |
|---|---|---|---|
| 1 | | DRIVE HELIX-VE603-IE4-WE KIT | 1 |
| Note: MOTOR BRAND WILO ELEC | | | |
| | | SPARE PARTS MOTOR:ON REQUEST | 1 |
| 2 | 4212716 | SCREW M6X20 KIT (4PIECES) | 1 |
| 3 | 4213752 | LANTERN FT100 HELIX KIT | 1 |
| 3.1 | | > LANT-MOT-VMI-ReDTC6"-FT100-MACHINED+CATA | 1 |
| 3.2 | 4184852 | > EYELET CPL.FT HELIX (2 PIECES) | 1 |
| 3.3 | 4213713 | > COUPLING PROTECTOR FT85/100 HELIX KIT | 1 |
| 4 | 4159708 | COUPLING D.16XD.19 FT100 HELIX KIT | 1 |
| 6 | 4177812 | STUD BOLT M12X300KIT | 1 |
| 6.1 | | > TIE BOLT M12-300x18x30-1.4057 | 1 |
| 6.2 | 2094647 | > NUT M12 M12 ISO4032 VP. | 1 |
| 6.3 | 2123557 | > WASHER CS-12.4-24-1.6-NFE25 (4 PIECES) | 1 |
| 7 | 4214481 | STATIONARY RING HOLDER HELIX D27 ReDTC | 1 |
| 7.2 | 4214479 | > STATIONARY RING HOLDER HELIX D27 VP. | 1 |
| 7.3 | 4176513 | > O-RING FOR PUMP JACKET VP. | 1 |
| 8 | 4212724 | FILING/PURGING PLUG HELIX ReDTC KIT | 1 |
| 8.1 | | > FILLING PLUG MVI6"-304 | 1 |
| 8.2 | 4177800 | > O-RING EPDM PLUG HELIX VP. | 1 |
| 9 | 4214483 | MECH.SEAL HELIX6-10-16 O/E ReDTC KIT | 1 |
| 9.1 | 4177801 | > MECH.SEAL HELIX6-10-16 O/E VP. | 1 |
| 7.3 | 4176513 | > O-RING FOR PUMP JACKET VP. | 1 |
| 10 | 4177813 | HOUSING PIPE D.152x172 1.4301 KIT | 1 |
| 7.3 | 4176513 | > O-RING FOR PUMP JACKET VP. | 1 |
| 10.1 | | > HOUSING-PIPE Ø152-M+1003-304 | 1 |
| 11 | 4174087 | CENTERING STAGE-RETURN HELIX6 1.4301VP. | 1 |
| 12 | 4214486 | SHAFT EQUIPMENT HELIX V6 ReDTC KIT | 1 |
| 12.1 | | > NUT-H-M10-A4.70 | 1 |
| 12.2 | | > SERRATED LOCK WASHER M+6M3-316L | 1 |
| 12.3 | | > 1/2-SNAP-RING-6/10M3-316L | 1 |
| 12.4 | | > STOP-RUSH-1/2-D16xd2-M+316 | 1 |
| 4.11 | | > SCREW CHC-M6X14-8.8-ISO4762-GEOMET500A | 1 |
| 4.12 | | > WASHER D.24 L6U ZINK | 1 |
| 13 | | HYDRAULIC HELIX V 603 1.4307 | 1 |

| Item | Article no. | Description | Quantity |
|---|---|---|---|
| 14 | 4214493 | SHAFT D.16X241 HELIX 1.4057 VP. | 1 |
| 15 | 4217897 | PUMP HOUSING HELIX DN32 PN16 1.4301 KIT | 1 |
| 7.3 | 4176513 | > O-RING FOR PUMP JACKET VP. | 1 |
| 15.1 | | > BLASTING PPE HOUSING V-PN16-DN32-5"-304 | 1 |
| 15.2 | 4217891 | > COUNTER FLANGE-G1"1/4-PN16-GJL KIT | 1 |
| 15.3 | 4171321 | > PRIMING/DRAIN PLUG EPDM HELIX KIT | 1 |
| 16 | 4177964 | BASEPLATE HELIX V2/4/6 PN16 VP. | 1 |

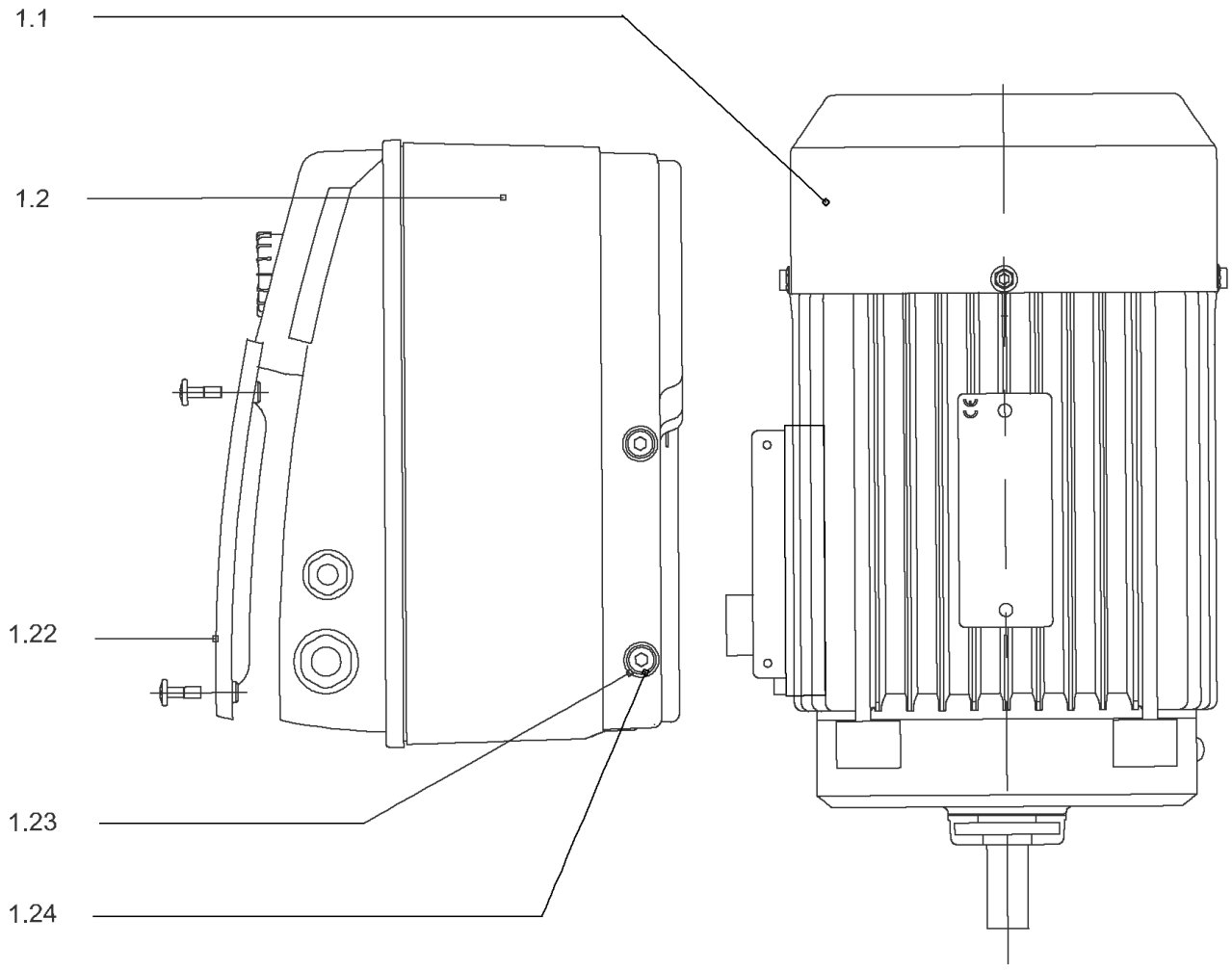
1.1
1.2
1.22
1.23
1.24

## DRIVE HELIX-VE603-IE4-WE KIT

| Item | Article no. | Description | Quantity |
|---|---|---|---|
| 1.1 | 4207916 | MOTOR 1.1/2/80 3~ 380V 60HZ IE4 WE VP. | 1 |
| | | SPARE PARTS MOTOR:ON REQUEST | 1 |
| 1.2 | 4209599 | MODULE HELIX-VE603-IE4-WE KIT | 1 |
| 1.22 | 2054372 | > MODULE COVER TL1,TL2+GASKET KIT | 1 |
| 1.23 | 4215716 | > SCREW M5X16 DIN912 8.8 A2A (4pieces) VP. | 1 |
| 1.24 | 2057978 | > RONDELLE A5,3 DIN6797 FST ZN (4 PIECES) | 1 |

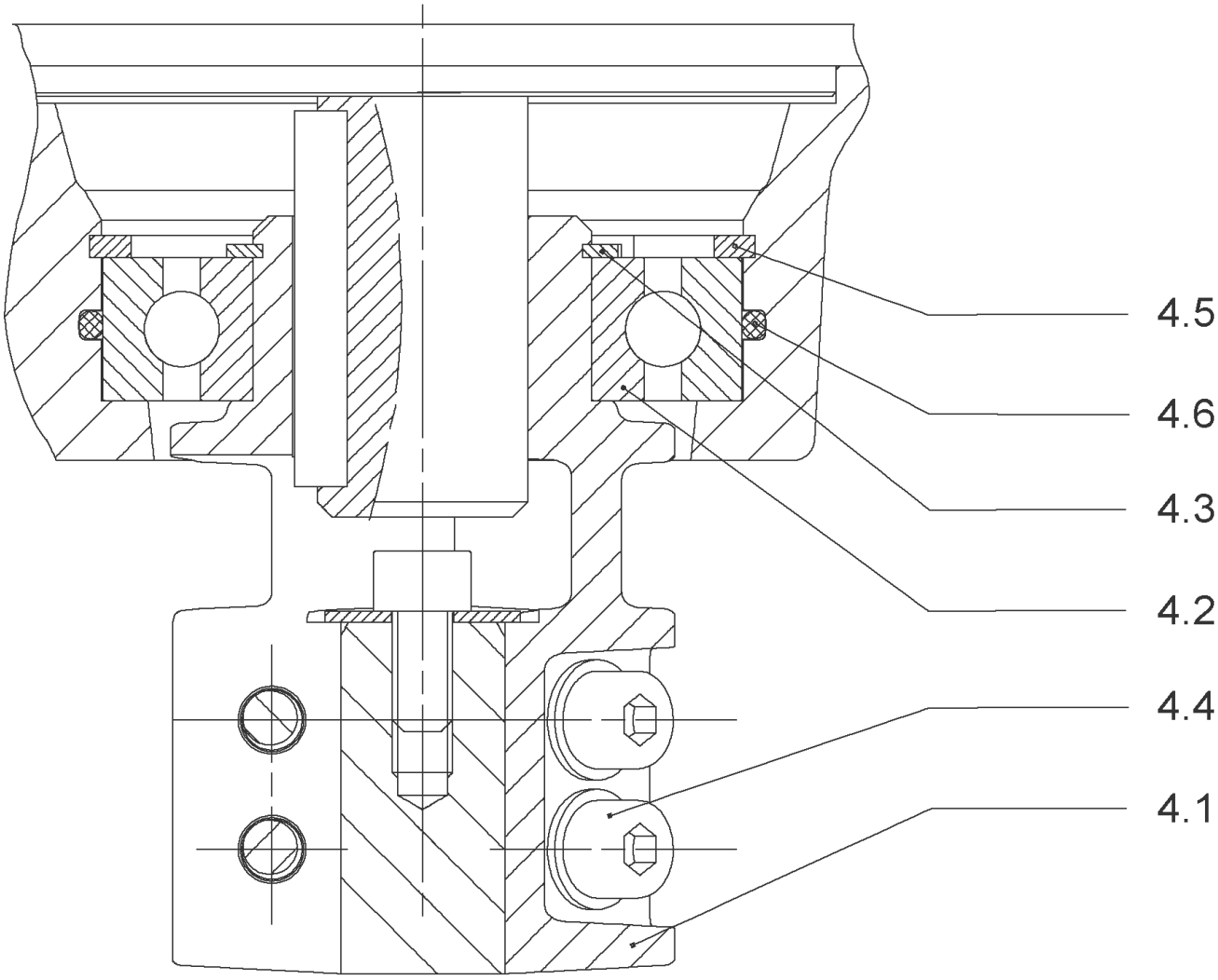
4.5
4.6
4.3
4.2
4.4
4.1

## COUPLING D.16XD.19 FT100 HELIX KIT (4159708)

| Item | Article no. | Description | Quantity |
|---|---|---|---|
| 4.1 | | COUPLING M+ Ø16XØ19 FT100 MACHINED | 1 |
| 4.2 | 2130977 | BALL BEARING 6206/ZZ-C3(HT)VP. | 1 |
| 4.3 | 4234249 | CIRCLIP-FOR-SHAFT-D30x1.5 VP. | 1 |
| 4.4 | 4212716 | SCREW M6X20 KIT (4PIECES) | 1 |
| 4.5 | 4234250 | CIRCLIP-D62x2 VP. | 1 |
| 4.6 | 4234245 | O-RING 63X3 VP. | 1 |
| | | CONTACT-WASHER-6ETR-6,1x12,2x1,8-STEEL | 1 |

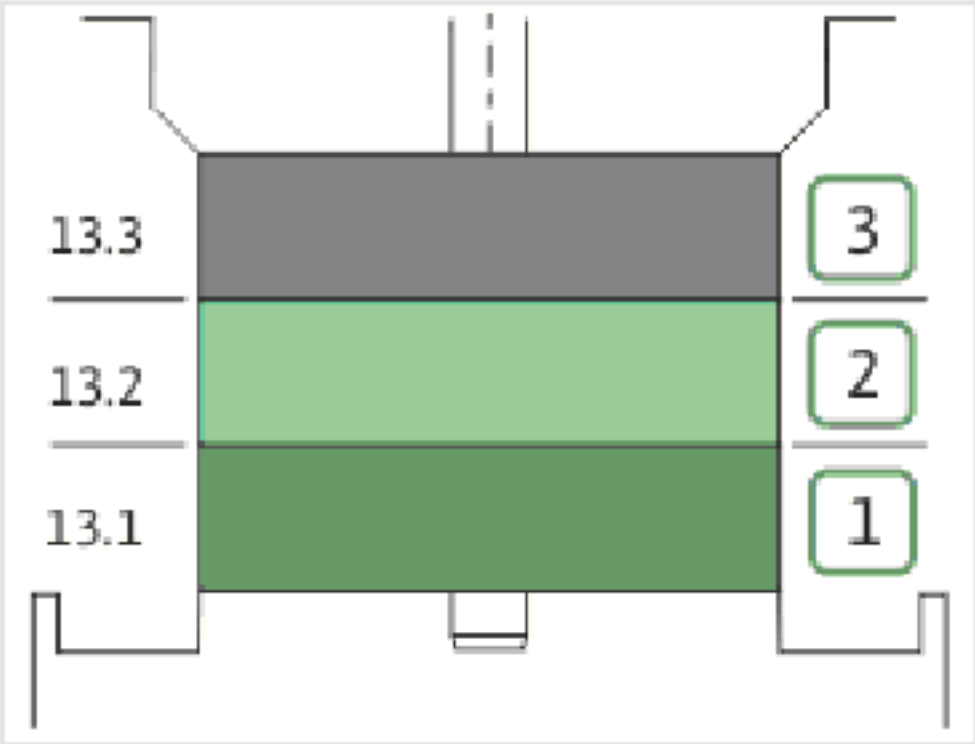
13.3
13.2
13.1
3
2
1

| Item | Article no. | Description | Quantity |
|---|---|---|---|
| 13.1 | 4174084 | STAGE HELIX 6 1.4301 KIT | 1 |
| | | > MACH.STG-CASING-WOGV-WNR-M+6-304 | 1 |
| | | > IMPELLER-M+6-304 | 1 |
| 13.2 | 4174089 | INTERMEDIATE STAGE HELIX 6 1.4301 KIT | 1 |
| | | > MACH.BEARING-STG-CASING-WNR-M+6-304 | 1 |
| | | > IMPELLER-M+6-304 | 1 |
| | | > SHAFT SLEEVE-SPACER-Ø19,35x18,465-304 | 1 |
| | | > SHAFT-SLEEVE-D16xD20x18-CW | 1 |
| 13.3 | 4174090 | INTERMEDIATE STAGE HELIX 6 1.4301 KIT | 1 |
| | | > MACH.STD-STG-CASING-WGV+NR-M+6-304 | 1 |
| | | > IMPELLER-M+6-304 | 1 |
| | | > IMPELLER SPACER Ø16,05X19,45-L36,465-304 | 1 |

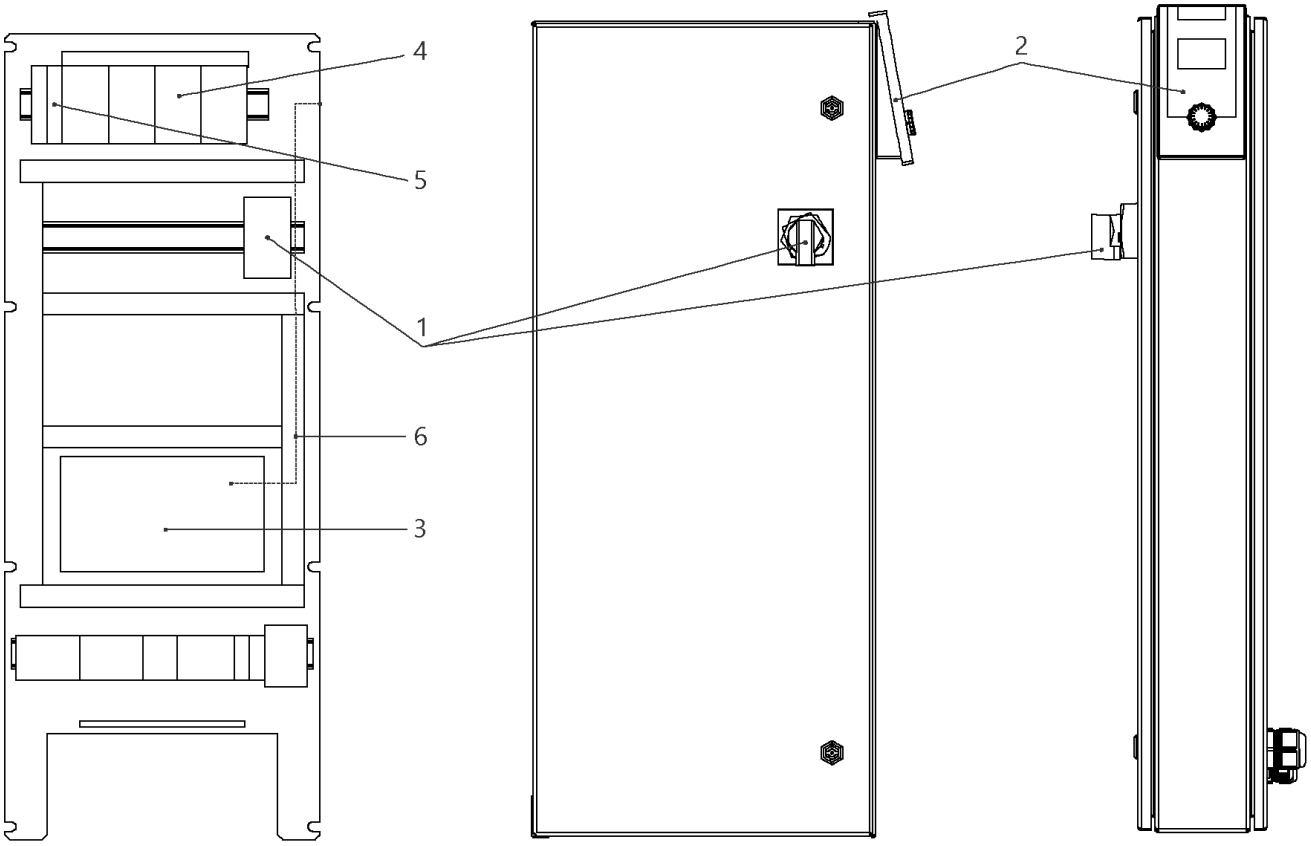
4
5
1
6
3
2

## W-CTRL-SCE-B-3x1,1KW-T4-FM-ND2

| Item | Article no. | Description | Quantity |
|---|---|---|---|
| 1 | 2104470 | MAIN SWITCH OT40F3 L250 KIT | 1 |
| 2 | 4184784 | CONTROL PANEL HMI SC KIT | 1 |
| 2 | 4185259 | ASSEMBLY DISPLAY SC PKG VP. | 1 |
| 3 | 4185257 | ASSEMBLY CPU SCe Booster VP. | 1 |
| 4 | 2051217 | AUTOM.CIRCUIT BREAKER S203 B16 TO7,5kW | 1 |
| 5 | 2046288 | CIRCUIT BREAKER S201 B16 | 1 |
| 6 | 4194956 | PATCH CABLE RJ45 CAT6 1,0M BLUE SC-PANEL | 1 |

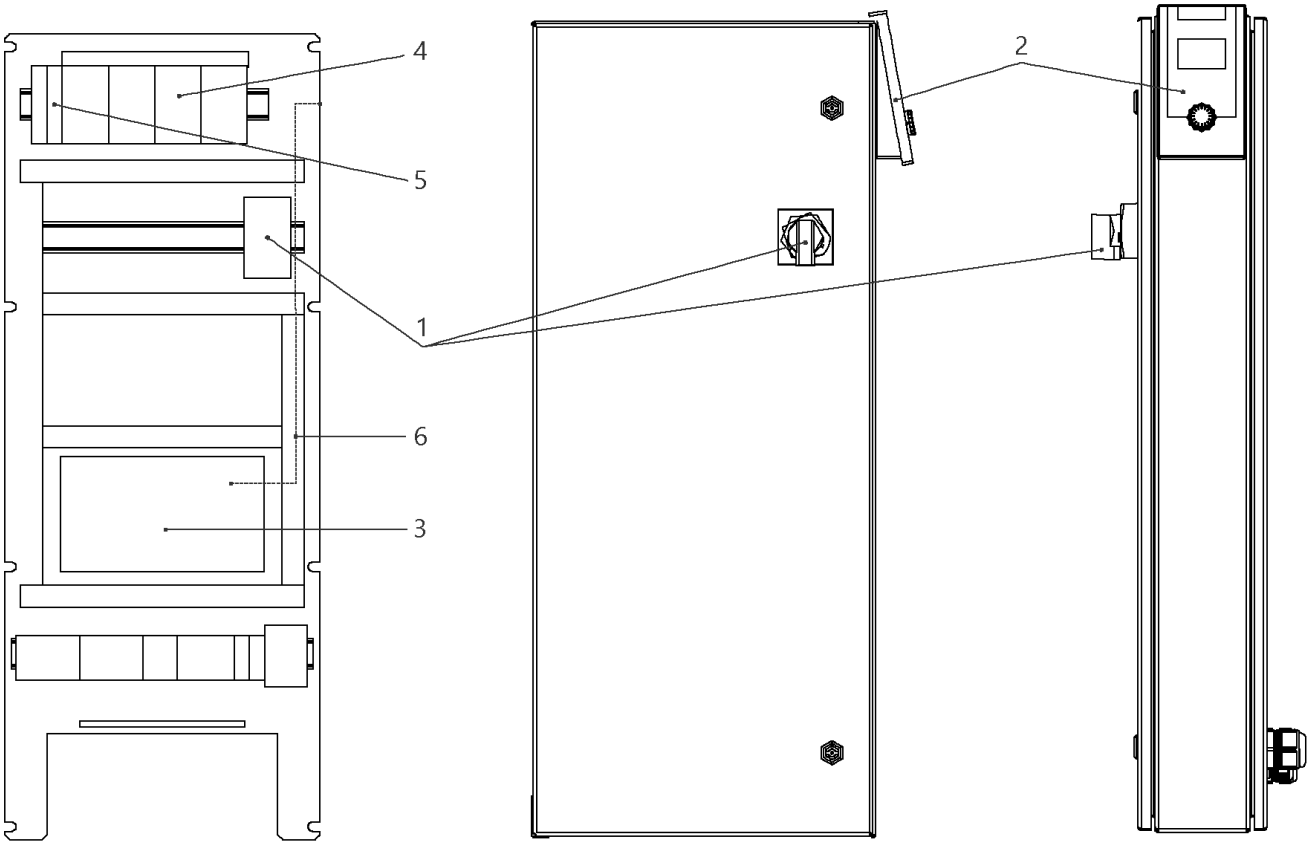
4
5
1
6
3
2

## W-CTRL-SCE-B-3x0,55-1,5KW-T4-FM-ND1

| Item | Article no. | Description | Quantity |
|---|---|---|---|
| 1 | 2104470 | MAIN SWITCH OT40F3 L250 KIT | 1 |
| 2 | 4184784 | CONTROL PANEL HMI SC KIT | 1 |
| 2 | 4185259 | ASSEMBLY DISPLAY SC PKG VP. | 1 |
| 3 | 4185257 | ASSEMBLY CPU SCe Booster VP. | 1 |
| 4 | 2051217 | AUTOM.CIRCUIT BREAKER S203 B16 TO7,5kW | 1 |
| 5 | 2046288 | CIRCUIT BREAKER S201 B16 | 1 |
| 6 | 4197081 | CABLE RJ45 CAT6 0,5M RED SC-PANEL VP. | 1 |

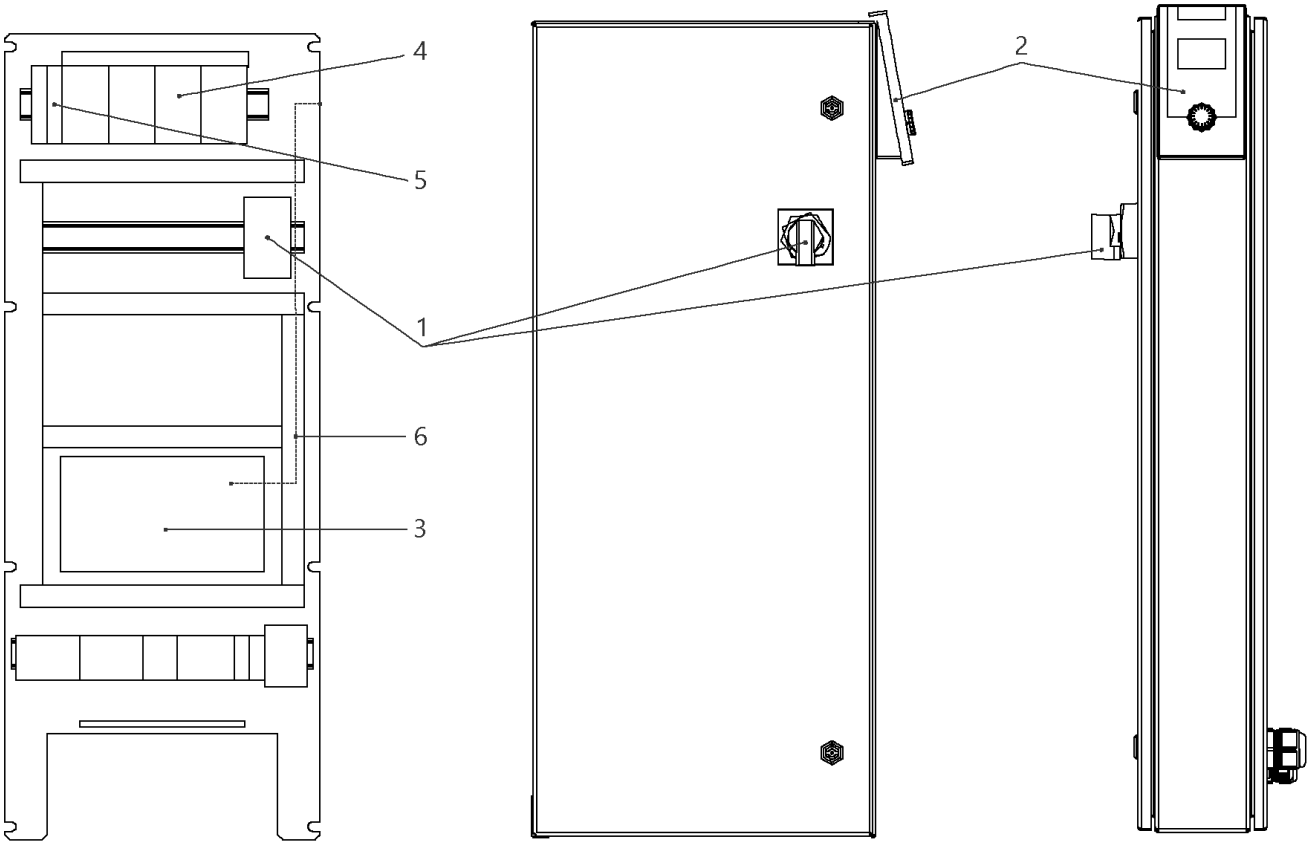
4
5
1
6
3
2

## W-CTRL-SCE-B-3x10A-T34-FM-ND1-AVC-PKG (2541914)

| Item | Article no. | Description | Quantity |
|---|---|---|---|
| 1 | 2104473 | MAIN SWITCH OT63F3 L105 KIT | 1 |
| Note: TO / BIS / JUSQU'AU 30/06/2015 | | | |
| 1 | 2104470 | MAIN SWITCH OT40F3 L250 KIT | 1 |
| Note: FROM / AB / À PARTIR DU 01/07/2015 | | | |
| 2 | 4184784 | CONTROL PANEL HMI SC KIT | 1 |
| 2 | 4185259 | ASSEMBLY DISPLAY SC PKG VP. | 1 |
| Note: DISPLAY ALONE / PLATINE SEULE | | | |
| 3 | 4185257 | ASSEMBLY CPU SCe Booster VP. | 1 |
| 4 | 2119861 | AUTOMATIC CIRCUIT BREAKER S203 B13 3POL. | 1 |
| 5 | 2046288 | CIRCUIT BREAKER S201 B16 | 1 |
| 6 | 4197081 | CABLE RJ45 CAT6 0,5M RED SC-PANEL VP. | 1 |

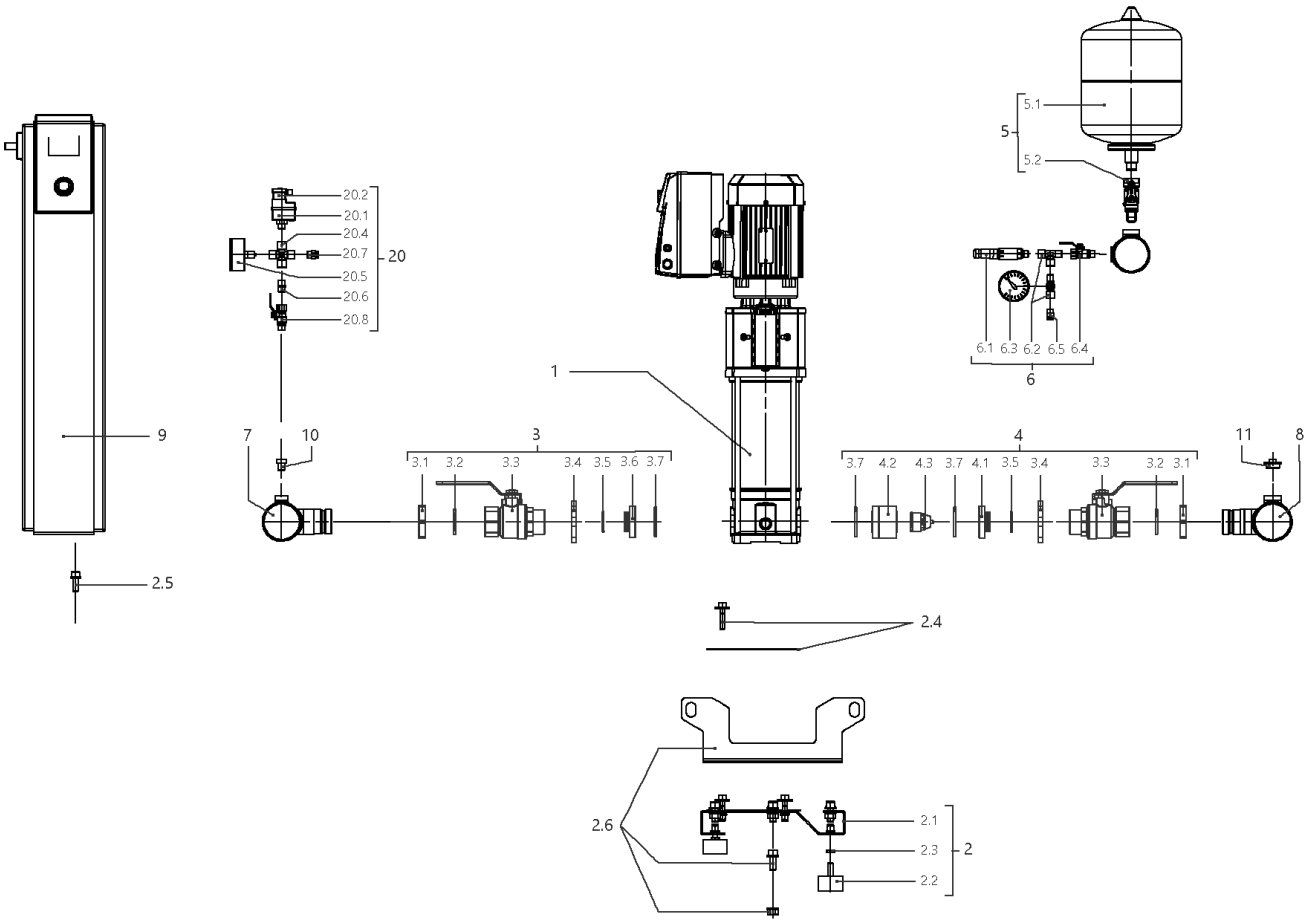
5.1
5
5.2
20.2
20.1
20.4
20.7
20
20.5
20.6
20.8
6.1 6.3 6.2 6.5 6.4
6
1
9
7
10
3
3.1 3.2 3.3 3.4 3.5 3.6 3.7
4
3.7 4.2 4.3 3.7 4.1 3.5 3.4 3.3 3.2 3.1
11
8
2.5
2.4
2.6
2.1
2.3
2
2.2

## SiBoost Smart 3HELIX VE604 (2537341)

| Item | Article no. | Description | Quantity |
|---|---|---|---|
| 1 | | HELIX VE604-1/16/E/S | 1 |
| Note: TO / BIS / JUSQU'AU 31/03/2016 | | | |
| 1 | 4201581 | HELIX VE604-1/16/E/S | 1 |
| Note: FROM / AB / À PARTIR DU 01/04/2016 | | | |
| 2 | 4200137 | BASE PLATE DE3 1150x300 M10 KIT | 1 |
| 2.1 | | > BASEPLATE_3x4/6/10V_E300_1150x300BOX_150 | 1 |
| 2.2 | 2028654 | > VIBRATION DAMPER D.50X30 M10X28 | 1 |
| 2.3 | 2028281 | > NUT M10 DIN936 (ISO4035) 17H VZ | 1 |
| 2.4 | 4199875 | > HOLDER PUMP Siboost Helix V2/4 KIT | 1 |
| 2.5 | 4197084 | > HOLDER SWITCHBOX WILO Smart Control KIT | 1 |
| 2.6 | 4197085 | > LIFTING Siboost HELIX SC KIT | 1 |
| 3 | 4199876 | SUCTION SIDE Siboost Helix V2/4/6 KIT | 1 |
| 3.1 | 2032610 | > NUT G11/4 MS VP. | 1 |
| 3.2 | 2032611 | > O-RING ID.36,09X3,53N DIN3771 E7502 | 1 |
| 3.3 | 2507646 | > BALL VALVE G11/4"M-F-W.HANDLE 1/4-TURN | 1 |
| 3.4 | 2032613 | > SCREWED FLANGE G1 1/4" LK-75 ST37VZ | 1 |
| 3.5 | 2032614 | > O-RING ID.29,82X2,62N DIN3771 E7502 | 1 |
| 3.6 | 2032615 | > SPACER F.I/A KUH.DN32 CUZN | 1 |
| 3.7 | 2032616 | > O-RING ID.44X3,53N DIN3771 E7502 | 1 |
| 4 | 4199877 | DELIVERY SIDE Siboost Helix V2/4/6 KIT | 1 |
| 3.1 | 2032610 | > NUT G11/4 MS VP. | 1 |
| 3.2 | 2032611 | > O-RING ID.36,09X3,53N DIN3771 E7502 | 1 |
| 3.3 | 2507646 | > BALL VALVE G11/4"M-F-W.HANDLE 1/4-TURN | 1 |
| 3.4 | 2032613 | > SCREWED FLANGE G1 1/4" LK-75 ST37VZ | 1 |
| 3.5 | 2032614 | > O-RING ID.29,82X2,62N DIN3771 E7502 | 1 |
| 4.1 | 2058116 | > SPACER F.I/A KUH.DN32 CUZN | 1 |
| 3.7 | 2032616 | > O-RING ID.44X3,53N DIN3771 E7502 | 1 |
| 4.2 | 2058115 | > HOUSING RFV(RV-IN) DN32 SGS/DRS | 1 |
| 4.3 | 2027870 | > NON-RETURN-DEVICE INSERT DN32(MTR) | 1 |
| 5 | 2032642 | DIAPHREM TANK 8L/PN16 DIN4807/T5 KIT | 1 |
| 5.1 | 2045914 | > DIAPHREM TANK 8L TYP-DD 16BAR | 1 |
| 5.2 | 2027853 | > FLOW FITTING G3/4 FOR DIAPHRAGM VES. | 1 |
| 6 | 4197076 | PRESSURE SENSOR/ GAUGE 0-16BAR KIT | 1 |
| 6.1 | 2085909 | > PRESS.SENSOR 1/4" 0-16BAR 4-20MA VP. | 1 |

| Item | Article no. | Description | Quantity |
|---|---|---|---|
| 6.2 | 4197077 | > T-PIECE 1/4" VP. | 1 |
| 6.3 | 2028692 | > PRESSURE GAUGE NG63-PN16-G1/4 | 1 |
| 6.4 | 2028291 | > BALL TAP R1/4" PN42 GIACOMINI R254DL | 1 |
| 6.5 | 2028691 | > BLOWGUN 1/4" MS 30BAR VP. | 1 |
| 7 | 4200140 | PIPE DE3 21/2''-3x11/4"+2x1/4x900 VP. | 1 |
| 8 | 4200141 | PIPE DE3 21/2''-3x11/4"+2x1/4+1x3/4x900 | 1 |
| 9 | | W-CTRL-SCE-B-3x0,55-1,5KW-T4-FM-ND1 | 1 |
| Note: TO / BIS / JUSQU'AU 18/05/2014 | | | |
| 9 | 2541914 | W-CTRL-SCE-B-3x10A-T34-FM-ND1-AVC-PKG | 1 |
| Note: FROM / AB / À PARTIR DU 19/05/2014 | | | |
| 10 | 4197079 | PLUG G1/4"x10 AISI304 KIT | 1 |
| 11 | 2032654 | PLUG R3/4" MS VIEGA 1751 | 1 |
| 20 | 2521150 | ASSEMBLY WMS. DE-EB. +VP | 1 |
| 20.1 | 2028652 | > PRESSURE SWITCH PS3-ASR 1/(1,3) VP. | 1 |
| 20.2 | 2130983 | > PLUG PS3-415 WITH KABEL 1,5M 2NO VP. | 1 |
| 20.4 | 2028290 | > CROSSPIECE R1/4" MS-NICKEL | 1 |
| 20.5 | 2028687 | > PRESSURE GAUGE NG63 R1/4" HI.0-6BAR | 1 |
| 20.6 | 2054268 | > DUAL NIPPLE G1/4" x G1/4" MS VP. | 1 |
| 20.7 | 2028691 | > BLOWGUN 1/4" MS 30BAR VP. | 1 |
| 20.8 | 2028291 | > BALL TAP R1/4" PN42 GIACOMINI R254DL | 1 |

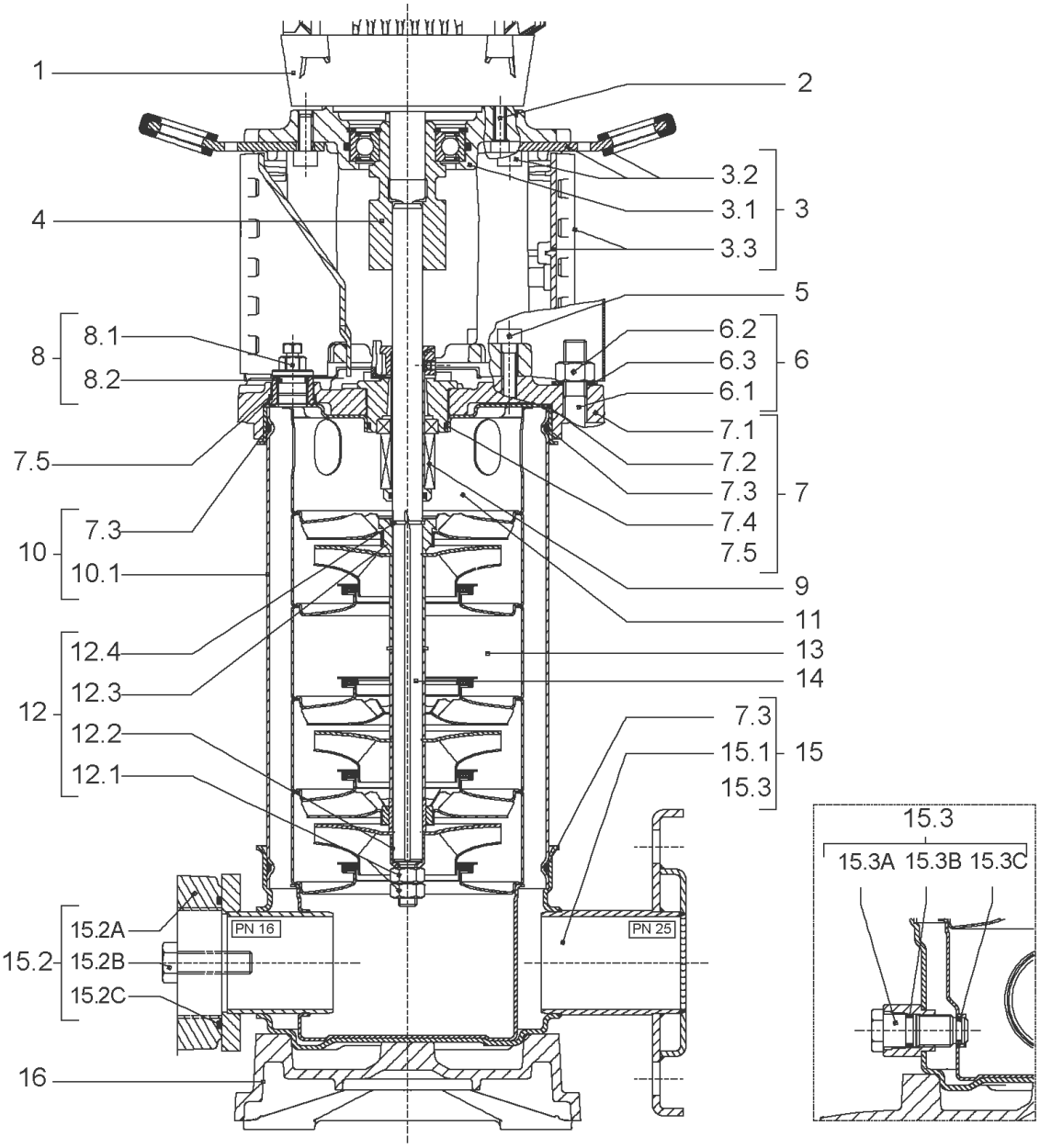
1
2
3.2
3.1
3
3.3
4
5
8.1
8
8.2
6.2
6.3
6
6.1
7.1
7.5
7.2
7.3
7
7.4
7.3
10
7.5
10.1
9
11
12.4
13
12.3
14
12
12.2
7.3
15.1
15
12.1
15.3
15.3
15.3A 15.3B 15.3C
15.2A
PN 16
PN 25
15.2
15.2B
15.2C
16

| Item | Article no. | Description | Quantity |
|---|---|---|---|
| 1 | | DRIVE HELIX-VE604IE2-WE KIT | 1 |
| Note: MOTOR BRAND WILO ELEC | | | |
| 1 | | DRIVE HELIX-VE604-IE4-WE KIT | 1 |
| Note: MOTOR BRAND WILO ELEC | | | |
| 2 | 4159703 | SCREW M8X40 (4 PIECES) | 1 |
| 3 | 4172795 | LANTERNE FT115 HELIX KIT | 1 |
| 3.1 | | > M+5_6_LANTERN_ONE-PIECE_FT115_CATA | 1 |
| 3.2 | 2127604 | > EYELET CPL.FT HELIX(2 PIECES) | 1 |
| 3.3 | 4159692 | > COUPLING PROTECTOR FT HELIX KIT | 1 |
| 4 | 4159709 | COUPLING D.16xD.24 FT115 HELIX KIT | 1 |
| 5 | 4159707 | SCREW M8X30 (4 PIECES) | 1 |
| 6 | 4177817 | STUD BOLT M12X341 KIT | 1 |
| 6.1 | | > TIE BOLT M12-341x18x30-1.4057 | 1 |
| 6.2 | 2094647 | > NUT M12 M12 ISO4032 VP. | 1 |
| 6.3 | 2123557 | > WASHER CS-12.4-24-1.6-NFE25 (4 PIECES) | 1 |
| 7 | 4210143 | STATIONARY RING HOLDER HELIX 6" EPDM | 1 |
| 7.2 | 2127607 | > STATIONARY RING HOLDER 6" HELIX 1.4301 V | 1 |
| 7.3 | 4176513 | > O-RING FOR PUMP JACKET VP. | 1 |
| 7.4 | 2127603 | > O-RING ID.37,6x2,4 EPDM VP. | 1 |
| 7.5 | 2127602 | > O-RING ID.21,35x2 EPDM VP. | 1 |
| 8 | 4159686 | FILING/PURGING PLUG HELIX EPDM KIT | 1 |
| 9 | 4171327 | SEAL-KIT-HELIX6-10-16 O/E KIT | 1 |
| 10 | 4177818 | HOUSING PIPES Ø152-M+1004-304 KIT | 1 |
| 7.3 | 4176513 | > O-RING FOR PUMP JACKET VP. | 1 |
| 10.1 | | > HOUSING-PIPE Ø152-M+1004/1603-304 | 1 |
| 11 | 4174087 | CENTERING STAGE-RETURN HELIX6 1.4301VP. | 1 |
| 12 | 4174086 | SHAFTS EQUIPMENT HELIX V6 MONOBLOC KIT | 1 |
| 12.1 | | > NUT-H-M10-A4.70 | 1 |
| 12.2 | | > SERRATED LOCK WASHER M+6M3-316L | 1 |
| 12.3 | | > IMPELLER STOP RING L33,2-304 | 1 |
| 12.4 | | > STOP-RUSH-1/2-D16xd2-M+316 | 1 |
| 13 | | HYDRAULIC HELIX V 604 1.4307 | 1 |
| 14 | 4177820 | SHAFTS Ø16X330 1. 4301 VP. | 1 |
| 15 | 4217897 | PUMP HOUSING HELIX DN32 PN16 1.4301 KIT | 1 |

| Item | Article no. | Description | Quantity |
|---|---|---|---|
| 7.3 | 4176513 | > O-RING FOR PUMP JACKET VP. | 1 |
| 15.1 | | > BLASTING PPE HOUSING V-PN16-DN32-5"-304 | 1 |
| 15.2 | 4217891 | > COUNTER FLANGE-G1"1/4-PN16-GJL KIT | 1 |
| 15.3 | 4171321 | > PRIMING/DRAIN PLUG EPDM HELIX KIT | 1 |
| 16 | 4177964 | BASEPLATE HELIX V2/4/6 PN16 VP. | 1 |

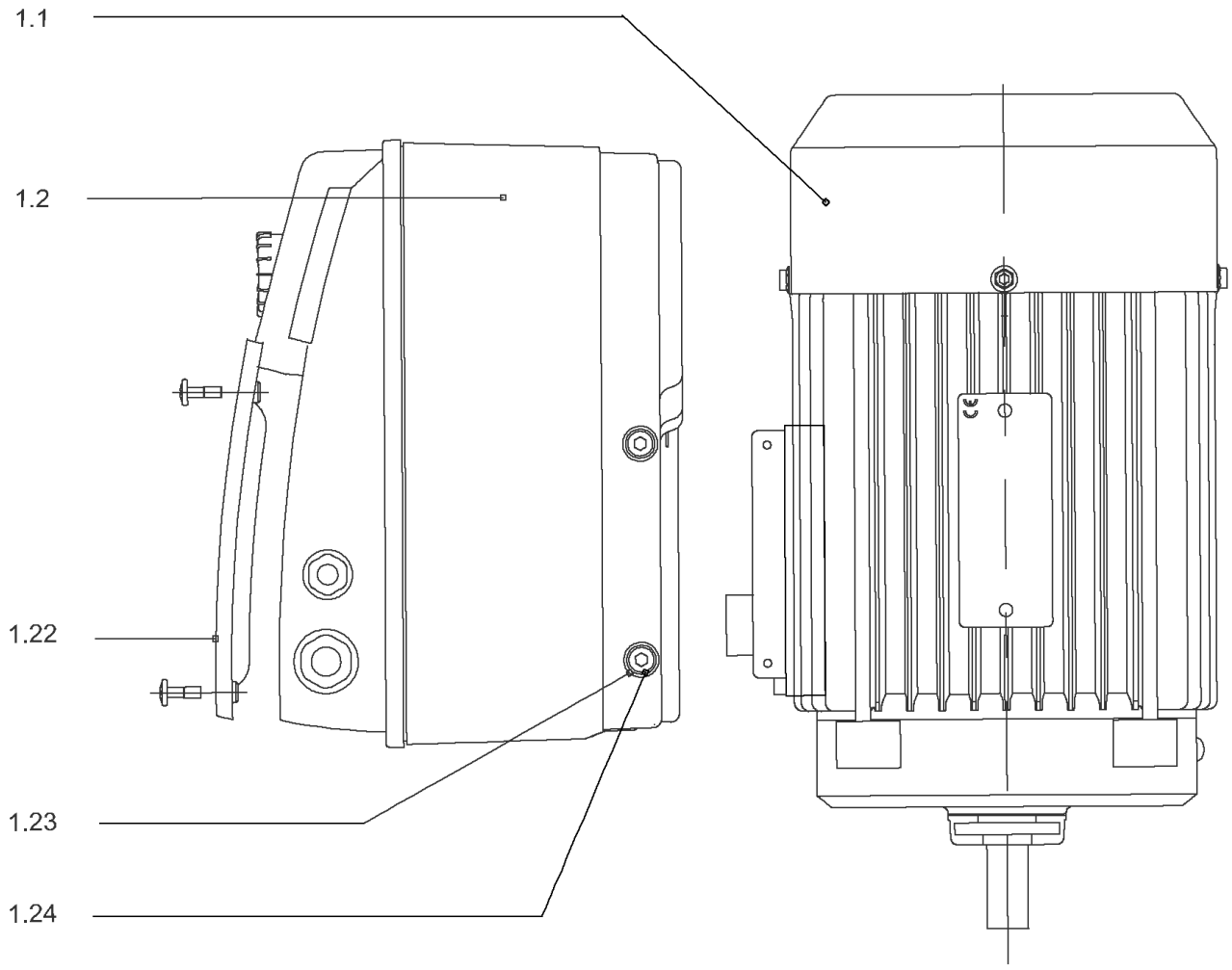
1.1
1.2
1.22
1.23
1.24

## DRIVE HELIX-VE604IE2-WE KIT

| Item | Article no. | Description | Quantity |
|---|---|---|---|
| 1.1 | | MOTOR 1,5/2/90 3~ 380V 60HZ IE2 WE VP. | 1 |
| Note: no longer available/nicht mehrlieferbar/n'est plus disponible | | | |
| | | SPARE PARTS MOTOR:ON REQUEST | 1 |
| 1.2 | 4190201 | MODULE HELIX-VE604-IE2-WE KIT | 1 |
| 1.22 | 2054227 | > MODULE COVER/GASKET TL3/4 KIT | 1 |
| 1.23 | 4215716 | > SCREW M5X16 DIN912 8.8 A2A (4pieces) VP. | 1 |
| 1.24 | 2057978 | > RONDELLE A5,3 DIN6797 FST ZN (4 PIECES) | 1 |

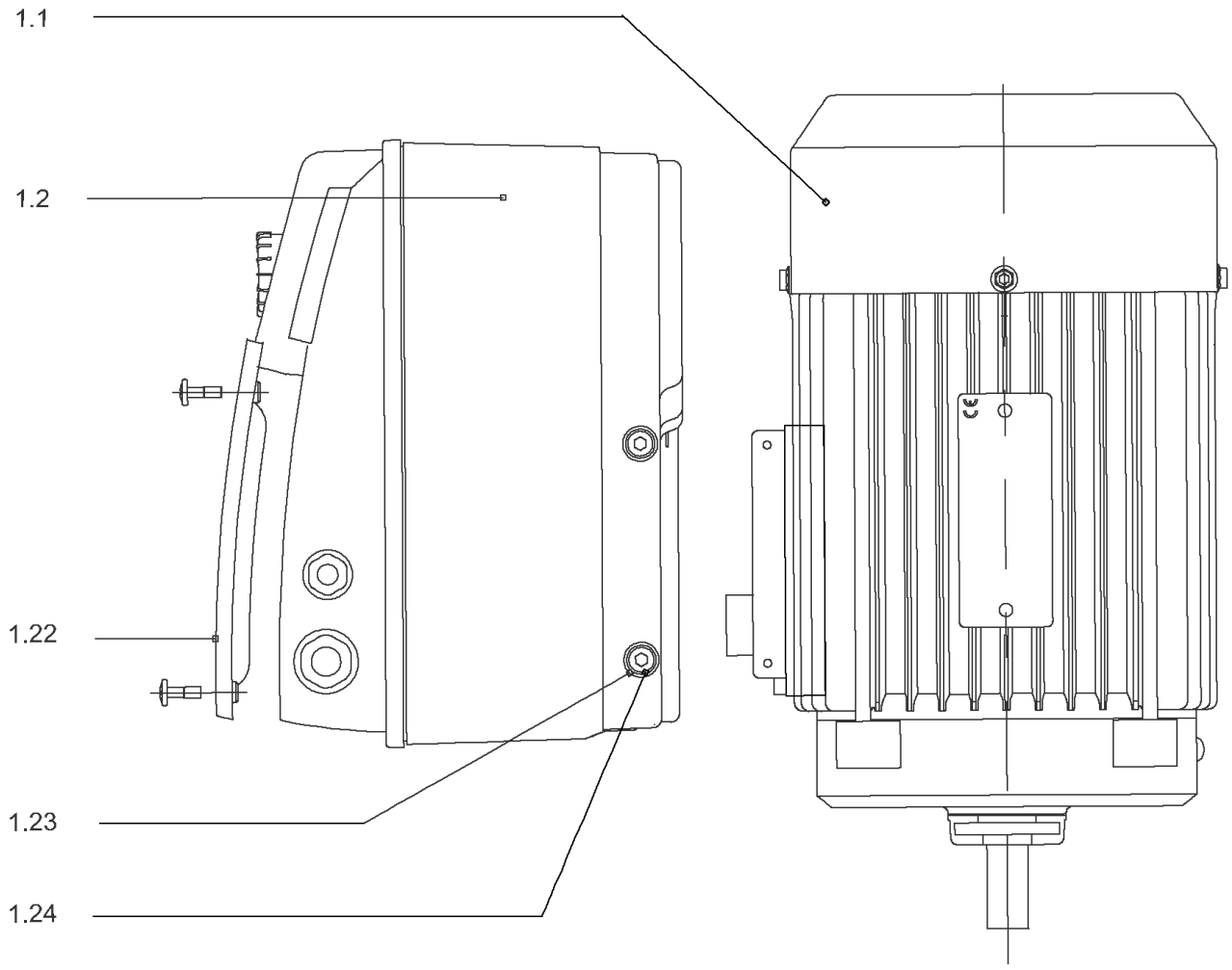
1.1
1.2
1.22
1.23
1.24

## DRIVE HELIX-VE604-IE4-WE KIT

| Item | Article no. | Description | Quantity |
|---|---|---|---|
| 1.1 | 4207918 | MOTOR 1.5/2/90 3~ 380V 60HZ IE4 WE VP. | 1 |
| | | SPARE PARTS MOTOR:ON REQUEST | 1 |
| 1.2 | 4209316 | MODULE HELIX-VE604-IE4-WE KIT | 1 |
| 1.22 | 2054227 | > MODULE COVER/GASKET TL3/4 KIT | 1 |
| 1.23 | 4215716 | > SCREW M5X16 DIN912 8.8 A2A (4pieces) VP. | 1 |
| 1.24 | 2057978 | > RONDELLE A5,3 DIN6797 FST ZN (4 PIECES) | 1 |

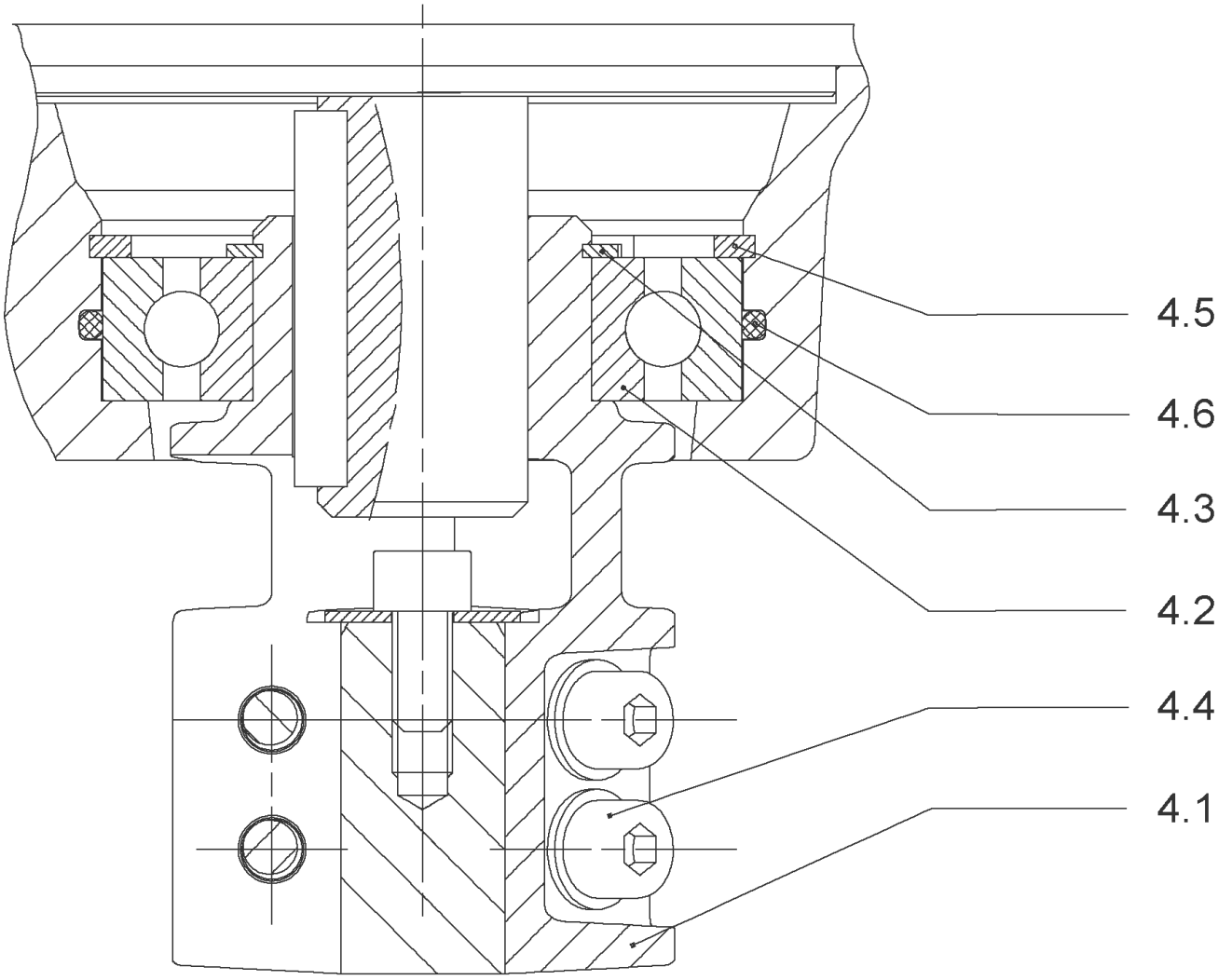
4.5
4.6
4.3
4.2
4.4
4.1

## COUPLING D.16xD.24 FT115 HELIX KIT (4159709)

| Item | Article no. | Description | Quantity |
|---|---|---|---|
| 4.1 | | COUPLING M+ Ø16XØ24 FT115 MACHINED | 1 |
| 4.2 | 2131023 | BALL BEARING 6207/ZZ-C3(HT)VP. | 1 |
| 4.3 | 4234254 | CIRCLIP-FOR-SHAFT-D35x1.5 VP. | 1 |
| 4.4 | 4157726 | SCREW KIT M8X30 (4 PIECES) | 1 |
| 4.5 | 4234251 | CIRCLIP-D72x2.5 VP. | 1 |
| 4.6 | 4234246 | O-RING 72X3 VP. | 1 |
| | | NOMEL CONTACT WASHER 8x16x1,4 STEEL ZC | 1 |

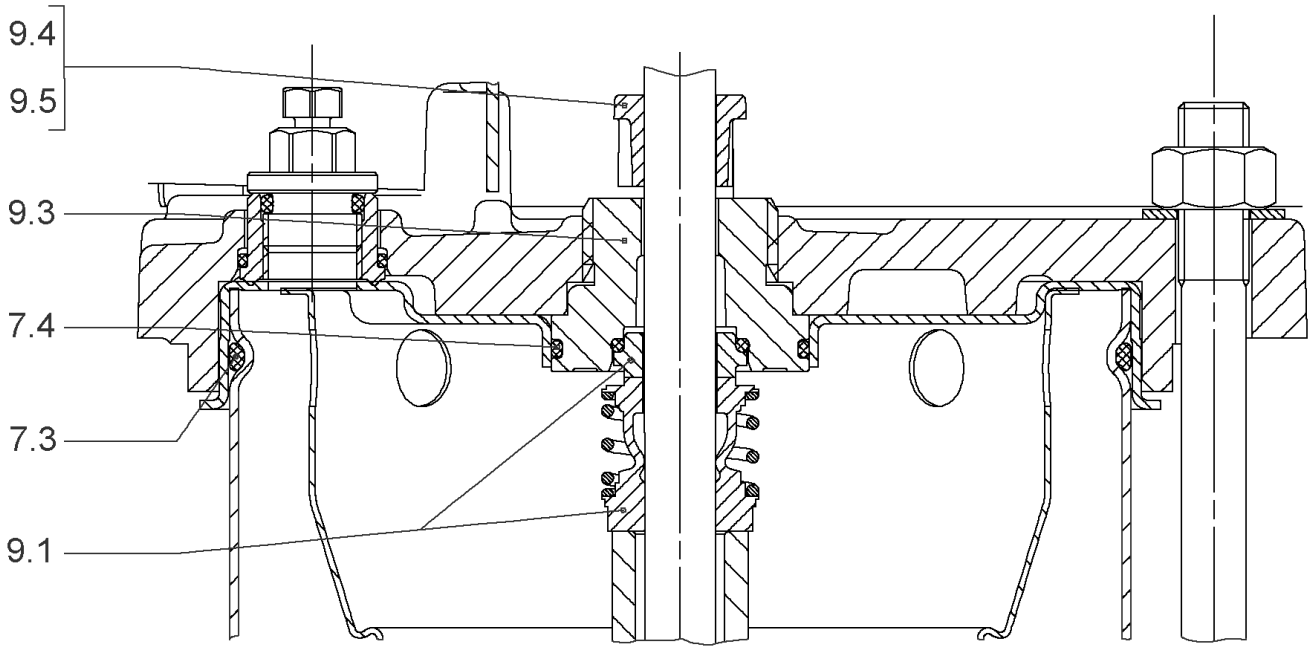
9.4
9.5
9.3
7.4
7.3
9.1

## SEAL-KIT-HELIX6-10-16 O/E KIT (4171327)

| Item | Article no. | Description | Quantity |
|---|---|---|---|
| 7.3 | 4176513 | O-RING FOR PUMP JACKET VP. | 1 |
| 7.4 | 2127603 | O-RING ID.37,6x2,4 EPDM VP. | 1 |
| 9.1 | 4177801 | MECH.SEAL HELIX6-10-16 O/E VP. | 1 |
| 9.3 | 4177798 | MACHINED RING HOLDER M+6" Ø16 304 VP. | 1 |
| 9.5 | 4177799 | MACHINED DRIVE RING Ø16 VP. | 1 |
| 9.4 | 4176520 | SCREW CH M5x5 A4-70 ( 3PIECES ) | 1 |

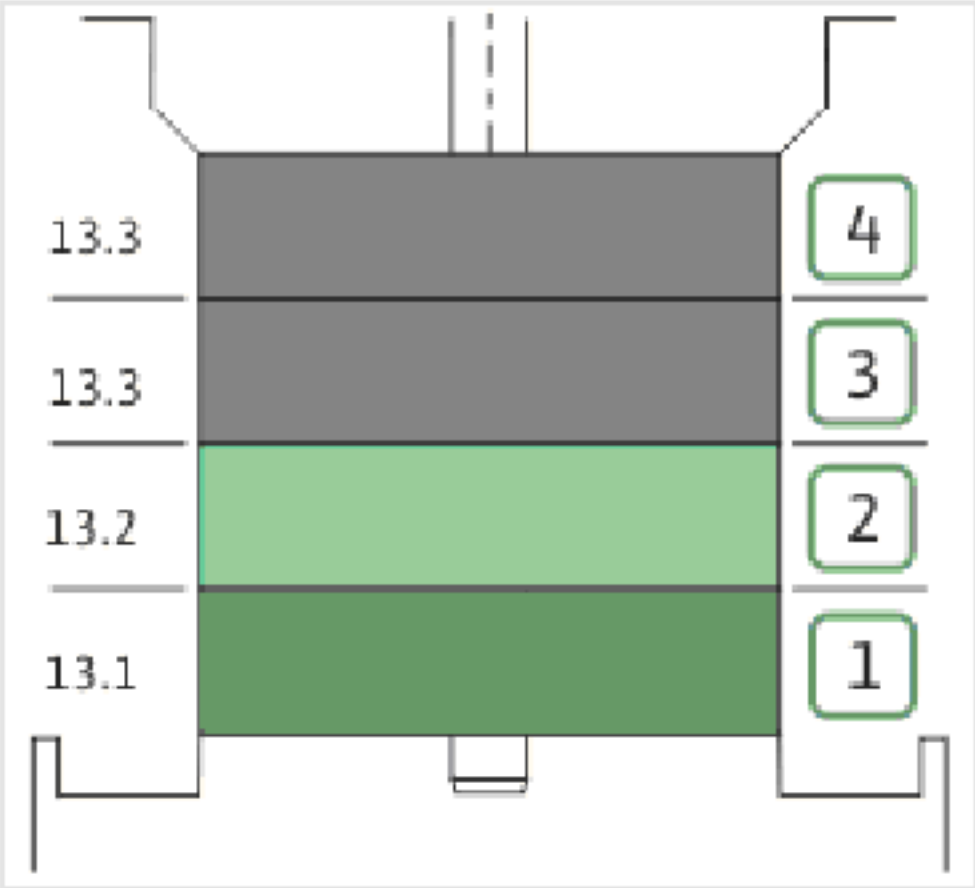
13.3
13.3
13.2
13.1
4
3
2
1

| Item | Article no. | Description | Quantity |
|---|---|---|---|
| 13.1 | 4174084 | STAGE HELIX 6 1.4301 KIT | 1 |
| | | > MACH.STG-CASING-WOGV-WNR-M+6-304 | 1 |
| | | > IMPELLER-M+6-304 | 1 |
| 13.2 | 4174089 | INTERMEDIATE STAGE HELIX 6 1.4301 KIT | 1 |
| | | > MACH.BEARING-STG-CASING-WNR-M+6-304 | 1 |
| | | > IMPELLER-M+6-304 | 1 |
| | | > SHAFT SLEEVE-SPACER-Ø19,35x18,465-304 | 1 |
| | | > SHAFT-SLEEVE-D16xD20x18-CW | 1 |
| 13.3 | 4174090 | INTERMEDIATE STAGE HELIX 6 1.4301 KIT | 1 |
| | | > MACH.STD-STG-CASING-WGV+NR-M+6-304 | 1 |
| | | > IMPELLER-M+6-304 | 1 |
| | | > IMPELLER SPACER Ø16,05X19,45-L36,465-304 | 1 |

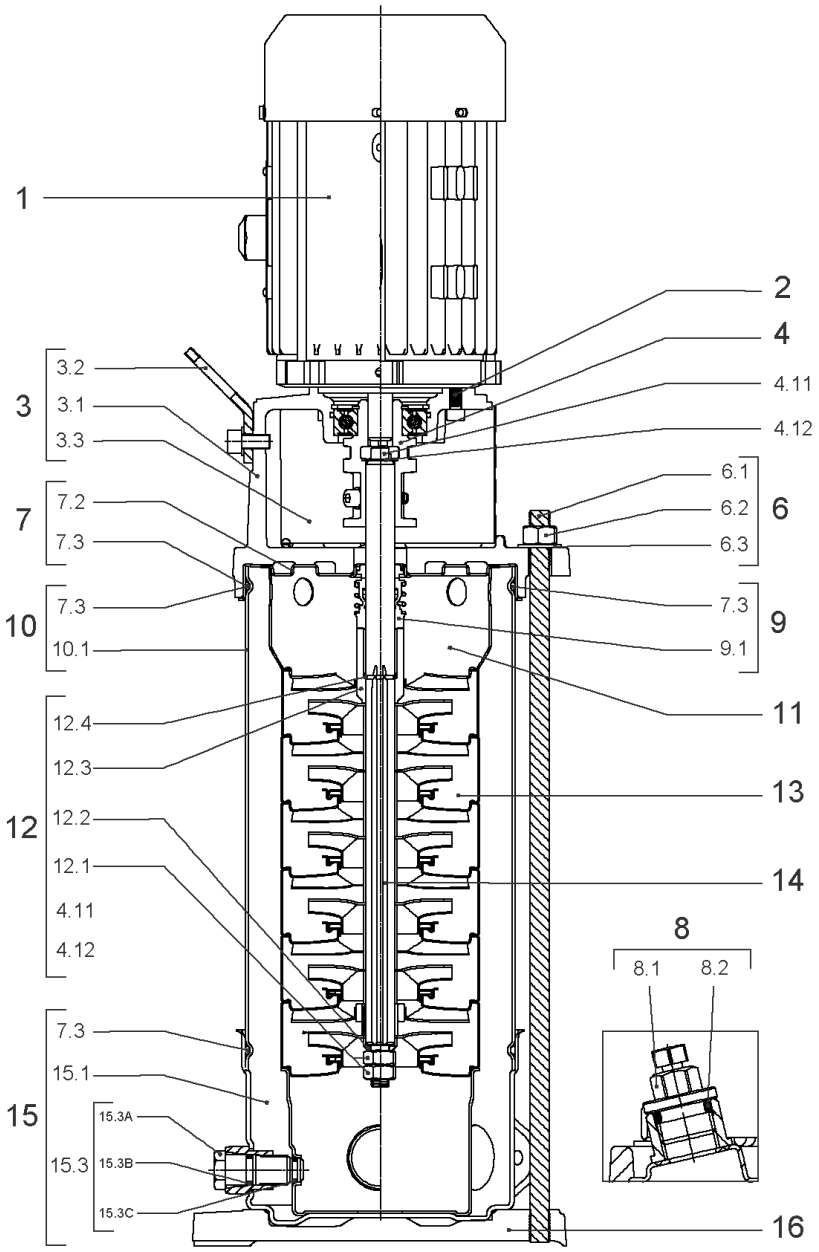
1
2
4
4.11
4.12
3
3.2
3.1
3.3
7
7.2
7.3
10
7.3
10.1
12
12.4
12.3
12.2
12.1
4.11
4.12
15
7.3
15.1
15.3
15.3A
15.3B
15.3C
6
6.1
6.2
6.3
9
7.3
9.1
11
13
14
8
8.1
8.2
16

## HELIX VE604-1/16/E/S (4201581)

| Item | Article no. | Description | Quantity |
|---|---|---|---|
| 1 | | DRIVE HELIX-VE604-IE4-WE KIT | 1 |
| Note: MOTOR BRAND WILO ELEC | | | |
| | | SPARE PARTS MOTOR:ON REQUEST | 1 |
| 2 | 4159707 | SCREW M8X30 (4 PIECES) | 1 |
| 3 | 4213784 | LANTERN FT115 HELIX KIT | 1 |
| 3.1 | | > LANT-MOT-VMI-ReDTC6"-FT115-MACHINED+CATA | 1 |
| 3.2 | 4184852 | > EYELET CPL.FT HELIX (2 PIECES) | 1 |
| 3.3 | 4213782 | > COUPLING PROTECTOR FT115/130 HELIX KIT | 1 |
| 4 | 4159709 | COUPLING D.16xD.24 FT115 HELIX KIT | 1 |
| 6 | 4177817 | STUD BOLT M12X341 KIT | 1 |
| 6.1 | | > TIE BOLT M12-341x18x30-1.4057 | 1 |
| 6.2 | 2094647 | > NUT M12 M12 ISO4032 VP. | 1 |
| 6.3 | 2123557 | > WASHER CS-12.4-24-1.6-NFE25 (4 PIECES) | 1 |
| 7 | 4214481 | STATIONARY RING HOLDER HELIX D27 ReDTC | 1 |
| 7.2 | 4214479 | > STATIONARY RING HOLDER HELIX D27 VP. | 1 |
| 7.3 | 4176513 | > O-RING FOR PUMP JACKET VP. | 1 |
| 8 | 4212724 | FILING/PURGING PLUG HELIX ReDTC KIT | 1 |
| 8.1 | | > FILLING PLUG MVI6"-304 | 1 |
| 8.2 | 4177800 | > O-RING EPDM PLUG HELIX VP. | 1 |
| 9 | 4214483 | MECH.SEAL HELIX6-10-16 O/E ReDTC KIT | 1 |
| 9.1 | 4177801 | > MECH.SEAL HELIX6-10-16 O/E VP. | 1 |
| 7.3 | 4176513 | > O-RING FOR PUMP JACKET VP. | 1 |
| 10 | 4177818 | HOUSING PIPES Ø152-M+1004-304 KIT | 1 |
| 7.3 | 4176513 | > O-RING FOR PUMP JACKET VP. | 1 |
| 10.1 | | > HOUSING-PIPE Ø152-M+1004/1603-304 | 1 |
| 11 | 4174087 | CENTERING STAGE-RETURN HELIX6 1.4301VP. | 1 |
| 12 | 4214486 | SHAFT EQUIPMENT HELIX V6 ReDTC KIT | 1 |
| 12.1 | | > NUT-H-M10-A4.70 | 1 |
| 12.2 | | > SERRATED LOCK WASHER M+6M3-316L | 1 |
| 12.3 | | > 1/2-SNAP-RING-6/10M3-316L | 1 |
| 12.4 | | > STOP-RUSH-1/2-D16xd2-M+316 | 1 |
| 4.11 | | > SCREW CHC-M6X14-8.8-ISO4762-GEOMET500A | 1 |
| 4.12 | | > WASHER D.24 L6U ZINK | 1 |
| 13 | | HYDRAULIC HELIX V 604 1.4307 | 1 |

| Item | Article no. | Description | Quantity |
|---|---|---|---|
| 14 | 4214495 | SHAFT D.16X278 HELIX 1.4057 VP. | 1 |
| 15 | 4217897 | PUMP HOUSING HELIX DN32 PN16 1.4301 KIT | 1 |
| 7.3 | 4176513 | > O-RING FOR PUMP JACKET VP. | 1 |
| 15.1 | | > BLASTING PPE HOUSING V-PN16-DN32-5"-304 | 1 |
| 15.2 | 4217891 | > COUNTER FLANGE-G1"1/4-PN16-GJL KIT | 1 |
| 15.3 | 4171321 | > PRIMING/DRAIN PLUG EPDM HELIX KIT | 1 |
| 16 | 4177964 | BASEPLATE HELIX V2/4/6 PN16 VP. | 1 |

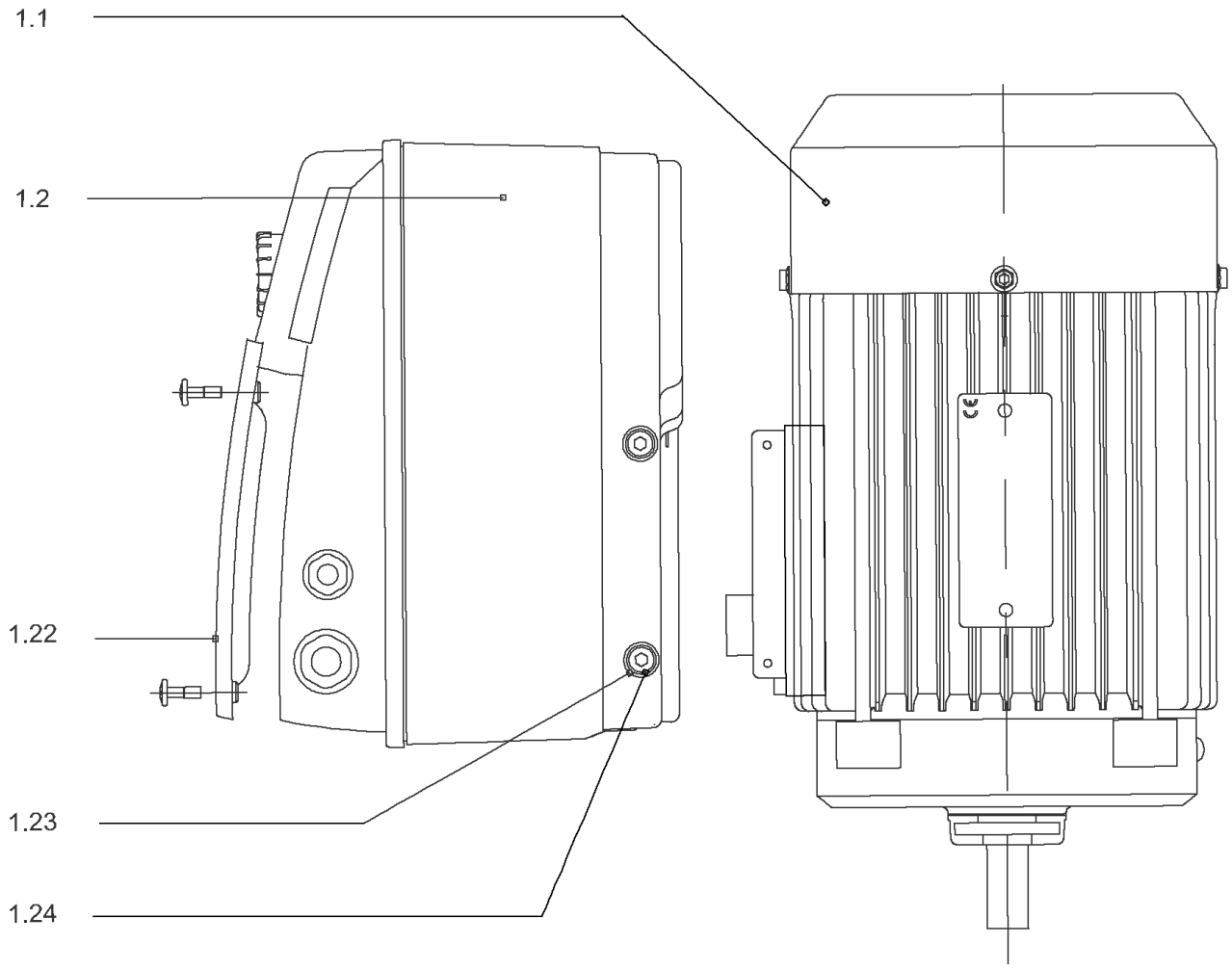
1.1
1.2
1.22
1.23
1.24

## DRIVE HELIX-VE604-IE4-WE KIT

| Item | Article no. | Description | Quantity |
|---|---|---|---|
| 1.1 | 4207918 | MOTOR 1.5/2/90 3~ 380V 60HZ IE4 WE VP. | 1 |
| | | SPARE PARTS MOTOR:ON REQUEST | 1 |
| 1.2 | 4209316 | MODULE HELIX-VE604-IE4-WE KIT | 1 |
| 1.22 | 2054227 | > MODULE COVER/GASKET TL3/4 KIT | 1 |
| 1.23 | 4215716 | > SCREW M5X16 DIN912 8.8 A2A (4pieces) VP. | 1 |
| 1.24 | 2057978 | > RONDELLE A5,3 DIN6797 FST ZN (4 PIECES) | 1 |

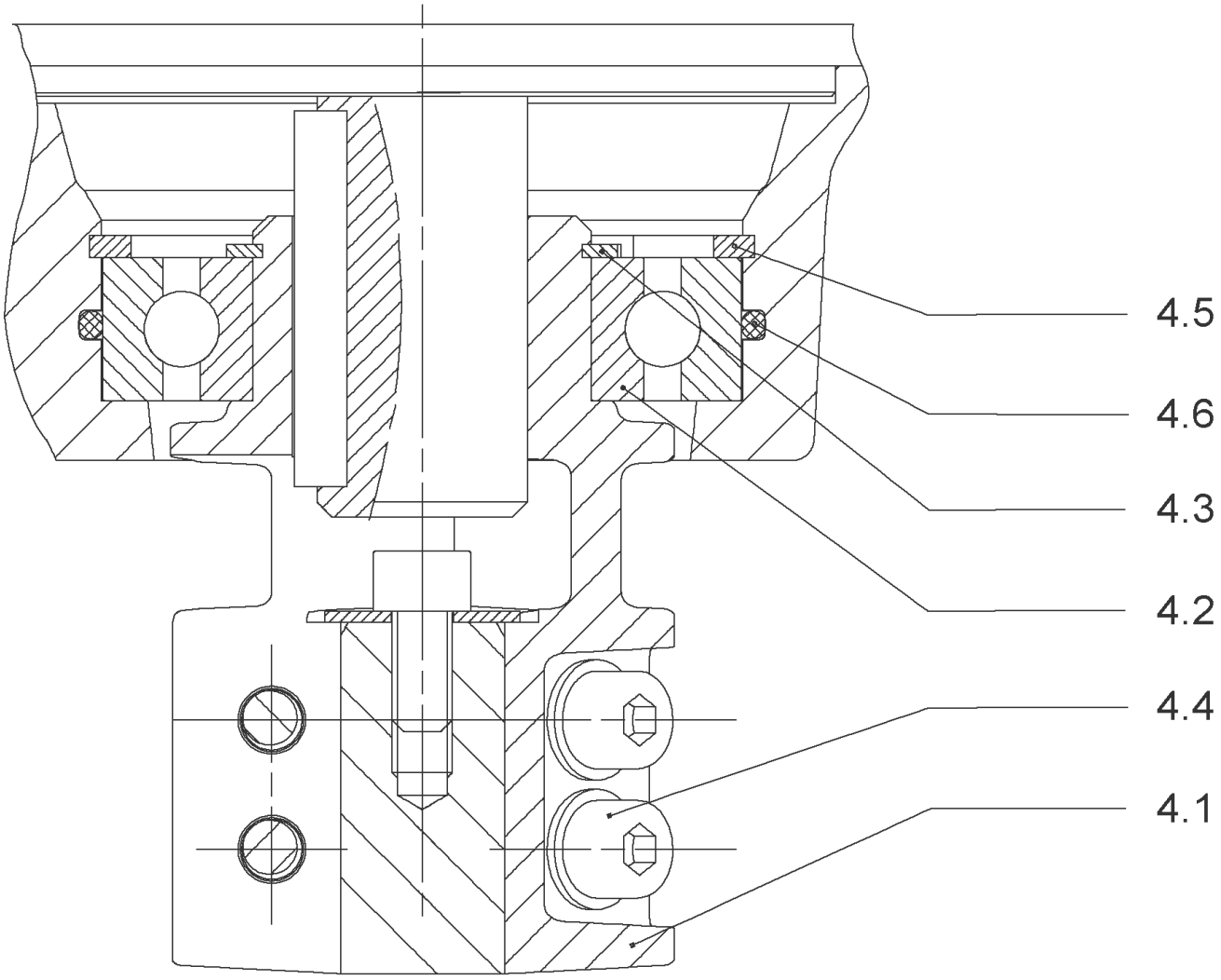
4.5
4.6
4.3
4.2
4.4
4.1

## COUPLING D.16xD.24 FT115 HELIX KIT (4159709)

| Item | Article no. | Description | Quantity |
|---|---|---|---|
| 4.1 | | COUPLING M+ Ø16XØ24 FT115 MACHINED | 1 |
| 4.2 | 2131023 | BALL BEARING 6207/ZZ-C3(HT)VP. | 1 |
| 4.3 | 4234254 | CIRCLIP-FOR-SHAFT-D35x1.5 VP. | 1 |
| 4.4 | 4157726 | SCREW KIT M8X30 (4 PIECES) | 1 |
| 4.5 | 4234251 | CIRCLIP-D72x2.5 VP. | 1 |
| 4.6 | 4234246 | O-RING 72X3 VP. | 1 |
| | | NOMEL CONTACT WASHER 8x16x1,4 STEEL ZC | 1 |

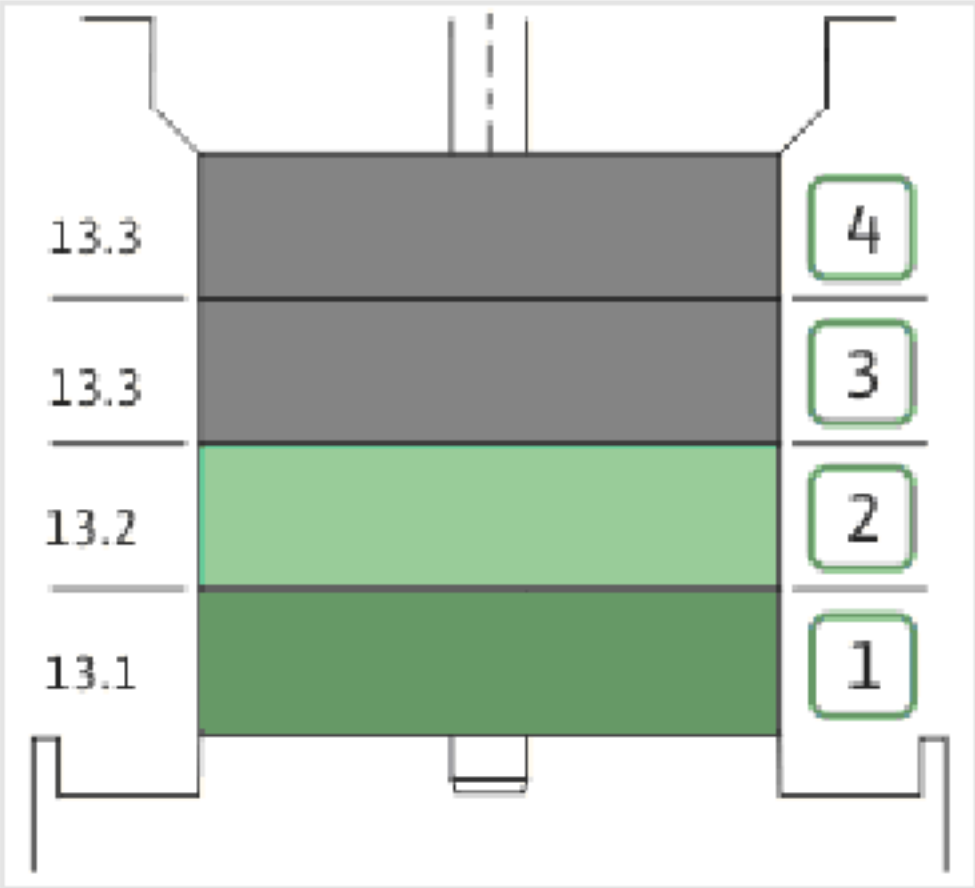
13.3
13.3
13.2
13.1
4
3
2
1

| Item | Article no. | Description | Quantity |
|---|---|---|---|
| 13.1 | 4174084 | STAGE HELIX 6 1.4301 KIT | 1 |
| | | > MACH.STG-CASING-WOGV-WNR-M+6-304 | 1 |
| | | > IMPELLER-M+6-304 | 1 |
| 13.2 | 4174089 | INTERMEDIATE STAGE HELIX 6 1.4301 KIT | 1 |
| | | > MACH.BEARING-STG-CASING-WNR-M+6-304 | 1 |
| | | > IMPELLER-M+6-304 | 1 |
| | | > SHAFT SLEEVE-SPACER-Ø19,35x18,465-304 | 1 |
| | | > SHAFT-SLEEVE-D16xD20x18-CW | 1 |
| 13.3 | 4174090 | INTERMEDIATE STAGE HELIX 6 1.4301 KIT | 1 |
| | | > MACH.STD-STG-CASING-WGV+NR-M+6-304 | 1 |
| | | > IMPELLER-M+6-304 | 1 |
| | | > IMPELLER SPACER Ø16,05X19,45-L36,465-304 | 1 |

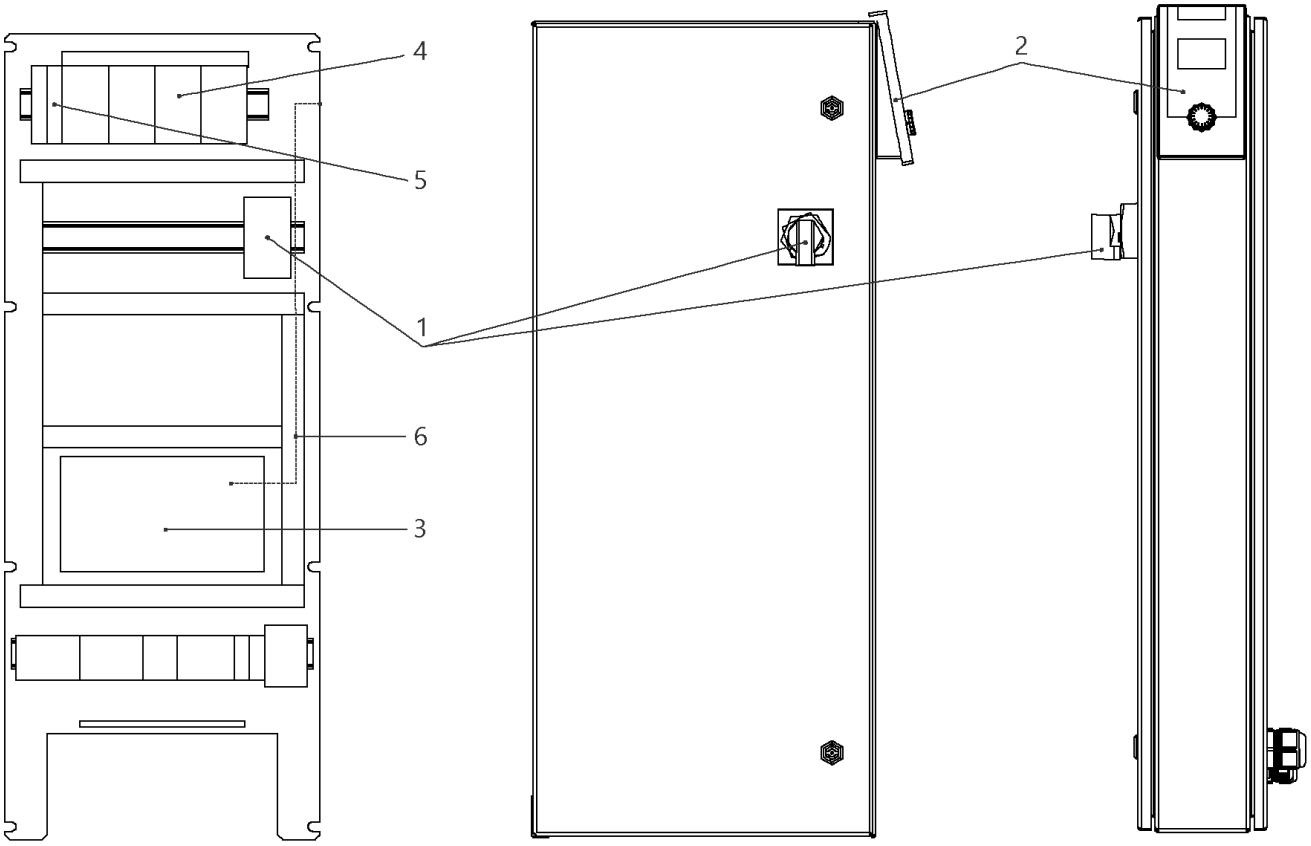
4
5
1
6
3
2

## W-CTRL-SCE-B-3x0,55-1,5KW-T4-FM-ND1

| Item | Article no. | Description | Quantity |
|---|---|---|---|
| 1 | 2104470 | MAIN SWITCH OT40F3 L250 KIT | 1 |
| 2 | 4184784 | CONTROL PANEL HMI SC KIT | 1 |
| 2 | 4185259 | ASSEMBLY DISPLAY SC PKG VP. | 1 |
| 3 | 4185257 | ASSEMBLY CPU SCe Booster VP. | 1 |
| 4 | 2051217 | AUTOM.CIRCUIT BREAKER S203 B16 TO7,5kW | 1 |
| 5 | 2046288 | CIRCUIT BREAKER S201 B16 | 1 |
| 6 | 4197081 | CABLE RJ45 CAT6 0,5M RED SC-PANEL VP. | 1 |

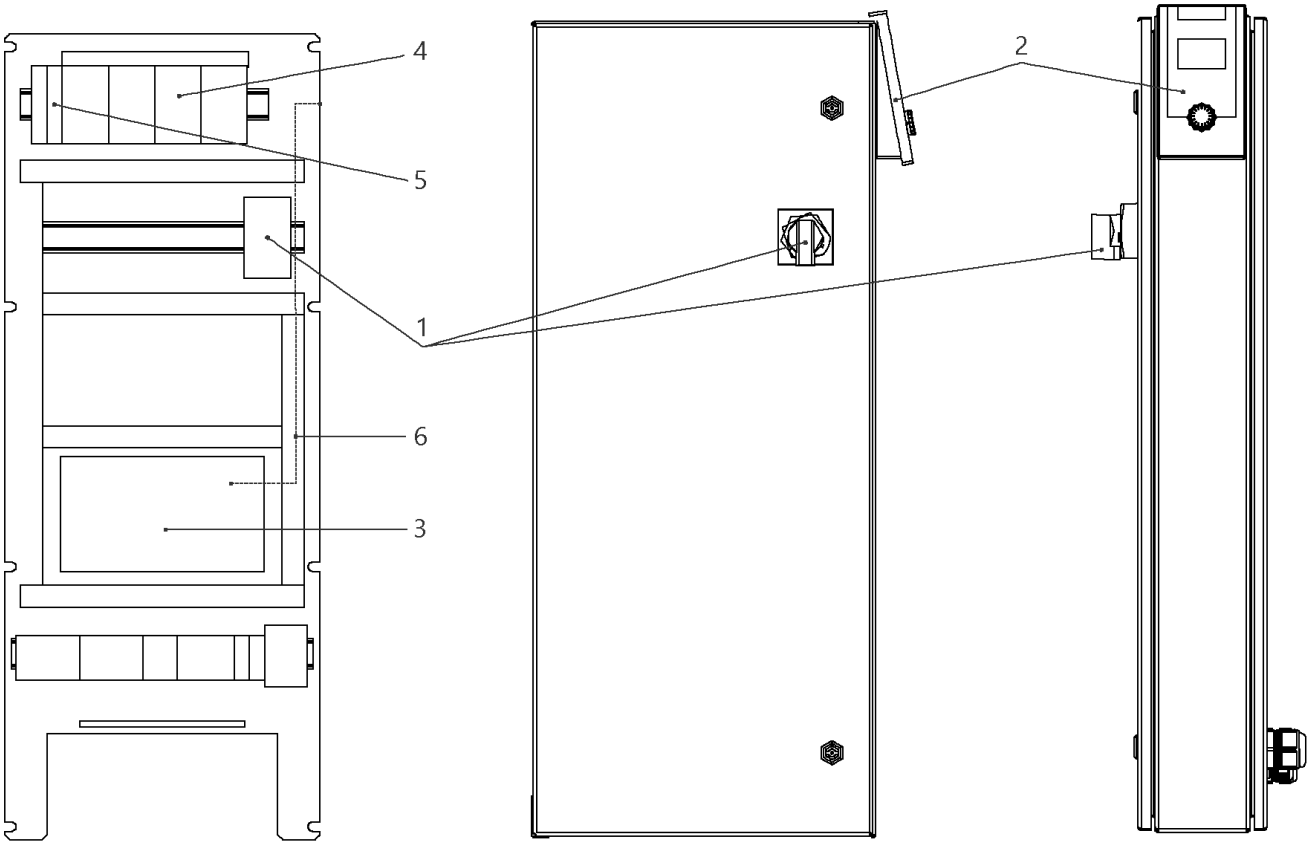
4
5
1
6
3
2

## W-CTRL-SCE-B-3x10A-T34-FM-ND1-AVC-PKG (2541914)

| Item | Article no. | Description | Quantity |
|---|---|---|---|
| 1 | 2104473 | MAIN SWITCH OT63F3 L105 KIT | 1 |
| Note: TO / BIS / JUSQU'AU 30/06/2015 | | | |
| 1 | 2104470 | MAIN SWITCH OT40F3 L250 KIT | 1 |
| Note: FROM / AB / À PARTIR DU 01/07/2015 | | | |
| 2 | 4184784 | CONTROL PANEL HMI SC KIT | 1 |
| 2 | 4185259 | ASSEMBLY DISPLAY SC PKG VP. | 1 |
| Note: DISPLAY ALONE / PLATINE SEULE | | | |
| 3 | 4185257 | ASSEMBLY CPU SCe Booster VP. | 1 |
| 4 | 2119861 | AUTOMATIC CIRCUIT BREAKER S203 B13 3POL. | 1 |
| 5 | 2046288 | CIRCUIT BREAKER S201 B16 | 1 |
| 6 | 4197081 | CABLE RJ45 CAT6 0,5M RED SC-PANEL VP. | 1 |

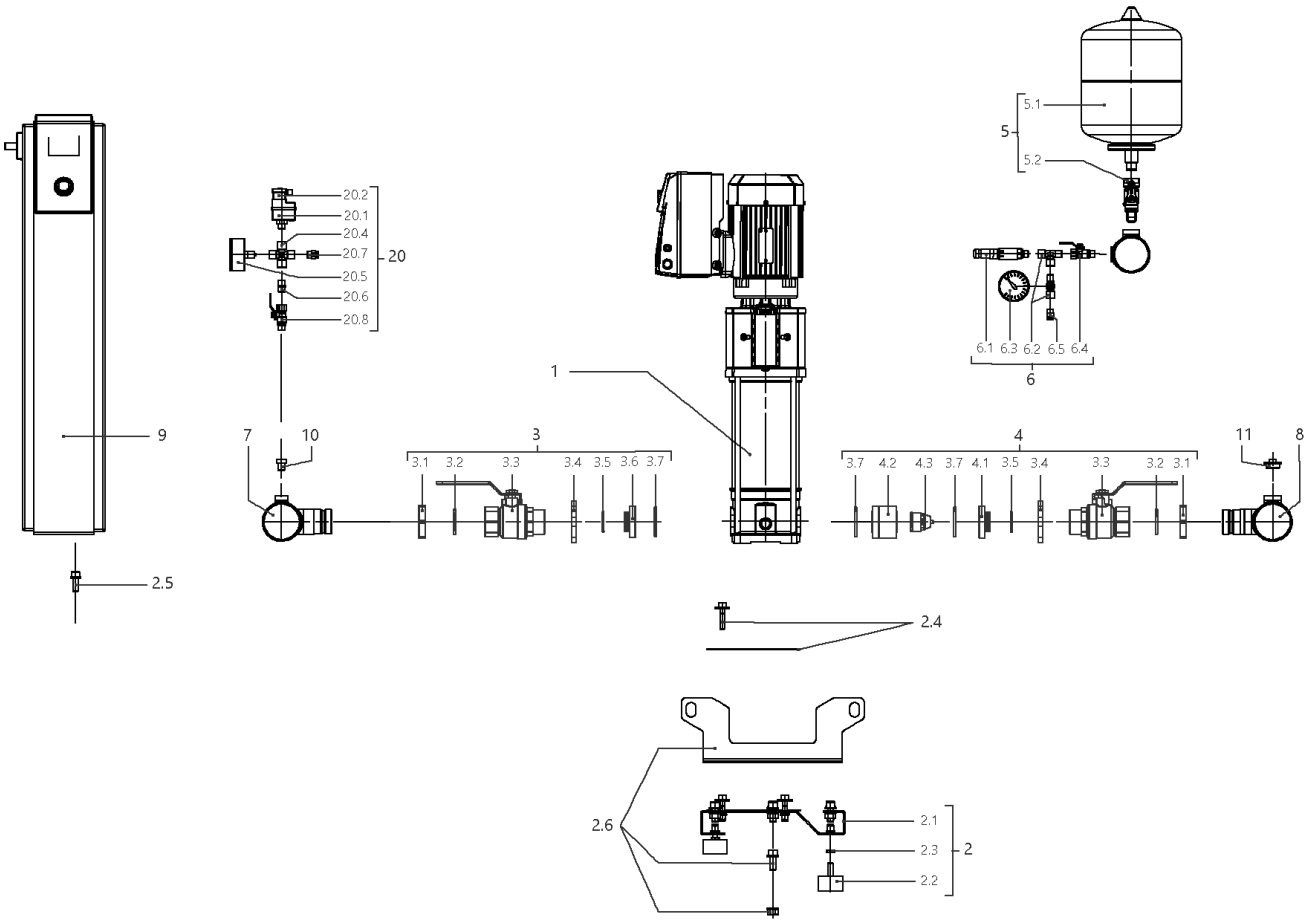
5.1
5
5.2
20.2
20.1
20.4
20.7
20
20.5
20.6
20.8
6.1 6.3 6.2 6.5 6.4
6
1
9
7
10
3
3.1 3.2 3.3 3.4 3.5 3.6 3.7
4
3.7 4.2 4.3 3.7 4.1 3.5 3.4 3.3 3.2 3.1
11
8
2.5
2.4
2.6
2.1
2.3
2
2.2

## SiBoost Smart 3HELIX VE606 (2536376)

| Item | Article no. | Description | Quantity |
|---|---|---|---|
| 1 | | HELIX VE606-1/16/E/S | 1 |
| Note: TO / BIS / JUSQU'AU 31/03/2016 | | | |
| 1 | 4201583 | HELIX VE606-1/16/E/S | 1 |
| Note: FROM / AB / À PARTIR DU 01/04/2016 | | | |
| 2 | 4200142 | BASE PLATE DE3 1150x420 KIT | 1 |
| Note: TO / BIS / JUSQU'AU 28/02/2013 | | | |
| 2.1 | | > BASEPLATE_3x4/6/10/16V_E300_BOX_150 | 1 |
| 2.2 | 2028654 | > VIBRATION DAMPER D.50X30 M10X28 | 1 |
| 2.3 | 2028281 | > NUT M10 DIN936 (ISO4035) 17H VZ | 1 |
| 2.4 | 4199875 | > HOLDER PUMP Siboost Helix V2/4 KIT | 1 |
| 2.5 | 4197084 | > HOLDER SWITCHBOX WILO Smart Control KIT | 1 |
| 2.6 | 4197117 | > LIFTING Siboost HELIX SC KIT | 1 |
| 2 | 4200137 | BASE PLATE DE3 1150x300 M10 KIT | 1 |
| Note: FROM / AB / À PARTIR DU 01/03/2013 | | | |
| 2.1 | | > BASEPLATE_3x4/6/10V_E300_1150x300BOX_150 | 1 |
| 2.2 | 2028654 | > VIBRATION DAMPER D.50X30 M10X28 | 1 |
| 2.3 | 2028281 | > NUT M10 DIN936 (ISO4035) 17H VZ | 1 |
| 2.4 | 4199875 | > HOLDER PUMP Siboost Helix V2/4 KIT | 1 |
| 2.5 | 4197084 | > HOLDER SWITCHBOX WILO Smart Control KIT | 1 |
| 2.6 | 4197085 | > LIFTING Siboost HELIX SC KIT | 1 |
| 3 | 4199876 | SUCTION SIDE Siboost Helix V2/4/6 KIT | 1 |
| 3.1 | 2032610 | > NUT G11/4 MS VP. | 1 |
| 3.2 | 2032611 | > O-RING ID.36,09X3,53N DIN3771 E7502 | 1 |
| 3.3 | 2507646 | > BALL VALVE G11/4"M-F-W.HANDLE 1/4-TURN | 1 |
| 3.4 | 2032613 | > SCREWED FLANGE G1 1/4" LK-75 ST37VZ | 1 |
| 3.5 | 2032614 | > O-RING ID.29,82X2,62N DIN3771 E7502 | 1 |
| 3.6 | 2032615 | > SPACER F.I/A KUH.DN32 CUZN | 1 |
| 3.7 | 2032616 | > O-RING ID.44X3,53N DIN3771 E7502 | 1 |
| 4 | 4199877 | DELIVERY SIDE Siboost Helix V2/4/6 KIT | 1 |
| 3.1 | 2032610 | > NUT G11/4 MS VP. | 1 |
| 3.2 | 2032611 | > O-RING ID.36,09X3,53N DIN3771 E7502 | 1 |
| 3.3 | 2507646 | > BALL VALVE G11/4"M-F-W.HANDLE 1/4-TURN | 1 |
| 3.4 | 2032613 | > SCREWED FLANGE G1 1/4" LK-75 ST37VZ | 1 |
| 3.5 | 2032614 | > O-RING ID.29,82X2,62N DIN3771 E7502 | 1 |

| Item | Article no. | Description | Quantity |
|---|---|---|---|
| 4.1 | 2058116 | > SPACER F.I/A KUH.DN32 CUZN | 1 |
| 3.7 | 2032616 | > O-RING ID.44X3,53N DIN3771 E7502 | 1 |
| 4.2 | 2058115 | > HOUSING RFV(RV-IN) DN32 SGS/DRS | 1 |
| 4.3 | 2027870 | > NON-RETURN-DEVICE INSERT DN32(MTR) | 1 |
| 5 | 2032642 | DIAPHREM TANK 8L/PN16 DIN4807/T5 KIT | 1 |
| 5.1 | 2045914 | > DIAPHREM TANK 8L TYP-DD 16BAR | 1 |
| 5.2 | 2027853 | > FLOW FITTING G3/4 FOR DIAPHRAGM VES. | 1 |
| 6 | 4197076 | PRESSURE SENSOR/ GAUGE 0-16BAR KIT | 1 |
| 6.1 | 2085909 | > PRESS.SENSOR 1/4" 0-16BAR 4-20MA VP. | 1 |
| 6.2 | 4197077 | > T-PIECE 1/4" VP. | 1 |
| 6.3 | 2028692 | > PRESSURE GAUGE NG63-PN16-G1/4 | 1 |
| 6.4 | 2028291 | > BALL TAP R1/4" PN42 GIACOMINI R254DL | 1 |
| 6.5 | 2028691 | > BLOWGUN 1/4" MS 30BAR VP. | 1 |
| 7 | 4200140 | PIPE DE3 21/2''-3x11/4"+2x1/4x900 VP. | 1 |
| 8 | 4200141 | PIPE DE3 21/2''-3x11/4"+2x1/4+1x3/4x900 | 1 |
| 9 | | W-CTRL-SCE-B-3x2,2KW-T4-FM-ND2 | 1 |
| Note: TO / BIS / JUSQU'AU 28/02/2013 | | | |
| 9 | | W-CTRL-SCE-B-3x2,2-3,0KW-T4-FM-ND1 | 1 |
| Note: FROM / AB / À PARTIR DU 01/03/2013 - TO / BIS / JUSQU'AU 18/05/2014 | | | |
| 9 | 2541914 | W-CTRL-SCE-B-3x10A-T34-FM-ND1-AVC-PKG | 1 |
| Note: FROM / AB / À PARTIR DU 19/05/2014 | | | |
| 10 | 4197079 | PLUG G1/4"x10 AISI304 KIT | 1 |
| 11 | 2032654 | PLUG R3/4" MS VIEGA 1751 | 1 |
| 20 | 2521150 | ASSEMBLY WMS. DE-EB. +VP | 1 |
| 20.1 | 2028652 | > PRESSURE SWITCH PS3-ASR 1/(1,3) VP. | 1 |
| 20.2 | 2130983 | > PLUG PS3-415 WITH KABEL 1,5M 2NO VP. | 1 |
| 20.4 | 2028290 | > CROSSPIECE R1/4" MS-NICKEL | 1 |
| 20.5 | 2028687 | > PRESSURE GAUGE NG63 R1/4" HI.0-6BAR | 1 |
| 20.6 | 2054268 | > DUAL NIPPLE G1/4" x G1/4" MS VP. | 1 |
| 20.7 | 2028691 | > BLOWGUN 1/4" MS 30BAR VP. | 1 |
| 20.8 | 2028291 | > BALL TAP R1/4" PN42 GIACOMINI R254DL | 1 |

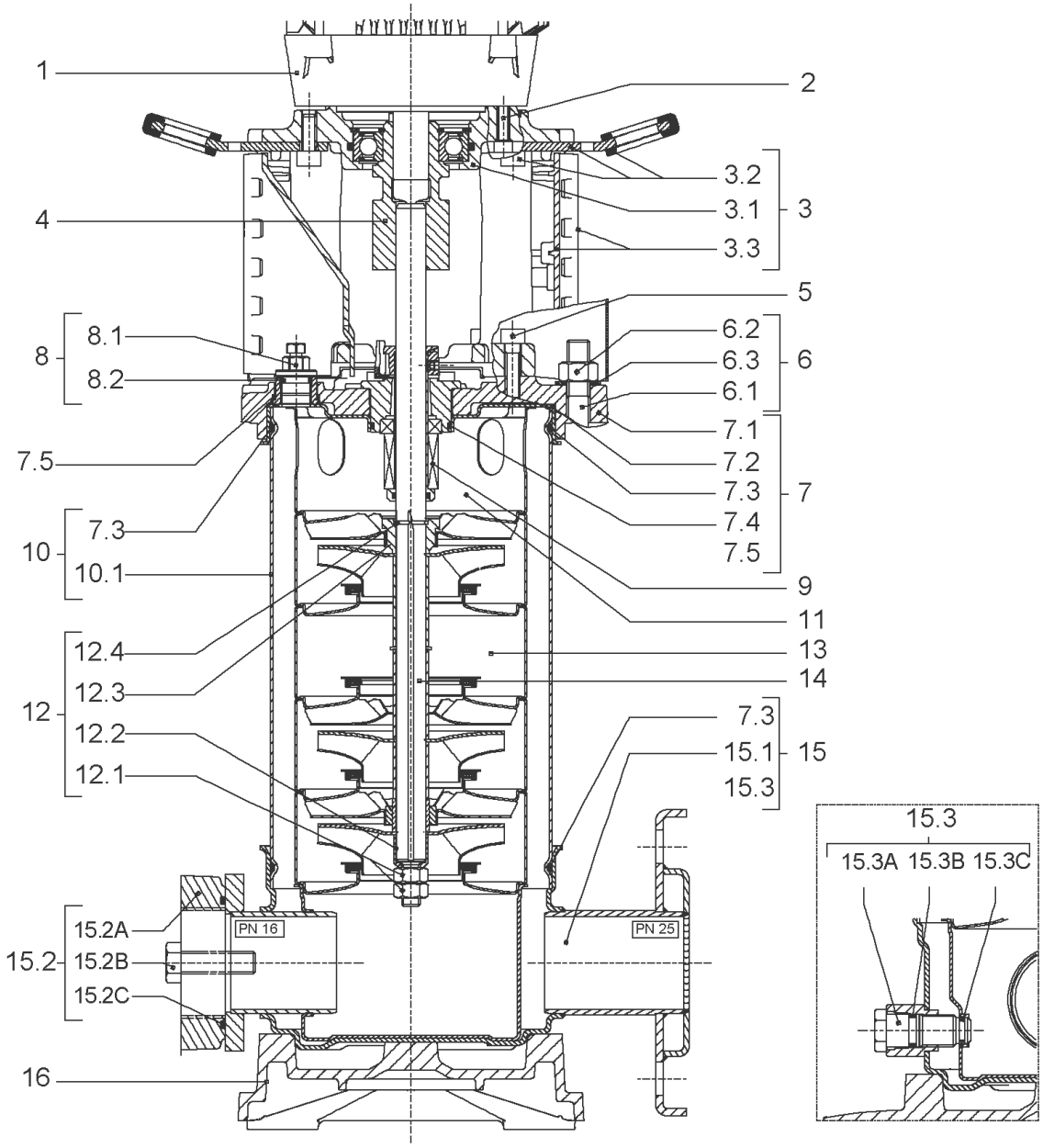
1
2
3.2
3.1
3
3.3
4
5
8.1
8
8.2
6.2
6.3
6
6.1
7.1
7.5
7.2
7.3
7
7.4
7.3
10
7.5
10.1
9
11
12.4
13
12.3
14
12
12.2
7.3
15.1
15
12.1
15.3
15.3
15.3A 15.3B 15.3C
15.2A
PN 16
PN 25
15.2
15.2B
15.2C
16

| Item | Article no. | Description | Quantity |
|---|---|---|---|
| 1 | | DRIVE HELIX-VE606-IE2-WE KIT | 1 |
| Note: MOTOR BRAND WILO ELEC | | | |
| 1 | | DRIVE HELIX-VE606-IE4-WE KIT | 1 |
| Note: MOTOR BRAND WILO ELEC | | | |
| 2 | 4159703 | SCREW M8X40 (4 PIECES) | 1 |
| 3 | 4172795 | LANTERNE FT115 HELIX KIT | 1 |
| 3.1 | | > M+5_6_LANTERN_ONE-PIECE_FT115_CATA | 1 |
| 3.2 | 2127604 | > EYELET CPL.FT HELIX(2 PIECES) | 1 |
| 3.3 | 4159692 | > COUPLING PROTECTOR FT HELIX KIT | 1 |
| 4 | 4159709 | COUPLING D.16xD.24 FT115 HELIX KIT | 1 |
| 5 | 4159707 | SCREW M8X30 (4 PIECES) | 1 |
| 6 | 4177822 | STUD BOLT M12X413 KIT | 1 |
| 6.1 | | > TIE BOLT M12-413x18x30-1.4057 | 1 |
| 6.2 | 2094647 | > NUT M12 M12 ISO4032 VP. | 1 |
| 6.3 | 2123557 | > WASHER CS-12.4-24-1.6-NFE25 (4 PIECES) | 1 |
| 7 | 4210143 | STATIONARY RING HOLDER HELIX 6" EPDM | 1 |
| 7.2 | 2127607 | > STATIONARY RING HOLDER 6" HELIX 1.4301 V | 1 |
| 7.3 | 4176513 | > O-RING FOR PUMP JACKET VP. | 1 |
| 7.4 | 2127603 | > O-RING ID.37,6x2,4 EPDM VP. | 1 |
| 7.5 | 2127602 | > O-RING ID.21,35x2 EPDM VP. | 1 |
| 8 | 4159686 | FILING/PURGING PLUG HELIX EPDM KIT | 1 |
| 9 | 4171327 | SEAL-KIT-HELIX6-10-16 O/E KIT | 1 |
| 10 | 4177823 | HOUSING PIPES D.152X285 1.4301 KIT | 1 |
| 7.3 | 4176513 | > O-RING FOR PUMP JACKET VP. | 1 |
| 10.1 | | > HOUSING-PIPE Ø152-M+1006-304 | 1 |
| 11 | 4174087 | CENTERING STAGE-RETURN HELIX6 1.4301VP. | 1 |
| 12 | 4174086 | SHAFTS EQUIPMENT HELIX V6 MONOBLOC KIT | 1 |
| 12.1 | | > NUT-H-M10-A4.70 | 1 |
| 12.2 | | > SERRATED LOCK WASHER M+6M3-316L | 1 |
| 12.3 | | > IMPELLER STOP RING L33,2-304 | 1 |
| 12.4 | | > STOP-RUSH-1/2-D16xd2-M+316 | 1 |
| 13 | | HYDRAULIC HELIX V 606 1.4307 | 1 |
| 14 | 4177825 | SHAFT D.16X405 1.4301 VP. | 1 |
| 15 | 4217897 | PUMP HOUSING HELIX DN32 PN16 1.4301 KIT | 1 |

| Item | Article no. | Description | Quantity |
|---|---|---|---|
| 7.3 | 4176513 | > O-RING FOR PUMP JACKET VP. | 1 |
| 15.1 | | > BLASTING PPE HOUSING V-PN16-DN32-5"-304 | 1 |
| 15.2 | 4217891 | > COUNTER FLANGE-G1"1/4-PN16-GJL KIT | 1 |
| 15.3 | 4171321 | > PRIMING/DRAIN PLUG EPDM HELIX KIT | 1 |
| 16 | 4177964 | BASEPLATE HELIX V2/4/6 PN16 VP. | 1 |

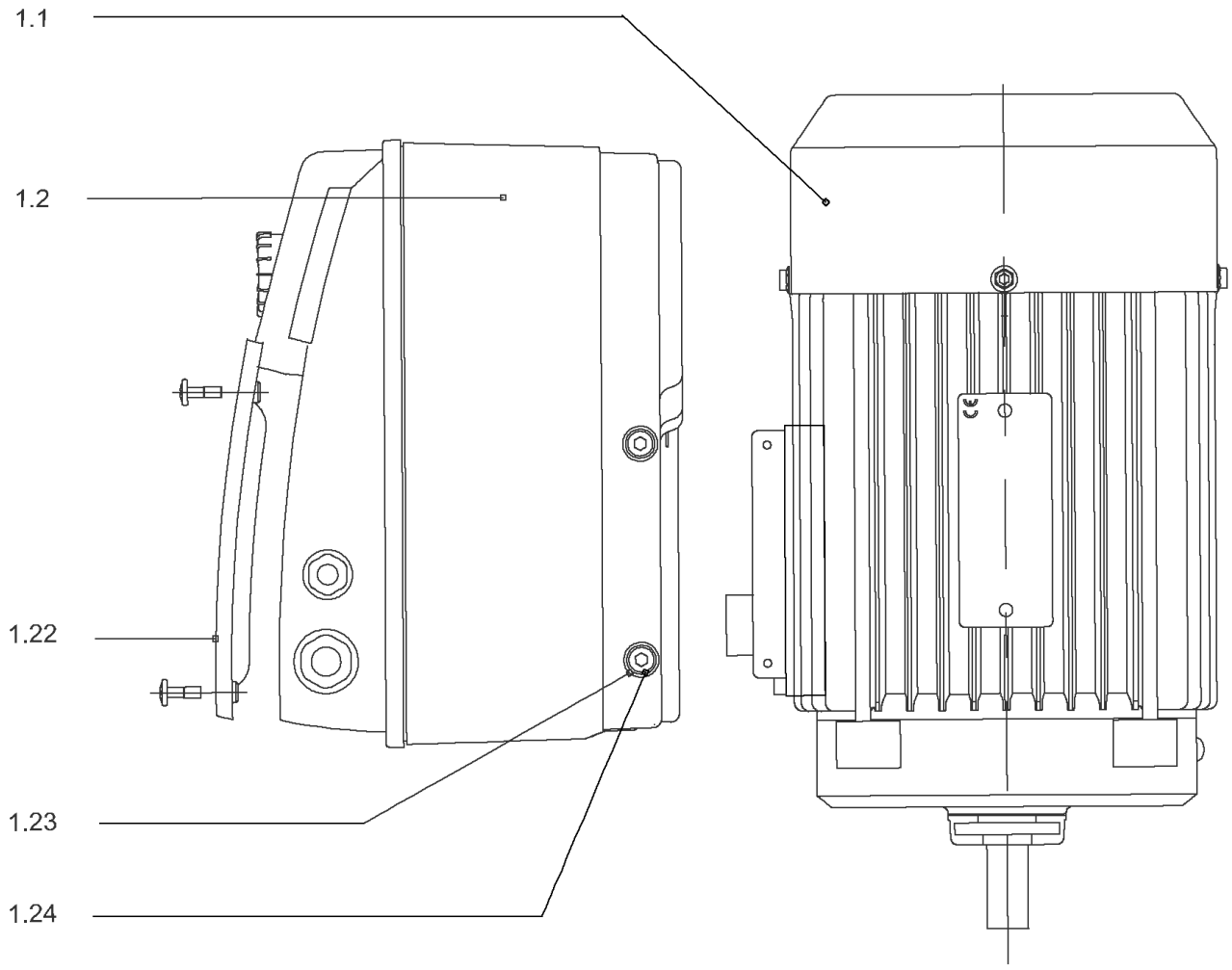
1.1
1.2
1.22
1.23
1.24

## DRIVE HELIX-VE606-IE2-WE KIT

| Item | Article no. | Description | Quantity |
|---|---|---|---|
| 1.1 | 4185016 | MOTOR 2,2/2/90 3~ 380V 60HZ IE2 WE VP. | 1 |
| | | SPARE PARTS MOTOR:ON REQUEST | 1 |
| 1.2 | 4186769 | MODULE HELIX-VE606-IE2-WE KIT | 1 |
| 1.22 | 2054227 | > MODULE COVER/GASKET TL3/4 KIT | 1 |
| 1.23 | 4215716 | > SCREW M5X16 DIN912 8.8 A2A (4pieces) VP. | 1 |
| 1.24 | 2057978 | > RONDELLE A5,3 DIN6797 FST ZN (4 PIECES) | 1 |

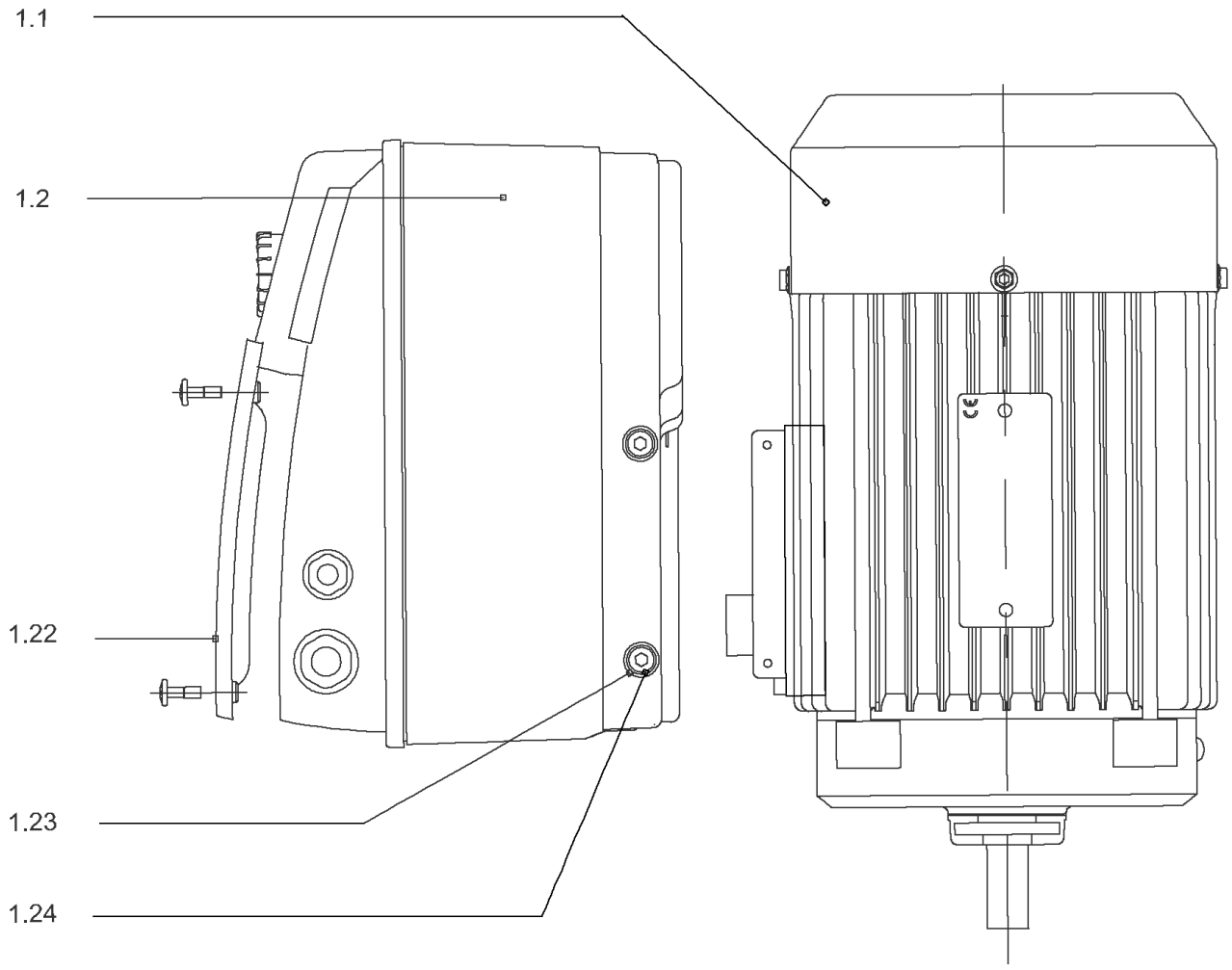
1.1
1.2
1.22
1.23
1.24

## DRIVE HELIX-VE606-IE4-WE KIT

| Item | Article no. | Description | Quantity |
|---|---|---|---|
| 1.1 | 4207920 | MOTOR 2.2/2/90 3~ 380V 60HZ IE4 WE VP. | 1 |
| | | SPARE PARTS MOTOR:ON REQUEST | 1 |
| 1.2 | 4209368 | MODULE HELIX-VE606-IE4-WE KIT | 1 |
| 1.22 | 2054227 | > MODULE COVER/GASKET TL3/4 KIT | 1 |
| 1.23 | 4215716 | > SCREW M5X16 DIN912 8.8 A2A (4pieces) VP. | 1 |
| 1.24 | 2057978 | > RONDELLE A5,3 DIN6797 FST ZN (4 PIECES) | 1 |

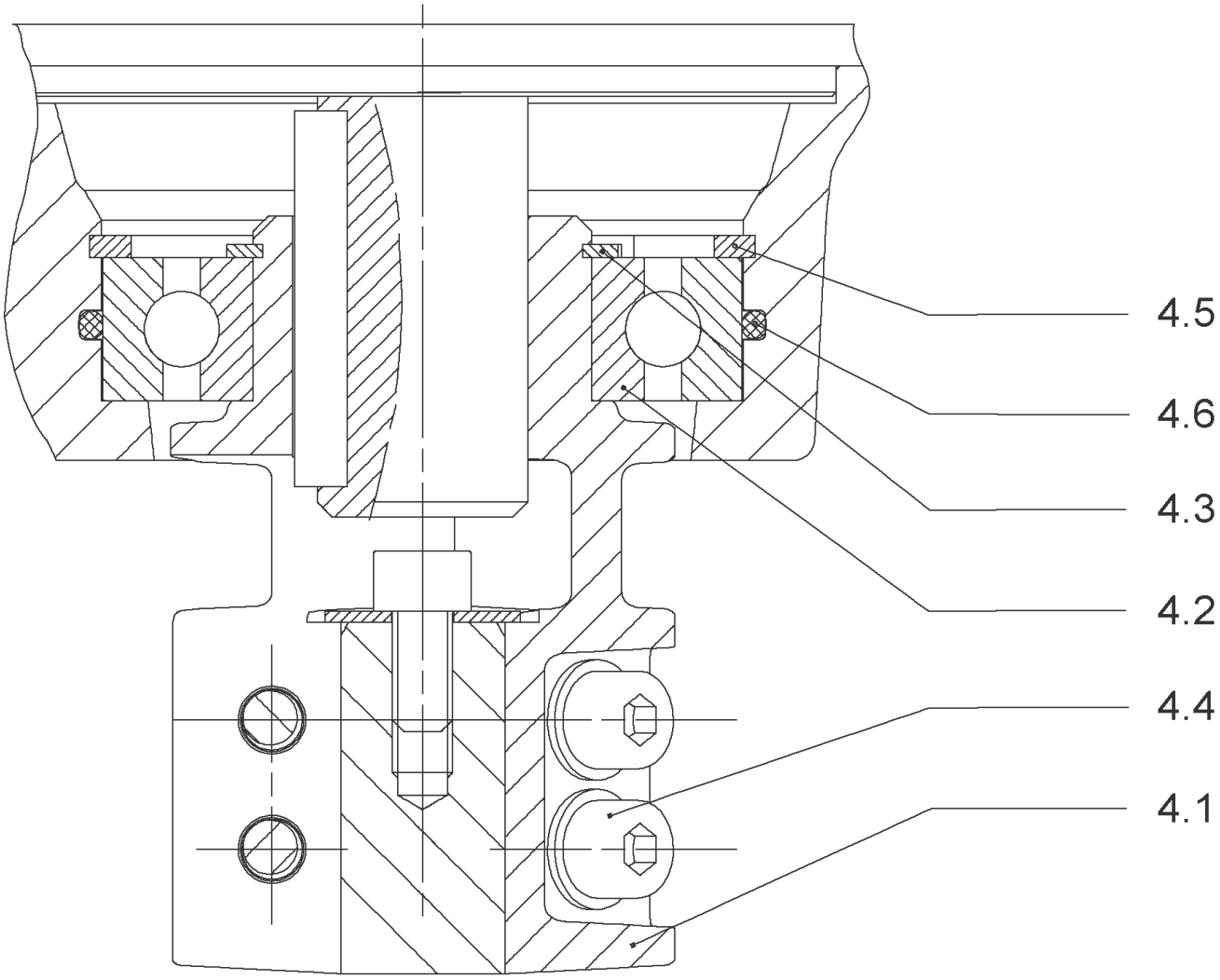
4.5
4.6
4.3
4.2
4.4
4.1

## COUPLING D.16xD.24 FT115 HELIX KIT (4159709)

| Item | Article no. | Description | Quantity |
|---|---|---|---|
| 4.1 | | COUPLING M+ Ø16XØ24 FT115 MACHINED | 1 |
| 4.2 | 2131023 | BALL BEARING 6207/ZZ-C3(HT)VP. | 1 |
| 4.3 | 4234254 | CIRCLIP-FOR-SHAFT-D35x1.5 VP. | 1 |
| 4.4 | 4157726 | SCREW KIT M8X30 (4 PIECES) | 1 |
| 4.5 | 4234251 | CIRCLIP-D72x2.5 VP. | 1 |
| 4.6 | 4234246 | O-RING 72X3 VP. | 1 |
| | | NOMEL CONTACT WASHER 8x16x1,4 STEEL ZC | 1 |

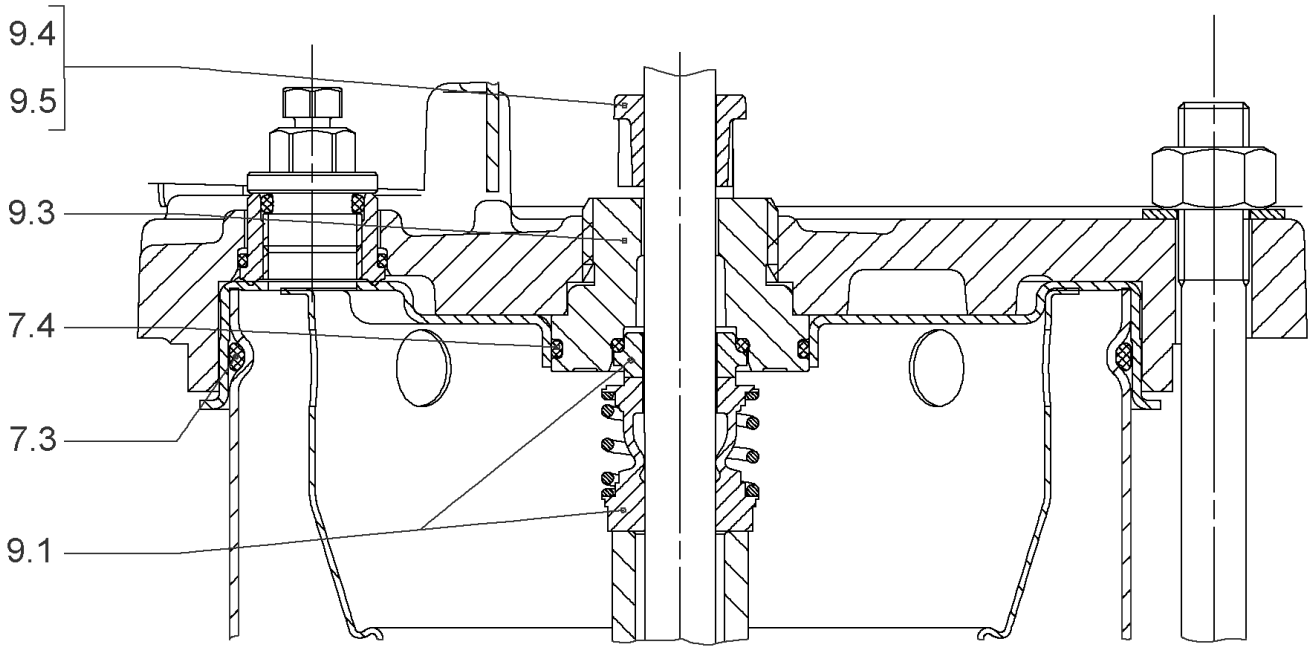
9.4
9.5
9.3
7.4
7.3
9.1

## SEAL-KIT-HELIX6-10-16 O/E KIT (4171327)

| Item | Article no. | Description | Quantity |
|---|---|---|---|
| 7.3 | 4176513 | O-RING FOR PUMP JACKET VP. | 1 |
| 7.4 | 2127603 | O-RING ID.37,6x2,4 EPDM VP. | 1 |
| 9.1 | 4177801 | MECH.SEAL HELIX6-10-16 O/E VP. | 1 |
| 9.3 | 4177798 | MACHINED RING HOLDER M+6" Ø16 304 VP. | 1 |
| 9.5 | 4177799 | MACHINED DRIVE RING Ø16 VP. | 1 |
| 9.4 | 4176520 | SCREW CH M5x5 A4-70 ( 3PIECES ) | 1 |

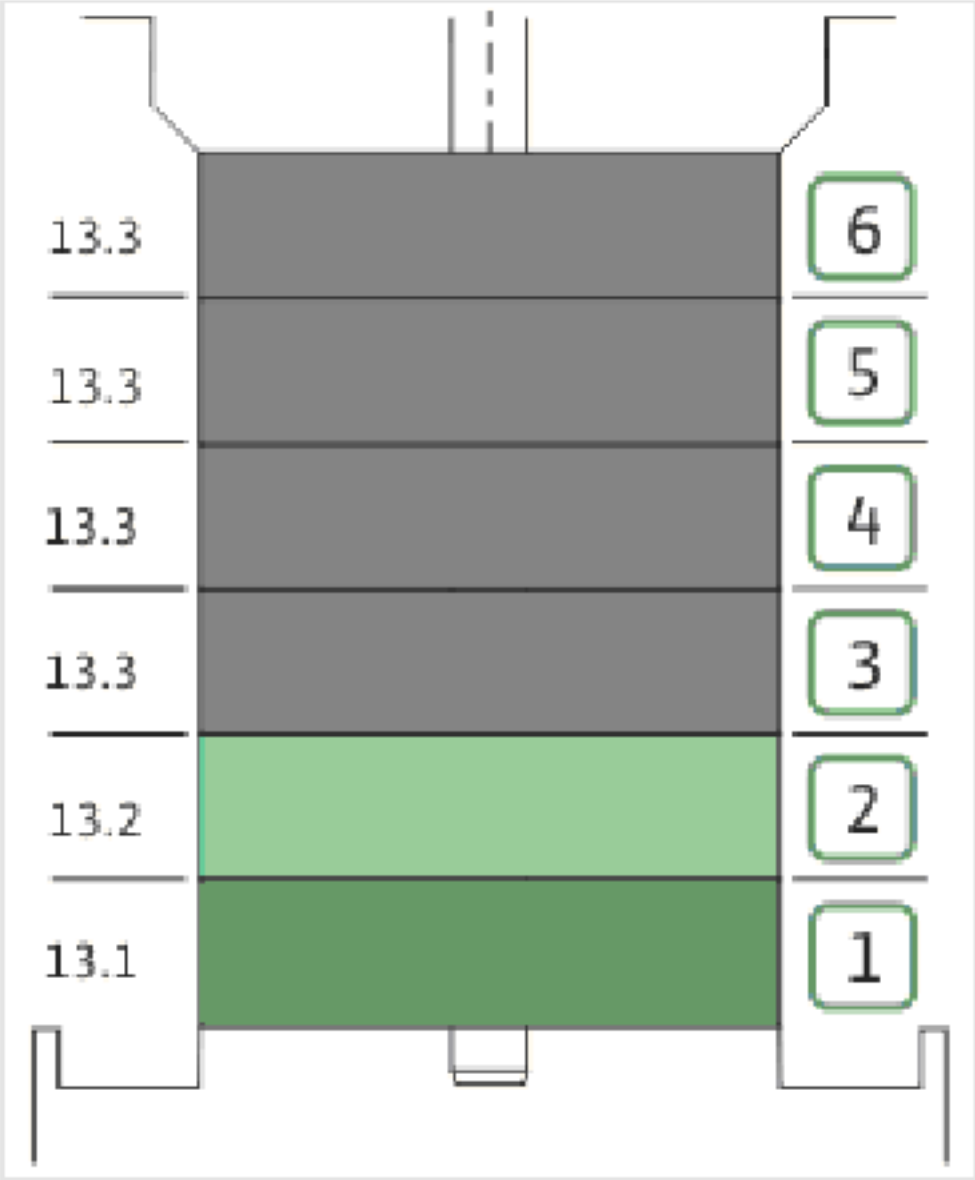
13.3
13.3
13.3
13.3
13.2
13.1
6
5
4
3
2
1

| Item | Article no. | Description | Quantity |
|---|---|---|---|
| 13.1 | 4174084 | STAGE HELIX 6 1.4301 KIT | 1 |
| | | > MACH.STG-CASING-WOGV-WNR-M+6-304 | 1 |
| | | > IMPELLER-M+6-304 | 1 |
| 13.2 | 4174089 | INTERMEDIATE STAGE HELIX 6 1.4301 KIT | 1 |
| | | > MACH.BEARING-STG-CASING-WNR-M+6-304 | 1 |
| | | > IMPELLER-M+6-304 | 1 |
| | | > SHAFT SLEEVE-SPACER-Ø19,35x18,465-304 | 1 |
| | | > SHAFT-SLEEVE-D16xD20x18-CW | 1 |
| 13.3 | 4174090 | INTERMEDIATE STAGE HELIX 6 1.4301 KIT | 1 |
| | | > MACH.STD-STG-CASING-WGV+NR-M+6-304 | 1 |
| | | > IMPELLER-M+6-304 | 1 |
| | | > IMPELLER SPACER Ø16,05X19,45-L36,465-304 | 1 |

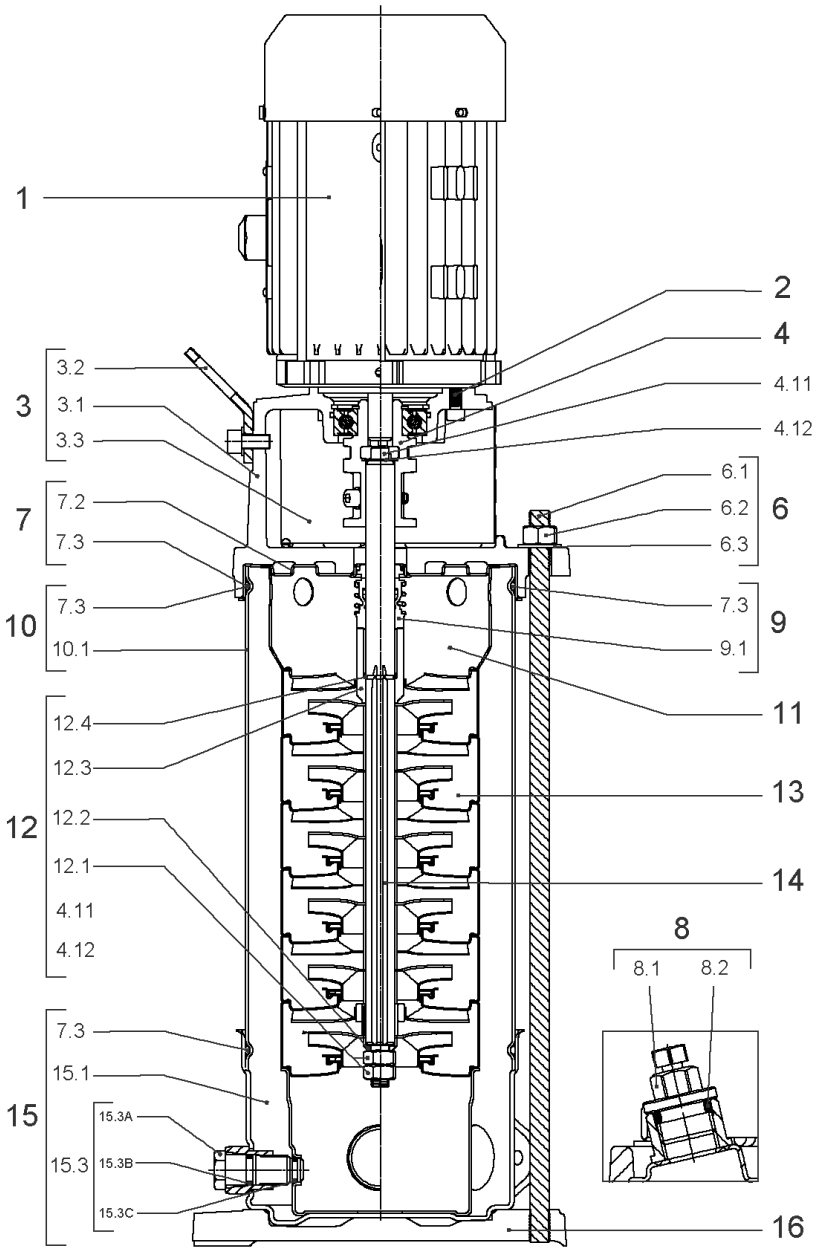
1
2
4
4.11
4.12
3
3.2
3.1
3.3
7
7.2
7.3
6
6.1
6.2
6.3
10
7.3
10.1
9
7.3
9.1
11
12
12.4
12.3
12.2
12.1
4.11
4.12
13
14
8
8.1
8.2
15
7.3
15.1
15.3
15.3A
15.3B
15.3C
16

## HELIX VE606-1/16/E/S (4201583)

| Item | Article no. | Description | Quantity |
|---|---|---|---|
| 1 | | DRIVE HELIX-VE606-IE4-WE KIT | 1 |
| Note: MOTOR BRAND WILO ELEC | | | |
| | | SPARE PARTS MOTOR:ON REQUEST | 1 |
| 2 | 4159707 | SCREW M8X30 (4 PIECES) | 1 |
| 3 | 4213784 | LANTERN FT115 HELIX KIT | 1 |
| 3.1 | | > LANT-MOT-VMI-ReDTC6"-FT115-MACHINED+CATA | 1 |
| 3.2 | 4184852 | > EYELET CPL.FT HELIX (2 PIECES) | 1 |
| 3.3 | 4213782 | > COUPLING PROTECTOR FT115/130 HELIX KIT | 1 |
| 4 | 4159709 | COUPLING D.16xD.24 FT115 HELIX KIT | 1 |
| 6 | 4177822 | STUD BOLT M12X413 KIT | 1 |
| 6.1 | | > TIE BOLT M12-413x18x30-1.4057 | 1 |
| 6.2 | 2094647 | > NUT M12 M12 ISO4032 VP. | 1 |
| 6.3 | 2123557 | > WASHER CS-12.4-24-1.6-NFE25 (4 PIECES) | 1 |
| 7 | 4214481 | STATIONARY RING HOLDER HELIX D27 ReDTC | 1 |
| 7.2 | 4214479 | > STATIONARY RING HOLDER HELIX D27 VP. | 1 |
| 7.3 | 4176513 | > O-RING FOR PUMP JACKET VP. | 1 |
| 8 | 4212724 | FILING/PURGING PLUG HELIX ReDTC KIT | 1 |
| 8.1 | | > FILLING PLUG MVI6"-304 | 1 |
| 8.2 | 4177800 | > O-RING EPDM PLUG HELIX VP. | 1 |
| 9 | 4214483 | MECH.SEAL HELIX6-10-16 O/E ReDTC KIT | 1 |
| 9.1 | 4177801 | > MECH.SEAL HELIX6-10-16 O/E VP. | 1 |
| 7.3 | 4176513 | > O-RING FOR PUMP JACKET VP. | 1 |
| 10 | 4177823 | HOUSING PIPES D.152X285 1.4301 KIT | 1 |
| 7.3 | 4176513 | > O-RING FOR PUMP JACKET VP. | 1 |
| 10.1 | | > HOUSING-PIPE Ø152-M+1006-304 | 1 |
| 11 | 4174087 | CENTERING STAGE-RETURN HELIX6 1.4301VP. | 1 |
| 12 | 4214486 | SHAFT EQUIPMENT HELIX V6 ReDTC KIT | 1 |
| 12.1 | | > NUT-H-M10-A4.70 | 1 |
| 12.2 | | > SERRATED LOCK WASHER M+6M3-316L | 1 |
| 12.3 | | > 1/2-SNAP-RING-6/10M3-316L | 1 |
| 12.4 | | > STOP-RUSH-1/2-D16xd2-M+316 | 1 |
| 4.11 | | > SCREW CHC-M6X14-8.8-ISO4762-GEOMET500A | 1 |
| 4.12 | | > WASHER D.24 L6U ZINK | 1 |
| 13 | | HYDRAULIC HELIX V 606 1.4307 | 1 |

| Item | Article no. | Description | Quantity |
|---|---|---|---|
| 14 | 4214500 | SHAFT D.16X353 HELIX 1.4057 VP. | 1 |
| 15 | 4217897 | PUMP HOUSING HELIX DN32 PN16 1.4301 KIT | 1 |
| 7.3 | 4176513 | > O-RING FOR PUMP JACKET VP. | 1 |
| 15.1 | | > BLASTING PPE HOUSING V-PN16-DN32-5"-304 | 1 |
| 15.2 | 4217891 | > COUNTER FLANGE-G1"1/4-PN16-GJL KIT | 1 |
| 15.3 | 4171321 | > PRIMING/DRAIN PLUG EPDM HELIX KIT | 1 |
| 16 | 4177964 | BASEPLATE HELIX V2/4/6 PN16 VP. | 1 |

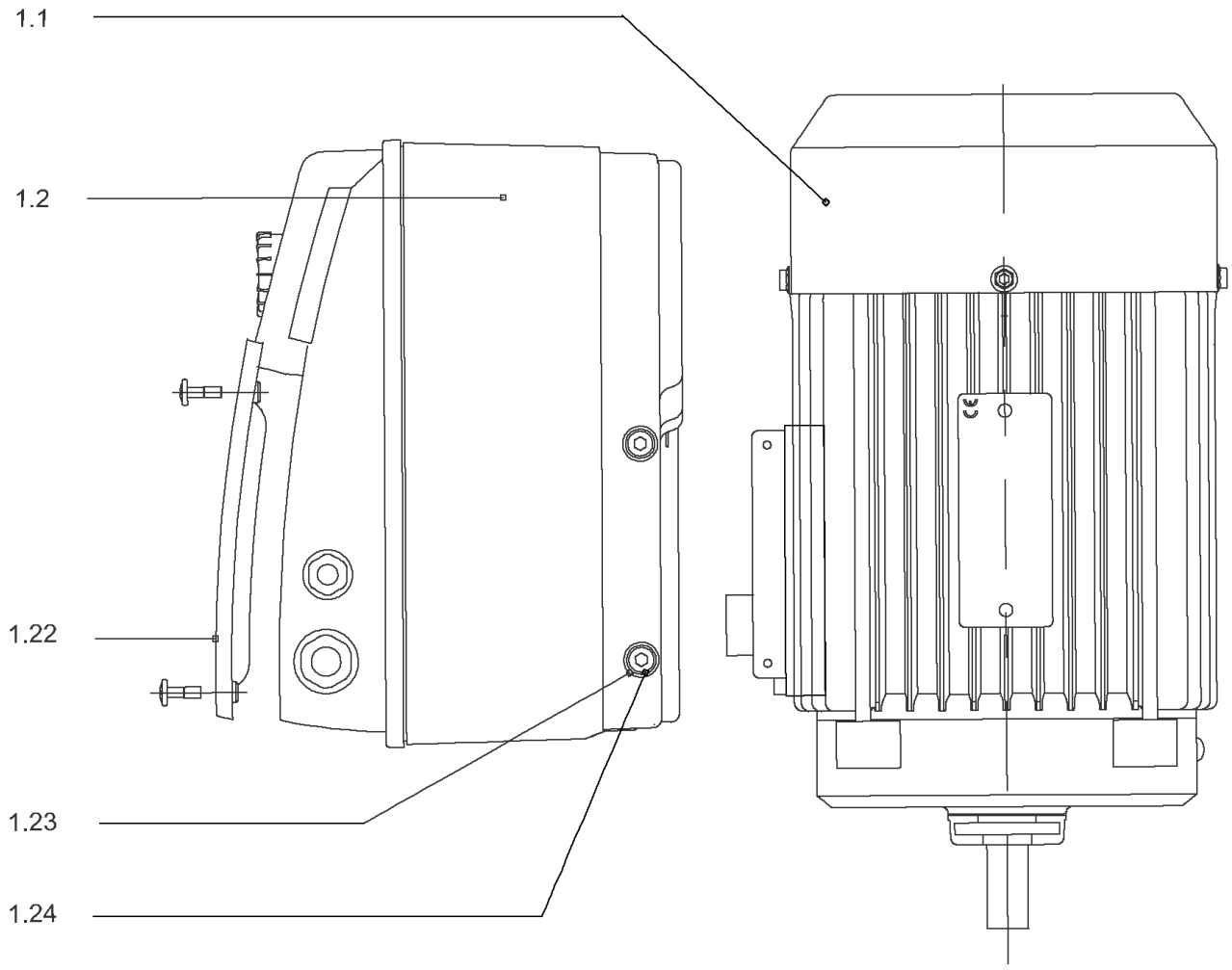
1.1
1.2
1.22
1.23
1.24

## DRIVE HELIX-VE606-IE4-WE KIT

| Item | Article no. | Description | Quantity |
|---|---|---|---|
| 1.1 | 4207920 | MOTOR 2.2/2/90 3~ 380V 60HZ IE4 WE VP. | 1 |
| | | SPARE PARTS MOTOR:ON REQUEST | 1 |
| 1.2 | 4209368 | MODULE HELIX-VE606-IE4-WE KIT | 1 |
| 1.22 | 2054227 | > MODULE COVER/GASKET TL3/4 KIT | 1 |
| 1.23 | 4215716 | > SCREW M5X16 DIN912 8.8 A2A (4pieces) VP. | 1 |
| 1.24 | 2057978 | > RONDELLE A5,3 DIN6797 FST ZN (4 PIECES) | 1 |

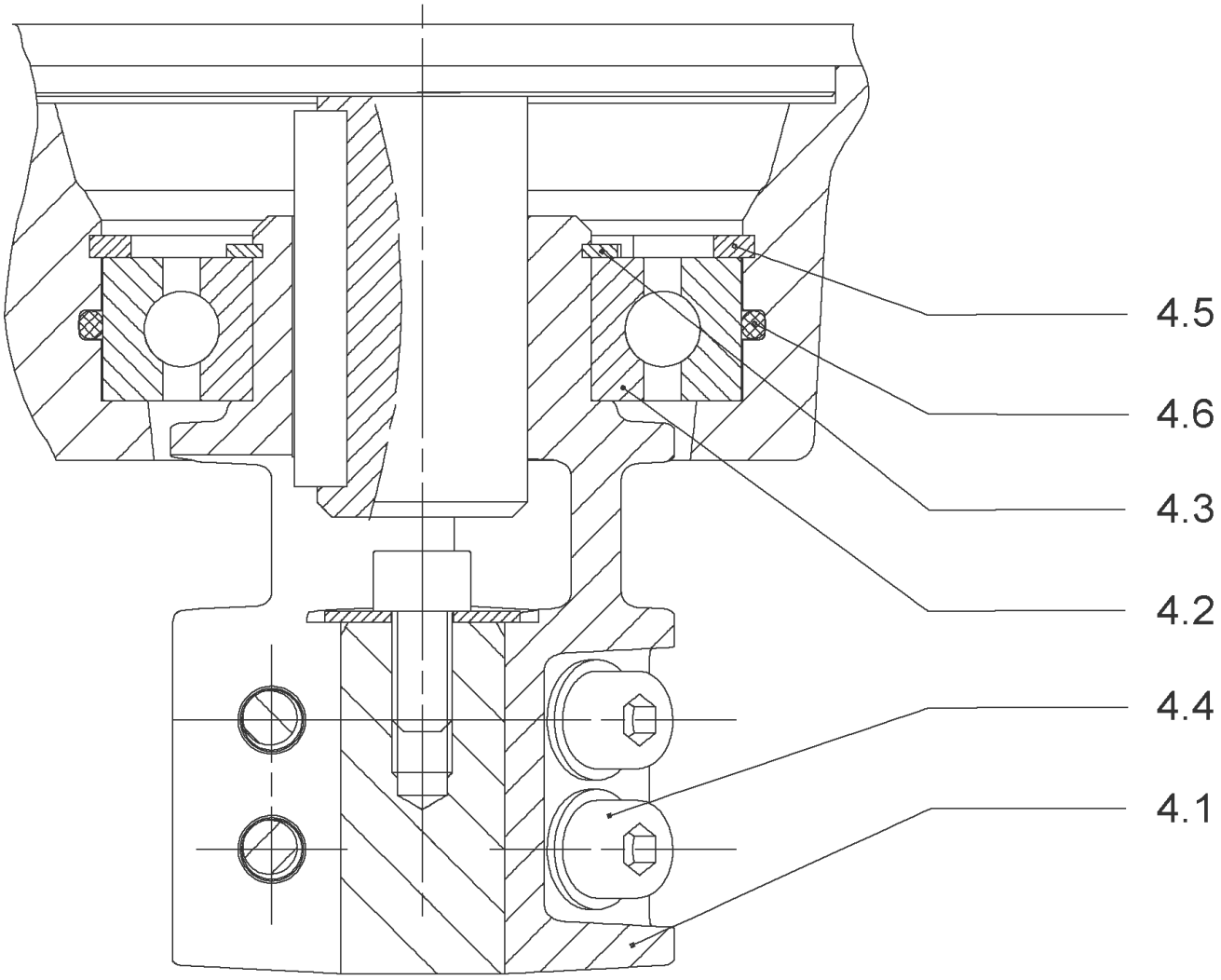
4.5
4.6
4.3
4.2
4.4
4.1

## COUPLING D.16xD.24 FT115 HELIX KIT (4159709)

| Item | Article no. | Description | Quantity |
|---|---|---|---|
| 4.1 | | COUPLING M+ Ø16XØ24 FT115 MACHINED | 1 |
| 4.2 | 2131023 | BALL BEARING 6207/ZZ-C3(HT)VP. | 1 |
| 4.3 | 4234254 | CIRCLIP-FOR-SHAFT-D35x1.5 VP. | 1 |
| 4.4 | 4157726 | SCREW KIT M8X30 (4 PIECES) | 1 |
| 4.5 | 4234251 | CIRCLIP-D72x2.5 VP. | 1 |
| 4.6 | 4234246 | O-RING 72X3 VP. | 1 |
| | | NOMEL CONTACT WASHER 8x16x1,4 STEEL ZC | 1 |

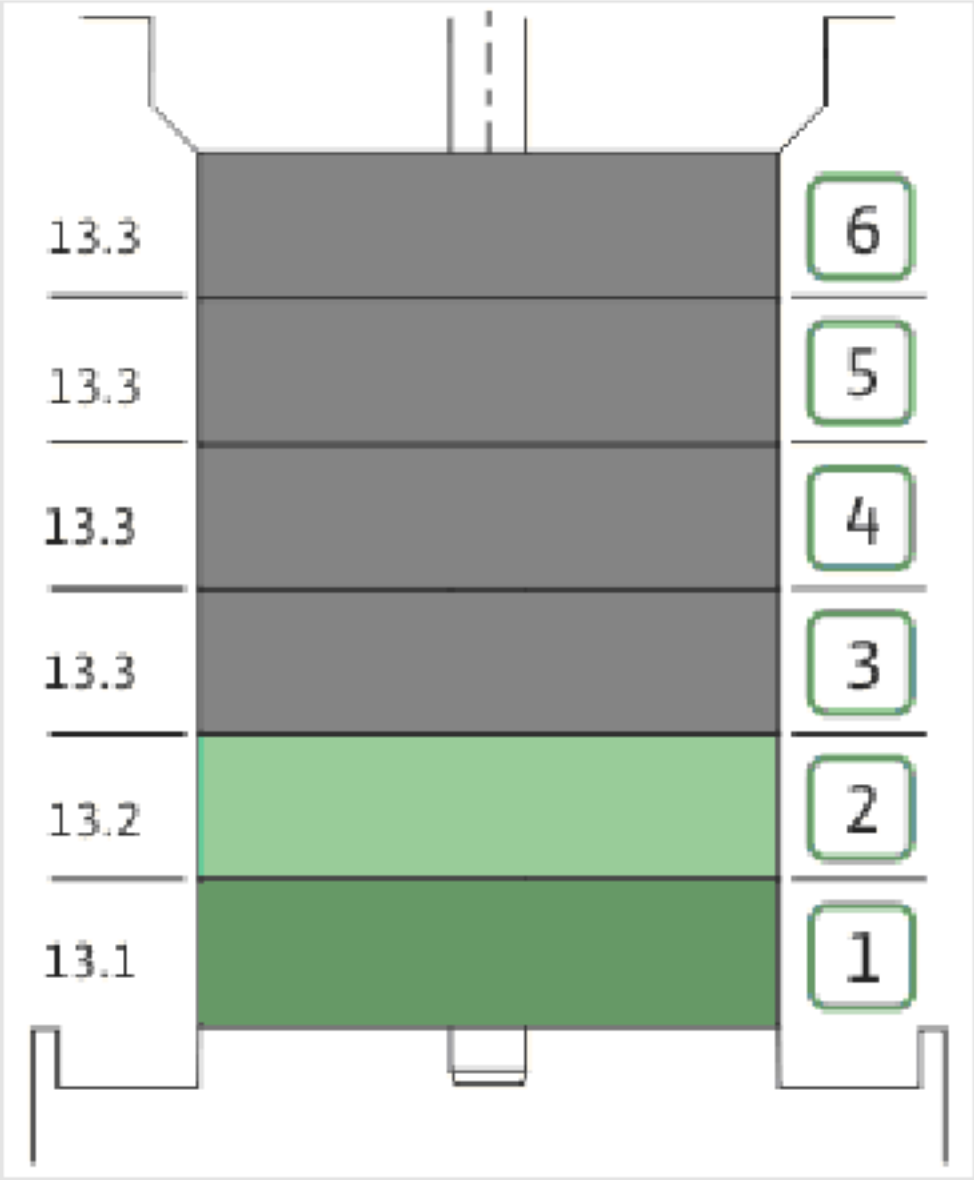
13.3
13.3
13.3
13.3
13.2
13.1
6
5
4
3
2
1

| Item | Article no. | Description | Quantity |
|---|---|---|---|
| 13.1 | 4174084 | STAGE HELIX 6 1.4301 KIT | 1 |
| | | > MACH.STG-CASING-WOGV-WNR-M+6-304 | 1 |
| | | > IMPELLER-M+6-304 | 1 |
| 13.2 | 4174089 | INTERMEDIATE STAGE HELIX 6 1.4301 KIT | 1 |
| | | > MACH.BEARING-STG-CASING-WNR-M+6-304 | 1 |
| | | > IMPELLER-M+6-304 | 1 |
| | | > SHAFT SLEEVE-SPACER-Ø19,35x18,465-304 | 1 |
| | | > SHAFT-SLEEVE-D16xD20x18-CW | 1 |
| 13.3 | 4174090 | INTERMEDIATE STAGE HELIX 6 1.4301 KIT | 1 |
| | | > MACH.STD-STG-CASING-WGV+NR-M+6-304 | 1 |
| | | > IMPELLER-M+6-304 | 1 |
| | | > IMPELLER SPACER Ø16,05X19,45-L36,465-304 | 1 |

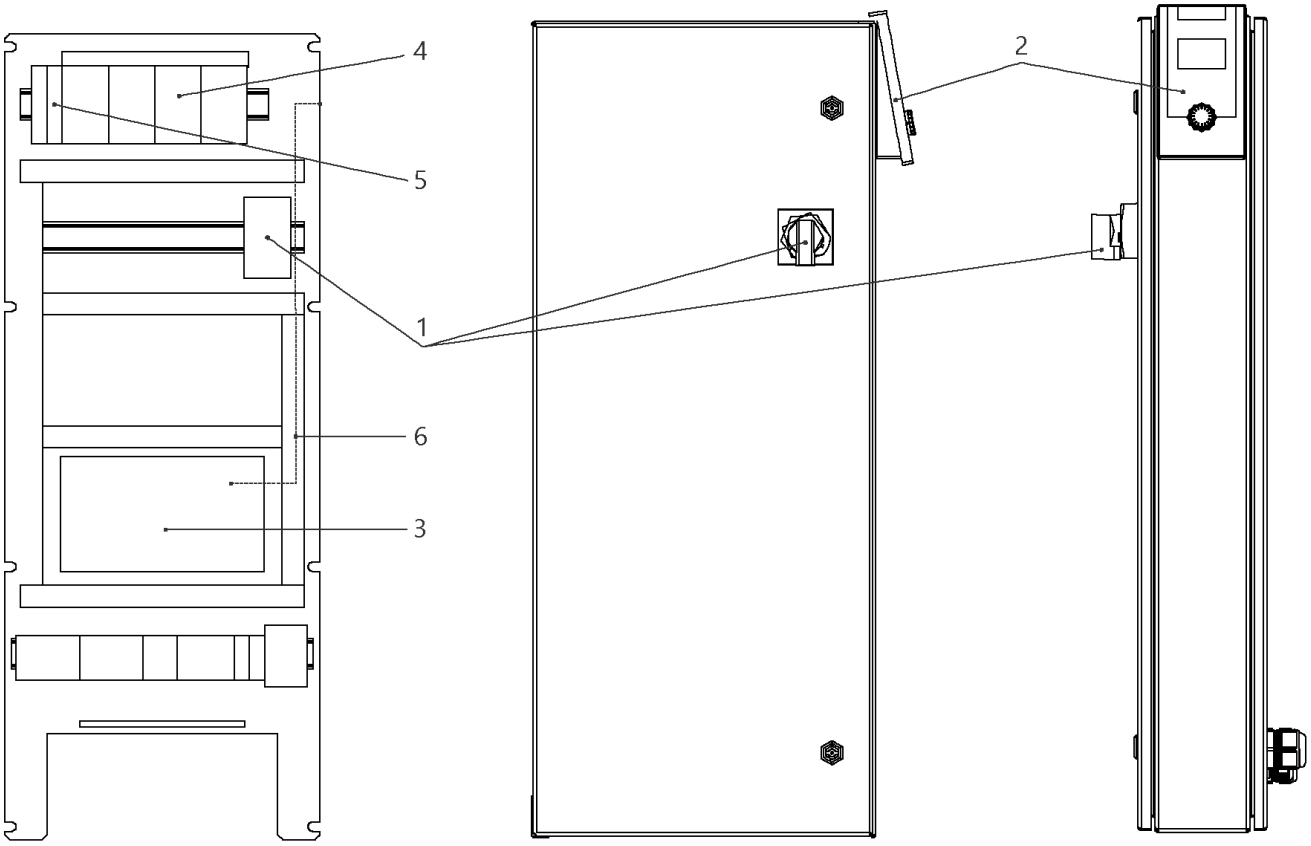
4
5
1
6
3
2

## W-CTRL-SCE-B-3x2,2KW-T4-FM-ND2

| Item | Article no. | Description | Quantity |
|---|---|---|---|
| 1 | 2104470 | MAIN SWITCH OT40F3 L250 KIT | 1 |
| 2 | 4184784 | CONTROL PANEL HMI SC KIT | 1 |
| 2 | 4185259 | ASSEMBLY DISPLAY SC PKG VP. | 1 |
| 3 | 4185257 | ASSEMBLY CPU SCe Booster VP. | 1 |
| 4 | 2051217 | AUTOM.CIRCUIT BREAKER S203 B16 TO7,5kW | 1 |
| 5 | 2046288 | CIRCUIT BREAKER S201 B16 | 1 |
| 6 | 4194956 | PATCH CABLE RJ45 CAT6 1,0M BLUE SC-PANEL | 1 |

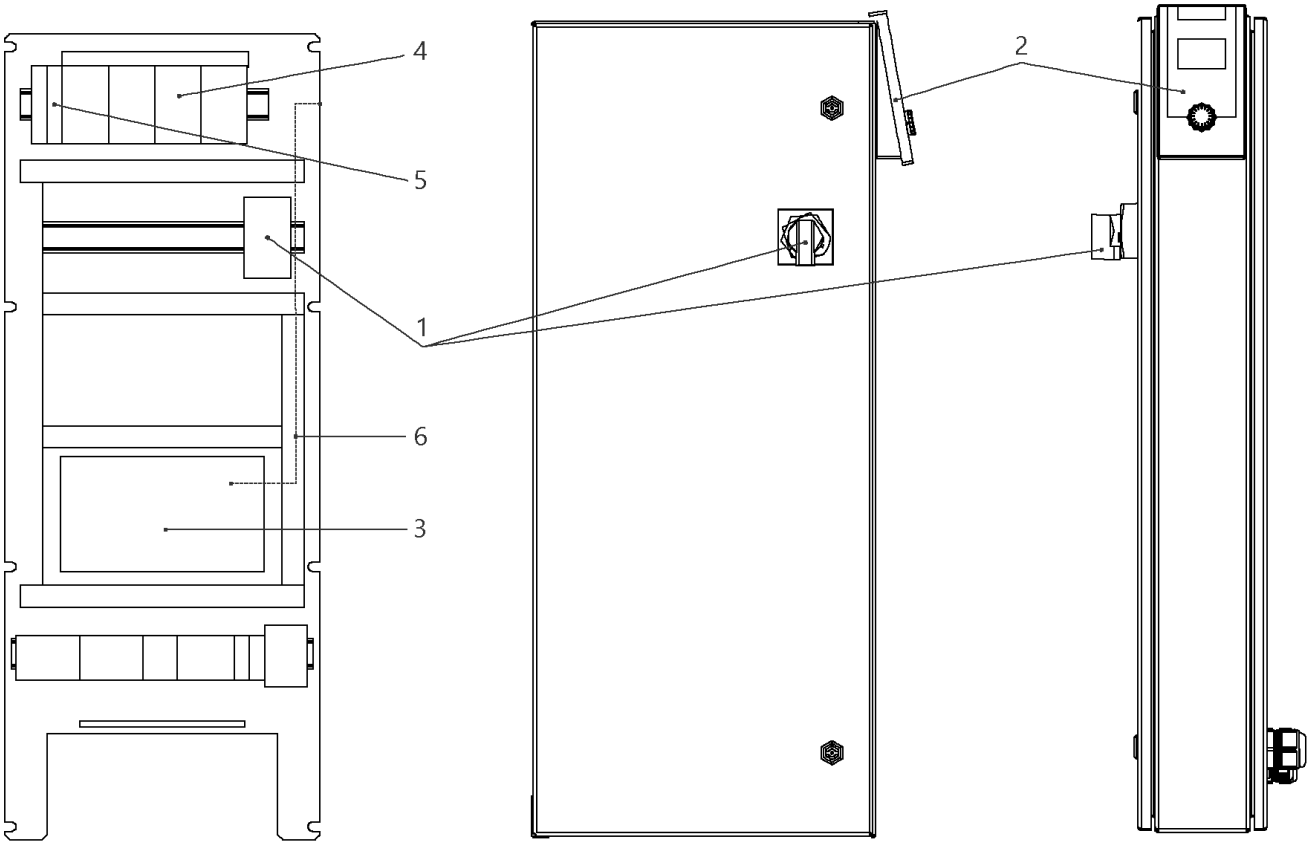
4
5
1
6
3
2

## W-CTRL-SCE-B-3x2,2-3,0KW-T4-FM-ND1

| Item | Article no. | Description | Quantity |
|---|---|---|---|
| 1 | 2104470 | MAIN SWITCH OT40F3 L250 KIT | 1 |
| 2 | 4184784 | CONTROL PANEL HMI SC KIT | 1 |
| 2 | 4185259 | ASSEMBLY DISPLAY SC PKG VP. | 1 |
| 3 | 4185257 | ASSEMBLY CPU SCe Booster VP. | 1 |
| 4 | 2051217 | AUTOM.CIRCUIT BREAKER S203 B16 TO7,5kW | 1 |
| 5 | 2046288 | CIRCUIT BREAKER S201 B16 | 1 |
| 6 | 4197081 | CABLE RJ45 CAT6 0,5M RED SC-PANEL VP. | 1 |

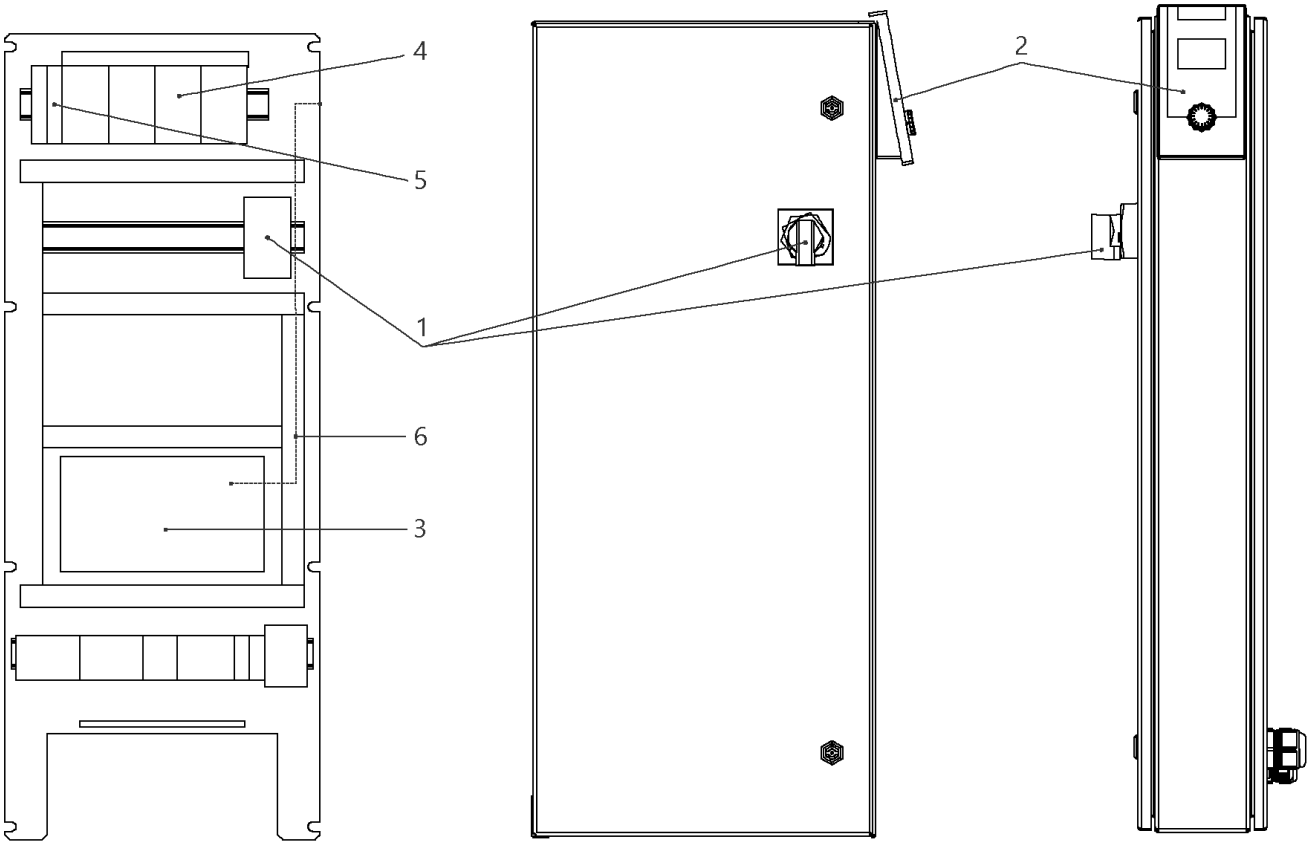
4
5
1
6
3
2

## W-CTRL-SCE-B-3x10A-T34-FM-ND1-AVC-PKG (2541914)

| Item | Article no. | Description | Quantity |
|---|---|---|---|
| 1 | 2104473 | MAIN SWITCH OT63F3 L105 KIT | 1 |
| Note: TO / BIS / JUSQU'AU 30/06/2015 | | | |
| 1 | 2104470 | MAIN SWITCH OT40F3 L250 KIT | 1 |
| Note: FROM / AB / À PARTIR DU 01/07/2015 | | | |
| 2 | 4184784 | CONTROL PANEL HMI SC KIT | 1 |
| 2 | 4185259 | ASSEMBLY DISPLAY SC PKG VP. | 1 |
| Note: DISPLAY ALONE / PLATINE SEULE | | | |
| 3 | 4185257 | ASSEMBLY CPU SCe Booster VP. | 1 |
| 4 | 2119861 | AUTOMATIC CIRCUIT BREAKER S203 B13 3POL. | 1 |
| 5 | 2046288 | CIRCUIT BREAKER S201 B16 | 1 |
| 6 | 4197081 | CABLE RJ45 CAT6 0,5M RED SC-PANEL VP. | 1 |

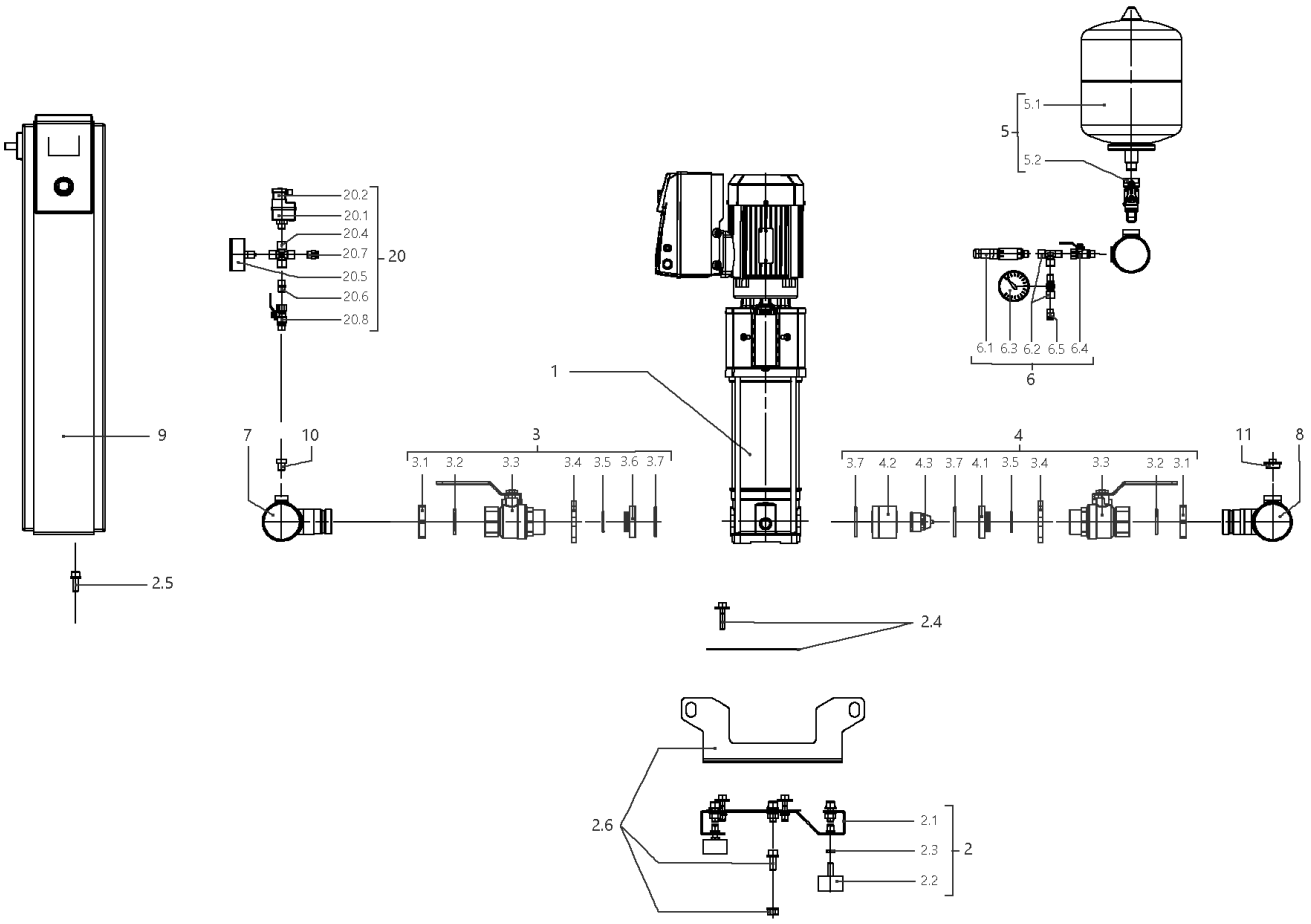
5.1
5
5.2
20.2
20.1
20.4
20.7
20
20.5
20.6
20.8
6.1 6.3 6.2 6.5 6.4
6
1
9
7
10
3
3.1 3.2 3.3 3.4 3.5 3.6 3.7
4
3.7 4.2 4.3 3.7 4.1 3.5 3.4 3.3 3.2 3.1
11
8
2.5
2.4
2.6
2.1
2.3
2
2.2

## SiBoost Smart 3HELIX VE608 (2537342)

| Item | Article no. | Description | Quantity |
|---|---|---|---|
| 1 | | HELIX VE608-1/16/E/S | 1 |
| Note: TO / BIS / JUSQU'AU 30/04/2016 | | | |
| 1 | 4201585 | HELIX VE608-1/16/E/S | 1 |
| Note: FROM / AB / À PARTIR DU 01/05/2016 | | | |
| 2 | 4200142 | BASE PLATE DE3 1150x420 KIT | 1 |
| 2.1 | | > BASEPLATE_3x4/6/10/16V_E300_BOX_150 | 1 |
| 2.2 | 2028654 | > VIBRATION DAMPER D.50X30 M10X28 | 1 |
| 2.3 | 2028281 | > NUT M10 DIN936 (ISO4035) 17H VZ | 1 |
| 2.4 | 4199875 | > HOLDER PUMP Siboost Helix V2/4 KIT | 1 |
| 2.5 | 4197084 | > HOLDER SWITCHBOX WILO Smart Control KIT | 1 |
| 2.6 | 4197117 | > LIFTING Siboost HELIX SC KIT | 1 |
| 3 | 4199876 | SUCTION SIDE Siboost Helix V2/4/6 KIT | 1 |
| 3.1 | 2032610 | > NUT G11/4 MS VP. | 1 |
| 3.2 | 2032611 | > O-RING ID.36,09X3,53N DIN3771 E7502 | 1 |
| 3.3 | 2507646 | > BALL VALVE G11/4"M-F-W.HANDLE 1/4-TURN | 1 |
| 3.4 | 2032613 | > SCREWED FLANGE G1 1/4" LK-75 ST37VZ | 1 |
| 3.5 | 2032614 | > O-RING ID.29,82X2,62N DIN3771 E7502 | 1 |
| 3.6 | 2032615 | > SPACER F.I/A KUH.DN32 CUZN | 1 |
| 3.7 | 2032616 | > O-RING ID.44X3,53N DIN3771 E7502 | 1 |
| 4 | 4199877 | DELIVERY SIDE Siboost Helix V2/4/6 KIT | 1 |
| 3.1 | 2032610 | > NUT G11/4 MS VP. | 1 |
| 3.2 | 2032611 | > O-RING ID.36,09X3,53N DIN3771 E7502 | 1 |
| 3.3 | 2507646 | > BALL VALVE G11/4"M-F-W.HANDLE 1/4-TURN | 1 |
| 3.4 | 2032613 | > SCREWED FLANGE G1 1/4" LK-75 ST37VZ | 1 |
| 3.5 | 2032614 | > O-RING ID.29,82X2,62N DIN3771 E7502 | 1 |
| 4.1 | 2058116 | > SPACER F.I/A KUH.DN32 CUZN | 1 |
| 3.7 | 2032616 | > O-RING ID.44X3,53N DIN3771 E7502 | 1 |
| 4.2 | 2058115 | > HOUSING RFV(RV-IN) DN32 SGS/DRS | 1 |
| 4.3 | 2027870 | > NON-RETURN-DEVICE INSERT DN32(MTR) | 1 |
| 5 | 2032642 | DIAPHREM TANK 8L/PN16 DIN4807/T5 KIT | 1 |
| 5.1 | 2045914 | > DIAPHREM TANK 8L TYP-DD 16BAR | 1 |
| 5.2 | 2027853 | > FLOW FITTING G3/4 FOR DIAPHRAGM VES. | 1 |
| 6 | 4197076 | PRESSURE SENSOR/ GAUGE 0-16BAR KIT | 1 |
| 6.1 | 2085909 | > PRESS.SENSOR 1/4" 0-16BAR 4-20MA VP. | 1 |

| Item | Article no. | Description | Quantity |
|---|---|---|---|
| 6.2 | 4197077 | > T-PIECE 1/4" VP. | 1 |
| 6.3 | 2028692 | > PRESSURE GAUGE NG63-PN16-G1/4 | 1 |
| 6.4 | 2028291 | > BALL TAP R1/4" PN42 GIACOMINI R254DL | 1 |
| 6.5 | 2028691 | > BLOWGUN 1/4" MS 30BAR VP. | 1 |
| 7 | 4200140 | PIPE DE3 21/2''-3x11/4"+2x1/4x900 VP. | 1 |
| 8 | 4200141 | PIPE DE3 21/2''-3x11/4"+2x1/4+1x3/4x900 | 1 |
| 9 | | W-CTRL-SCE-B-3x4,0KW-T4-FM-ND2 | 1 |
| Note: TO / BIS / JUSQU'AU 18/05/2014 | | | |
| 9 | 2541906 | W-CTRL-SCE-B-3x13A-T34-FM-ND2-AVC-PKG | 1 |
| Note: FROM / AB / À PARTIR DU 19/05/2014 | | | |
| 10 | 4197079 | PLUG G1/4"x10 AISI304 KIT | 1 |
| 11 | 2032654 | PLUG R3/4" MS VIEGA 1751 | 1 |
| 20 | 2521150 | ASSEMBLY WMS. DE-EB. +VP | 1 |
| 20.1 | 2028652 | > PRESSURE SWITCH PS3-ASR 1/(1,3) VP. | 1 |
| 20.2 | 2130983 | > PLUG PS3-415 WITH KABEL 1,5M 2NO VP. | 1 |
| 20.4 | 2028290 | > CROSSPIECE R1/4" MS-NICKEL | 1 |
| 20.5 | 2028687 | > PRESSURE GAUGE NG63 R1/4" HI.0-6BAR | 1 |
| 20.6 | 2054268 | > DUAL NIPPLE G1/4" x G1/4" MS VP. | 1 |
| 20.7 | 2028691 | > BLOWGUN 1/4" MS 30BAR VP. | 1 |
| 20.8 | 2028291 | > BALL TAP R1/4" PN42 GIACOMINI R254DL | 1 |

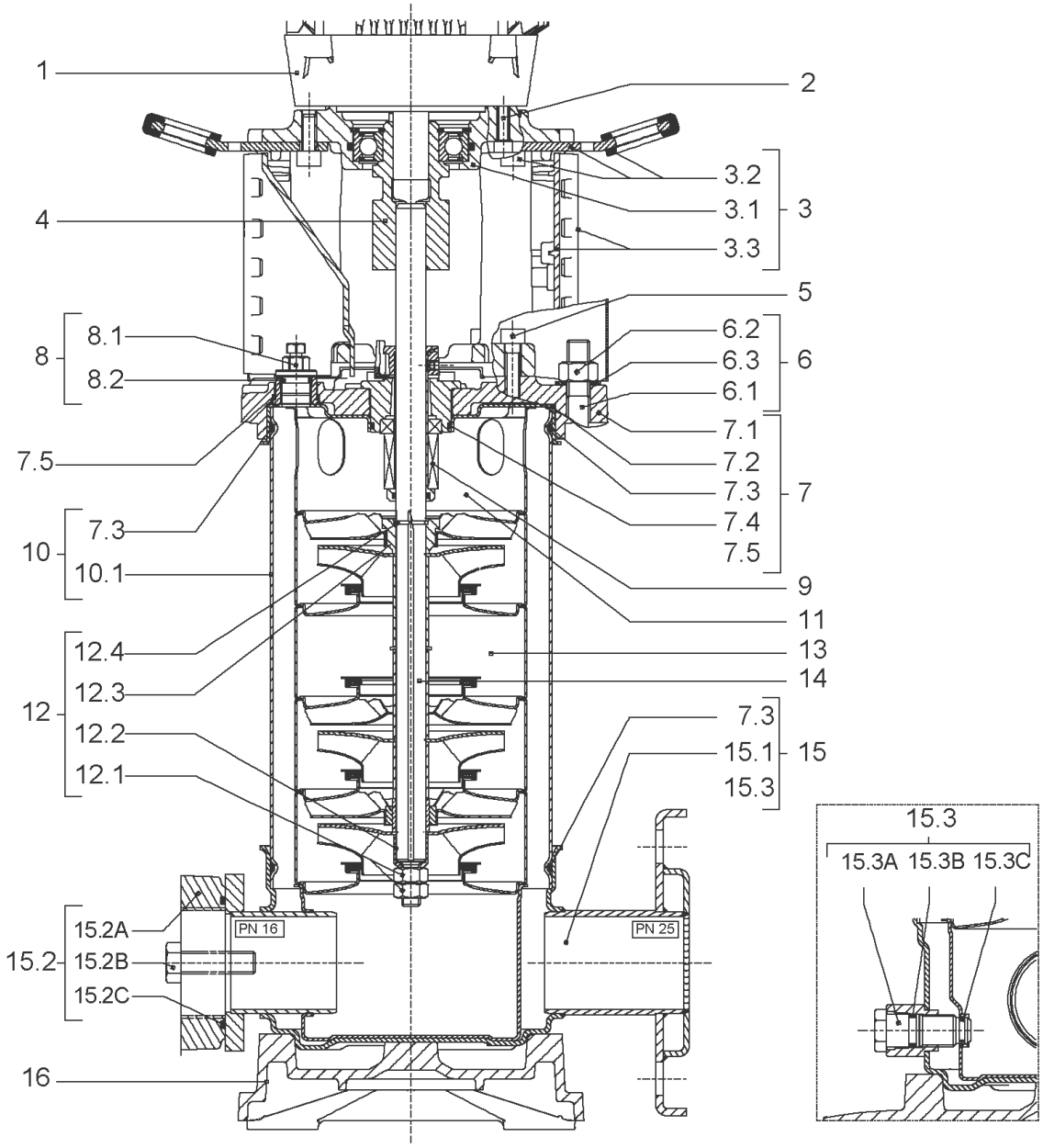
1
2
3.2
3.1
3
3.3
4
5
8.1
8
8.2
6.2
6.3
6
6.1
7.1
7.5
7.2
7.3
7
7.4
7.3
10
7.5
10.1
9
11
12.4
13
12.3
14
12
12.2
7.3
15.1
15
12.1
15.3
15.3
15.3A 15.3B 15.3C
15.2A
PN 16
PN 25
15.2
15.2B
15.2C
16

| Item | Article no. | Description | Quantity |
|---|---|---|---|
| 1 | | DRIVE HELIX-VE608IE2-WE KIT | 1 |
| Note: MOTOR BRAND WILO ELEC | | | |
| 1 | | DRIVE HELIX-VE608-IE4-WE KIT | 1 |
| Note: MOTOR BRAND WILO ELEC | | | |
| 2 | 4206025 | SCREW M8X45 (4 PIECES) | 1 |
| 3 | 4172789 | LANTERN FT130 HELIX V10 KIT | 1 |
| 3.1 | | > M+5_6_LANTERN_ONE-PIECE_FT130_CATA | 1 |
| 3.2 | 2127604 | > EYELET CPL.FT HELIX(2 PIECES) | 1 |
| 3.3 | 4159692 | > COUPLING PROTECTOR FT HELIX KIT | 1 |
| 4 | 4159710 | COUPLING D.16XD.28 FT130 HELIX KIT | 1 |
| 5 | 4159707 | SCREW M8X30 (4 PIECES) | 1 |
| 6 | 2127555 | STUD BOLT M12X485 KIT | 1 |
| 7 | 4210143 | STATIONARY RING HOLDER HELIX 6" EPDM | 1 |
| 7.2 | 2127607 | > STATIONARY RING HOLDER 6" HELIX 1.4301 V | 1 |
| 7.3 | 4176513 | > O-RING FOR PUMP JACKET VP. | 1 |
| 7.4 | 2127603 | > O-RING ID.37,6x2,4 EPDM VP. | 1 |
| 7.5 | 2127602 | > O-RING ID.21,35x2 EPDM VP. | 1 |
| 8 | 4159686 | FILING/PURGING PLUG HELIX EPDM KIT | 1 |
| 9 | 4171327 | SEAL-KIT-HELIX6-10-16 O/E KIT | 1 |
| 10 | 2127578 | HOUSING PIPE D.152x360 1.4307 KIT | 1 |
| 7.3 | 4176513 | > O-RING FOR PUMP JACKET VP. | 1 |
| 10.1 | | > HOUSING-PIPE Ø152-M+1008/1606-304 | 1 |
| 11 | 4174087 | CENTERING STAGE-RETURN HELIX6 1.4301VP. | 1 |
| 12 | 4174086 | SHAFTS EQUIPMENT HELIX V6 MONOBLOC KIT | 1 |
| 12.1 | | > NUT-H-M10-A4.70 | 1 |
| 12.2 | | > SERRATED LOCK WASHER M+6M3-316L | 1 |
| 12.3 | | > IMPELLER STOP RING L33,2-304 | 1 |
| 12.4 | | > STOP-RUSH-1/2-D16xd2-M+316 | 1 |
| 13 | | HYDRAULIC HELIX V 608 1.4307 | 1 |
| 14 | 4177829 | SHAFT Ø16 X480 1.4301 VP. | 1 |
| 15 | 4217897 | PUMP HOUSING HELIX DN32 PN16 1.4301 KIT | 1 |
| 7.3 | 4176513 | > O-RING FOR PUMP JACKET VP. | 1 |
| 15.1 | | > BLASTING PPE HOUSING V-PN16-DN32-5"-304 | 1 |
| 15.2 | 4217891 | > COUNTER FLANGE-G1"1/4-PN16-GJL KIT | 1 |

| Item | Article no. | Description | Quantity |
|---|---|---|---|
| 15.3 | 4171321 | > PRIMING/DRAIN PLUG EPDM HELIX KIT | 1 |
| 16 | 4177964 | BASEPLATE HELIX V2/4/6 PN16 VP. | 1 |

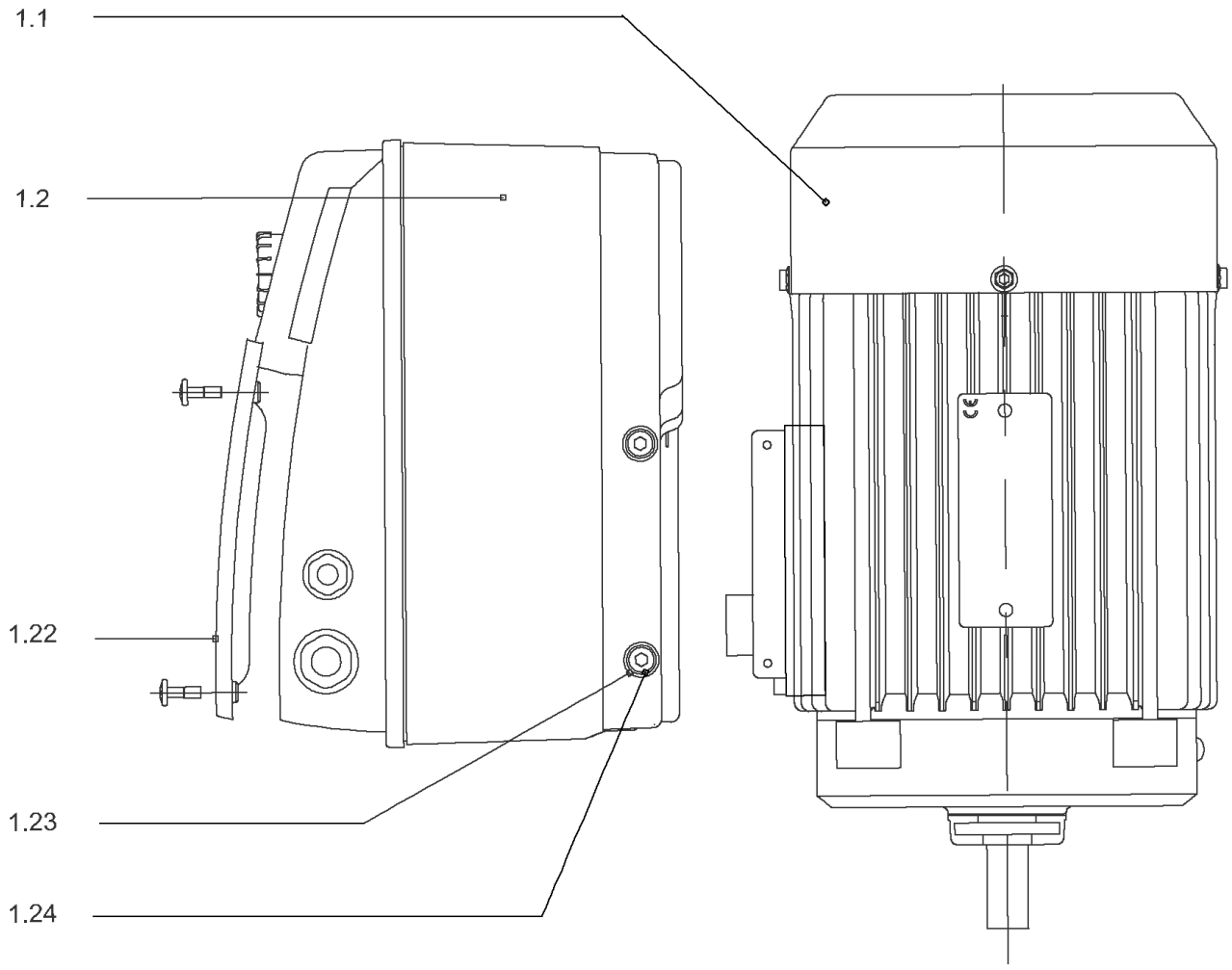
1.1
1.2
1.22
1.23
1.24

## DRIVE HELIX-VE608IE2-WE KIT

| Item | Article no. | Description | Quantity |
|---|---|---|---|
| 1.1 | | M3-T638P55V18H-100F13-SU-N28-WE-IE2 VP. | 1 |
| Note: no longer available/nicht mehrlieferbar/n'est plus disponible | | | |
| | | SPARE PARTS MOTOR:ON REQUEST | 1 |
| 1.2 | 4186331 | MODULE HELIX-VE608-IE2-WE KIT | 1 |
| 1.22 | 2054227 | > MODULE COVER/GASKET TL3/4 KIT | 1 |
| 1.23 | 4215716 | > SCREW M5X16 DIN912 8.8 A2A (4pieces) VP. | 1 |
| 1.24 | 2057978 | > RONDELLE A5,3 DIN6797 FST ZN (4 PIECES) | 1 |

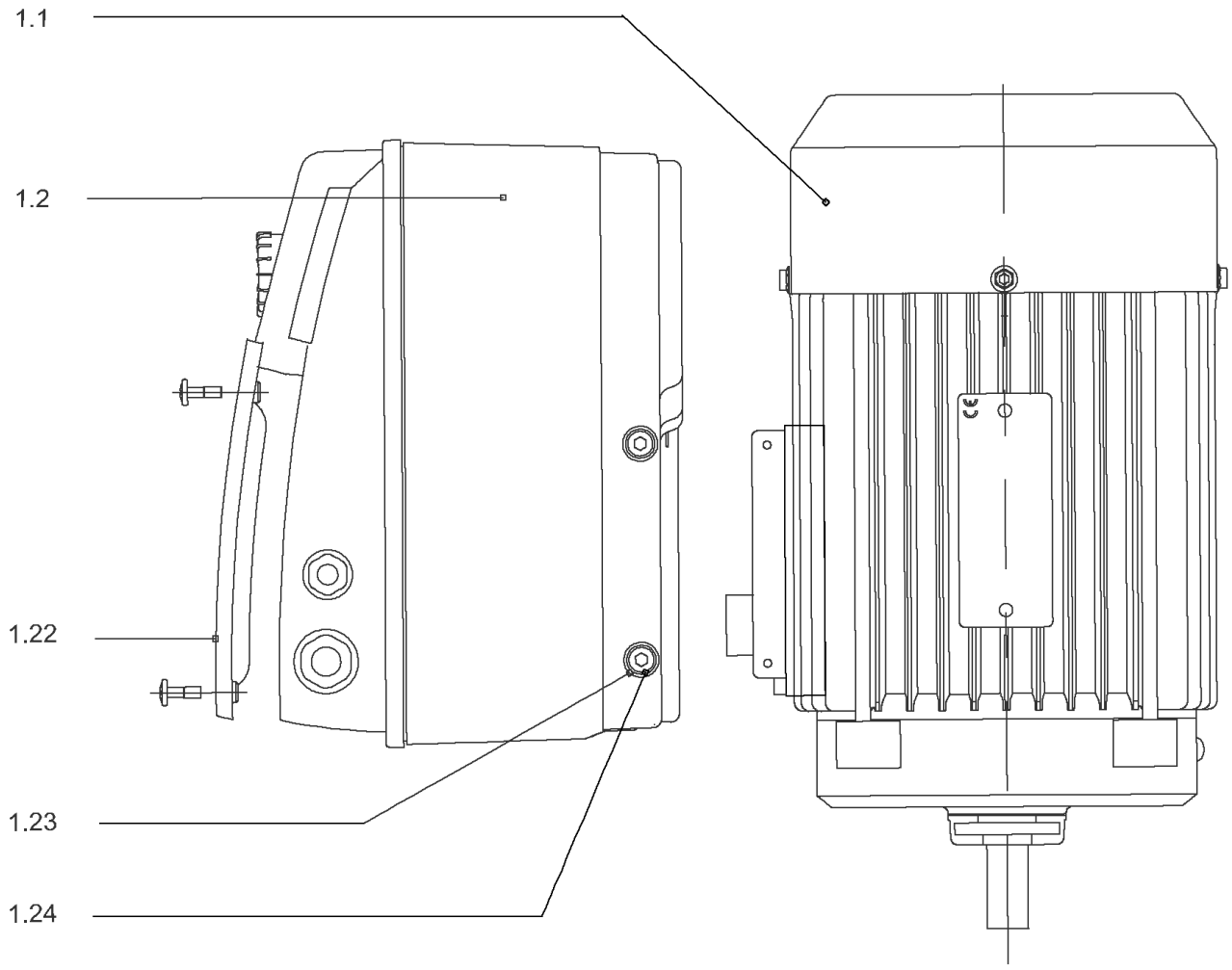
1.1
1.2
1.22
1.23
1.24

## DRIVE HELIX-VE608-IE4-WE KIT

| Item | Article no. | Description | Quantity |
|---|---|---|---|
| 1.1 | 4207922 | MOTOR 3/2/100 3~ 380V 60HZ IE4 WE VP. | 1 |
| | | SPARE PARTS MOTOR:ON REQUEST | 1 |
| 1.2 | 4209338 | MODULE HELIX-VE608-IE4-WE KIT | 1 |
| 1.22 | 2054227 | > MODULE COVER/GASKET TL3/4 KIT | 1 |
| 1.23 | 4215716 | > SCREW M5X16 DIN912 8.8 A2A (4pieces) VP. | 1 |
| 1.24 | 2057978 | > RONDELLE A5,3 DIN6797 FST ZN (4 PIECES) | 1 |

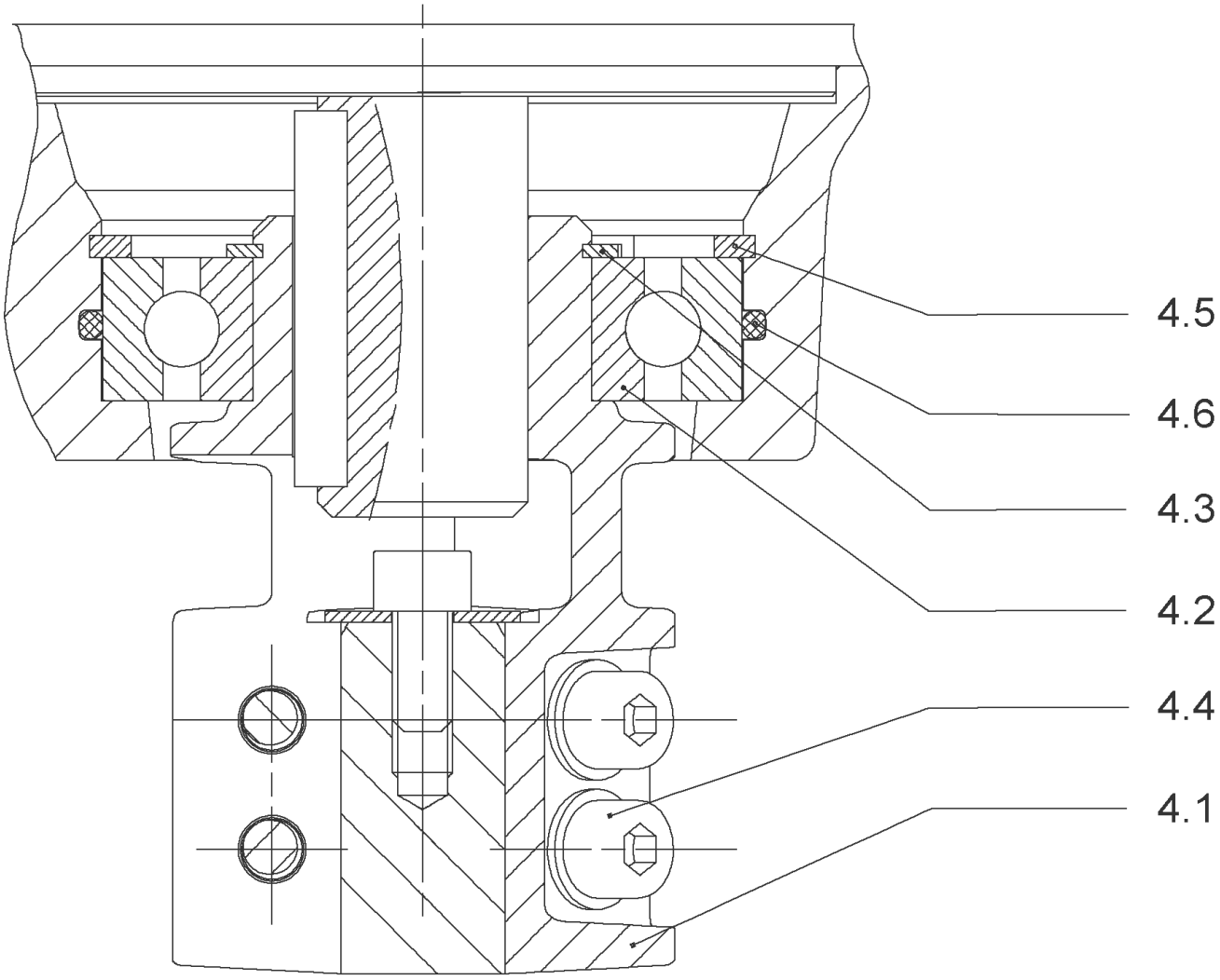
4.5
4.6
4.3
4.2
4.4
4.1

## COUPLING D.16XD.28 FT130 HELIX KIT (4159710)

| Item | Article no. | Description | Quantity |
|---|---|---|---|
| 4.1 | | COUPLING M+ Ø16XØ28 FT130 MACHINED | 1 |
| 4.2 | 2131022 | BALL BEARING 6209/ZZ-C3(HT)VP. | 1 |
| 4.3 | 4233930 | CIRCLIP-FOR-BORES-D45x1,75 VP. | 1 |
| 4.4 | 4157726 | SCREW KIT M8X30 (4 PIECES) | 1 |
| 4.5 | 4234252 | CIRCLIPS 85X3 VP. | 1 |
| 4.6 | 4234243 | O-RING 85X3 VP. | 1 |
| | | NOMEL CONTACT WASHER 8x16x1,4 STEEL ZC | 1 |

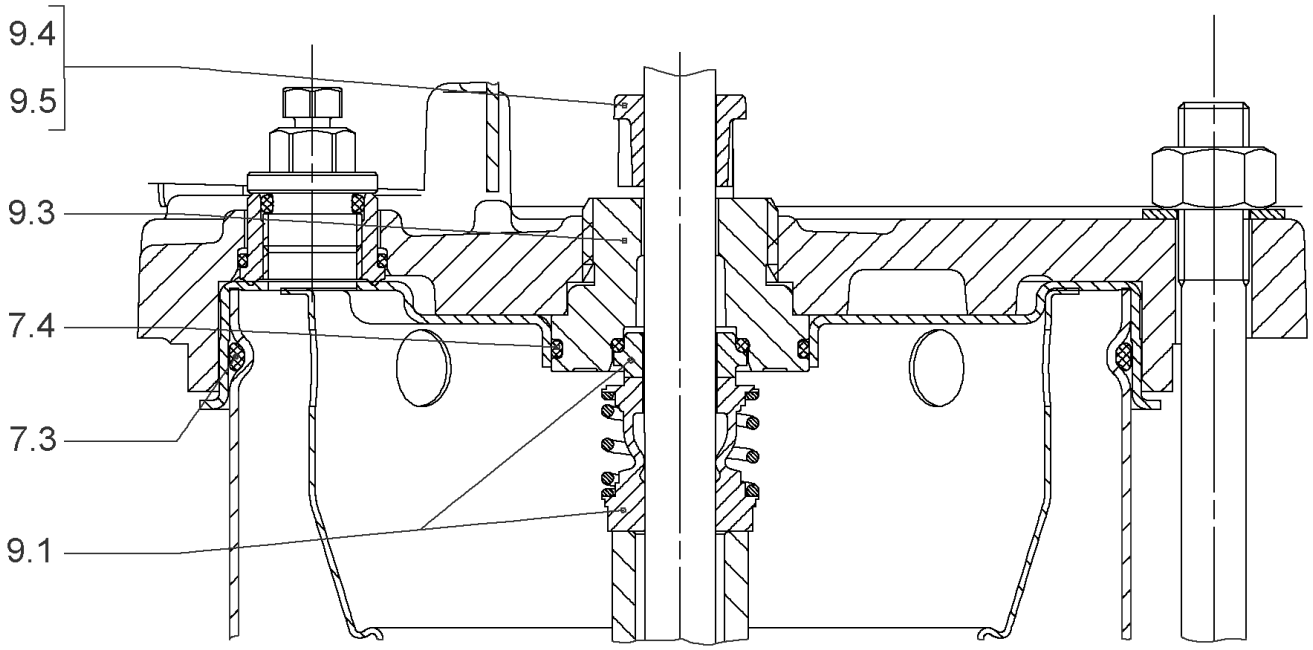
9.4
9.5
9.3
7.4
7.3
9.1

## SEAL-KIT-HELIX6-10-16 O/E KIT (4171327)

| Item | Article no. | Description | Quantity |
|---|---|---|---|
| 7.3 | 4176513 | O-RING FOR PUMP JACKET VP. | 1 |
| 7.4 | 2127603 | O-RING ID.37,6x2,4 EPDM VP. | 1 |
| 9.1 | 4177801 | MECH.SEAL HELIX6-10-16 O/E VP. | 1 |
| 9.3 | 4177798 | MACHINED RING HOLDER M+6" Ø16 304 VP. | 1 |
| 9.5 | 4177799 | MACHINED DRIVE RING Ø16 VP. | 1 |
| 9.4 | 4176520 | SCREW CH M5x5 A4-70 ( 3PIECES ) | 1 |

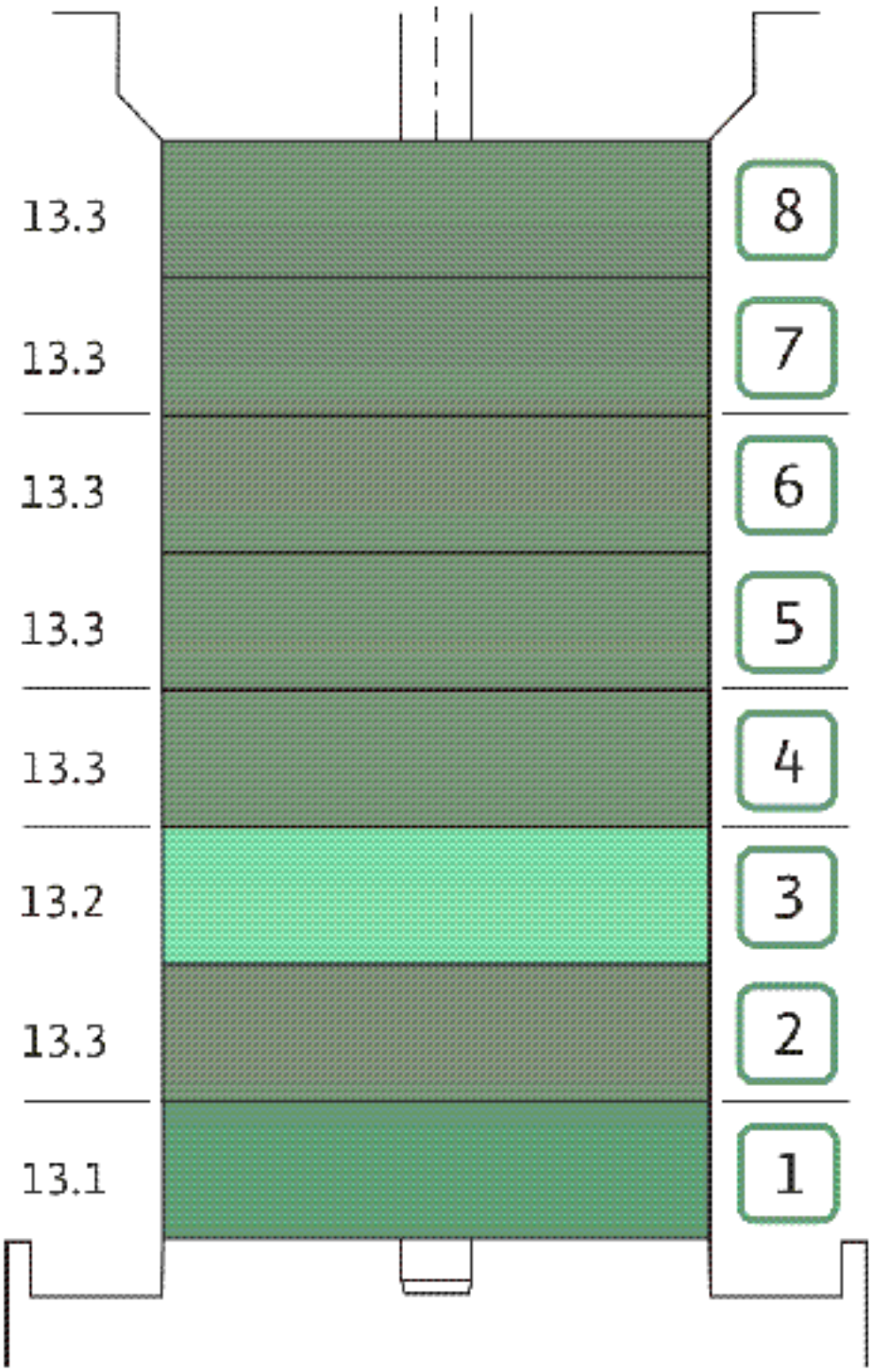
13.3
13.3
13.3
13.3
13.3
13.2
13.3
13.1
8
7
6
5
4
3
2
1

| Item | Article no. | Description | Quantity |
|---|---|---|---|
| 13.1 | 4174084 | STAGE HELIX 6 1.4301 KIT | 1 |
| | | > MACH.STG-CASING-WOGV-WNR-M+6-304 | 1 |
| | | > IMPELLER-M+6-304 | 1 |
| 13.2 | 4174089 | INTERMEDIATE STAGE HELIX 6 1.4301 KIT | 1 |
| | | > MACH.BEARING-STG-CASING-WNR-M+6-304 | 1 |
| | | > IMPELLER-M+6-304 | 1 |
| | | > SHAFT SLEEVE-SPACER-Ø19,35x18,465-304 | 1 |
| | | > SHAFT-SLEEVE-D16xD20x18-CW | 1 |
| 13.3 | 4174090 | INTERMEDIATE STAGE HELIX 6 1.4301 KIT | 1 |
| | | > MACH.STD-STG-CASING-WGV+NR-M+6-304 | 1 |
| | | > IMPELLER-M+6-304 | 1 |
| | | > IMPELLER SPACER Ø16,05X19,45-L36,465-304 | 1 |

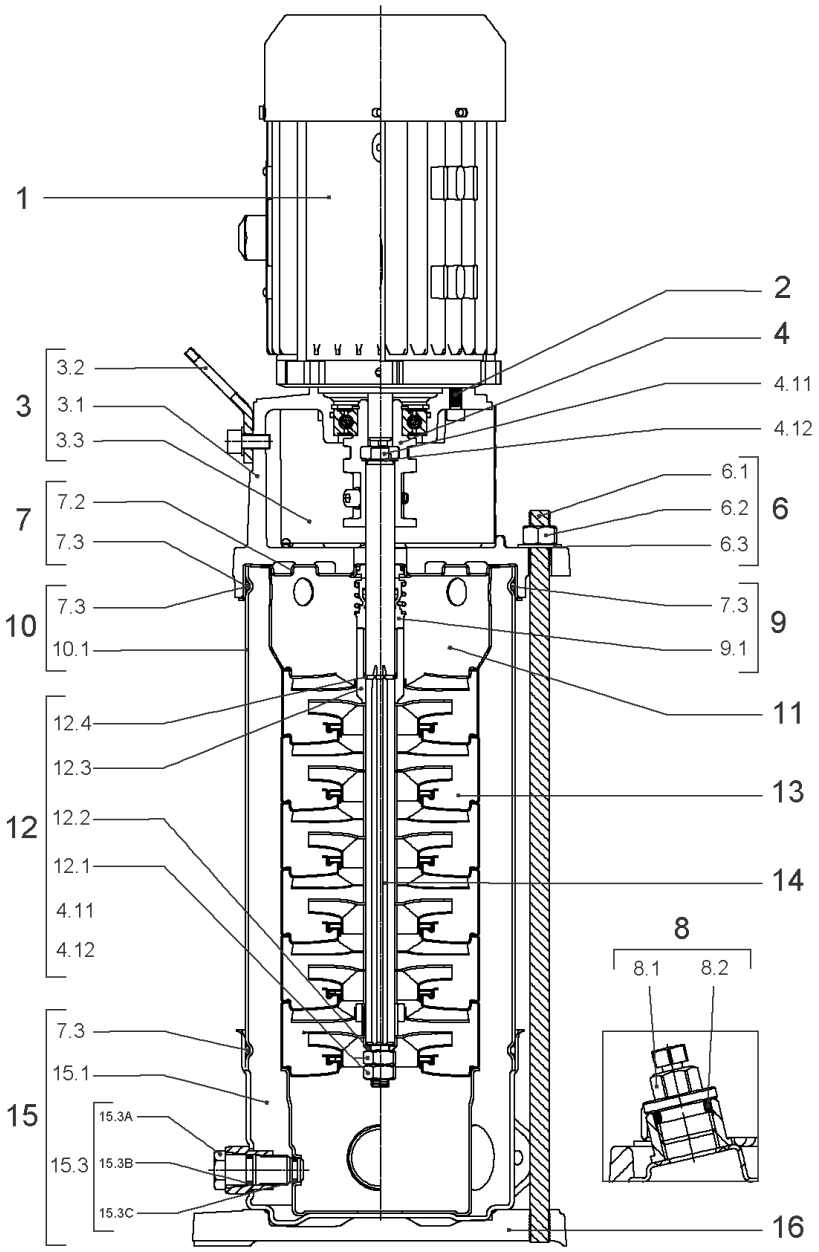
1
2
4
4.11
4.12
3
3.2
3.1
3.3
7
7.2
7.3
10
7.3
10.1
6
6.1
6.2
6.3
9
7.3
9.1
11
12
12.4
12.3
12.2
12.1
4.11
4.12
13
14
8
8.1
8.2
15
7.3
15.1
15.3
15.3A
15.3B
15.3C
16

## HELIX VE608-1/16/E/S (4201585)

| Item | Article no. | Description | Quantity |
|---|---|---|---|
| 1 | | DRIVE HELIX-VE608-IE4-WE KIT | 1 |
| Note: MOTOR BRAND WILO ELEC | | | |
| | | SPARE PARTS MOTOR:ON REQUEST | 1 |
| 2 | 4159707 | SCREW M8X30 (4 PIECES) | 1 |
| 3 | 4214473 | LANTERN FT130 HELIX KIT | 1 |
| 3.1 | | > LANT-MOT-VMI-ReDTC6"-FT130-MACHINED+CATA | 1 |
| 3.2 | 4184852 | > EYELET CPL.FT HELIX (2 PIECES) | 1 |
| 3.3 | 4213782 | > COUPLING PROTECTOR FT115/130 HELIX KIT | 1 |
| 4 | 4159710 | COUPLING D.16XD.28 FT130 HELIX KIT | 1 |
| 6 | 4177821 | STUD BOLT M12X485 KIT | 1 |
| 6.1 | | > TIE BOLT M12-485x18x30-1.4057 | 1 |
| 6.2 | 2094647 | > NUT M12 M12 ISO4032 VP. | 1 |
| 6.3 | 2123557 | > WASHER CS-12.4-24-1.6-NFE25 (4 PIECES) | 1 |
| 7 | 4214481 | STATIONARY RING HOLDER HELIX D27 ReDTC | 1 |
| 7.2 | 4214479 | > STATIONARY RING HOLDER HELIX D27 VP. | 1 |
| 7.3 | 4176513 | > O-RING FOR PUMP JACKET VP. | 1 |
| 8 | 4212724 | FILING/PURGING PLUG HELIX ReDTC KIT | 1 |
| 8.1 | | > FILLING PLUG MVI6"-304 | 1 |
| 8.2 | 4177800 | > O-RING EPDM PLUG HELIX VP. | 1 |
| 9 | 4214483 | MECH.SEAL HELIX6-10-16 O/E ReDTC KIT | 1 |
| 9.1 | 4177801 | > MECH.SEAL HELIX6-10-16 O/E VP. | 1 |
| 7.3 | 4176513 | > O-RING FOR PUMP JACKET VP. | 1 |
| 10 | 2127578 | HOUSING PIPE D.152x360 1.4307 KIT | 1 |
| 7.3 | 4176513 | > O-RING FOR PUMP JACKET VP. | 1 |
| 10.1 | | > HOUSING-PIPE Ø152-M+1008/1606-304 | 1 |
| 11 | 4174087 | CENTERING STAGE-RETURN HELIX6 1.4301VP. | 1 |
| 12 | 4214486 | SHAFT EQUIPMENT HELIX V6 ReDTC KIT | 1 |
| 12.1 | | > NUT-H-M10-A4.70 | 1 |
| 12.2 | | > SERRATED LOCK WASHER M+6M3-316L | 1 |
| 12.3 | | > 1/2-SNAP-RING-6/10M3-316L | 1 |
| 12.4 | | > STOP-RUSH-1/2-D16xd2-M+316 | 1 |
| 4.11 | | > SCREW CHC-M6X14-8.8-ISO4762-GEOMET500A | 1 |
| 4.12 | | > WASHER D.24 L6U ZINK | 1 |
| 13 | | HYDRAULIC HELIX V 608 1.4307 | 1 |

| Item | Article no. | Description | Quantity |
|---|---|---|---|
| 14 | 4214504 | SHAFT D.16X428 HELIX 1.4057 VP. | 1 |
| 15 | 4217897 | PUMP HOUSING HELIX DN32 PN16 1.4301 KIT | 1 |
| 7.3 | 4176513 | > O-RING FOR PUMP JACKET VP. | 1 |
| 15.1 | | > BLASTING PPE HOUSING V-PN16-DN32-5"-304 | 1 |
| 15.2 | 4217891 | > COUNTER FLANGE-G1"1/4-PN16-GJL KIT | 1 |
| 15.3 | 4171321 | > PRIMING/DRAIN PLUG EPDM HELIX KIT | 1 |
| 16 | 4177964 | BASEPLATE HELIX V2/4/6 PN16 VP. | 1 |

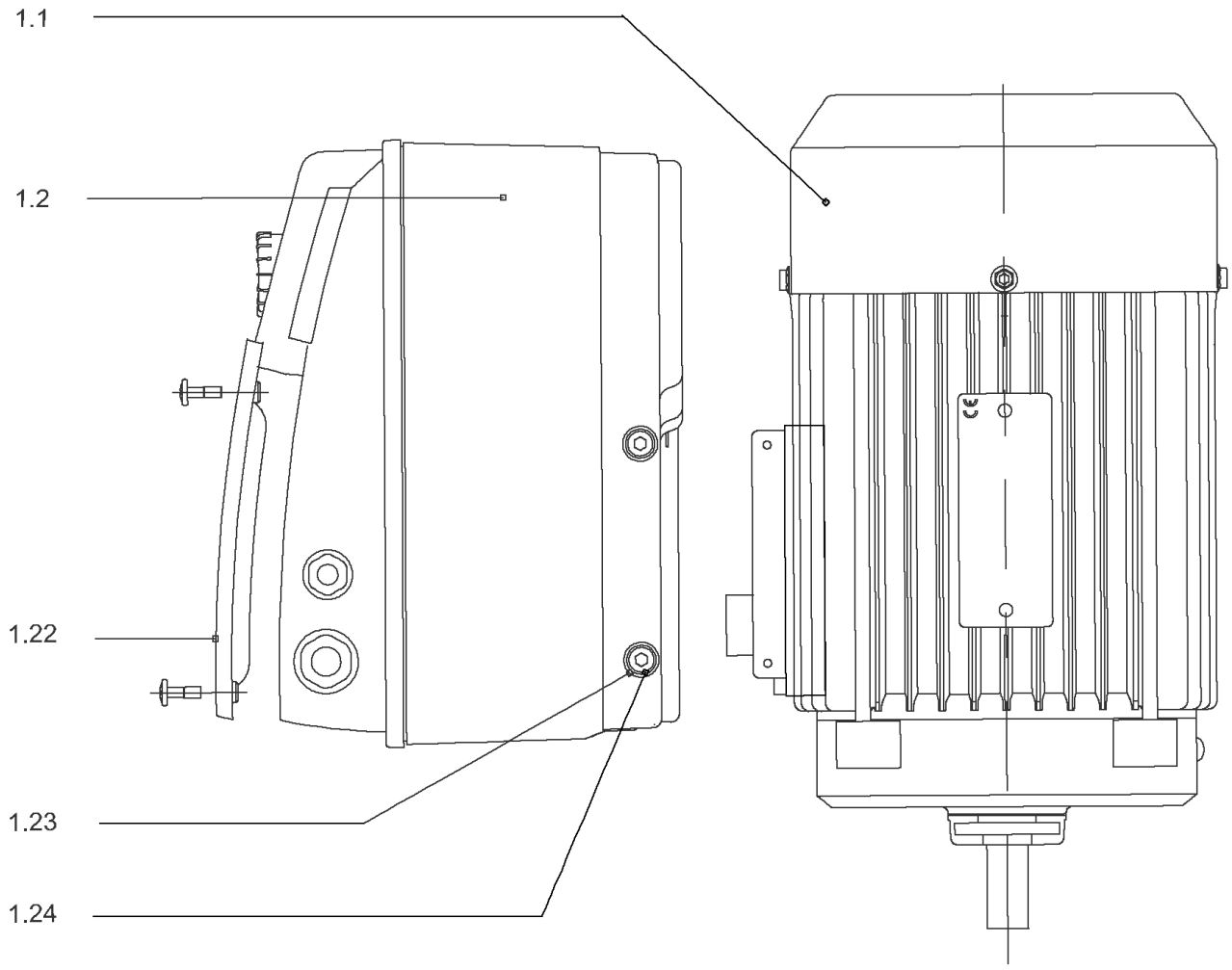
1.1
1.2
1.22
1.23
1.24

## DRIVE HELIX-VE608-IE4-WE KIT

| Item | Article no. | Description | Quantity |
|---|---|---|---|
| 1.1 | 4207922 | MOTOR 3/2/100 3~ 380V 60HZ IE4 WE VP. | 1 |
| | | SPARE PARTS MOTOR:ON REQUEST | 1 |
| 1.2 | 4209338 | MODULE HELIX-VE608-IE4-WE KIT | 1 |
| 1.22 | 2054227 | > MODULE COVER/GASKET TL3/4 KIT | 1 |
| 1.23 | 4215716 | > SCREW M5X16 DIN912 8.8 A2A (4pieces) VP. | 1 |
| 1.24 | 2057978 | > RONDELLE A5,3 DIN6797 FST ZN (4 PIECES) | 1 |

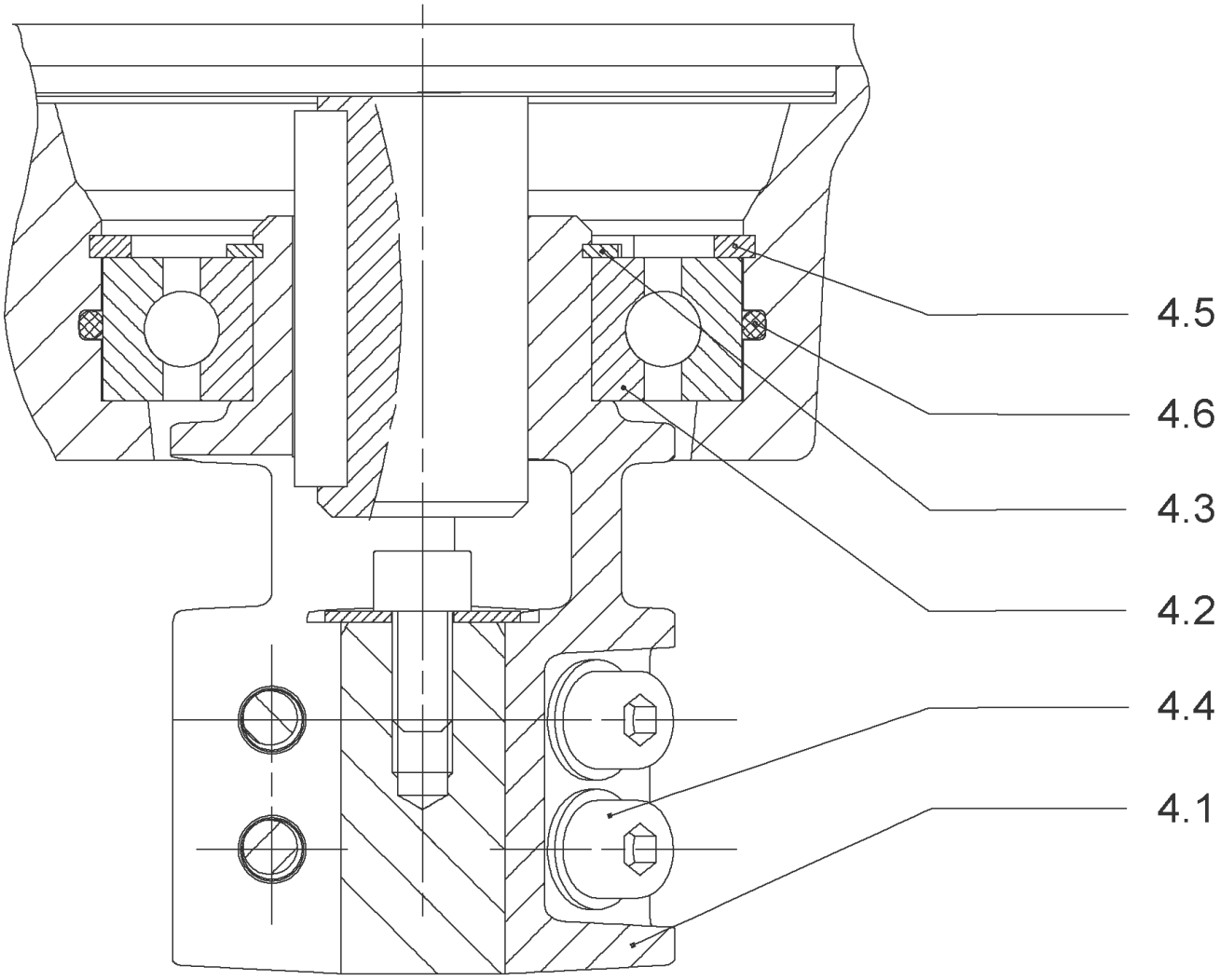
4.5
4.6
4.3
4.2
4.4
4.1

## COUPLING D.16XD.28 FT130 HELIX KIT (4159710)

| Item | Article no. | Description | Quantity |
|---|---|---|---|
| 4.1 | | COUPLING M+ Ø16XØ28 FT130 MACHINED | 1 |
| 4.2 | 2131022 | BALL BEARING 6209/ZZ-C3(HT)VP. | 1 |
| 4.3 | 4233930 | CIRCLIP-FOR-BORES-D45x1,75 VP. | 1 |
| 4.4 | 4157726 | SCREW KIT M8X30 (4 PIECES) | 1 |
| 4.5 | 4234252 | CIRCLIPS 85X3 VP. | 1 |
| 4.6 | 4234243 | O-RING 85X3 VP. | 1 |
| | | NOMEL CONTACT WASHER 8x16x1,4 STEEL ZC | 1 |

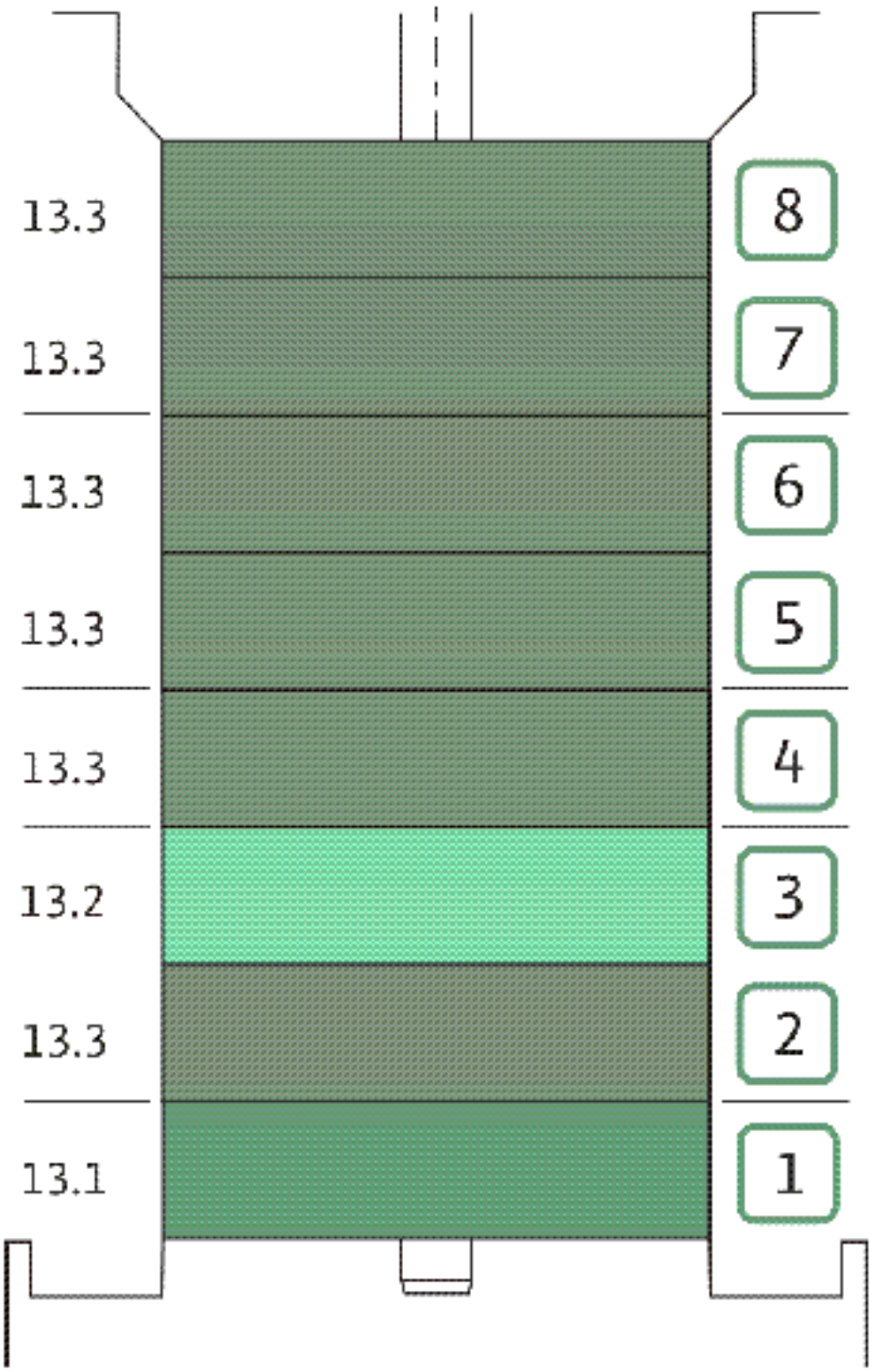
13.3
13.3
13.3
13.3
13.3
13.2
13.3
13.1
8
7
6
5
4
3
2
1

| Item | Article no. | Description | Quantity |
|---|---|---|---|
| 13.1 | 4174084 | STAGE HELIX 6 1.4301 KIT | 1 |
| | | > MACH.STG-CASING-WOGV-WNR-M+6-304 | 1 |
| | | > IMPELLER-M+6-304 | 1 |
| 13.2 | 4174089 | INTERMEDIATE STAGE HELIX 6 1.4301 KIT | 1 |
| | | > MACH.BEARING-STG-CASING-WNR-M+6-304 | 1 |
| | | > IMPELLER-M+6-304 | 1 |
| | | > SHAFT SLEEVE-SPACER-Ø19,35x18,465-304 | 1 |
| | | > SHAFT-SLEEVE-D16xD20x18-CW | 1 |
| 13.3 | 4174090 | INTERMEDIATE STAGE HELIX 6 1.4301 KIT | 1 |
| | | > MACH.STD-STG-CASING-WGV+NR-M+6-304 | 1 |
| | | > IMPELLER-M+6-304 | 1 |
| | | > IMPELLER SPACER Ø16,05X19,45-L36,465-304 | 1 |

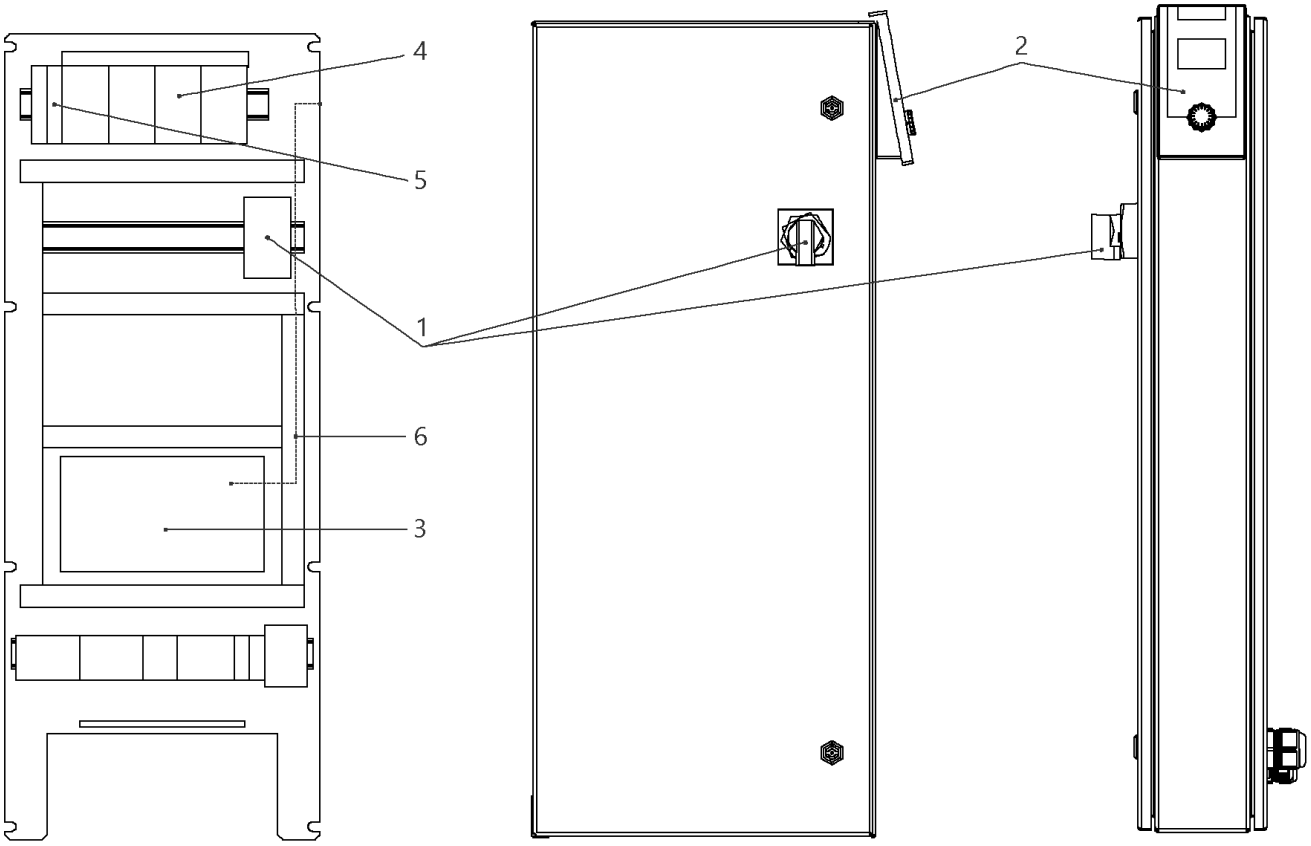
4
5
1
6
3
2

## W-CTRL-SCE-B-3x4,0KW-T4-FM-ND2

| Item | Article no. | Description | Quantity |
|---|---|---|---|
| 1 | 2104473 | MAIN SWITCH OT63F3 L105 KIT | 1 |
| 2 | 4184784 | CONTROL PANEL HMI SC KIT | 1 |
| 2 | 4185259 | ASSEMBLY DISPLAY SC PKG VP. | 1 |
| 3 | 4185257 | ASSEMBLY CPU SCe Booster VP. | 1 |
| 4 | 2051217 | AUTOM.CIRCUIT BREAKER S203 B16 TO7,5kW | 1 |
| 5 | 2046288 | CIRCUIT BREAKER S201 B16 | 1 |
| 6 | 4194956 | PATCH CABLE RJ45 CAT6 1,0M BLUE SC-PANEL | 1 |

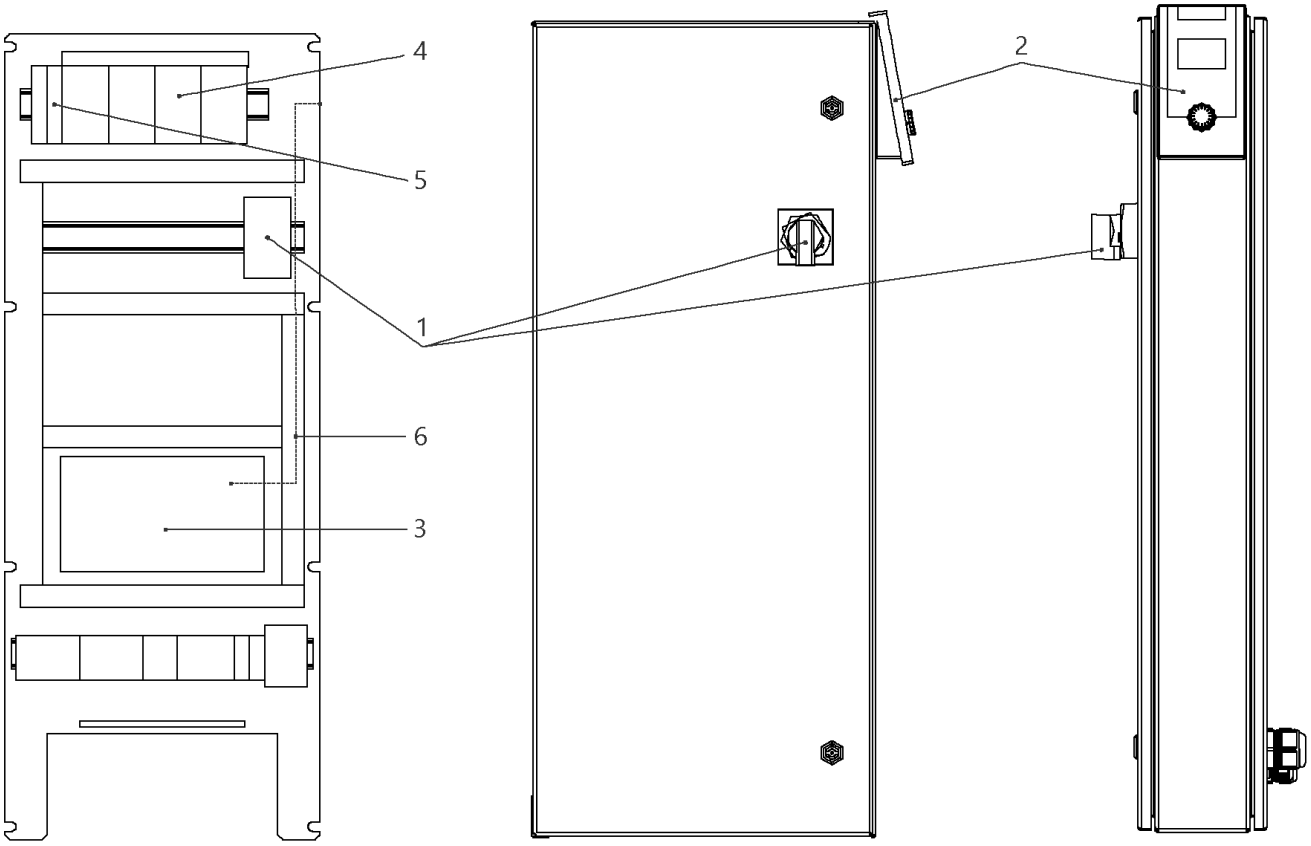
4
5
1
6
3
2

## W-CTRL-SCE-B-3x13A-T34-FM-ND2-AVC-PKG (2541906)

| Item | Article no. | Description | Quantity |
|---|---|---|---|
| 1 | 2104473 | MAIN SWITCH OT63F3 L105 KIT | 1 |
| 2 | 4184784 | CONTROL PANEL HMI SC KIT | 1 |
| 2 | 4185259 | ASSEMBLY DISPLAY SC PKG VP. | 1 |
| Note: DISPLAY ALONE / PLATINE SEULE | | | |
| 3 | 4185257 | ASSEMBLY CPU SCe Booster VP. | 1 |
| 4 | 2051217 | AUTOM.CIRCUIT BREAKER S203 B16 TO7,5kW | 1 |
| 5 | 2046288 | CIRCUIT BREAKER S201 B16 | 1 |
| 6 | 4194956 | PATCH CABLE RJ45 CAT6 1,0M BLUE SC-PANEL | 1 |

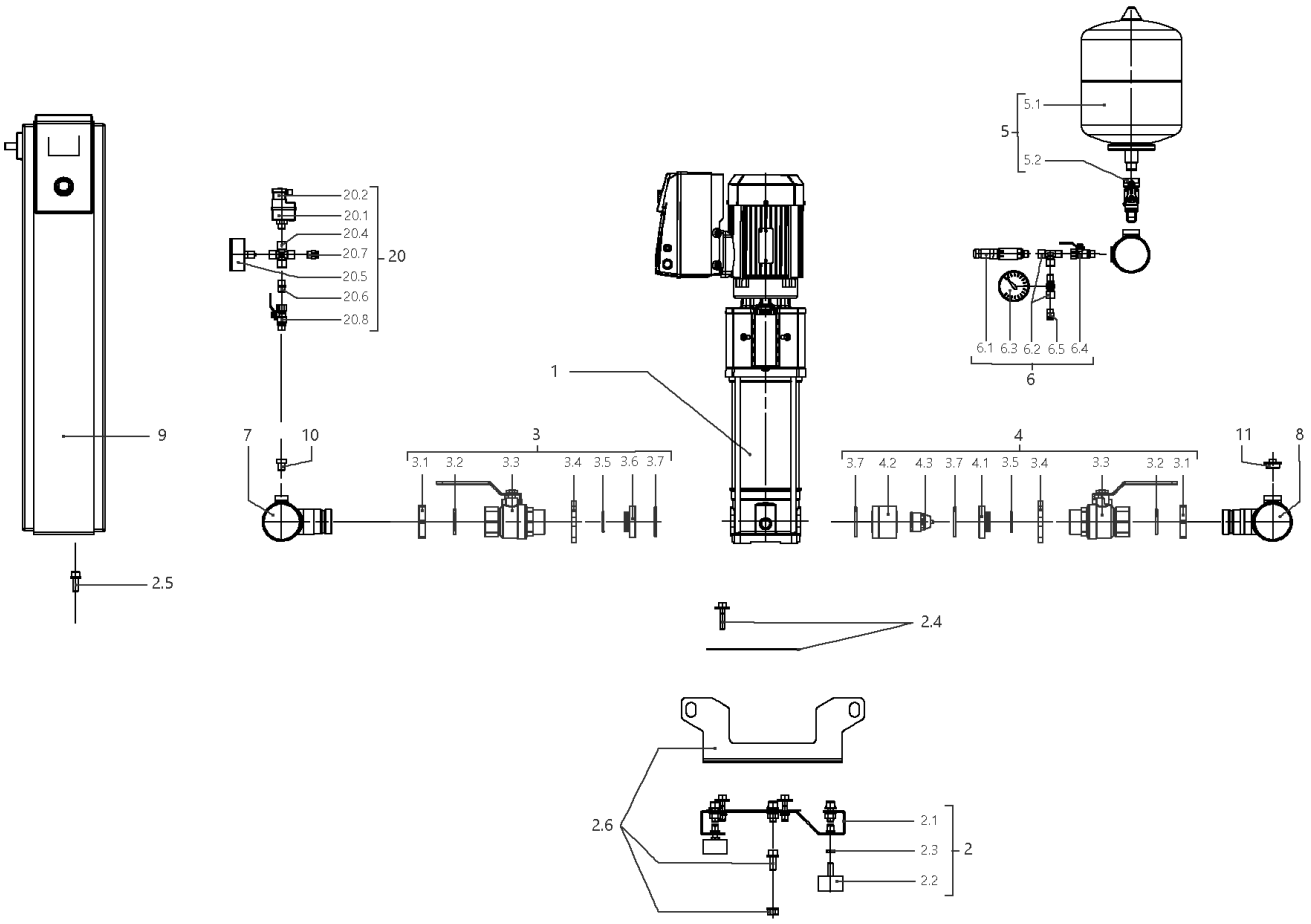
5.1
5
5.2
20.2
20.1
20.4
20.7
20
20.5
20.6
20.8
6.1 6.3 6.2 6.5 6.4
6
1
9
7
10
3
3.1 3.2 3.3 3.4 3.5 3.6 3.7
4
3.7 4.2 4.3 3.7 4.1 3.5 3.4 3.3 3.2 3.1
11
8
2.5
2.4
2.6
2.1
2.3
2
2.2

## SiBoost Smart 3HELIX VE611 (2536377)

| Item | Article no. | Description | Quantity |
|---|---|---|---|
| 1 | | HELIX VE611-1/16/E/S | 1 |
| Note: TO / BIS / JUSQU'AU 30/04/2016 | | | |
| 1 | 4201587 | HELIX VE611-1/16/E/S | 1 |
| Note: FROM / AB / À PARTIR DU 01/05/2016 | | | |
| 2 | 4200142 | BASE PLATE DE3 1150x420 KIT | 1 |
| 2.1 | | > BASEPLATE_3x4/6/10/16V_E300_BOX_150 | 1 |
| 2.2 | 2028654 | > VIBRATION DAMPER D.50X30 M10X28 | 1 |
| 2.3 | 2028281 | > NUT M10 DIN936 (ISO4035) 17H VZ | 1 |
| 2.4 | 4199875 | > HOLDER PUMP Siboost Helix V2/4 KIT | 1 |
| 2.5 | 4197084 | > HOLDER SWITCHBOX WILO Smart Control KIT | 1 |
| 2.6 | 4197117 | > LIFTING Siboost HELIX SC KIT | 1 |
| 3 | 4199876 | SUCTION SIDE Siboost Helix V2/4/6 KIT | 1 |
| 3.1 | 2032610 | > NUT G11/4 MS VP. | 1 |
| 3.2 | 2032611 | > O-RING ID.36,09X3,53N DIN3771 E7502 | 1 |
| 3.3 | 2507646 | > BALL VALVE G11/4"M-F-W.HANDLE 1/4-TURN | 1 |
| 3.4 | 2032613 | > SCREWED FLANGE G1 1/4" LK-75 ST37VZ | 1 |
| 3.5 | 2032614 | > O-RING ID.29,82X2,62N DIN3771 E7502 | 1 |
| 3.6 | 2032615 | > SPACER F.I/A KUH.DN32 CUZN | 1 |
| 3.7 | 2032616 | > O-RING ID.44X3,53N DIN3771 E7502 | 1 |
| 4 | 4199877 | DELIVERY SIDE Siboost Helix V2/4/6 KIT | 1 |
| 3.1 | 2032610 | > NUT G11/4 MS VP. | 1 |
| 3.2 | 2032611 | > O-RING ID.36,09X3,53N DIN3771 E7502 | 1 |
| 3.3 | 2507646 | > BALL VALVE G11/4"M-F-W.HANDLE 1/4-TURN | 1 |
| 3.4 | 2032613 | > SCREWED FLANGE G1 1/4" LK-75 ST37VZ | 1 |
| 3.5 | 2032614 | > O-RING ID.29,82X2,62N DIN3771 E7502 | 1 |
| 4.1 | 2058116 | > SPACER F.I/A KUH.DN32 CUZN | 1 |
| 3.7 | 2032616 | > O-RING ID.44X3,53N DIN3771 E7502 | 1 |
| 4.2 | 2058115 | > HOUSING RFV(RV-IN) DN32 SGS/DRS | 1 |
| 4.3 | 2027870 | > NON-RETURN-DEVICE INSERT DN32(MTR) | 1 |
| 5 | 2032642 | DIAPHREM TANK 8L/PN16 DIN4807/T5 KIT | 1 |
| 5.1 | 2045914 | > DIAPHREM TANK 8L TYP-DD 16BAR | 1 |
| 5.2 | 2027853 | > FLOW FITTING G3/4 FOR DIAPHRAGM VES. | 1 |
| 6 | 4197076 | PRESSURE SENSOR/ GAUGE 0-16BAR KIT | 1 |
| 6.1 | 2085909 | > PRESS.SENSOR 1/4" 0-16BAR 4-20MA VP. | 1 |

| Item | Article no. | Description | Quantity |
|---|---|---|---|
| 6.2 | 4197077 | > T-PIECE 1/4" VP. | 1 |
| 6.3 | 2028692 | > PRESSURE GAUGE NG63-PN16-G1/4 | 1 |
| 6.4 | 2028291 | > BALL TAP R1/4" PN42 GIACOMINI R254DL | 1 |
| 6.5 | 2028691 | > BLOWGUN 1/4" MS 30BAR VP. | 1 |
| 7 | 4200140 | PIPE DE3 21/2''-3x11/4"+2x1/4x900 VP. | 1 |
| 8 | 4200141 | PIPE DE3 21/2''-3x11/4"+2x1/4+1x3/4x900 | 1 |
| 9 | | W-CTRL-SCE-B-3x4,0KW-T4-FM-ND2 | 1 |
| Note: TO / BIS / JUSQU'AU 18/05/2014 | | | |
| 9 | 2541906 | W-CTRL-SCE-B-3x13A-T34-FM-ND2-AVC-PKG | 1 |
| Note: FROM / AB / À PARTIR DU 19/05/2014 | | | |
| 10 | 4197079 | PLUG G1/4"x10 AISI304 KIT | 1 |
| 11 | 2032654 | PLUG R3/4" MS VIEGA 1751 | 1 |
| 20 | 2521150 | ASSEMBLY WMS. DE-EB. +VP | 1 |
| 20.1 | 2028652 | > PRESSURE SWITCH PS3-ASR 1/(1,3) VP. | 1 |
| 20.2 | 2130983 | > PLUG PS3-415 WITH KABEL 1,5M 2NO VP. | 1 |
| 20.4 | 2028290 | > CROSSPIECE R1/4" MS-NICKEL | 1 |
| 20.5 | 2028687 | > PRESSURE GAUGE NG63 R1/4" HI.0-6BAR | 1 |
| 20.6 | 2054268 | > DUAL NIPPLE G1/4" x G1/4" MS VP. | 1 |
| 20.7 | 2028691 | > BLOWGUN 1/4" MS 30BAR VP. | 1 |
| 20.8 | 2028291 | > BALL TAP R1/4" PN42 GIACOMINI R254DL | 1 |

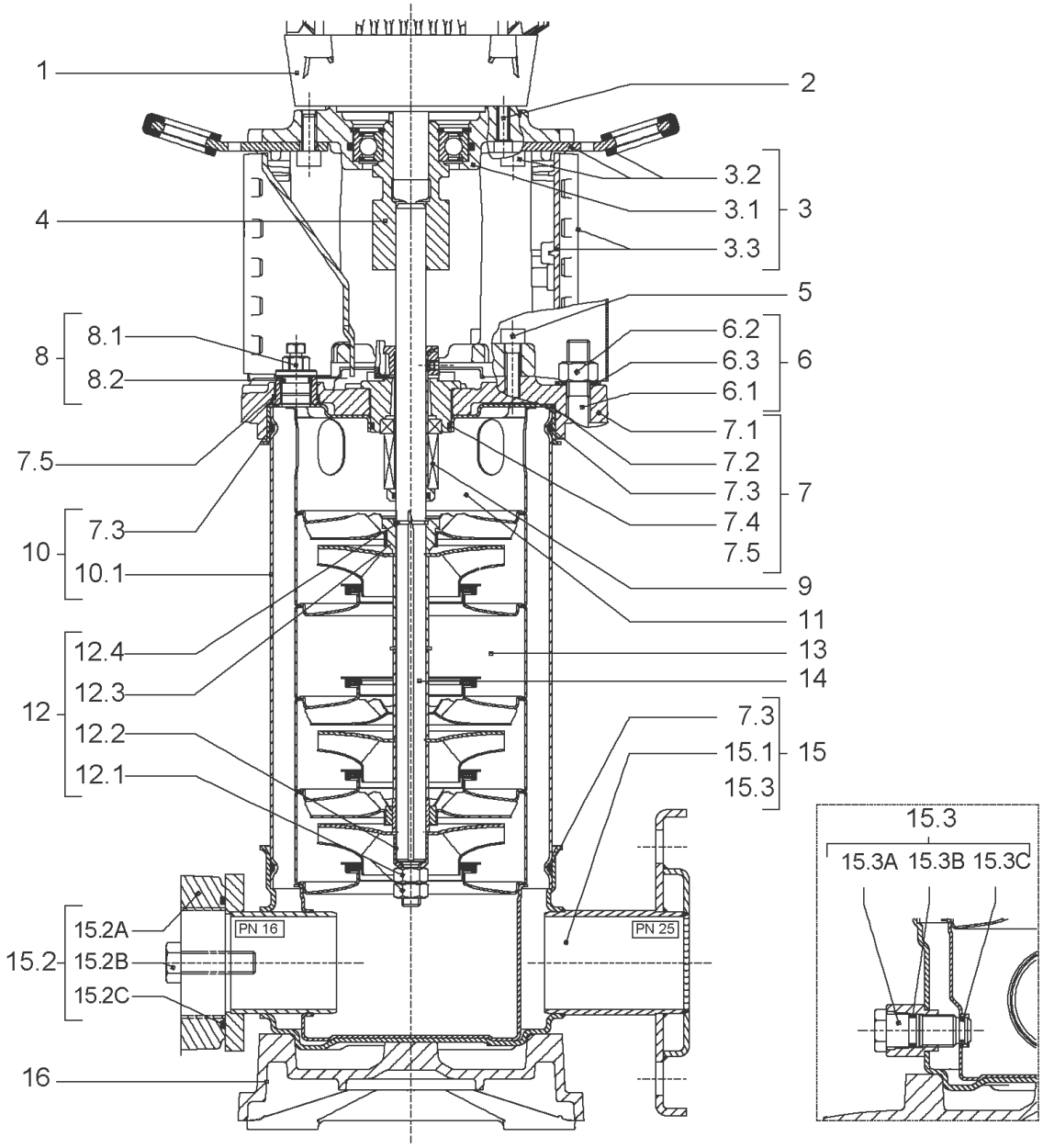
1
2
3.2
3.1
3
3.3
4
5
8.1
8
8.2
6.2
6.3
6
6.1
7.1
7.5
7.2
7.3
7
7.4
7.3
10
7.5
10.1
9
11
12.4
13
12.3
14
12
12.2
7.3
15.1
15
12.1
15.3
15.3
15.3A 15.3B 15.3C
15.2A
PN 16
PN 25
15.2
15.2B
15.2C
16

| Item | Article no. | Description | Quantity |
|---|---|---|---|
| 1 | | DRIVE HELIX-VE611-IE2-ATB KIT | 1 |
| Note: MOTOR BRAND ATB | | | |
| 1 | | DRIVE HELIX-VE611IE2-WE KIT | 1 |
| Note: MOTOR BRAND WILO ELEC | | | |
| 1 | | DRIVE HELIX-VE611-IE4-WE KIT | 1 |
| Note: MOTOR BRAND WILO ELEC | | | |
| 2 | 4206025 | SCREW M8X45 (4 PIECES) | 1 |
| 3 | 4172789 | LANTERN FT130 HELIX V10 KIT | 1 |
| 3.1 | | > M+5_6_LANTERN_ONE-PIECE_FT130_CATA | 1 |
| 3.2 | 2127604 | > EYELET CPL.FT HELIX(2 PIECES) | 1 |
| 3.3 | 4159692 | > COUPLING PROTECTOR FT HELIX KIT | 1 |
| 4 | 4159710 | COUPLING D.16XD.28 FT130 HELIX KIT | 1 |
| 5 | 4159707 | SCREW M8X30 (4 PIECES) | 1 |
| 6 | 4177842 | STUD BOLT M12X638KIT | 1 |
| 6.1 | | > TIE BOLT M12-638x18x30-1.4057 | 1 |
| 6.2 | 2094647 | > NUT M12 M12 ISO4032 VP. | 1 |
| 6.3 | 2123557 | > WASHER CS-12.4-24-1.6-NFE25 (4 PIECES) | 1 |
| 7 | 4210143 | STATIONARY RING HOLDER HELIX 6" EPDM | 1 |
| 7.2 | 2127607 | > STATIONARY RING HOLDER 6" HELIX 1.4301 V | 1 |
| 7.3 | 4176513 | > O-RING FOR PUMP JACKET VP. | 1 |
| 7.4 | 2127603 | > O-RING ID.37,6x2,4 EPDM VP. | 1 |
| 7.5 | 2127602 | > O-RING ID.21,35x2 EPDM VP. | 1 |
| 8 | 4159686 | FILING/PURGING PLUG HELIX EPDM KIT | 1 |
| 9 | 4171327 | SEAL-KIT-HELIX6-10-16 O/E KIT | 1 |
| 10 | 4177843 | HOUSING PIPES D.152X510 1.4307 KIT | 1 |
| 7.3 | 4176513 | > O-RING FOR PUMP JACKET VP. | 1 |
| 10.1 | | > HOUSING-PIPE Ø152-M+1012/1609-304 | 1 |
| 11 | 4174087 | CENTERING STAGE-RETURN HELIX6 1.4301VP. | 1 |
| 12 | 4174086 | SHAFTS EQUIPMENT HELIX V6 MONOBLOC KIT | 1 |
| 12.1 | | > NUT-H-M10-A4.70 | 1 |
| 12.2 | | > SERRATED LOCK WASHER M+6M3-316L | 1 |
| 12.3 | | > IMPELLER STOP RING L33,2-304 | 1 |
| 12.4 | | > STOP-RUSH-1/2-D16xd2-M+316 | 1 |
| 13 | | HYDRAULIC HELIX V 611 1.4307 | 1 |

| Item | Article no. | Description | Quantity |
|---|---|---|---|
| 14 | 4177844 | SHAFT D.16X630 1.4301 VP. | 1 |
| 15 | 4217897 | PUMP HOUSING HELIX DN32 PN16 1.4301 KIT | 1 |
| 7.3 | 4176513 | > O-RING FOR PUMP JACKET VP. | 1 |
| 15.1 | | > BLASTING PPE HOUSING V-PN16-DN32-5"-304 | 1 |
| 15.2 | 4217891 | > COUNTER FLANGE-G1"1/4-PN16-GJL KIT | 1 |
| 15.3 | 4171321 | > PRIMING/DRAIN PLUG EPDM HELIX KIT | 1 |
| 16 | 4177964 | BASEPLATE HELIX V2/4/6 PN16 VP. | 1 |

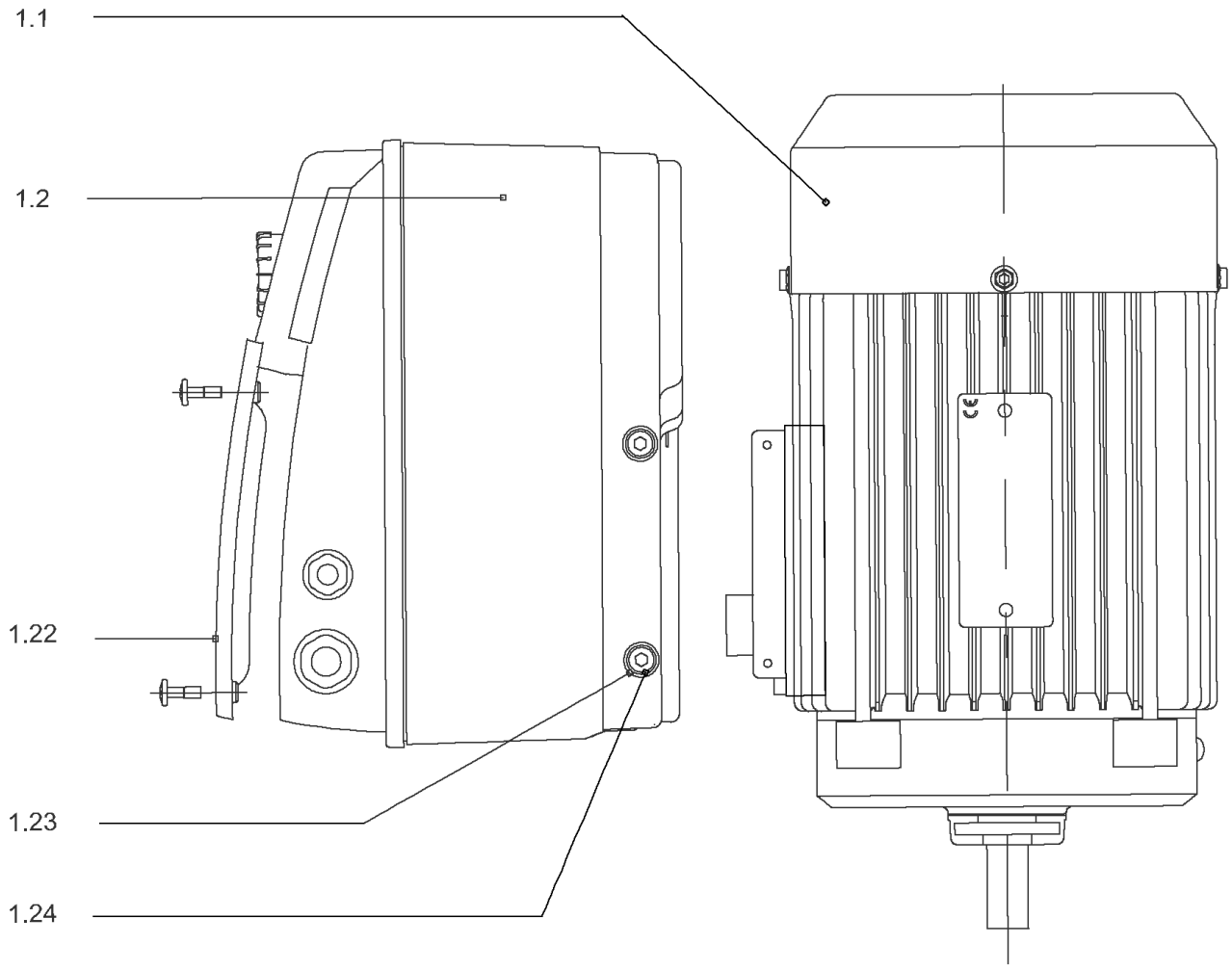
1.1
1.2
1.22
1.23
1.24

## DRIVE HELIX-VE611-IE2-ATB KIT

| Item | Article no. | Description | Quantity |
|---|---|---|---|
| 1.1 | | MOTOR 4/2/112 3~ 380V 60HZ IE2 ATB VP. | 1 |
| Note: no longer available/nicht mehrlieferbarn'est plus disponible | | | |
| | | SPARE PARTS MOTOR:ON REQUEST | 1 |
| 1.2 | 4186772 | MODULE HELIX-VE611-IE2-ATB KIT | 1 |
| 1.22 | 2054227 | > MODULE COVER/GASKET TL3/4 KIT | 1 |
| 1.23 | 4215716 | > SCREW M5X16 DIN912 8.8 A2A (4pieces) VP. | 1 |
| 1.24 | 2057978 | > RONDELLE A5,3 DIN6797 FST ZN (4 PIECES) | 1 |

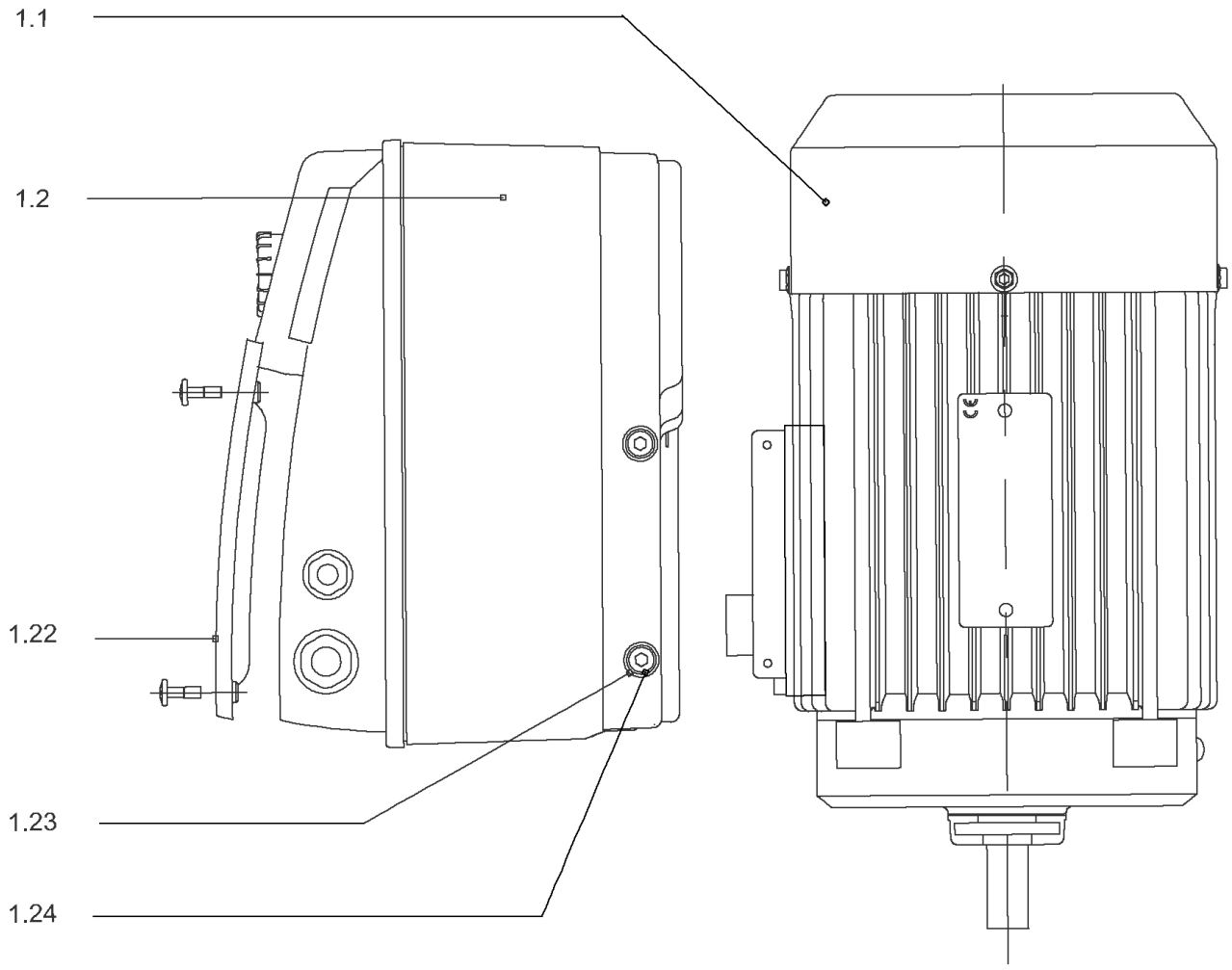
1.1
1.2
1.22
1.23
1.24

## DRIVE HELIX-VE611IE2-WE KIT

| Item | Article no. | Description | Quantity |
|---|---|---|---|
| 1.1 | 4188824 | MO.4/2/112 3~380V 60Hz IE2 WE VP. | 1 |
| | | SPARE PARTS MOTOR:ON REQUEST | 1 |
| 1.2 | 4186332 | MODULE HELIX-VE611-IE2-WE KIT | 1 |
| 1.22 | 2054227 | > MODULE COVER/GASKET TL3/4 KIT | 1 |
| 1.23 | 4215716 | > SCREW M5X16 DIN912 8.8 A2A (4pieces) VP. | 1 |
| 1.24 | 2057978 | > RONDELLE A5,3 DIN6797 FST ZN (4 PIECES) | 1 |

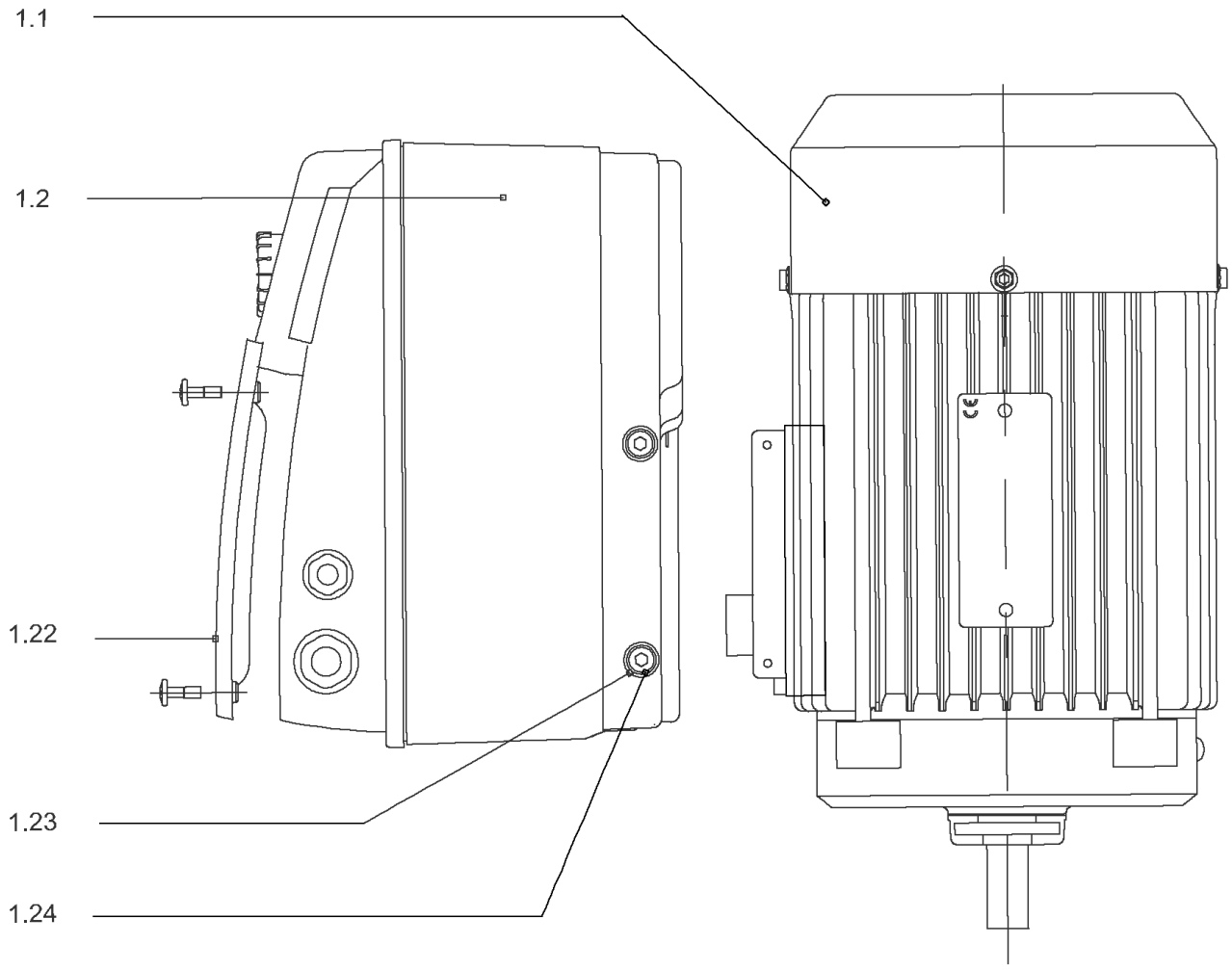
1.1
1.2
1.22
1.23
1.24

## DRIVE HELIX-VE611-IE4-WE KIT

| Item | Article no. | Description | Quantity |
|---|---|---|---|
| 1.1 | 4207924 | MOTOR 4/2/112 3~ 380V 60HZ IE4 WE VP. | 1 |
| | | SPARE PARTS MOTOR:ON REQUEST | 1 |
| 1.2 | 4209605 | MODULE HELIX-VE611-IE4-WE KIT | 1 |
| 1.22 | 2054227 | > MODULE COVER/GASKET TL3/4 KIT | 1 |
| 1.23 | 4215716 | > SCREW M5X16 DIN912 8.8 A2A (4pieces) VP. | 1 |
| 1.24 | 2057978 | > RONDELLE A5,3 DIN6797 FST ZN (4 PIECES) | 1 |

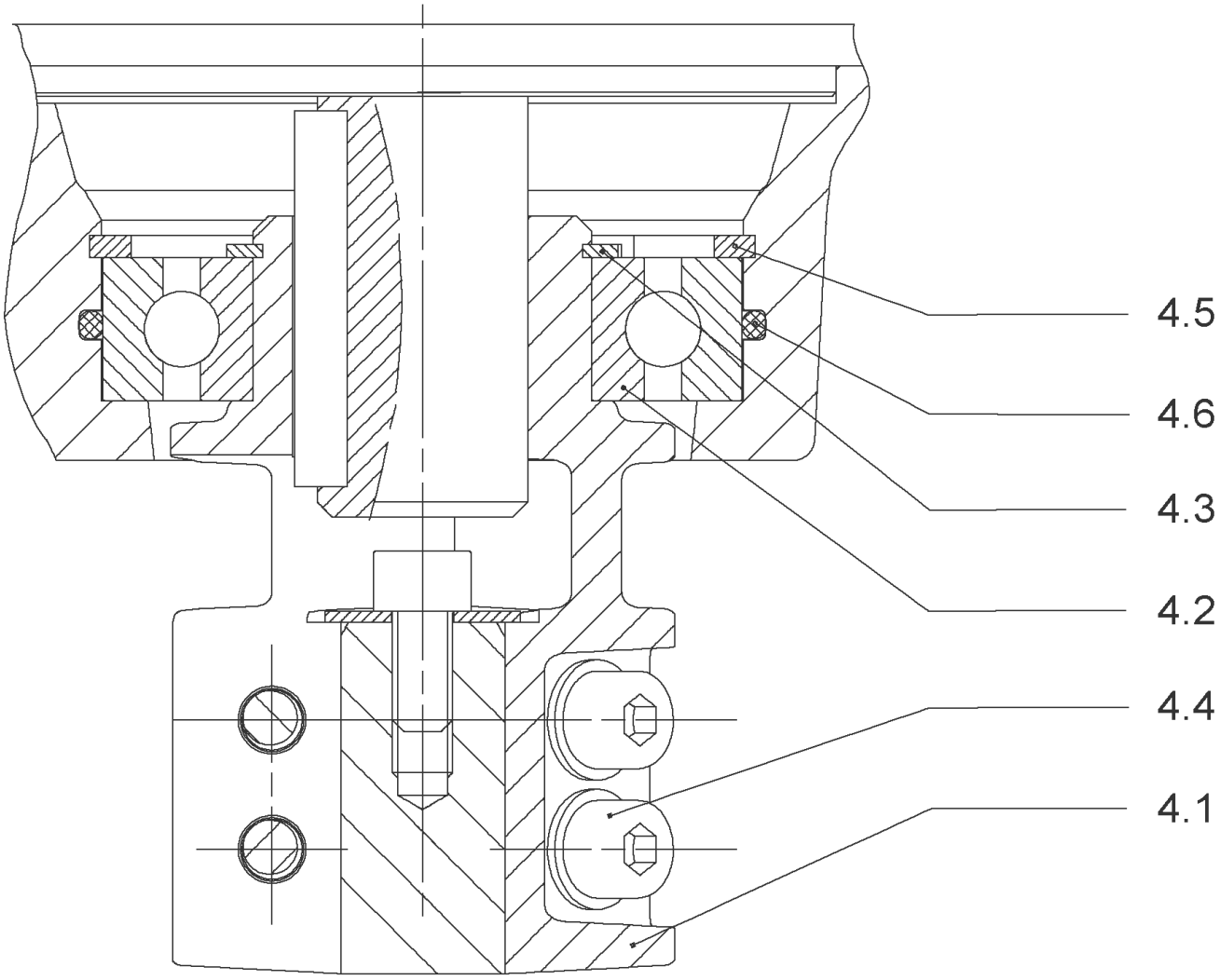
4.5
4.6
4.3
4.2
4.4
4.1

## COUPLING D.16XD.28 FT130 HELIX KIT (4159710)

| Item | Article no. | Description | Quantity |
|---|---|---|---|
| 4.1 | | COUPLING M+ Ø16XØ28 FT130 MACHINED | 1 |
| 4.2 | 2131022 | BALL BEARING 6209/ZZ-C3(HT)VP. | 1 |
| 4.3 | 4233930 | CIRCLIP-FOR-BORES-D45x1,75 VP. | 1 |
| 4.4 | 4157726 | SCREW KIT M8X30 (4 PIECES) | 1 |
| 4.5 | 4234252 | CIRCLIPS 85X3 VP. | 1 |
| 4.6 | 4234243 | O-RING 85X3 VP. | 1 |
| | | NOMEL CONTACT WASHER 8x16x1,4 STEEL ZC | 1 |

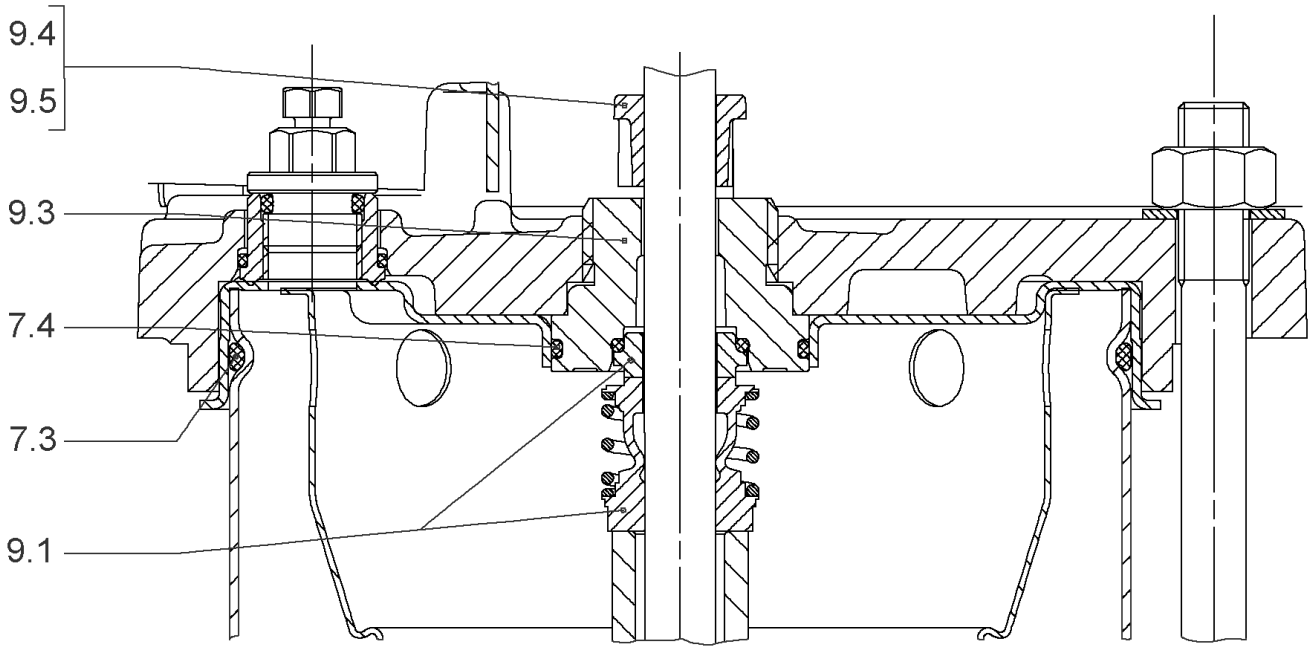
9.4
9.5
9.3
7.4
7.3
9.1

## SEAL-KIT-HELIX6-10-16 O/E KIT (4171327)

| Item | Article no. | Description | Quantity |
|---|---|---|---|
| 7.3 | 4176513 | O-RING FOR PUMP JACKET VP. | 1 |
| 7.4 | 2127603 | O-RING ID.37,6x2,4 EPDM VP. | 1 |
| 9.1 | 4177801 | MECH.SEAL HELIX6-10-16 O/E VP. | 1 |
| 9.3 | 4177798 | MACHINED RING HOLDER M+6" Ø16 304 VP. | 1 |
| 9.5 | 4177799 | MACHINED DRIVE RING Ø16 VP. | 1 |
| 9.4 | 4176520 | SCREW CH M5x5 A4-70 ( 3PIECES ) | 1 |

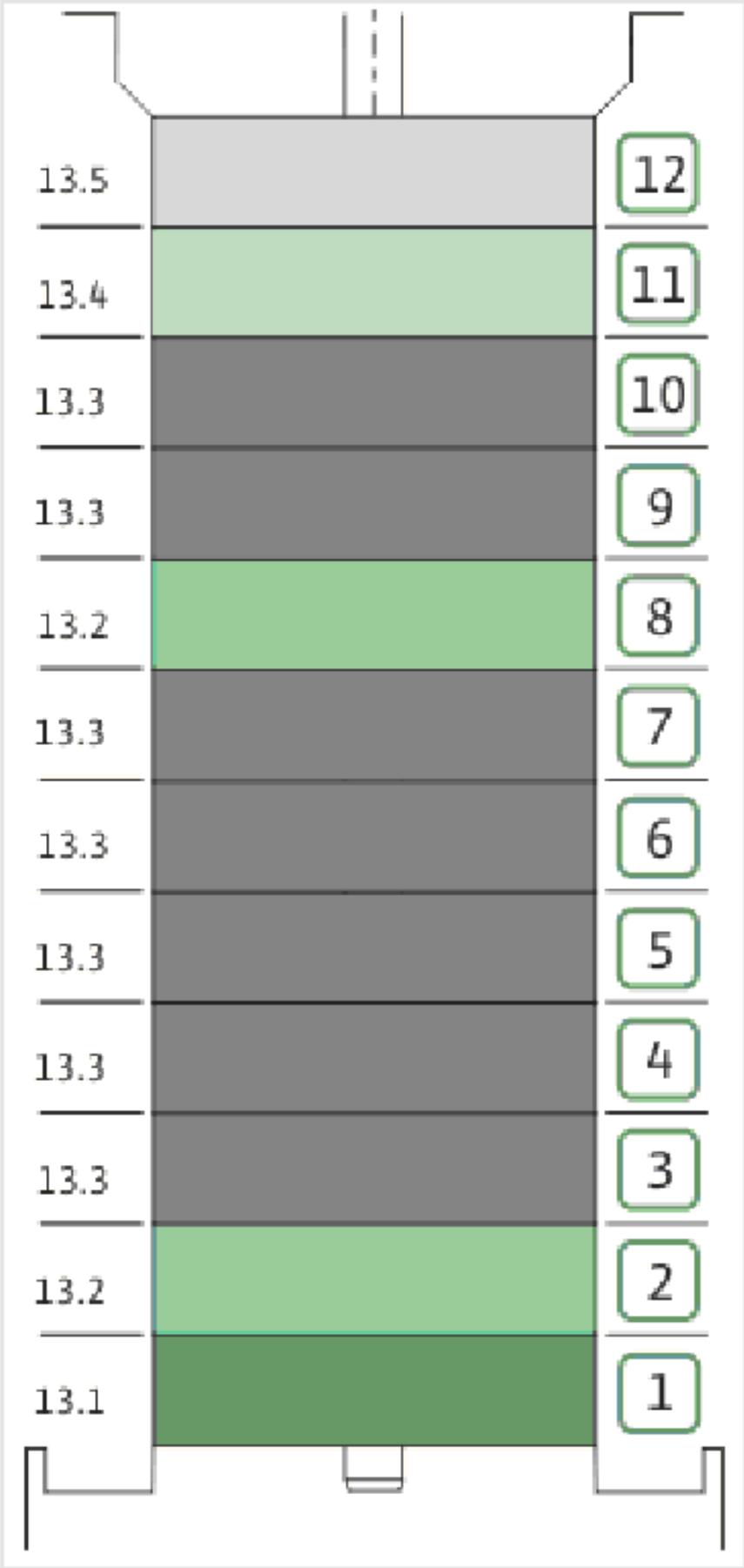
13.5
13.4
13.3
13.3
13.2
13.3
13.3
13.3
13.3
13.3
13.2
13.1
12
11
10
9
8
7
6
5
4
3
2
1

## HYDRAULIC HELIX V 611 1.4307

| Item | Article no. | Description | Quantity |
|---|---|---|---|
| 13.1 | 4174084 | STAGE HELIX 6 1.4301 KIT | 1 |
| | | > MACH.STG-CASING-WOGV-WNR-M+6-304 | 1 |
| | | > IMPELLER-M+6-304 | 1 |
| 13.2 | 4174089 | INTERMEDIATE STAGE HELIX 6 1.4301 KIT | 1 |
| | | > MACH.BEARING-STG-CASING-WNR-M+6-304 | 1 |
| | | > IMPELLER-M+6-304 | 1 |
| | | > SHAFT SLEEVE-SPACER-Ø19,35x18,465-304 | 1 |
| | | > SHAFT-SLEEVE-D16xD20x18-CW | 1 |
| 13.3 | 4174090 | INTERMEDIATE STAGE HELIX 6 1.4301 KIT | 1 |
| | | > MACH.STD-STG-CASING-WGV+NR-M+6-304 | 1 |
| | | > IMPELLER-M+6-304 | 1 |
| | | > IMPELLER SPACER Ø16,05X19,45-L36,465-304 | 1 |
| 13.4 | 4174092 | EMPTY STAGE HELIX6 1.4301KIT | 1 |
| | | > MACH.STD-STG-CASING-WGV+NR-M+6-304 | 1 |
| | | > FLAT WASHER-D16.1XD22X1.2-316L | 1 |
| | | > IMPELLER SPACER Ø16,05X19,45-L36,465-304 | 1 |
| 13.5 | 4174091 | STAGE HELIX 6 1.4301 KIT | 1 |
| | | > MACH.STG-CASING-WOGV-WNR-M+6-304 | 1 |
| | | > IMPELLER-M+6-304 | 1 |
| | | > IMPELLER SPACER Ø16,05X19,45-L36,465-304 | 1 |

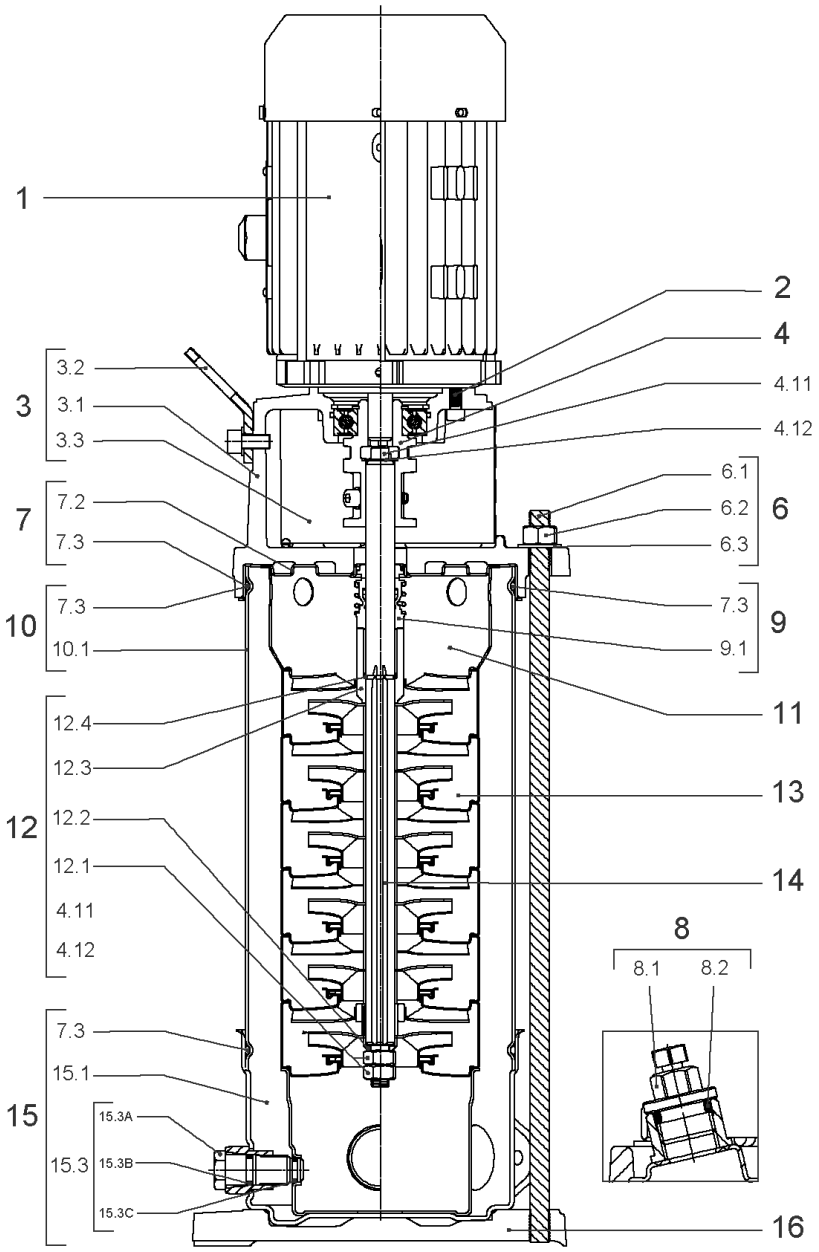
1
2
4
4.11
4.12
3
3.2
3.1
3.3
7
7.2
7.3
10
7.3
10.1
6
6.1
6.2
6.3
9
7.3
9.1
11
12
12.4
12.3
12.2
12.1
4.11
4.12
13
14
8
8.1
8.2
15
7.3
15.1
15.3
15.3A
15.3B
15.3C
16

## HELIX VE611-1/16/E/S (4201587)

| Item | Article no. | Description | Quantity |
|---|---|---|---|
| 1 | | DRIVE HELIX-VE611-IE4-WE KIT | 1 |
| Note: MOTOR BRAND WILO ELEC | | | |
| | | SPARE PARTS MOTOR:ON REQUEST | 1 |
| 2 | 4159707 | SCREW M8X30 (4 PIECES) | 1 |
| 3 | 4214473 | LANTERN FT130 HELIX KIT | 1 |
| 3.1 | | > LANT-MOT-VMI-ReDTC6"-FT130-MACHINED+CATA | 1 |
| 3.2 | 4184852 | > EYELET CPL.FT HELIX (2 PIECES) | 1 |
| 3.3 | 4213782 | > COUPLING PROTECTOR FT115/130 HELIX KIT | 1 |
| 4 | 4159710 | COUPLING D.16XD.28 FT130 HELIX KIT | 1 |
| 6 | 4177842 | STUD BOLT M12X638KIT | 1 |
| 6.1 | | > TIE BOLT M12-638x18x30-1.4057 | 1 |
| 6.2 | 2094647 | > NUT M12 M12 ISO4032 VP. | 1 |
| 6.3 | 2123557 | > WASHER CS-12.4-24-1.6-NFE25 (4 PIECES) | 1 |
| 7 | 4214481 | STATIONARY RING HOLDER HELIX D27 ReDTC | 1 |
| 7.2 | 4214479 | > STATIONARY RING HOLDER HELIX D27 VP. | 1 |
| 7.3 | 4176513 | > O-RING FOR PUMP JACKET VP. | 1 |
| 8 | 4212724 | FILING/PURGING PLUG HELIX ReDTC KIT | 1 |
| 8.1 | | > FILLING PLUG MVI6"-304 | 1 |
| 8.2 | 4177800 | > O-RING EPDM PLUG HELIX VP. | 1 |
| 9 | 4214483 | MECH.SEAL HELIX6-10-16 O/E ReDTC KIT | 1 |
| 9.1 | 4177801 | > MECH.SEAL HELIX6-10-16 O/E VP. | 1 |
| 7.3 | 4176513 | > O-RING FOR PUMP JACKET VP. | 1 |
| 10 | 4177843 | HOUSING PIPES D.152X510 1.4307 KIT | 1 |
| 7.3 | 4176513 | > O-RING FOR PUMP JACKET VP. | 1 |
| 10.1 | | > HOUSING-PIPE Ø152-M+1012/1609-304 | 1 |
| 11 | 4174087 | CENTERING STAGE-RETURN HELIX6 1.4301VP. | 1 |
| 12 | 4214486 | SHAFT EQUIPMENT HELIX V6 ReDTC KIT | 1 |
| 12.1 | | > NUT-H-M10-A4.70 | 1 |
| 12.2 | | > SERRATED LOCK WASHER M+6M3-316L | 1 |
| 12.3 | | > 1/2-SNAP-RING-6/10M3-316L | 1 |
| 12.4 | | > STOP-RUSH-1/2-D16xd2-M+316 | 1 |
| 4.11 | | > SCREW CHC-M6X14-8.8-ISO4762-GEOMET500A | 1 |
| 4.12 | | > WASHER D.24 L6U ZINK | 1 |
| 13 | | HYDRAULIC HELIX V 611 1.4307 | 1 |

| Item | Article no. | Description | Quantity |
|---|---|---|---|
| 14 | 4214510 | SHAFT D.16X578 HELIX 1.4057 VP. | 1 |
| 15 | 4217897 | PUMP HOUSING HELIX DN32 PN16 1.4301 KIT | 1 |
| 7.3 | 4176513 | > O-RING FOR PUMP JACKET VP. | 1 |
| 15.1 | | > BLASTING PPE HOUSING V-PN16-DN32-5"-304 | 1 |
| 15.2 | 4217891 | > COUNTER FLANGE-G1"1/4-PN16-GJL KIT | 1 |
| 15.3 | 4171321 | > PRIMING/DRAIN PLUG EPDM HELIX KIT | 1 |
| 16 | 4177964 | BASEPLATE HELIX V2/4/6 PN16 VP. | 1 |

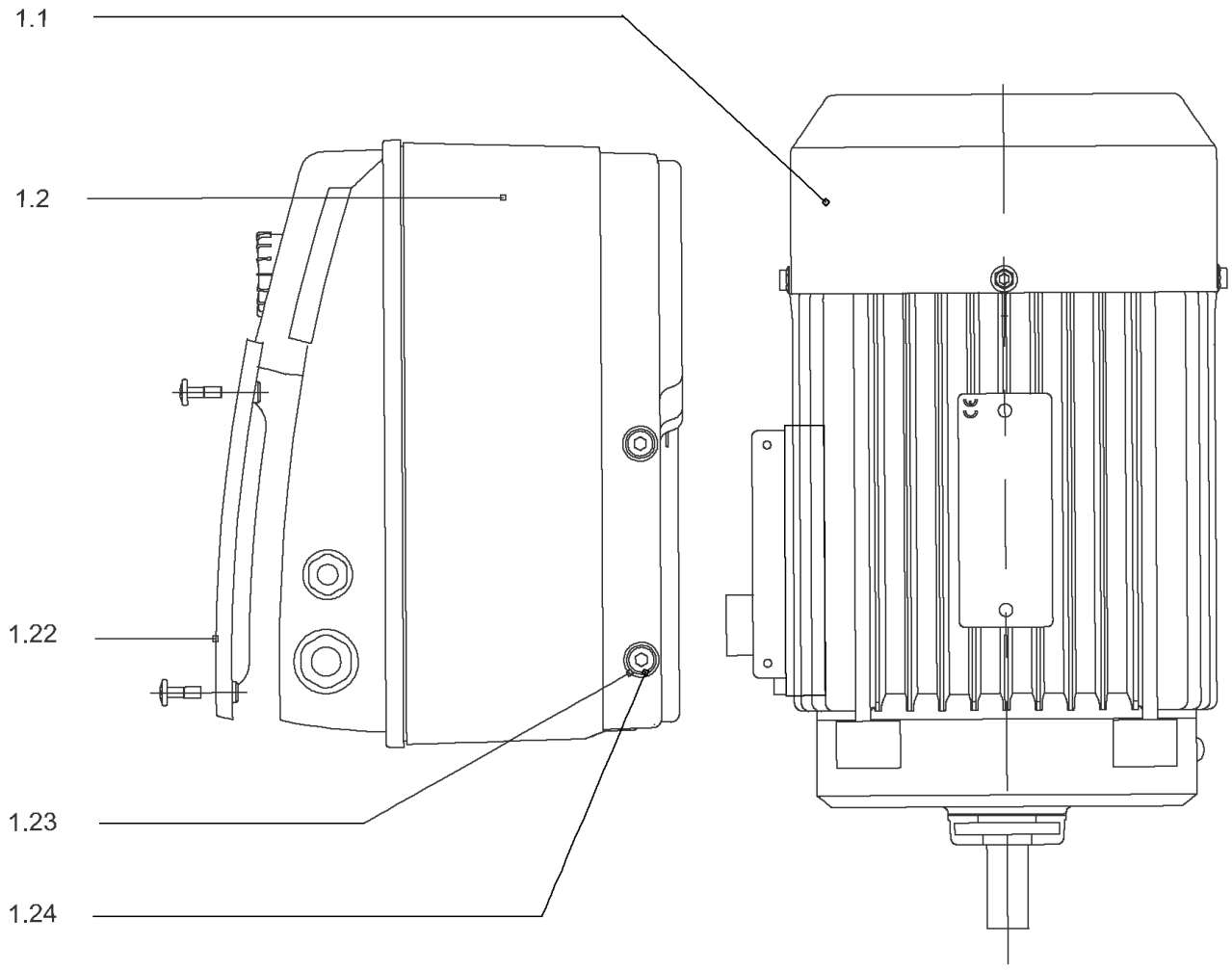
1.1
1.2
1.22
1.23
1.24

## DRIVE HELIX-VE611-IE4-WE KIT

| Item | Article no. | Description | Quantity |
|---|---|---|---|
| 1.1 | 4207924 | MOTOR 4/2/112 3~ 380V 60HZ IE4 WE VP. | 1 |
| | | SPARE PARTS MOTOR:ON REQUEST | 1 |
| 1.2 | 4209605 | MODULE HELIX-VE611-IE4-WE KIT | 1 |
| 1.22 | 2054227 | > MODULE COVER/GASKET TL3/4 KIT | 1 |
| 1.23 | 4215716 | > SCREW M5X16 DIN912 8.8 A2A (4pieces) VP. | 1 |
| 1.24 | 2057978 | > RONDELLE A5,3 DIN6797 FST ZN (4 PIECES) | 1 |

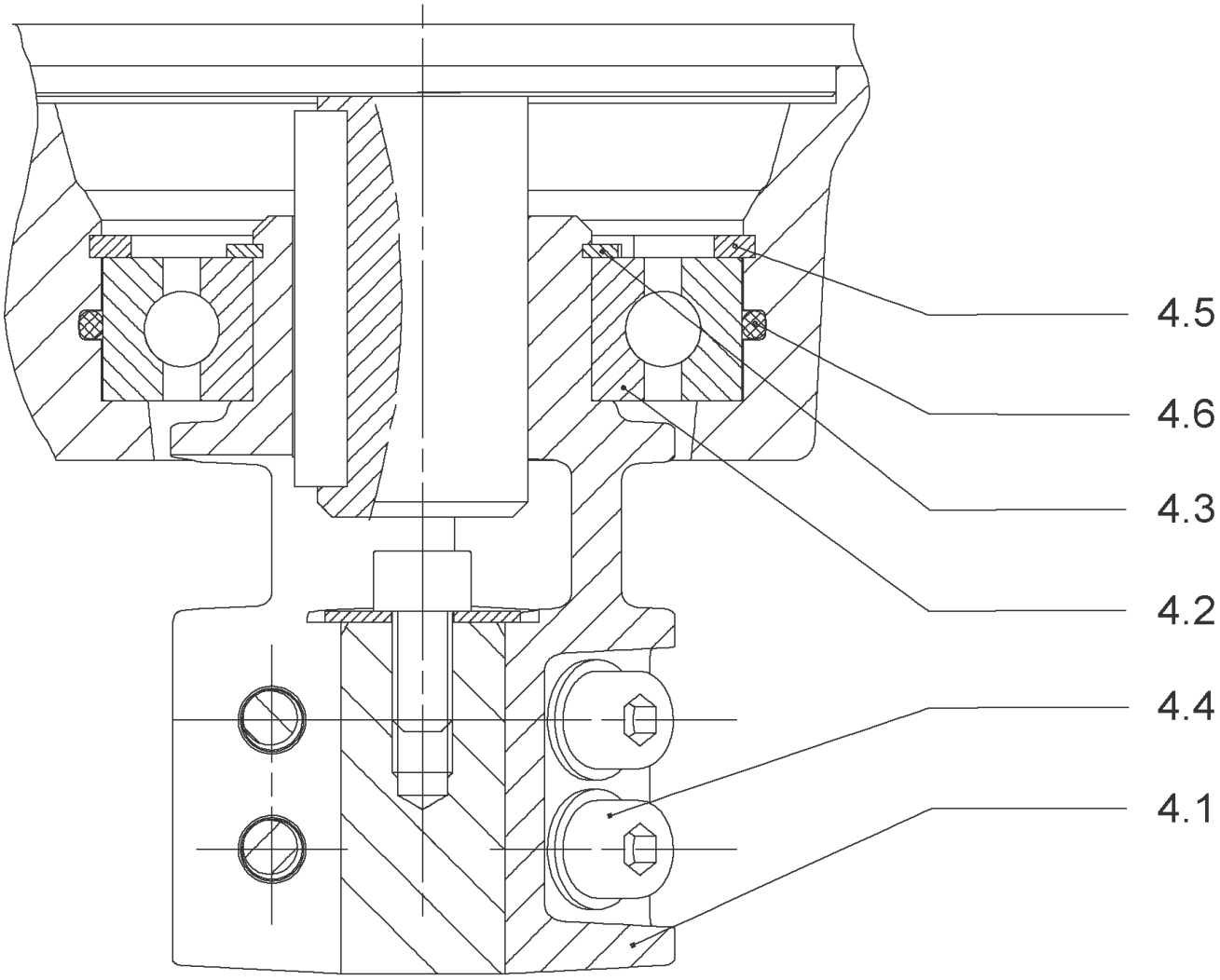
4.5
4.6
4.3
4.2
4.4
4.1

## COUPLING D.16XD.28 FT130 HELIX KIT (4159710)

| Item | Article no. | Description | Quantity |
|---|---|---|---|
| 4.1 | | COUPLING M+ Ø16XØ28 FT130 MACHINED | 1 |
| 4.2 | 2131022 | BALL BEARING 6209/ZZ-C3(HT)VP. | 1 |
| 4.3 | 4233930 | CIRCLIP-FOR-BORES-D45x1,75 VP. | 1 |
| 4.4 | 4157726 | SCREW KIT M8X30 (4 PIECES) | 1 |
| 4.5 | 4234252 | CIRCLIPS 85X3 VP. | 1 |
| 4.6 | 4234243 | O-RING 85X3 VP. | 1 |
| | | NOMEL CONTACT WASHER 8x16x1,4 STEEL ZC | 1 |

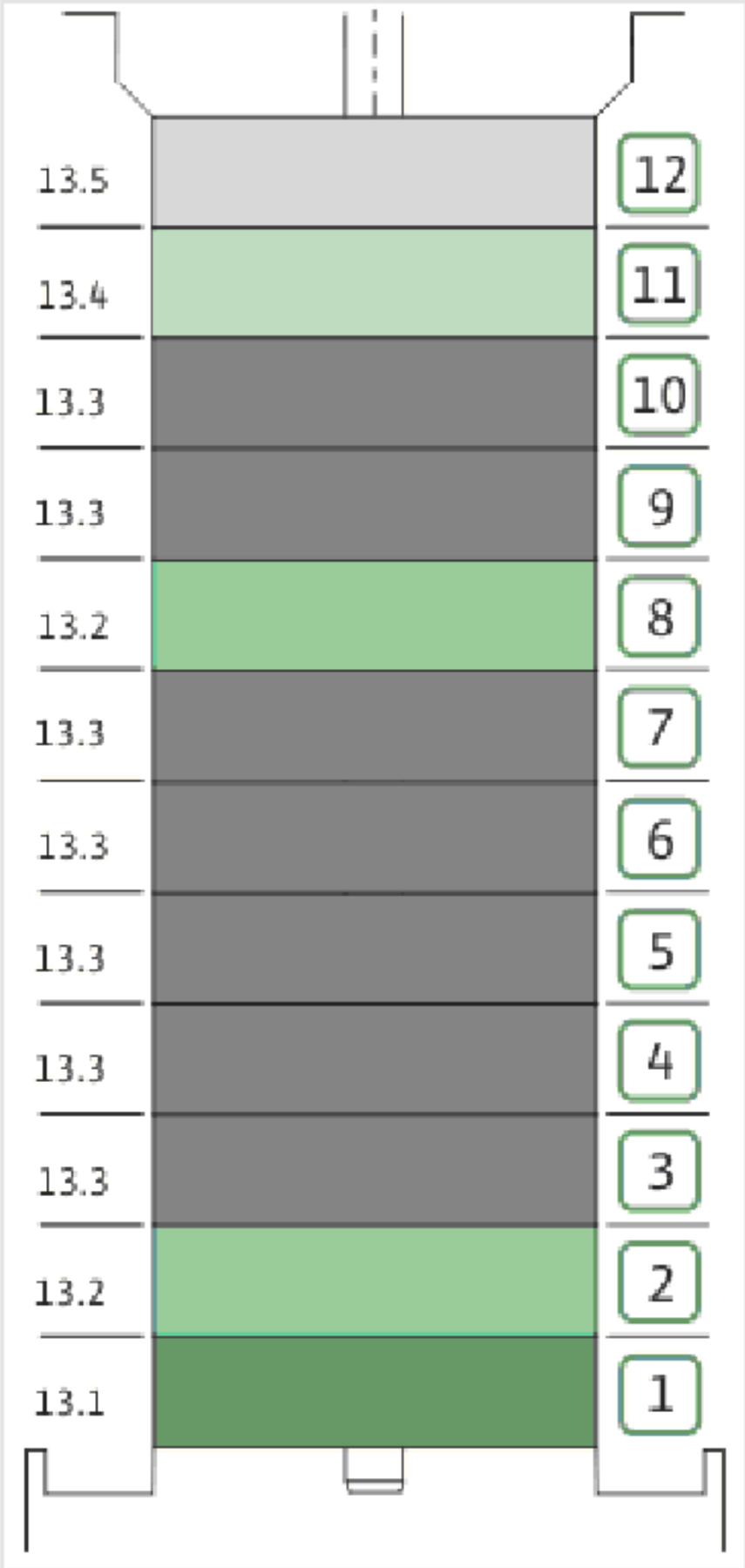
13.5
13.4
13.3
13.3
13.2
13.3
13.3
13.3
13.3
13.3
13.2
13.1
12
11
10
9
8
7
6
5
4
3
2
1

## HYDRAULIC HELIX V 611 1.4307

| Item | Article no. | Description | Quantity |
|---|---|---|---|
| 13.1 | 4174084 | STAGE HELIX 6 1.4301 KIT | 1 |
| | | > MACH.STG-CASING-WOGV-WNR-M+6-304 | 1 |
| | | > IMPELLER-M+6-304 | 1 |
| 13.2 | 4174089 | INTERMEDIATE STAGE HELIX 6 1.4301 KIT | 1 |
| | | > MACH.BEARING-STG-CASING-WNR-M+6-304 | 1 |
| | | > IMPELLER-M+6-304 | 1 |
| | | > SHAFT SLEEVE-SPACER-Ø19,35x18,465-304 | 1 |
| | | > SHAFT-SLEEVE-D16xD20x18-CW | 1 |
| 13.3 | 4174090 | INTERMEDIATE STAGE HELIX 6 1.4301 KIT | 1 |
| | | > MACH.STD-STG-CASING-WGV+NR-M+6-304 | 1 |
| | | > IMPELLER-M+6-304 | 1 |
| | | > IMPELLER SPACER Ø16,05X19,45-L36,465-304 | 1 |
| 13.4 | 4174092 | EMPTY STAGE HELIX6 1.4301KIT | 1 |
| | | > MACH.STD-STG-CASING-WGV+NR-M+6-304 | 1 |
| | | > FLAT WASHER-D16.1XD22X1.2-316L | 1 |
| | | > IMPELLER SPACER Ø16,05X19,45-L36,465-304 | 1 |
| 13.5 | 4174091 | STAGE HELIX 6 1.4301 KIT | 1 |
| | | > MACH.STG-CASING-WOGV-WNR-M+6-304 | 1 |
| | | > IMPELLER-M+6-304 | 1 |
| | | > IMPELLER SPACER Ø16,05X19,45-L36,465-304 | 1 |

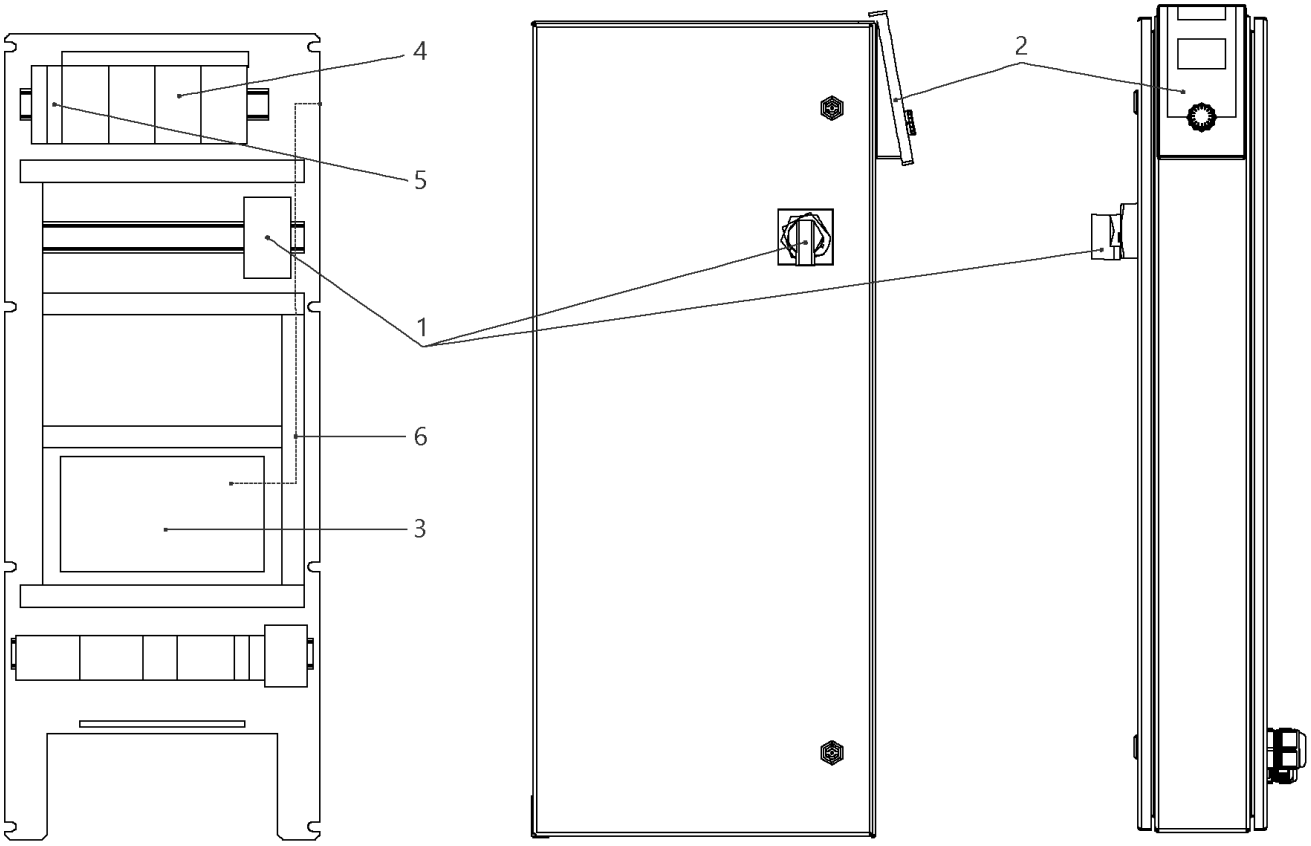
4
5
1
6
3
2

## W-CTRL-SCE-B-3x4,0KW-T4-FM-ND2

| Item | Article no. | Description | Quantity |
|---|---|---|---|
| 1 | 2104473 | MAIN SWITCH OT63F3 L105 KIT | 1 |
| 2 | 4184784 | CONTROL PANEL HMI SC KIT | 1 |
| 2 | 4185259 | ASSEMBLY DISPLAY SC PKG VP. | 1 |
| 3 | 4185257 | ASSEMBLY CPU SCe Booster VP. | 1 |
| 4 | 2051217 | AUTOM.CIRCUIT BREAKER S203 B16 TO7,5kW | 1 |
| 5 | 2046288 | CIRCUIT BREAKER S201 B16 | 1 |
| 6 | 4194956 | PATCH CABLE RJ45 CAT6 1,0M BLUE SC-PANEL | 1 |

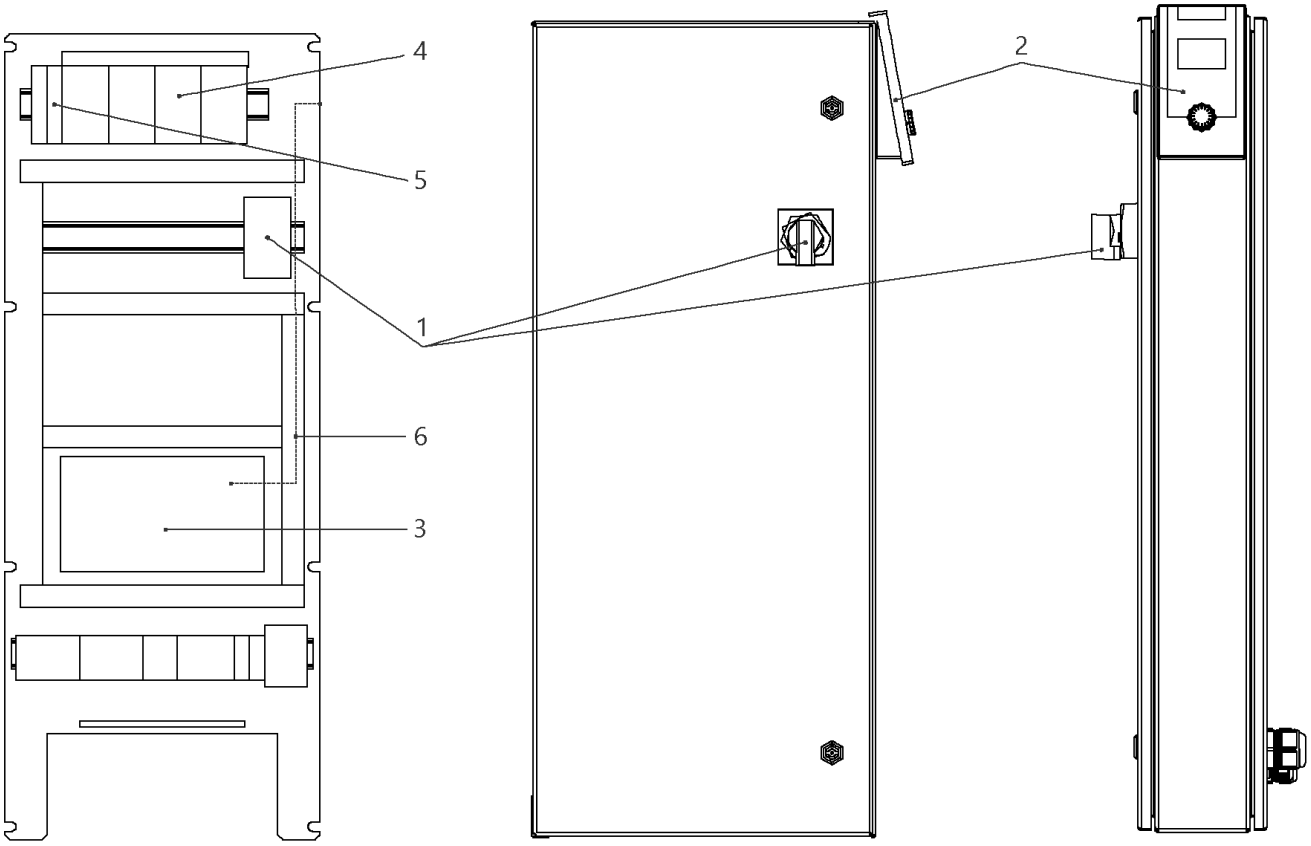
4
5
1
6
3
2

## W-CTRL-SCE-B-3x13A-T34-FM-ND2-AVC-PKG (2541906)

| Item | Article no. | Description | Quantity |
|---|---|---|---|
| 1 | 2104473 | MAIN SWITCH OT63F3 L105 KIT | 1 |
| 2 | 4184784 | CONTROL PANEL HMI SC KIT | 1 |
| 2 | 4185259 | ASSEMBLY DISPLAY SC PKG VP. | 1 |
| Note: DISPLAY ALONE / PLATINE SEULE | | | |
| 3 | 4185257 | ASSEMBLY CPU SCe Booster VP. | 1 |
| 4 | 2051217 | AUTOM.CIRCUIT BREAKER S203 B16 TO7,5kW | 1 |
| 5 | 2046288 | CIRCUIT BREAKER S201 B16 | 1 |
| 6 | 4194956 | PATCH CABLE RJ45 CAT6 1,0M BLUE SC-PANEL | 1 |

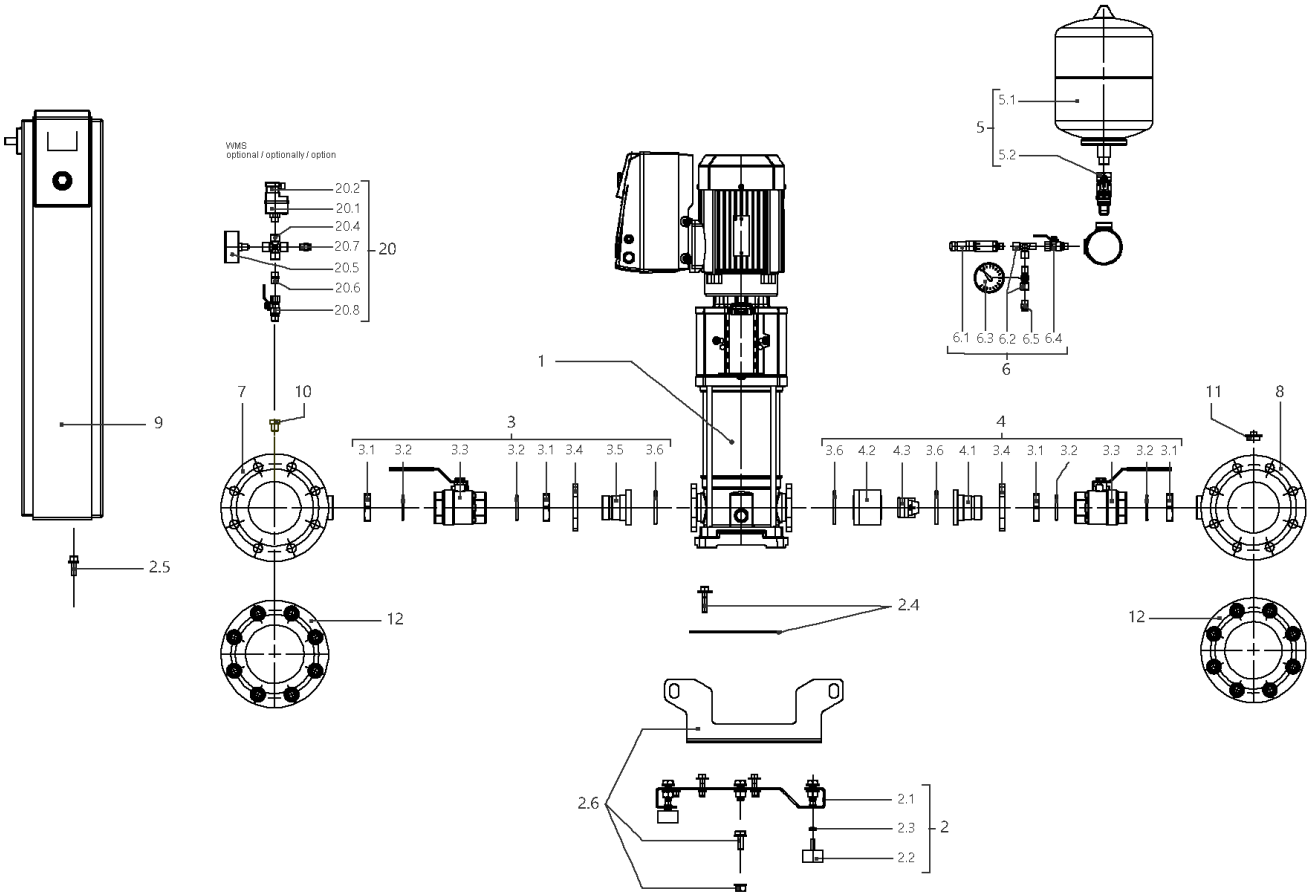
VIMS
optional / optionally / option
20.2
20.1
20.4
20.7
20.5
20.6
20.8
20
5.1
5
5.2
6.1 6.3 6.2 6.5 6.4
6
1
7
10
3
3.1 3.2 3.3 3.2 3.1 3.4 3.5 3.6
4
3.6 4.2 4.3 3.6 4.1 3.4 3.1 3.2 3.3 3.2 3.1
11
8
9
2.5
12
2.4
12
2.6
2.1
2.3
2.2
2

## SiBoost Smart 3HELIX VE1602 (2536337)

| Item | Article no. | Description | Quantity |
|---|---|---|---|
| 1 | | HELIX VE1602-1/16/E/S | 1 |
| Note: TO / BIS / JUSQU'AU 31/03/2016 | | | |
| 1 | 4201557 | HELIX VE1602-1/16/E/S | 1 |
| Note: FROM / AB / À PARTIR DU 01/04/2016 | | | |
| 2 | 4197116 | BASE PLATE DE3 1150x420 KIT | 1 |
| 2.1 | | > BASEPLATE_3x4/6/10/16V_E300_BOX_150 | 1 |
| 2.2 | 2028654 | > VIBRATION DAMPER D.50X30 M10X28 | 1 |
| 2.3 | 2028281 | > NUT M10 DIN936 (ISO4035) 17H VZ | 1 |
| 2.4 | 4197083 | > HOLDER PUMP Helix 10/16 KIT | 1 |
| 2.5 | 4197084 | > HOLDER SWITCHBOX WILO Smart Control KIT | 1 |
| 2.6 | 4197117 | > LIFTING Siboost HELIX SC KIT | 1 |
| 3 | 4197072 | SUCTION SIDE Siboost Helix10/16 KIT | 1 |
| 3.1 | 2032623 | > NUT G1 1/2"SW55 MS | 1 |
| 3.2 | 2032616 | > O-RING ID.44X3,53N DIN3771 E7502 | 1 |
| 3.2 | 2534877 | > BALL TAP KDW40-H G11/2I-I-DN40 DVGW | 1 |
| 3.4 | 2032626 | > OVAL FLANGE D52-LK100 ST-VZ | 1 |
| 3.5 | 2032627 | > UNION INSERT DN40 LAPPED FLANGE | 1 |
| 3.6 | 2032628 | > O-RING ID.56,52X5,33N DIN3771 E7502 | 1 |
| 4 | 4197829 | DELIVERY SIDE Siboost Helix V16 KIT | 1 |
| 3.1 | 2032623 | > NUT G1 1/2"SW55 MS | 1 |
| 3.2 | 2032616 | > O-RING ID.44X3,53N DIN3771 E7502 | 1 |
| 3.3 | 2534877 | > BALL TAP KDW40-H G11/2I-I-DN40 DVGW | 1 |
| 3.4 | 2032626 | > OVAL FLANGE D52-LK100 ST-VZ | 1 |
| 4.1 | 2054274 | > UNION INSERT DN40 LAPPED FLANGE(W.COLLAR | 1 |
| 4.2 | 2054270 | > HOUSING RFV(RV-IN) DN50 MS VP. | 1 |
| 4.3 | 2028284 | > NON-RETURN DEVICE UNIT NV50/DN50 VP. | 1 |
| 3.6 | 2032628 | > O-RING ID.56,52X5,33N DIN3771 E7502 | 1 |
| 5 | 2032642 | DIAPHREM TANK 8L/PN16 DIN4807/T5 KIT | 1 |
| 5.1 | 2045914 | > DIAPHREM TANK 8L TYP-DD 16BAR | 1 |
| 5.2 | 2027853 | > FLOW FITTING G3/4 FOR DIAPHRAGM VES. | 1 |
| 6 | 4197076 | PRESSURE SENSOR/ GAUGE 0-16BAR KIT | 1 |
| 6.1 | 2085909 | > PRESS.SENSOR 1/4" 0-16BAR 4-20MA VP. | 1 |
| 6.2 | 4197077 | > T-PIECE 1/4" VP. | 1 |
| 6.3 | 2028692 | > PRESSURE GAUGE NG63-PN16-G1/4 | 1 |

| Item | Article no. | Description | Quantity |
|---|---|---|---|
| 6.4 | 2028291 | > BALL TAP R1/4" PN42 GIACOMINI R254DL | 1 |
| 6.5 | 2028691 | > BLOWGUN 1/4" MS 30BAR VP. | 1 |
| 7 | 4197833 | PIPE DE3 DN100-3x11/2"+2x1/4x900 VP. | 1 |
| 8 | 4197834 | PIPE DE3 DN100-3x11/2"+2x1/4+1x3/4x900VP | 1 |
| 9 | | W-CTRL-SCE-B-3x2,2KW-T4-FM-ND2 | 1 |
| Note: TO / BIS / JUSQU'AU 18/05/2014 | | | |
| 9 | 2541902 | W-CTRL-SCE-B-3x10A-T34-FM-ND2-AVC-PKG | 1 |
| Note: FROM / AB / À PARTIR DU 19/05/2014 | | | |
| 10 | 4197079 | PLUG G1/4"x10 AISI304 KIT | 1 |
| 11 | 2032654 | PLUG R3/4" MS VIEGA 1751 | 1 |
| 12 | 4197835 | BLIND-FLANGE DN100 PN16 -1.4404 KIT | 1 |
| | 2106342 | > FLAT GASKET D.120/162X2 DN100 C4430 VP. | 1 |
| | | > NUT M16 DIN934 A2 1.4301 | 1 |
| | | > SCREW M16x70 DIN933 A2 (8 PIECES) | 1 |
| | | > WASHER A17 DIN125 A2 | 1 |
| | | > FULL FLANGE ST.DN100 PN16 EN1092-1/05 A | 1 |
| | | > FLANGE COVER DN100 DIN 3443 FORM A | 1 |
| 20 | 2521150 | ASSEMBLY WMS. DE-EB. +VP | 1 |
| 20.1 | 2028652 | > PRESSURE SWITCH PS3-ASR 1/(1,3) VP. | 1 |
| 20.2 | 2130983 | > PLUG PS3-415 WITH KABEL 1,5M 2NO VP. | 1 |
| 20.4 | 2028290 | > CROSSPIECE R1/4" MS-NICKEL | 1 |
| 20.5 | 2028687 | > PRESSURE GAUGE NG63 R1/4" HI.0-6BAR | 1 |
| 20.6 | 2054268 | > DUAL NIPPLE G1/4" x G1/4" MS VP. | 1 |
| 20.7 | 2028691 | > BLOWGUN 1/4" MS 30BAR VP. | 1 |
| 20.8 | 2028291 | > BALL TAP R1/4" PN42 GIACOMINI R254DL | 1 |

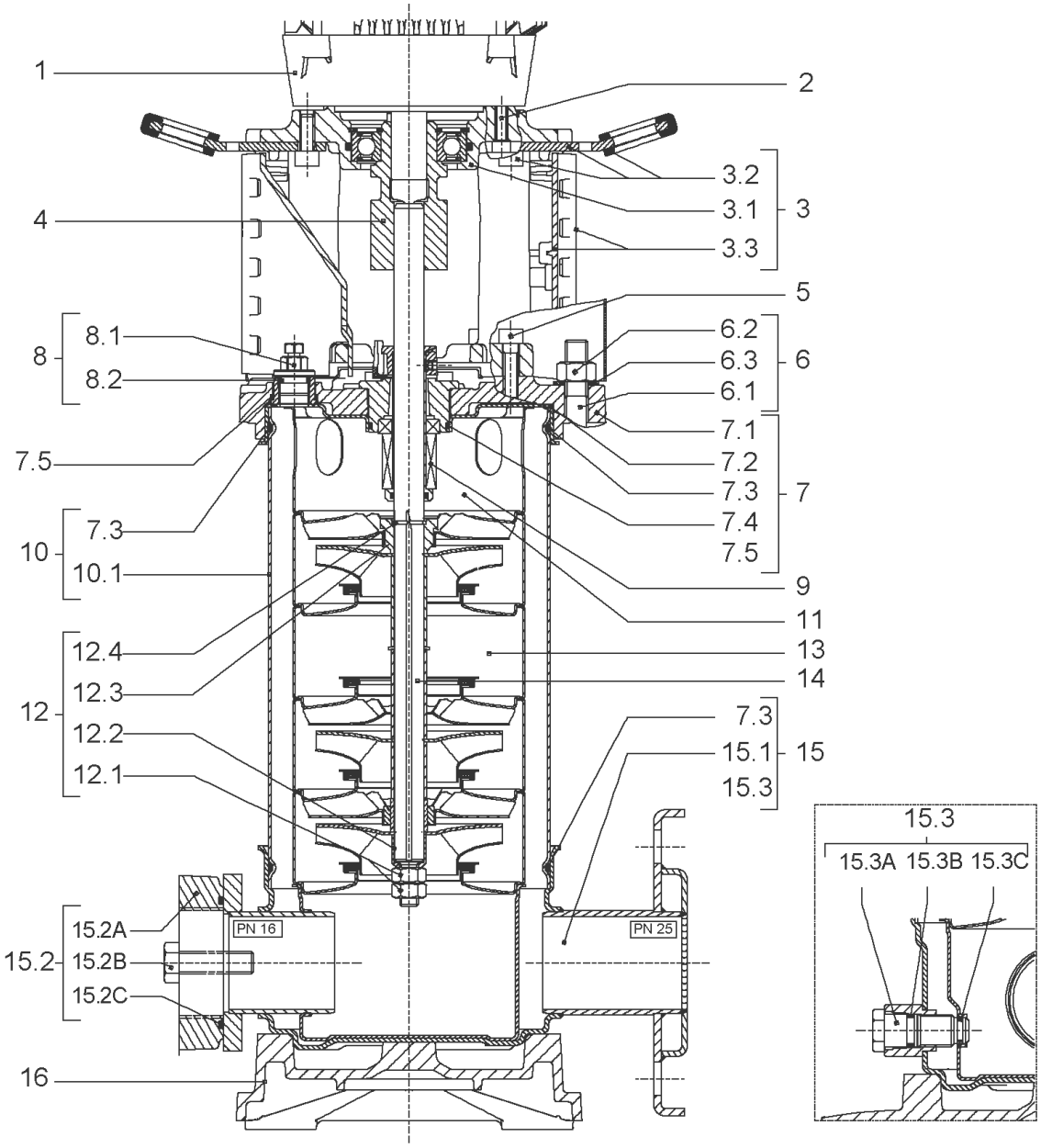
1
2
3.2
3.1
3
3.3
4
5
8.1
8
8.2
6.2
6.3
6
6.1
7.1
7.5
7.2
7.3
7
7.4
7.3
10
7.5
10.1
9
11
12.4
13
12.3
14
12
12.2
7.3
15.1
15
12.1
15.3
15.3
15.3A 15.3B 15.3C
15.2A
PN 16
PN 25
15.2
15.2B
15.2C
16

| Item | Article no. | Description | Quantity |
|---|---|---|---|
| 1 | | DRIVE HELIX-VE1602-IE2-ATB KIT | 1 |
| Note: MOTOR BRAND ATB | | | |
| 1 | | DRIVE HELIX-VE1602-IE2-WE KIT | 1 |
| Note: MOTOR BRAND WILO ELEC | | | |
| 1 | | DRIVE HELIX-VE1602-IE4-WE KIT | 1 |
| Note: MOTOR BRAND WILO ELEC | | | |
| 2 | 4159703 | SCREW M8X40 (4 PIECES) | 1 |
| 3 | 4172795 | LANTERNE FT115 HELIX KIT | 1 |
| 3.1 | | > M+5_6_LANTERN_ONE-PIECE_FT115_CATA | 1 |
| 3.2 | 2127604 | > EYELET CPL.FT HELIX(2 PIECES) | 1 |
| 3.3 | 4159692 | > COUPLING PROTECTOR FT HELIX KIT | 1 |
| 4 | 4159709 | COUPLING D.16xD.24 FT115 HELIX KIT | 1 |
| 5 | 4159707 | SCREW M8X30 (4 PIECES) | 1 |
| 6 | 2018368 | STUD BOLT M12X289 KIT | 1 |
| 6.1 | | > TIE BOLT M12-289x18x30-1.4057 | 1 |
| 6.2 | 2094647 | > NUT M12 M12 ISO4032 VP. | 1 |
| 6.3 | 2123557 | > WASHER CS-12.4-24-1.6-NFE25 (4 PIECES) | 1 |
| 7 | 4210143 | STATIONARY RING HOLDER HELIX 6" EPDM | 1 |
| 7.2 | 2127607 | > STATIONARY RING HOLDER 6" HELIX 1.4301 V | 1 |
| 7.3 | 4176513 | > O-RING FOR PUMP JACKET VP. | 1 |
| 7.4 | 2127603 | > O-RING ID.37,6x2,4 EPDM VP. | 1 |
| 7.5 | 2127602 | > O-RING ID.21,35x2 EPDM VP. | 1 |
| 8 | 4159686 | FILING/PURGING PLUG HELIX EPDM KIT | 1 |
| 9 | 4171327 | SEAL-KIT-HELIX6-10-16 O/E KIT | 1 |
| 10 | 2127574 | HOUSING PIPE D.152x160 1.4301 KIT | 1 |
| 7.3 | 4176513 | > O-RING FOR PUMP JACKET VP. | 1 |
| 10.1 | | > HOUSING-PIPE Ø152-M+1601/02-304 | 1 |
| 11 | 2127588 | CENTERING STAGE-RETURN HELIX16 1.4301 VP | 1 |
| 12 | 4209329 | SHAFT EQUIPMENT HELIX V16 KIT | 1 |
| 12.1 | | > NUT-H-M10-A4.70 | 1 |
| 12.2 | | > SERRATED LOCK WASHER M+16M3-316L | 1 |
| 12.3 | | > IMPELLER STOP RING L35,9-304 | 1 |
| 12.4 | | > STOP-RUSH-1/2-D16xd2-M+316 | 1 |
| 13 | | HYDRAULIC HELIX V 1602 1.4307 | 1 |

| Item | Article no. | Description | Quantity |
|---|---|---|---|
| 14 | 2127563 | SHAFT D.16X280 1.4301 VP. | 1 |
| 15 | 4217899 | PUMP HOUSING HELIX DN50 PN16 1.4301 KIT | 1 |
| 7.3 | 4176513 | > O-RING FOR PUMP JACKET VP. | 1 |
| 15.1 | | > BLASTING PPE HOUSING V-PN16-DN50-304 | 1 |
| 15.2 | 4217895 | > COUNTER FLANGE-G2"-PN16-GJL KIT | 1 |
| 15.3 | 4171321 | > PRIMING/DRAIN PLUG EPDM HELIX KIT | 1 |
| 16 | 2127601 | BASEPLATE HELIX V16 VP. | 1 |

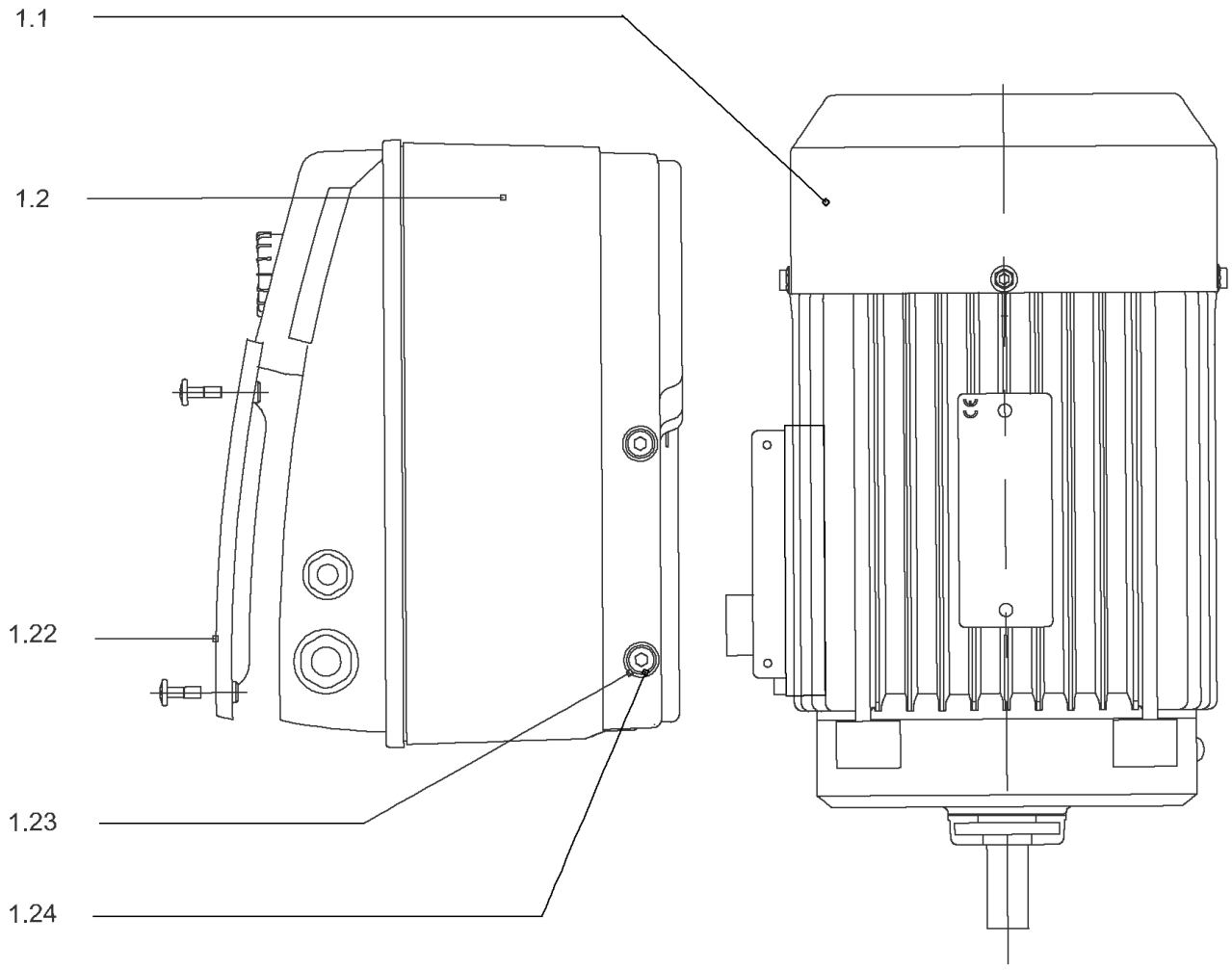
1.1
1.2
1.22
1.23
1.24

## DRIVE HELIX-VE1602-IE2-ATB KIT

| Item | Article no. | Description | Quantity |
|---|---|---|---|
| 1.1 | | M2,2-2T638P55V18-90F11-SU-N24-ADAPT-IE2 | 1 |
| Note: no longer available/nicht mehrlieferbarn'est plus disponible | | | |
| | | SPARE PARTS MOTOR:ON REQUEST | 1 |
| 1.2 | 4220618 | MODULE HELIX-VE1602-IE2-ATB KIT | 1 |
| 1.22 | 2054227 | > MODULE COVER/GASKET TL3/4 KIT | 1 |
| 1.23 | 4215716 | > SCREW M5X16 DIN912 8.8 A2A (4pieces) VP. | 1 |
| 1.24 | 2057978 | > RONDELLE A5,3 DIN6797 FST ZN (4 PIECES) | 1 |

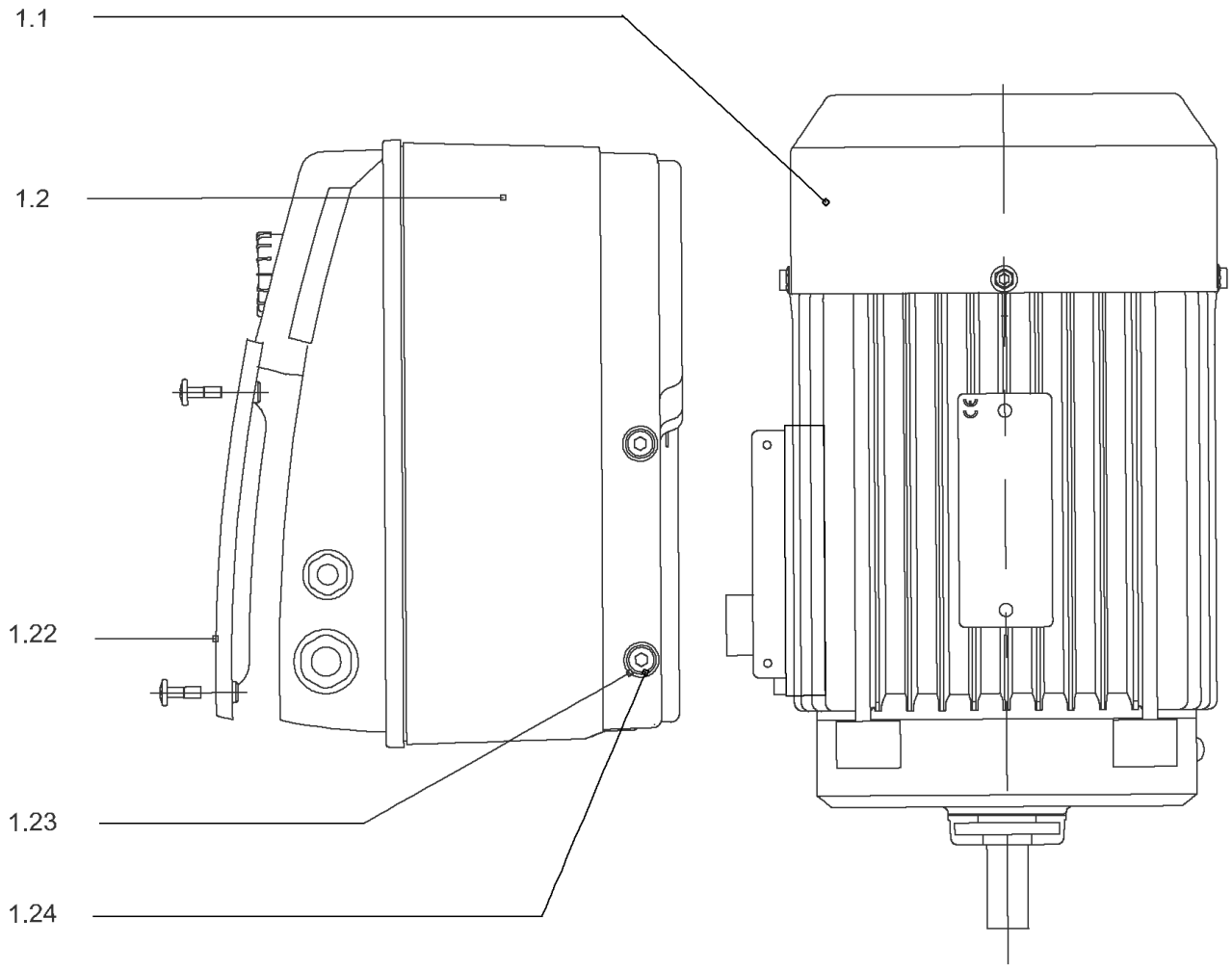
1.1
1.2
1.22
1.23
1.24

## DRIVE HELIX-VE1602-IE2-WE KIT

| Item | Article no. | Description | Quantity |
|---|---|---|---|
| 1.1 | 4185016 | MOTOR 2,2/2/90 3~ 380V 60HZ IE2 WE VP. | 1 |
| | | SPARE PARTS MOTOR:ON REQUEST | 1 |
| 1.2 | 4185020 | MODULE HELIX-VE1602-IE2-WE KIT | 1 |
| 1.22 | 2054227 | > MODULE COVER/GASKET TL3/4 KIT | 1 |
| 1.23 | 4215716 | > SCREW M5X16 DIN912 8.8 A2A (4pieces) VP. | 1 |
| 1.24 | 2057978 | > RONDELLE A5,3 DIN6797 FST ZN (4 PIECES) | 1 |

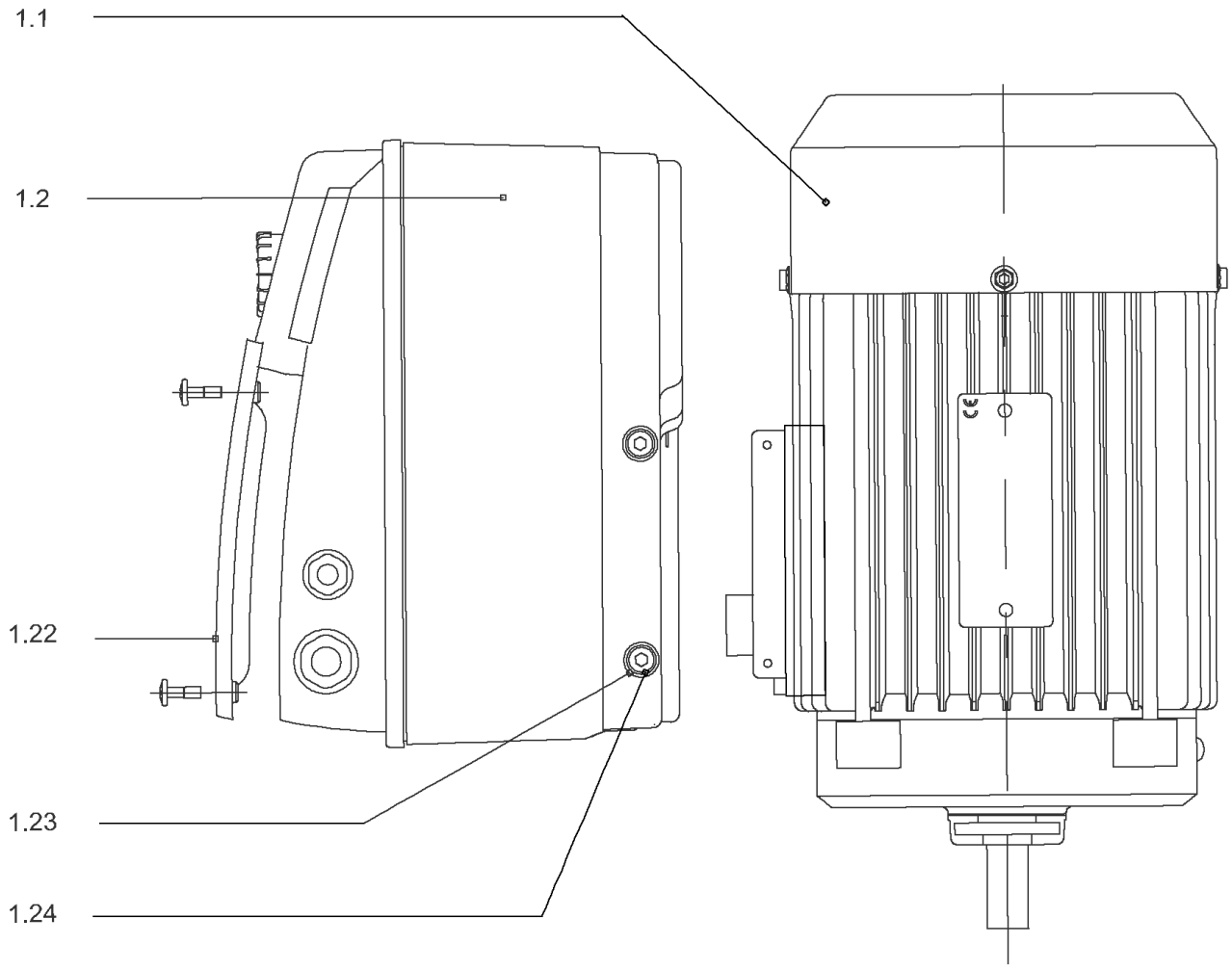
1.1
1.2
1.22
1.23
1.24

## DRIVE HELIX-VE1602-IE4-WE KIT

| Item | Article no. | Description | Quantity |
|---|---|---|---|
| 1.1 | 4207920 | MOTOR 2.2/2/90 3~ 380V 60HZ IE4 WE VP. | 1 |
| | | SPARE PARTS MOTOR:ON REQUEST | 1 |
| 1.2 | 4209593 | MODULE HELIX-VE1602-IE4-WE KIT | 1 |
| 1.22 | 2054227 | > MODULE COVER/GASKET TL3/4 KIT | 1 |
| 1.23 | 4215716 | > SCREW M5X16 DIN912 8.8 A2A (4pieces) VP. | 1 |
| 1.24 | 2057978 | > RONDELLE A5,3 DIN6797 FST ZN (4 PIECES) | 1 |

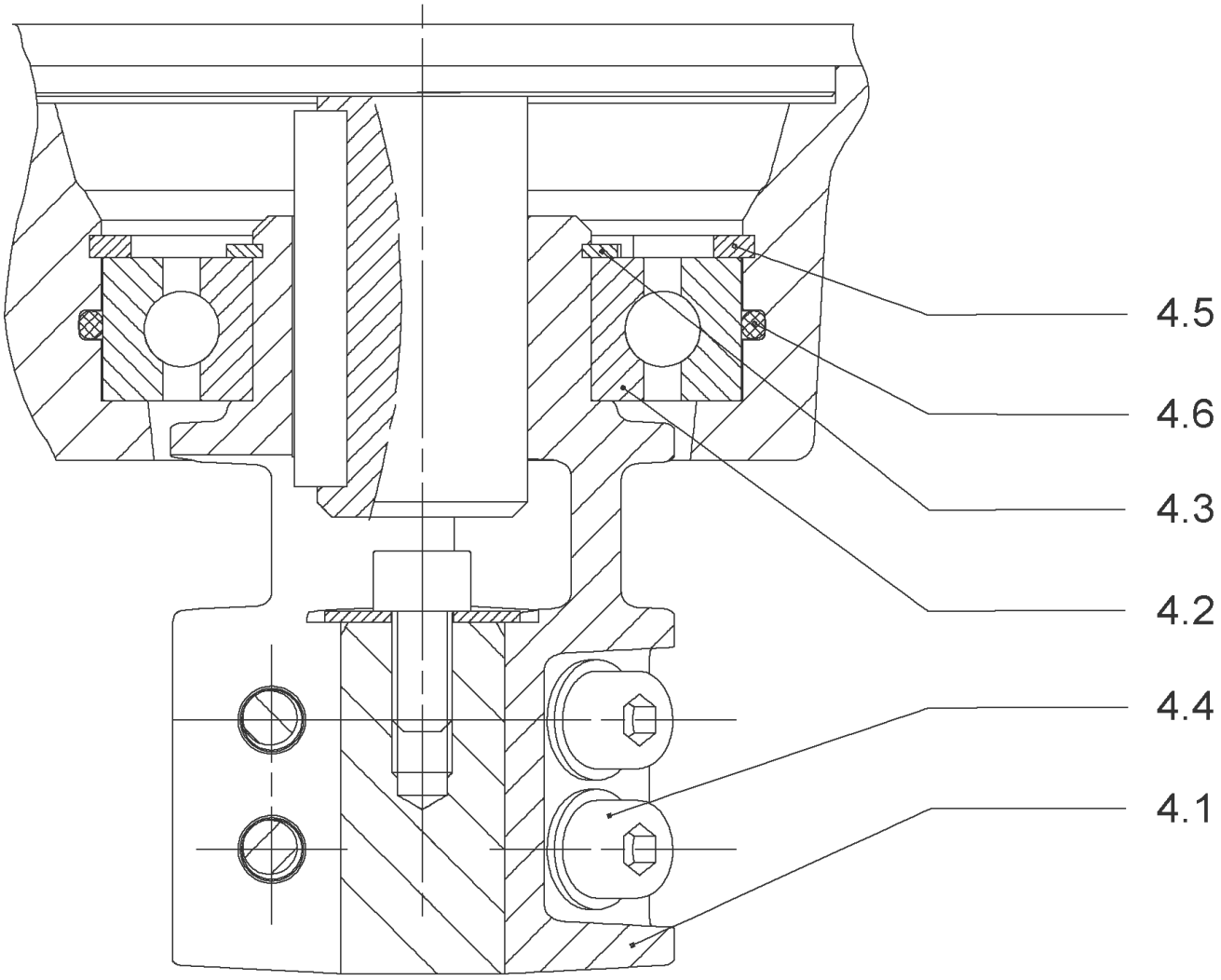
4.5
4.6
4.3
4.2
4.4
4.1

## COUPLING D.16xD.24 FT115 HELIX KIT (4159709)

| Item | Article no. | Description | Quantity |
|---|---|---|---|
| 4.1 | | COUPLING M+ Ø16XØ24 FT115 MACHINED | 1 |
| 4.2 | 2131023 | BALL BEARING 6207/ZZ-C3(HT)VP. | 1 |
| 4.3 | 4234254 | CIRCLIP-FOR-SHAFT-D35x1.5 VP. | 1 |
| 4.4 | 4157726 | SCREW KIT M8X30 (4 PIECES) | 1 |
| 4.5 | 4234251 | CIRCLIP-D72x2.5 VP. | 1 |
| 4.6 | 4234246 | O-RING 72X3 VP. | 1 |
| | | NOMEL CONTACT WASHER 8x16x1,4 STEEL ZC | 1 |

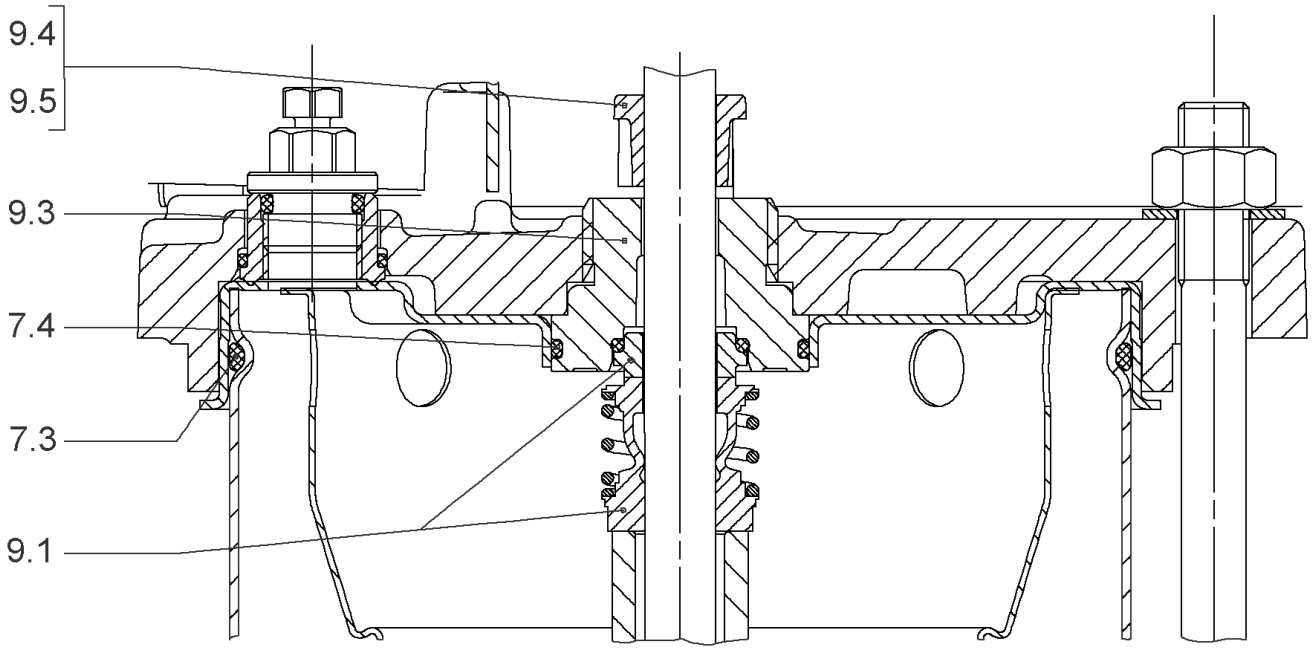
9.4
9.5
9.3
7.4
7.3
9.1

## SEAL-KIT-HELIX6-10-16 O/E KIT (4171327)

| Item | Article no. | Description | Quantity |
|---|---|---|---|
| 7.3 | 4176513 | O-RING FOR PUMP JACKET VP. | 1 |
| 7.4 | 2127603 | O-RING ID.37,6x2,4 EPDM VP. | 1 |
| 9.1 | 4177801 | MECH.SEAL HELIX6-10-16 O/E VP. | 1 |
| 9.3 | 4177798 | MACHINED RING HOLDER M+6" Ø16 304 VP. | 1 |
| 9.5 | 4177799 | MACHINED DRIVE RING Ø16 VP. | 1 |
| 9.4 | 4176520 | SCREW CH M5x5 A4-70 ( 3PIECES ) | 1 |

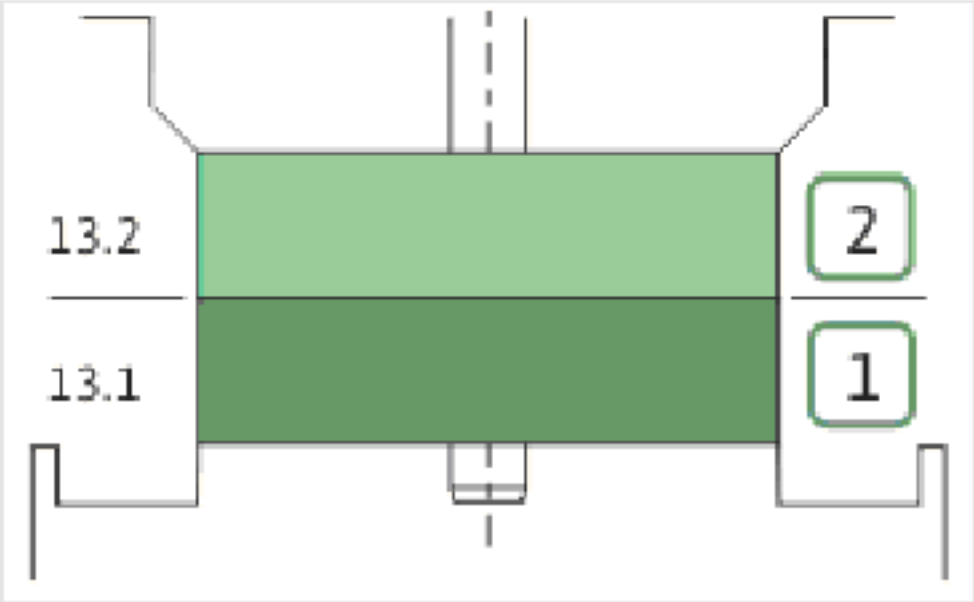
13.2
13.1
2
1

| Item | Article no. | Description | Quantity |
|---|---|---|---|
| 13.1 | 4159720 | STAGE HELIX 16 1.4301 KIT | 1 |
| | | > MACH.STG-CASING-WOGV-WNR-M+16-304 | 1 |
| | | > IMPELLER-M+16-304 | 1 |
| 13.2 | 4159714 | STAGE BEARING HELIX 16 1.4301 KIT | 1 |
| | | > MACH.BEARING-STG-CASING-WNR-M+16-304 | 1 |
| | | > IMPELLER-M+16-304 | 1 |
| | | > SLEEVE-SPACER-Ø19,35x30,665-304 | 1 |
| | | > SHAFT-SLEEVE-D16xD20x18-CW | 1 |

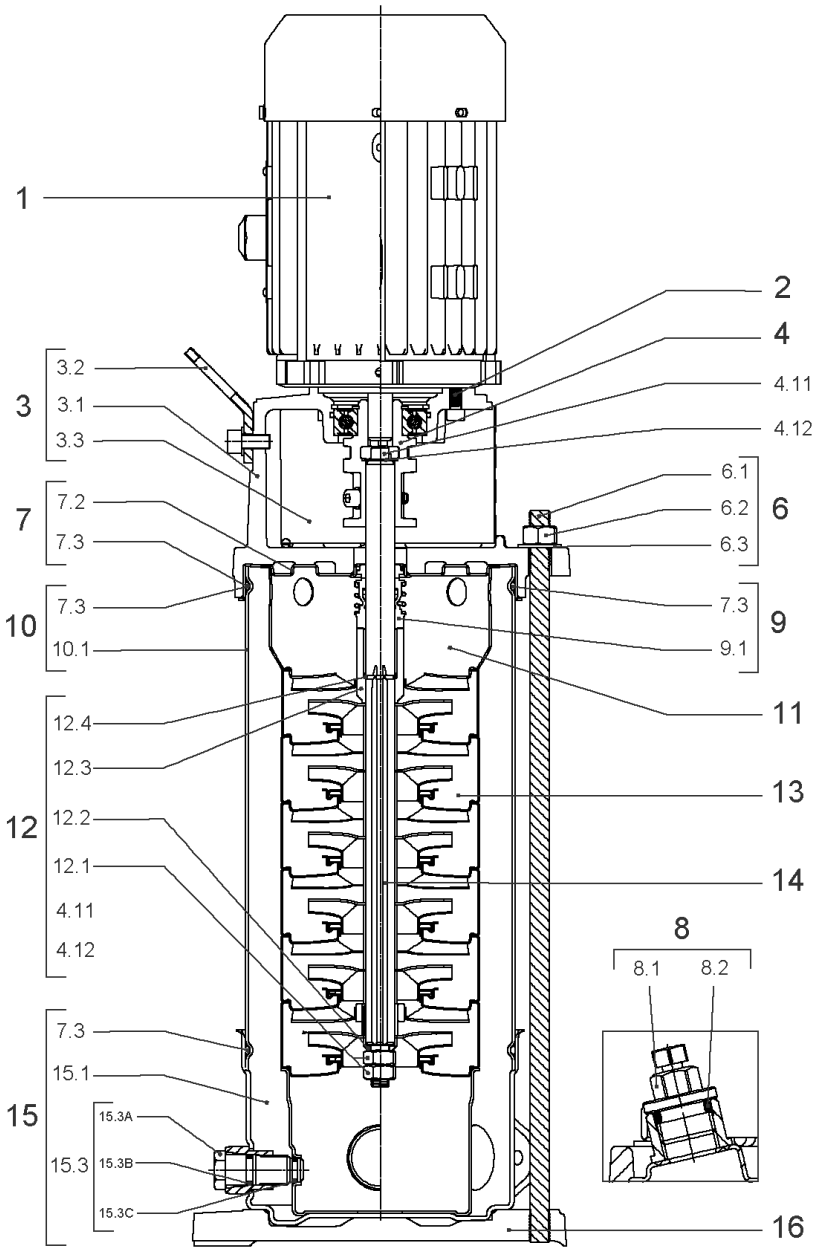
1
2
4
4.11
4.12
3
3.2
3.1
3.3
7
7.2
7.3
10
7.3
10.1
6
6.1
6.2
6.3
9
7.3
9.1
11
12
12.4
12.3
12.2
12.1
4.11
4.12
13
14
8
8.1
8.2
15
7.3
15.1
15.3
15.3A
15.3B
15.3C
16

## HELIX VE1602-1/16/E/S (4201557)

| Item | Article no. | Description | Quantity |
|---|---|---|---|
| 1 | | DRIVE HELIX-VE1602-IE4-WE KIT | 1 |
| Note: MOTOR BRAND WILO ELEC | | | |
| | | SPARE PARTS MOTOR:ON REQUEST | 1 |
| 2 | 4159707 | SCREW M8X30 (4 PIECES) | 1 |
| 3 | 4213784 | LANTERN FT115 HELIX KIT | 1 |
| 3.1 | | > LANT-MOT-VMI-ReDTC6"-FT115-MACHINED+CATA | 1 |
| 3.2 | 4184852 | > EYELET CPL.FT HELIX (2 PIECES) | 1 |
| 3.3 | 4213782 | > COUPLING PROTECTOR FT115/130 HELIX KIT | 1 |
| 4 | 4159709 | COUPLING D.16xD.24 FT115 HELIX KIT | 1 |
| 6 | 2018368 | STUD BOLT M12X289 KIT | 1 |
| 6.1 | | > TIE BOLT M12-289x18x30-1.4057 | 1 |
| 6.2 | 2094647 | > NUT M12 M12 ISO4032 VP. | 1 |
| 6.3 | 2123557 | > WASHER CS-12.4-24-1.6-NFE25 (4 PIECES) | 1 |
| 7 | 4214481 | STATIONARY RING HOLDER HELIX D27 ReDTC | 1 |
| 7.2 | 4214479 | > STATIONARY RING HOLDER HELIX D27 VP. | 1 |
| 7.3 | 4176513 | > O-RING FOR PUMP JACKET VP. | 1 |
| 8 | 4212724 | FILING/PURGING PLUG HELIX ReDTC KIT | 1 |
| 8.1 | | > FILLING PLUG MVI6"-304 | 1 |
| 8.2 | 4177800 | > O-RING EPDM PLUG HELIX VP. | 1 |
| 9 | 4214483 | MECH.SEAL HELIX6-10-16 O/E ReDTC KIT | 1 |
| 9.1 | 4177801 | > MECH.SEAL HELIX6-10-16 O/E VP. | 1 |
| 7.3 | 4176513 | > O-RING FOR PUMP JACKET VP. | 1 |
| 10 | 2127574 | HOUSING PIPE D.152x160 1.4301 KIT | 1 |
| 7.3 | 4176513 | > O-RING FOR PUMP JACKET VP. | 1 |
| 10.1 | | > HOUSING-PIPE Ø152-M+1601/02-304 | 1 |
| 11 | 2127588 | CENTERING STAGE-RETURN HELIX16 1.4301 VP | 1 |
| 12 | 4214520 | SHAFT EQUIPMENT HELIX V16 ReDTC KIT | 1 |
| 12.1 | | > NUT-H-M10-A4.70 | 1 |
| 12.2 | | > SERRATED LOCK WASHER M+16M3-316L | 1 |
| 12.3 | | > 1/2-SNAP-RING-16M3-316L | 1 |
| 12.4 | | > STOP-RUSH-1/2-D16xd2-M+316 | 1 |
| 4.11 | | > SCREW CHC-M6X14-8.8-ISO4762-GEOMET500A | 1 |
| 4.12 | | > WASHER D.24 L6U ZINK | 1 |
| 13 | | HYDRAULIC HELIX V 1602 1.4307 | 1 |

| Item | Article no. | Description | Quantity |
|---|---|---|---|
| 14 | 4214522 | SHAFT D.16X228 HELIX 1.4057 VP. | 1 |
| 15 | 4217899 | PUMP HOUSING HELIX DN50 PN16 1.4301 KIT | 1 |
| 7.3 | 4176513 | > O-RING FOR PUMP JACKET VP. | 1 |
| 15.1 | | > BLASTING PPE HOUSING V-PN16-DN50-304 | 1 |
| 15.2 | 4217895 | > COUNTER FLANGE-G2"-PN16-GJL KIT | 1 |
| 15.3 | 4171321 | > PRIMING/DRAIN PLUG EPDM HELIX KIT | 1 |
| 16 | 2127601 | BASEPLATE HELIX V16 VP. | 1 |

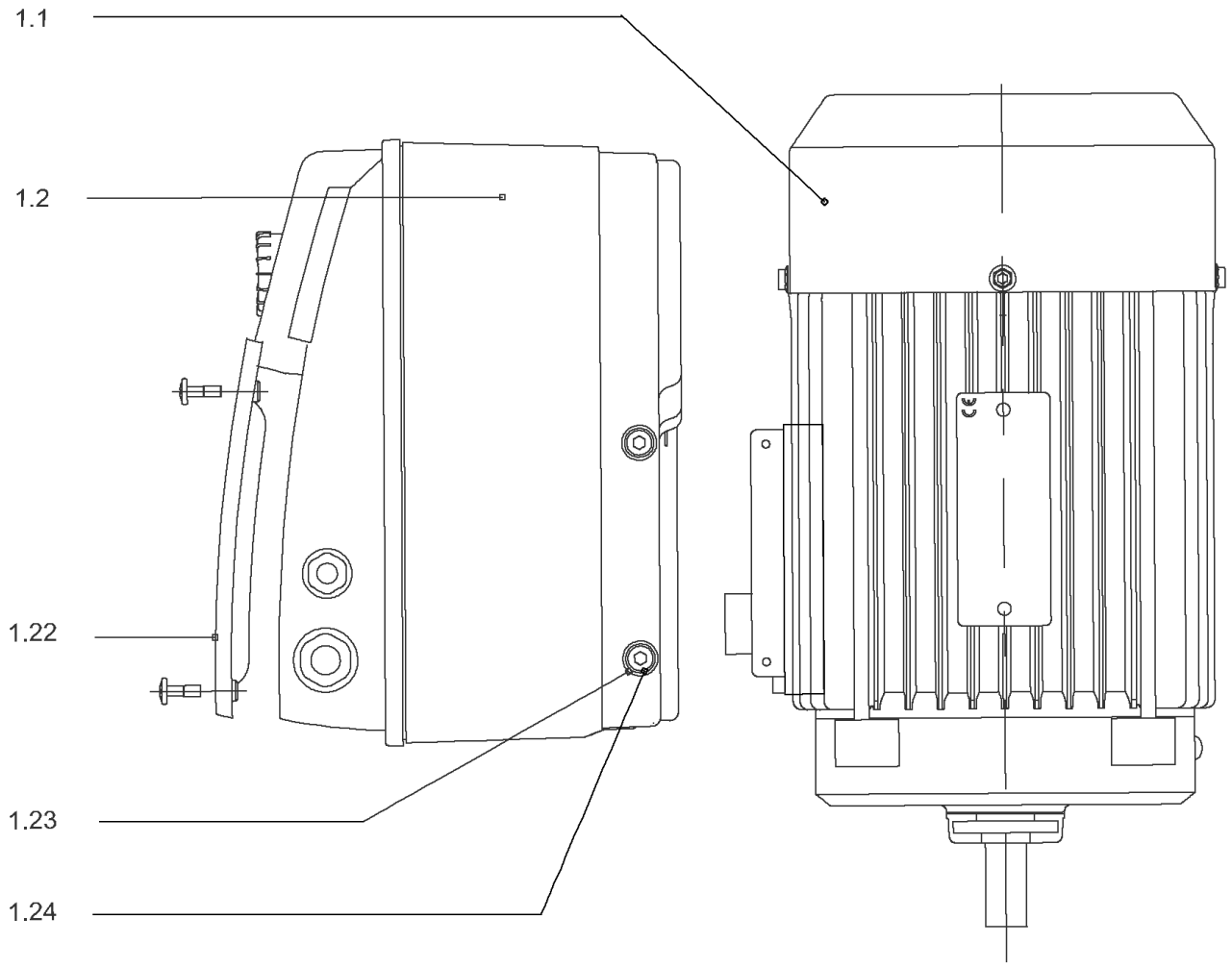
1.1
1.2
1.22
1.23
1.24

## DRIVE HELIX-VE1602-IE4-WE KIT

| Item | Article no. | Description | Quantity |
|---|---|---|---|
| 1.1 | 4207920 | MOTOR 2.2/2/90 3~ 380V 60HZ IE4 WE VP. | 1 |
| | | SPARE PARTS MOTOR:ON REQUEST | 1 |
| 1.2 | 4209593 | MODULE HELIX-VE1602-IE4-WE KIT | 1 |
| 1.22 | 2054227 | > MODULE COVER/GASKET TL3/4 KIT | 1 |
| 1.23 | 4215716 | > SCREW M5X16 DIN912 8.8 A2A (4pieces) VP. | 1 |
| 1.24 | 2057978 | > RONDELLE A5,3 DIN6797 FST ZN (4 PIECES) | 1 |

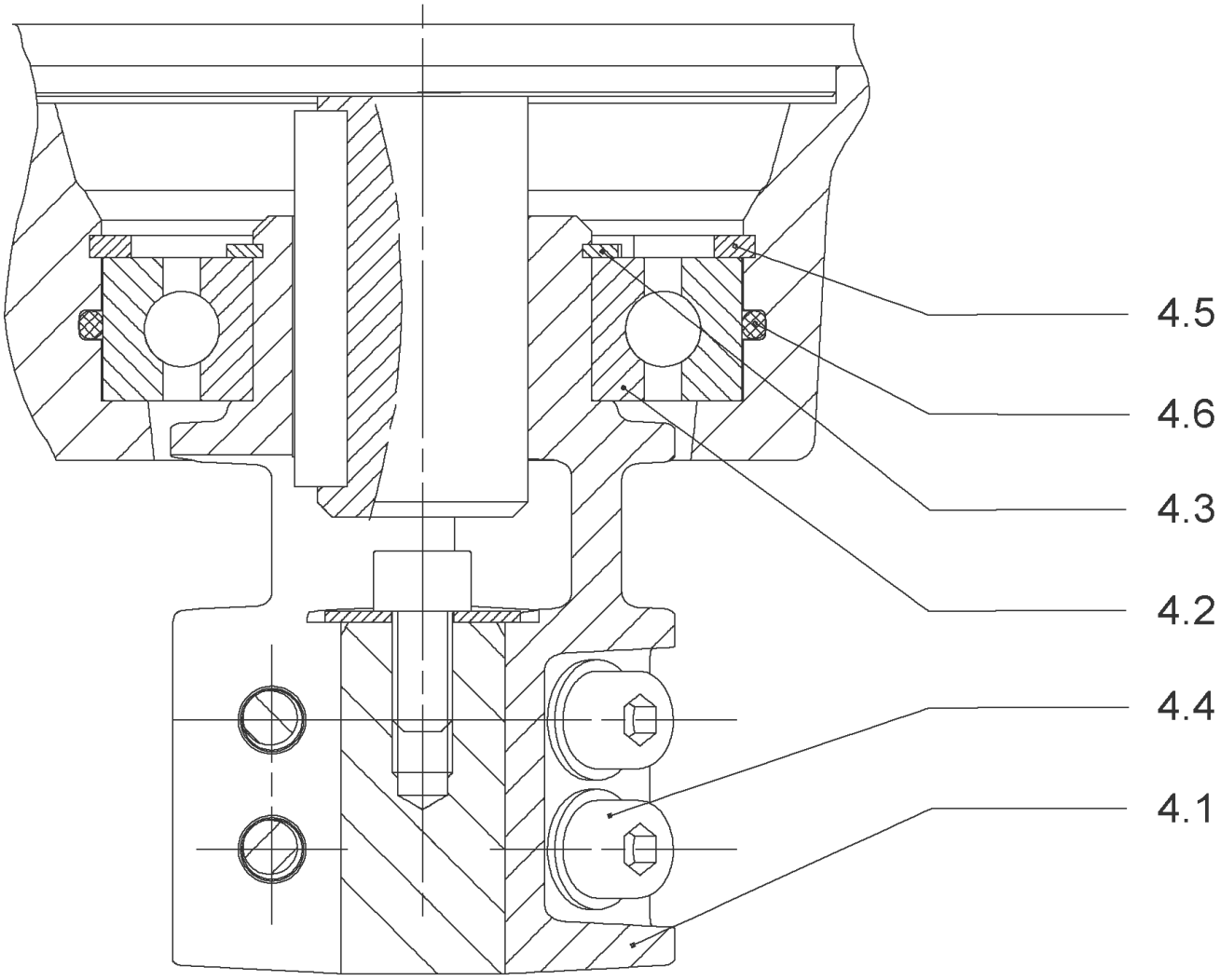
4.5
4.6
4.3
4.2
4.4
4.1

## COUPLING D.16xD.24 FT115 HELIX KIT (4159709)

| Item | Article no. | Description | Quantity |
|---|---|---|---|
| 4.1 | | COUPLING M+ Ø16XØ24 FT115 MACHINED | 1 |
| 4.2 | 2131023 | BALL BEARING 6207/ZZ-C3(HT)VP. | 1 |
| 4.3 | 4234254 | CIRCLIP-FOR-SHAFT-D35x1.5 VP. | 1 |
| 4.4 | 4157726 | SCREW KIT M8X30 (4 PIECES) | 1 |
| 4.5 | 4234251 | CIRCLIP-D72x2.5 VP. | 1 |
| 4.6 | 4234246 | O-RING 72X3 VP. | 1 |
| | | NOMEL CONTACT WASHER 8x16x1,4 STEEL ZC | 1 |

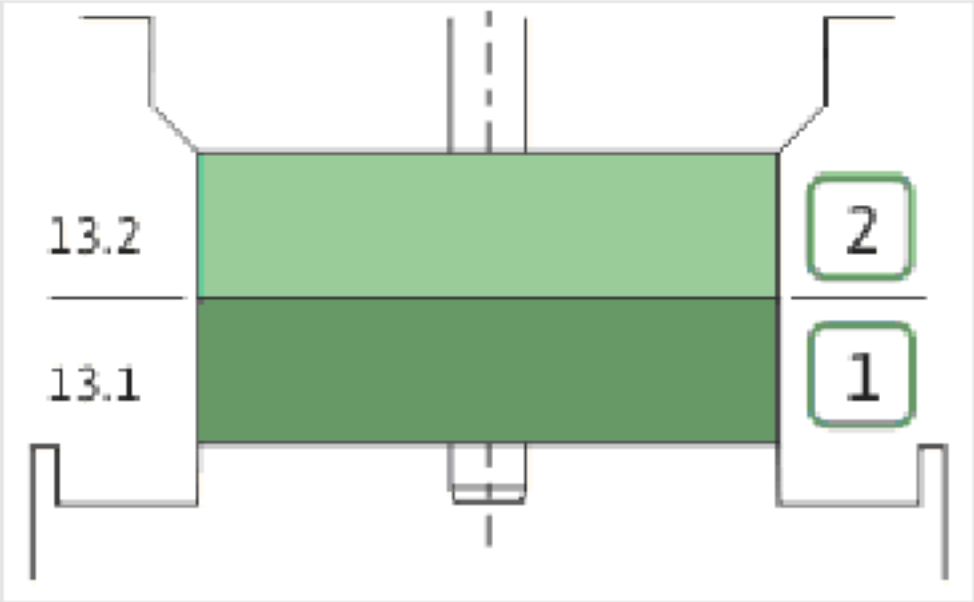
13.2
13.1
2
1

| Item | Article no. | Description | Quantity |
|---|---|---|---|
| 13.1 | 4159720 | STAGE HELIX 16 1.4301 KIT | 1 |
| | | > MACH.STG-CASING-WOGV-WNR-M+16-304 | 1 |
| | | > IMPELLER-M+16-304 | 1 |
| 13.2 | 4159714 | STAGE BEARING HELIX 16 1.4301 KIT | 1 |
| | | > MACH.BEARING-STG-CASING-WNR-M+16-304 | 1 |
| | | > IMPELLER-M+16-304 | 1 |
| | | > SLEEVE-SPACER-Ø19,35x30,665-304 | 1 |
| | | > SHAFT-SLEEVE-D16xD20x18-CW | 1 |

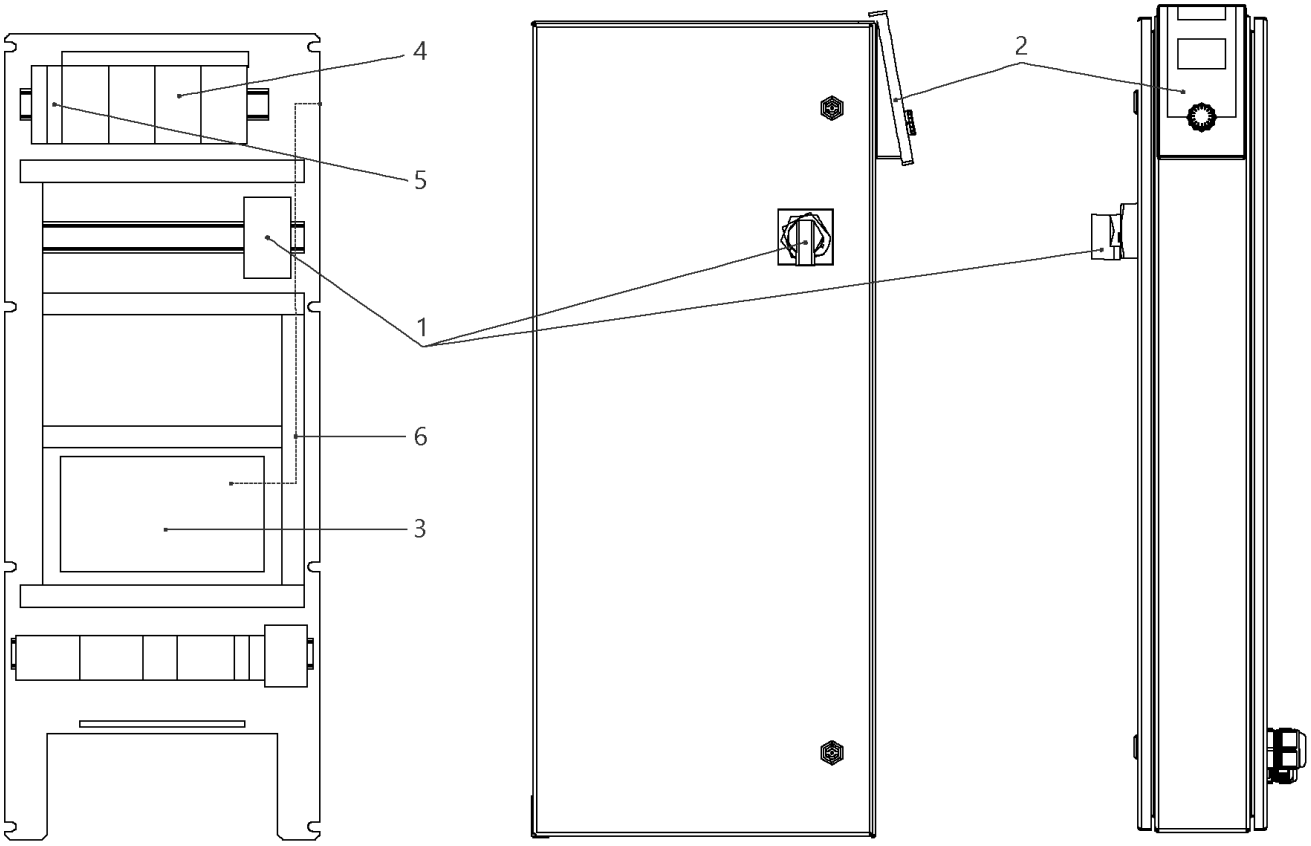
4
5
1
6
3
2

## W-CTRL-SCE-B-3x2,2KW-T4-FM-ND2

| Item | Article no. | Description | Quantity |
|---|---|---|---|
| 1 | 2104470 | MAIN SWITCH OT40F3 L250 KIT | 1 |
| 2 | 4184784 | CONTROL PANEL HMI SC KIT | 1 |
| 2 | 4185259 | ASSEMBLY DISPLAY SC PKG VP. | 1 |
| 3 | 4185257 | ASSEMBLY CPU SCe Booster VP. | 1 |
| 4 | 2051217 | AUTOM.CIRCUIT BREAKER S203 B16 TO7,5kW | 1 |
| 5 | 2046288 | CIRCUIT BREAKER S201 B16 | 1 |
| 6 | 4194956 | PATCH CABLE RJ45 CAT6 1,0M BLUE SC-PANEL | 1 |

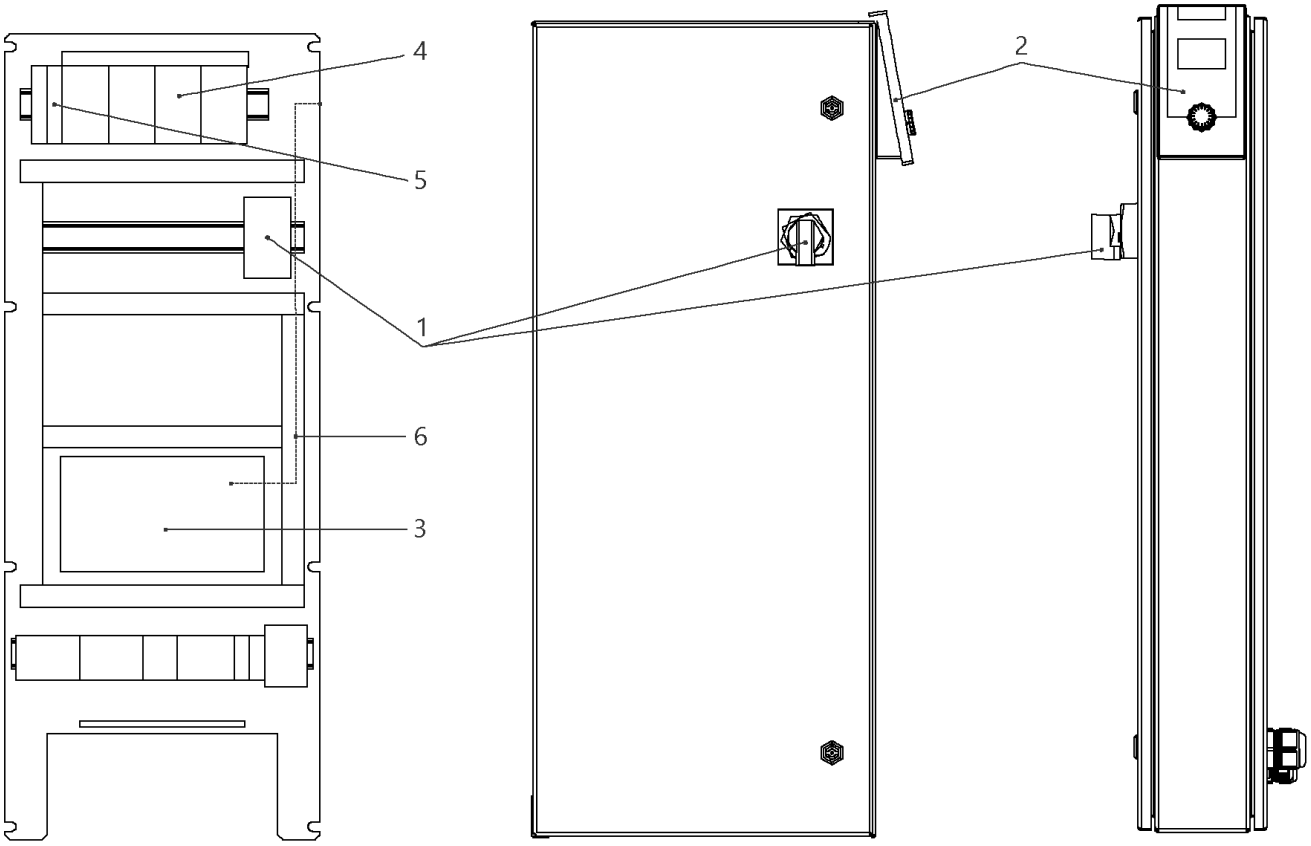
4
5
1
6
3
2

## W-CTRL-SCE-B-3x10A-T34-FM-ND2-AVC-PKG (2541902)

| Item | Article no. | Description | Quantity |
|---|---|---|---|
| 1 | 2104473 | MAIN SWITCH OT63F3 L105 KIT | 1 |
| Note: TO / BIS / JUSQU'AU 30/06/2015 | | | |
| 1 | 2104470 | MAIN SWITCH OT40F3 L250 KIT | 1 |
| Note: FROM / AB / À PARTIR DU 01/07/2015 | | | |
| 2 | 4184784 | CONTROL PANEL HMI SC KIT | 1 |
| 2 | 4185259 | ASSEMBLY DISPLAY SC PKG VP. | 1 |
| Note: DISPLAY ALONE / PLATINE SEULE | | | |
| 3 | 4185257 | ASSEMBLY CPU SCe Booster VP. | 1 |
| 4 | 2119861 | AUTOMATIC CIRCUIT BREAKER S203 B13 3POL. | 1 |
| 5 | 2046288 | CIRCUIT BREAKER S201 B16 | 1 |
| 6 | 4194956 | PATCH CABLE RJ45 CAT6 1,0M BLUE SC-PANEL | 1 |

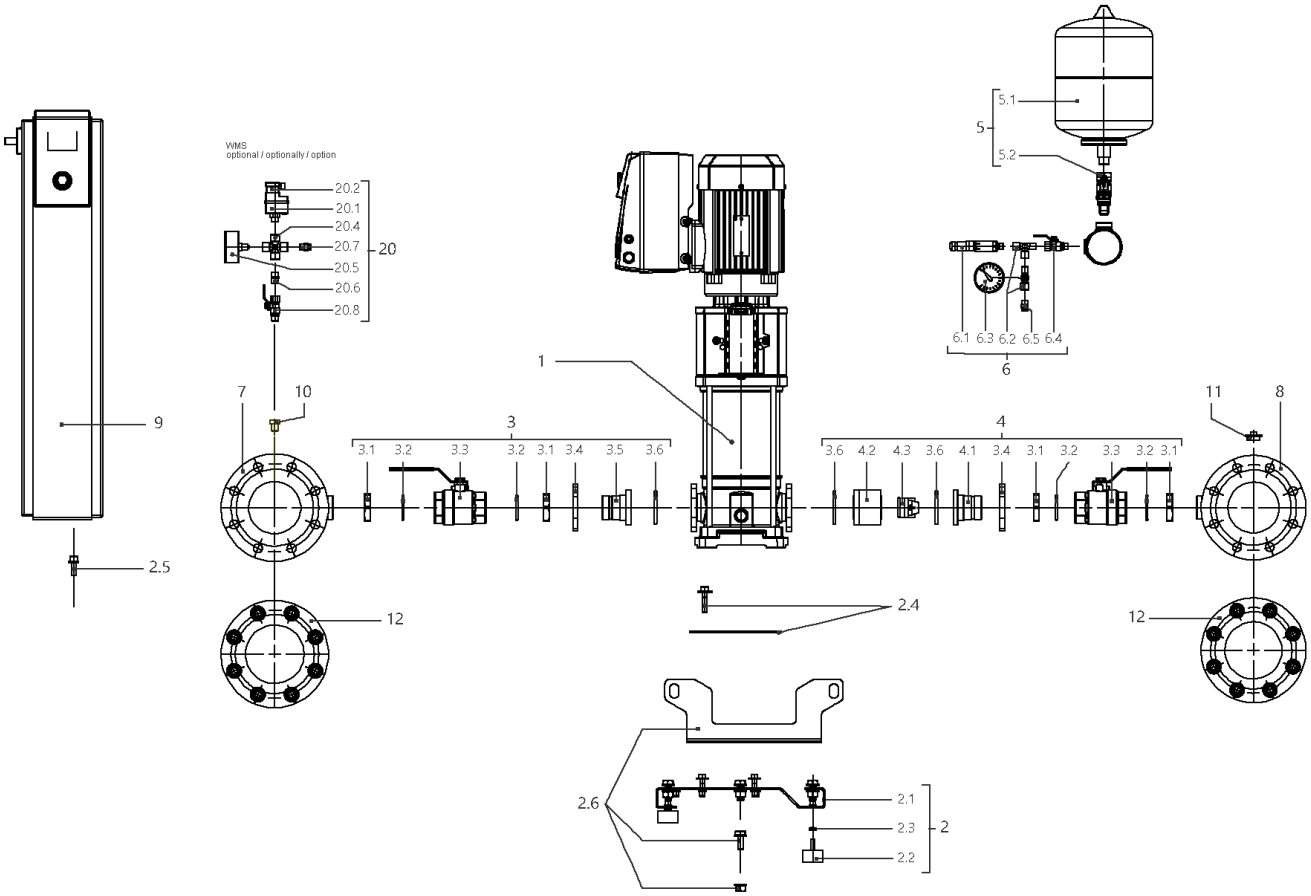
VIMS
optional / optionally / option
20.2
20.1
20.4
20.7
20.5
20.6
20.8
20
5.1
5
5.2
6.1 6.3 6.2 6.5 6.4
6
1
7
10
3
3.1 3.2 3.3 3.2 3.1 3.4 3.5 3.6
4
3.6 4.2 4.3 3.6 4.1 3.4 3.1 3.2 3.3 3.2 3.1
11
8
9
2.5
12
2.4
12
2.6
2.1
2.3
2
2.2

## SiBoost Smart 3HELIX VE1603/4kW (2536338)

| Item | Article no. | Description | Quantity |
|---|---|---|---|
| 1 | | HELIX VE1603-4.0-1/16/E/S | 1 |
| Note: TO / BIS / JUSQU'AU 30/04/2016 | | | |
| 1 | 4201561 | HELIX VE1603-4.0-1/16/E/S | 1 |
| Note: FROM / AB / À PARTIR DU 01/05/2016 | | | |
| 2 | 4197116 | BASE PLATE DE3 1150x420 KIT | 1 |
| 2.1 | | > BASEPLATE_3x4/6/10/16V_E300_BOX_150 | 1 |
| 2.2 | 2028654 | > VIBRATION DAMPER D.50X30 M10X28 | 1 |
| 2.3 | 2028281 | > NUT M10 DIN936 (ISO4035) 17H VZ | 1 |
| 2.4 | 4197083 | > HOLDER PUMP Helix 10/16 KIT | 1 |
| 2.5 | 4197084 | > HOLDER SWITCHBOX WILO Smart Control KIT | 1 |
| 2.6 | 4197117 | > LIFTING Siboost HELIX SC KIT | 1 |
| 3 | 4197072 | SUCTION SIDE Siboost Helix10/16 KIT | 1 |
| 3.1 | 2032623 | > NUT G1 1/2"SW55 MS | 1 |
| 3.2 | 2032616 | > O-RING ID.44X3,53N DIN3771 E7502 | 1 |
| 3.2 | 2534877 | > BALL TAP KDW40-H G11/2I-I-DN40 DVGW | 1 |
| 3.4 | 2032626 | > OVAL FLANGE D52-LK100 ST-VZ | 1 |
| 3.5 | 2032627 | > UNION INSERT DN40 LAPPED FLANGE | 1 |
| 3.6 | 2032628 | > O-RING ID.56,52X5,33N DIN3771 E7502 | 1 |
| 4 | 4197829 | DELIVERY SIDE Siboost Helix V16 KIT | 1 |
| 3.1 | 2032623 | > NUT G1 1/2"SW55 MS | 1 |
| 3.2 | 2032616 | > O-RING ID.44X3,53N DIN3771 E7502 | 1 |
| 3.3 | 2534877 | > BALL TAP KDW40-H G11/2I-I-DN40 DVGW | 1 |
| 3.4 | 2032626 | > OVAL FLANGE D52-LK100 ST-VZ | 1 |
| 4.1 | 2054274 | > UNION INSERT DN40 LAPPED FLANGE(W.COLLAR | 1 |
| 4.2 | 2054270 | > HOUSING RFV(RV-IN) DN50 MS VP. | 1 |
| 4.3 | 2028284 | > NON-RETURN DEVICE UNIT NV50/DN50 VP. | 1 |
| 3.6 | 2032628 | > O-RING ID.56,52X5,33N DIN3771 E7502 | 1 |
| 5 | 2032642 | DIAPHREM TANK 8L/PN16 DIN4807/T5 KIT | 1 |
| 5.1 | 2045914 | > DIAPHREM TANK 8L TYP-DD 16BAR | 1 |
| 5.2 | 2027853 | > FLOW FITTING G3/4 FOR DIAPHRAGM VES. | 1 |
| 6 | 4197076 | PRESSURE SENSOR/ GAUGE 0-16BAR KIT | 1 |
| 6.1 | 2085909 | > PRESS.SENSOR 1/4" 0-16BAR 4-20MA VP. | 1 |
| 6.2 | 4197077 | > T-PIECE 1/4" VP. | 1 |
| 6.3 | 2028692 | > PRESSURE GAUGE NG63-PN16-G1/4 | 1 |

| Item | Article no. | Description | Quantity |
|---|---|---|---|
| 6.4 | 2028291 | > BALL TAP R1/4" PN42 GIACOMINI R254DL | 1 |
| 6.5 | 2028691 | > BLOWGUN 1/4" MS 30BAR VP. | 1 |
| 7 | 4197833 | PIPE DE3 DN100-3x11/2"+2x1/4x900 VP. | 1 |
| 8 | 4197834 | PIPE DE3 DN100-3x11/2"+2x1/4+1x3/4x900VP | 1 |
| 9 | | W-CTRL-SCE-B-3x4,0KW-T4-FM-ND2 | 1 |
| Note: TO / BIS / JUSQU'AU 18/05/2014 | | | |
| 9 | 2541906 | W-CTRL-SCE-B-3x13A-T34-FM-ND2-AVC-PKG | 1 |
| Note: FROM / AB / À PARTIR DU 19/05/2014 | | | |
| 10 | 4197079 | PLUG G1/4"x10 AISI304 KIT | 1 |
| 11 | 2032654 | PLUG R3/4" MS VIEGA 1751 | 1 |
| 12 | 4197835 | BLIND-FLANGE DN100 PN16 -1.4404 KIT | 1 |
| | 2106342 | > FLAT GASKET D.120/162X2 DN100 C4430 VP. | 1 |
| | | > NUT M16 DIN934 A2 1.4301 | 1 |
| | | > SCREW M16x70 DIN933 A2 (8 PIECES) | 1 |
| | | > WASHER A17 DIN125 A2 | 1 |
| | | > FULL FLANGE ST.DN100 PN16 EN1092-1/05 A | 1 |
| | | > FLANGE COVER DN100 DIN 3443 FORM A | 1 |
| 20 | 2521150 | ASSEMBLY WMS. DE-EB. +VP | 1 |
| 20.1 | 2028652 | > PRESSURE SWITCH PS3-ASR 1/(1,3) VP. | 1 |
| 20.2 | 2130983 | > PLUG PS3-415 WITH KABEL 1,5M 2NO VP. | 1 |
| 20.4 | 2028290 | > CROSSPIECE R1/4" MS-NICKEL | 1 |
| 20.5 | 2028687 | > PRESSURE GAUGE NG63 R1/4" HI.0-6BAR | 1 |
| 20.6 | 2054268 | > DUAL NIPPLE G1/4" x G1/4" MS VP. | 1 |
| 20.7 | 2028691 | > BLOWGUN 1/4" MS 30BAR VP. | 1 |
| 20.8 | 2028291 | > BALL TAP R1/4" PN42 GIACOMINI R254DL | 1 |

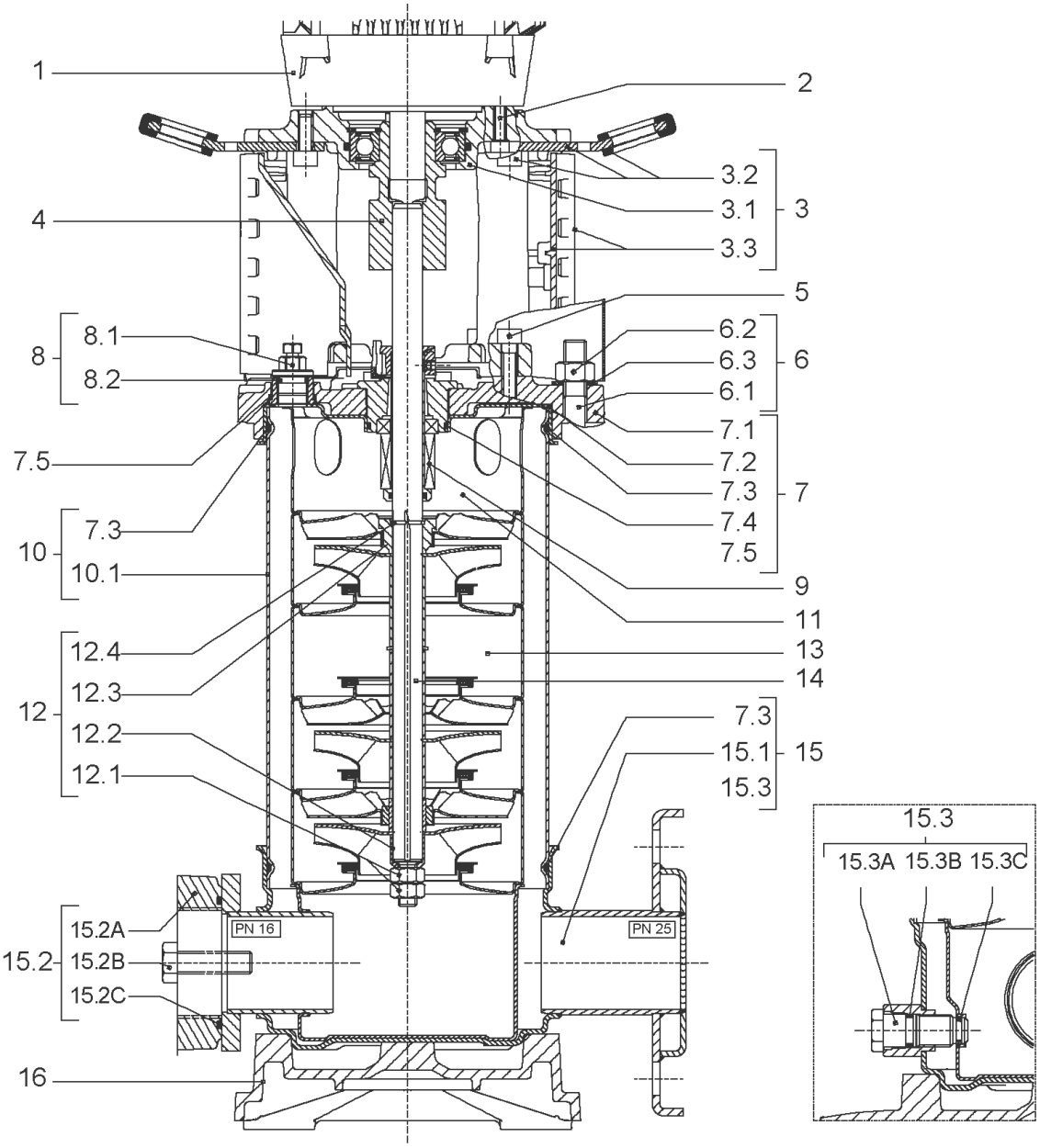
1
2
3.2
3.1
3
3.3
4
5
8.1
8
8.2
6.2
6.3
6
6.1
7.1
7.5
7.2
7.3
7
7.4
7.3
10
7.5
10.1
9
11
12.4
13
12.3
14
12
12.2
7.3
15.1
15
12.1
15.3
15.3
15.3A 15.3B 15.3C
15.2A
PN 16
PN 25
15.2
15.2B
15.2C
16

| Item | Article no. | Description | Quantity |
|---|---|---|---|
| 1 | | DRIVE HELIX-VE1603-IE2-ATB KIT | 1 |
| Note: MOTOR BRAND ATB | | | |
| 1 | | DRIVE HELIX-VE1603-IE2-WE KIT | 1 |
| Note: MOTOR BRAND WILO ELEC | | | |
| 1 | | DRIVE HELIX-VE1603-4T-IE4-WE-KIT | 1 |
| Note: MOTOR BRAND WILO ELEC | | | |
| 2 | 4159703 | SCREW M8X40 (4 PIECES) | 1 |
| 3 | 4172789 | LANTERN FT130 HELIX V10 KIT | 1 |
| 3.1 | | > M+5_6_LANTERN_ONE-PIECE_FT130_CATA | 1 |
| 3.2 | 2127604 | > EYELET CPL.FT HELIX(2 PIECES) | 1 |
| 3.3 | 4159692 | > COUPLING PROTECTOR FT HELIX KIT | 1 |
| 4 | 4159710 | COUPLING D.16XD.28 FT130 HELIX KIT | 1 |
| 5 | 4159707 | SCREW M8X30 (4 PIECES) | 1 |
| 6 | 4177817 | STUD BOLT M12X341 KIT | 1 |
| 6.1 | | > TIE BOLT M12-341x18x30-1.4057 | 1 |
| 6.2 | 2094647 | > NUT M12 M12 ISO4032 VP. | 1 |
| 6.3 | 2123557 | > WASHER CS-12.4-24-1.6-NFE25 (4 PIECES) | 1 |
| 7 | 4210143 | STATIONARY RING HOLDER HELIX 6" EPDM | 1 |
| 7.2 | 2127607 | > STATIONARY RING HOLDER 6" HELIX 1.4301 V | 1 |
| 7.3 | 4176513 | > O-RING FOR PUMP JACKET VP. | 1 |
| 7.4 | 2127603 | > O-RING ID.37,6x2,4 EPDM VP. | 1 |
| 7.5 | 2127602 | > O-RING ID.21,35x2 EPDM VP. | 1 |
| 8 | 4159686 | FILING/PURGING PLUG HELIX EPDM KIT | 1 |
| 9 | 4171327 | SEAL-KIT-HELIX6-10-16 O/E KIT | 1 |
| 10 | 2127575 | HOUSING PIPE D.152x210 1.4301 KIT | 1 |
| 11 | 2127588 | CENTERING STAGE-RETURN HELIX16 1.4301 VP | 1 |
| 12 | 4209329 | SHAFT EQUIPMENT HELIX V16 KIT | 1 |
| 12.1 | | > NUT-H-M10-A4.70 | 1 |
| 12.2 | | > SERRATED LOCK WASHER M+16M3-316L | 1 |
| 12.3 | | > IMPELLER STOP RING L35,9-304 | 1 |
| 12.4 | | > STOP-RUSH-1/2-D16xd2-M+316 | 1 |
| 13 | | HYDRAULIC HELIX V 1603 1.4307 | 1 |
| 14 | 2127564 | SHAFT D.16X330 1.4301 VP. | 1 |
| 15 | 4217899 | PUMP HOUSING HELIX DN50 PN16 1.4301 KIT | 1 |

| Item | Article no. | Description | Quantity |
|---|---|---|---|
| 7.3 | 4176513 | > O-RING FOR PUMP JACKET VP. | 1 |
| 15.1 | | > BLASTING PPE HOUSING V-PN16-DN50-304 | 1 |
| 15.2 | 4217895 | > COUNTER FLANGE-G2"-PN16-GJL KIT | 1 |
| 15.3 | 4171321 | > PRIMING/DRAIN PLUG EPDM HELIX KIT | 1 |
| 16 | 2127601 | BASEPLATE HELIX V16 VP. | 1 |

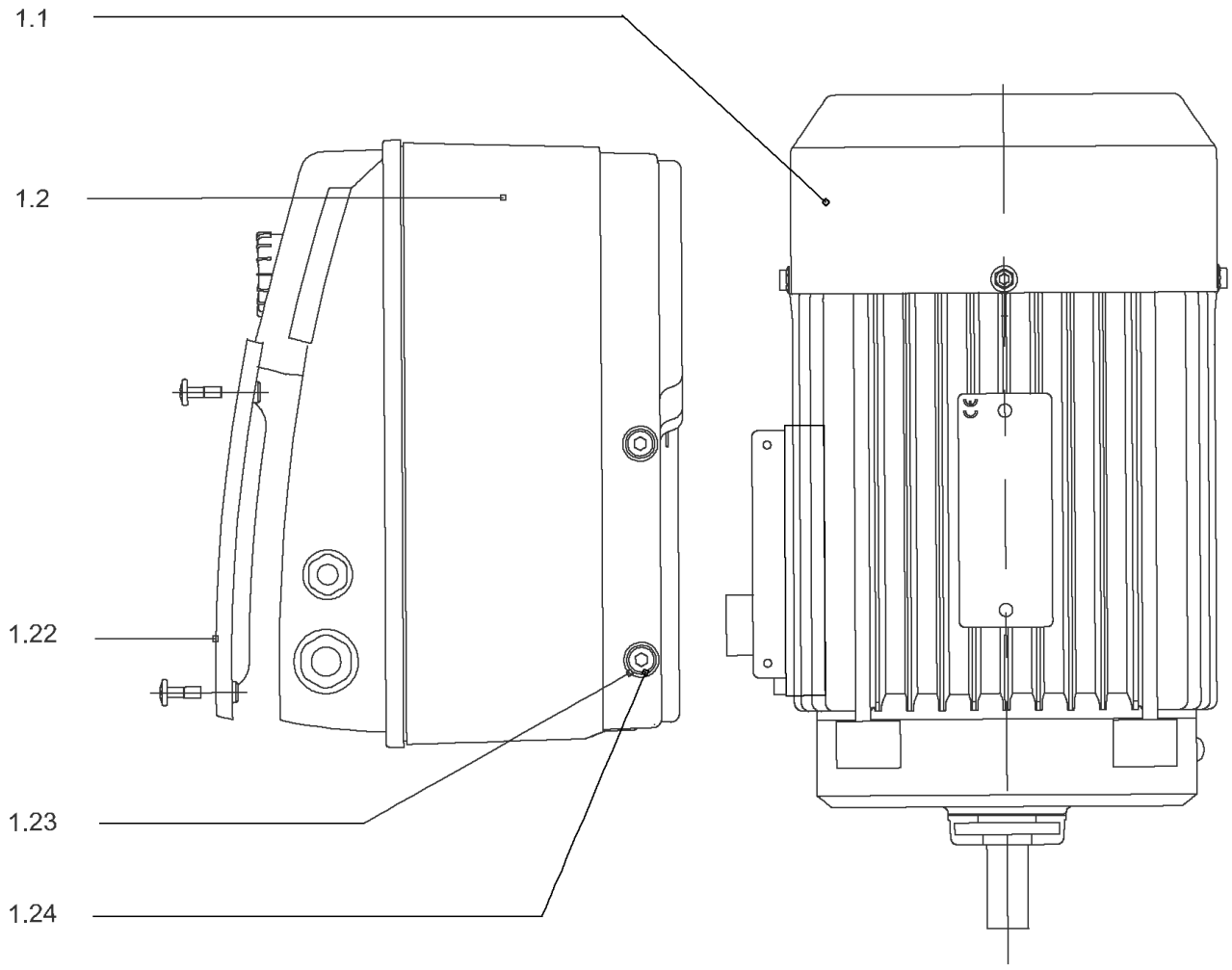
1.1
1.2
1.22
1.23
1.24

## DRIVE HELIX-VE1603-IE2-ATB KIT

| Item | Article no. | Description | Quantity |
|---|---|---|---|
| 1.1 | | MOTOR 4/2/112 3~ 380V 60HZ IE2 ATB VP. | 1 |
| Note: no longer available /nicht mehrlieferbarn'est plus disponible | | | |
| | | SPARE PARTS MOTOR:ON REQUEST | 1 |
| 1.2 | 4179126 | MODULE HELIX-VE1603-IE2-ATB KIT | 1 |
| 1.22 | 2054227 | > MODULE COVER/GASKET TL3/4 KIT | 1 |
| 1.23 | 4215716 | > SCREW M5X16 DIN912 8.8 A2A (4pieces) VP. | 1 |
| 1.24 | 2057978 | > RONDELLE A5,3 DIN6797 FST ZN (4 PIECES) | 1 |

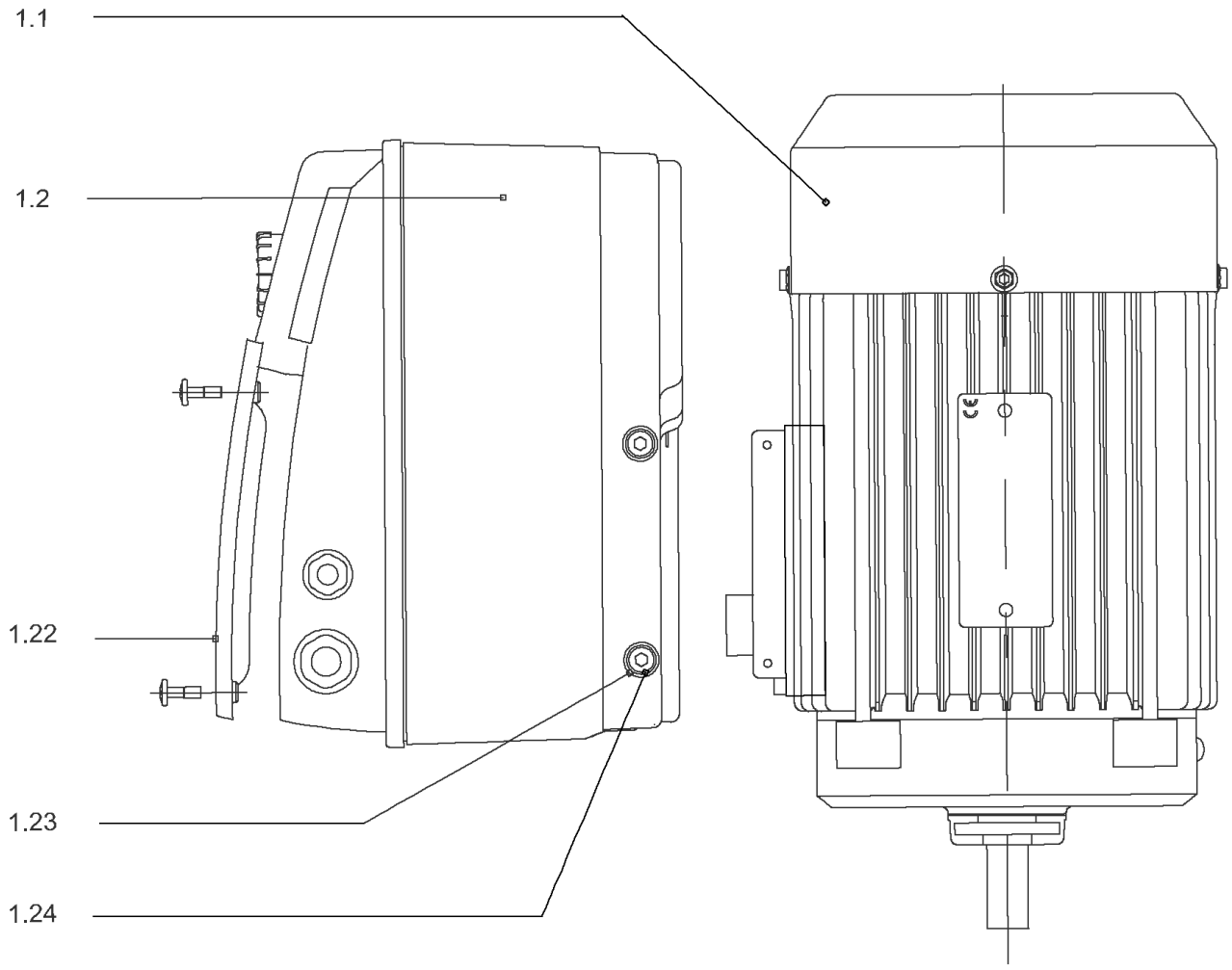
1.1
1.2
1.22
1.23
1.24

## DRIVE HELIX-VE1603-IE2-WE KIT

| Item | Article no. | Description | Quantity |
|---|---|---|---|
| 1.1 | 4188824 | MO.4/2/112 3~380V 60Hz IE2 WE VP. | 1 |
| | | SPARE PARTS MOTOR:ON REQUEST | 1 |
| 1.2 | 4188825 | MODULE HELIX-VE1603-4.0-IE2-WE KIT | 1 |
| 1.22 | 2054227 | > MODULE COVER/GASKET TL3/4 KIT | 1 |
| 1.23 | 4215716 | > SCREW M5X16 DIN912 8.8 A2A (4pieces) VP. | 1 |
| 1.24 | 2057978 | > RONDELLE A5,3 DIN6797 FST ZN (4 PIECES) | 1 |

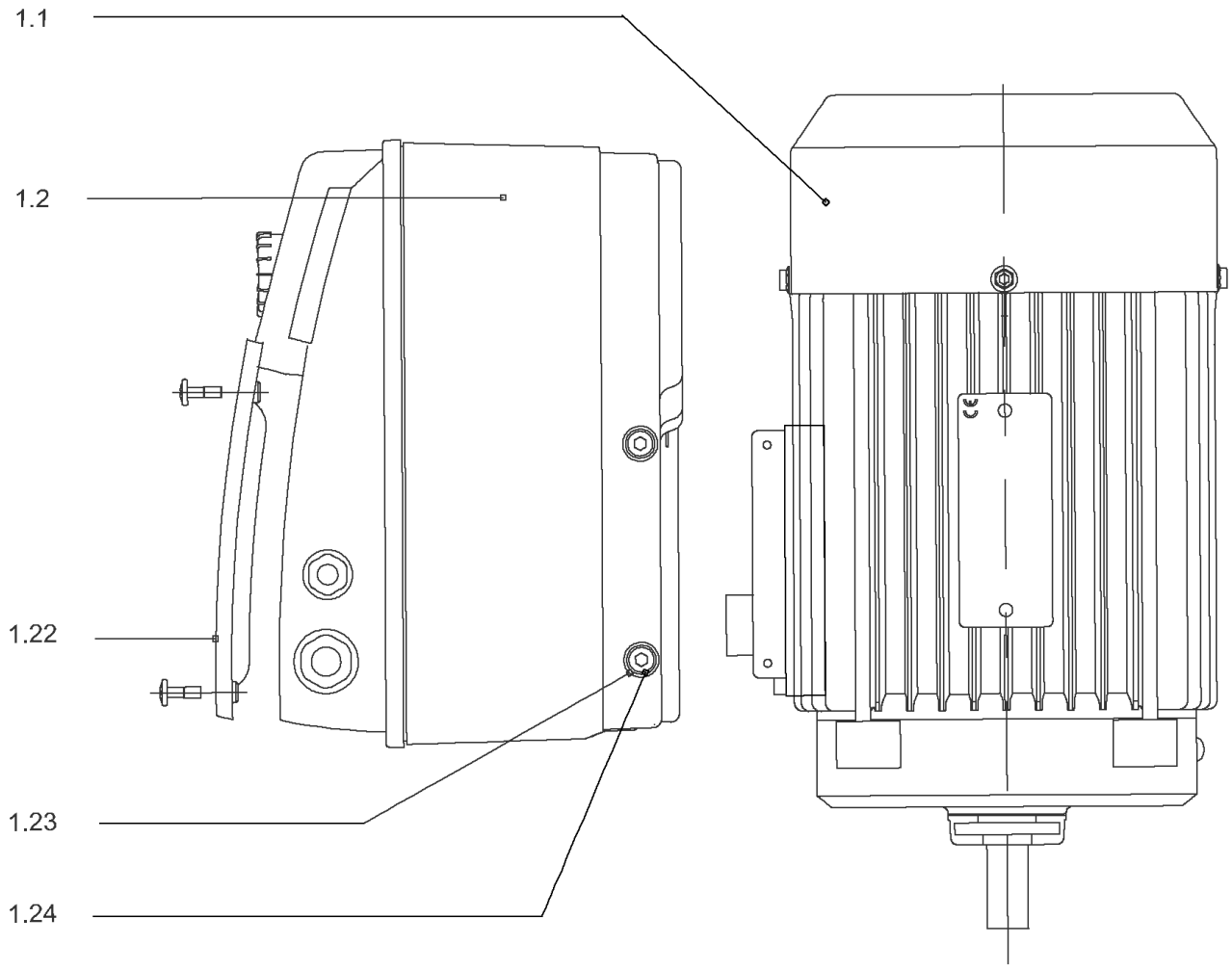
1.1
1.2
1.22
1.23
1.24

## DRIVE HELIX-VE1603-4T-IE4-WE-KIT

| Item | Article no. | Description | Quantity |
|---|---|---|---|
| 1.1 | 4207924 | MOTOR 4/2/112 3~ 380V 60HZ IE4 WE VP. | 1 |
| | | SPARE PARTS MOTOR:ON REQUEST | 1 |
| 1.2 | 4209607 | MODULE HELIX-VE1603-4.0-IE4-WE KIT | 1 |
| 1.22 | 2054227 | > MODULE COVER/GASKET TL3/4 KIT | 1 |
| 1.23 | 4215716 | > SCREW M5X16 DIN912 8.8 A2A (4pieces) VP. | 1 |
| 1.24 | 2057978 | > RONDELLE A5,3 DIN6797 FST ZN (4 PIECES) | 1 |

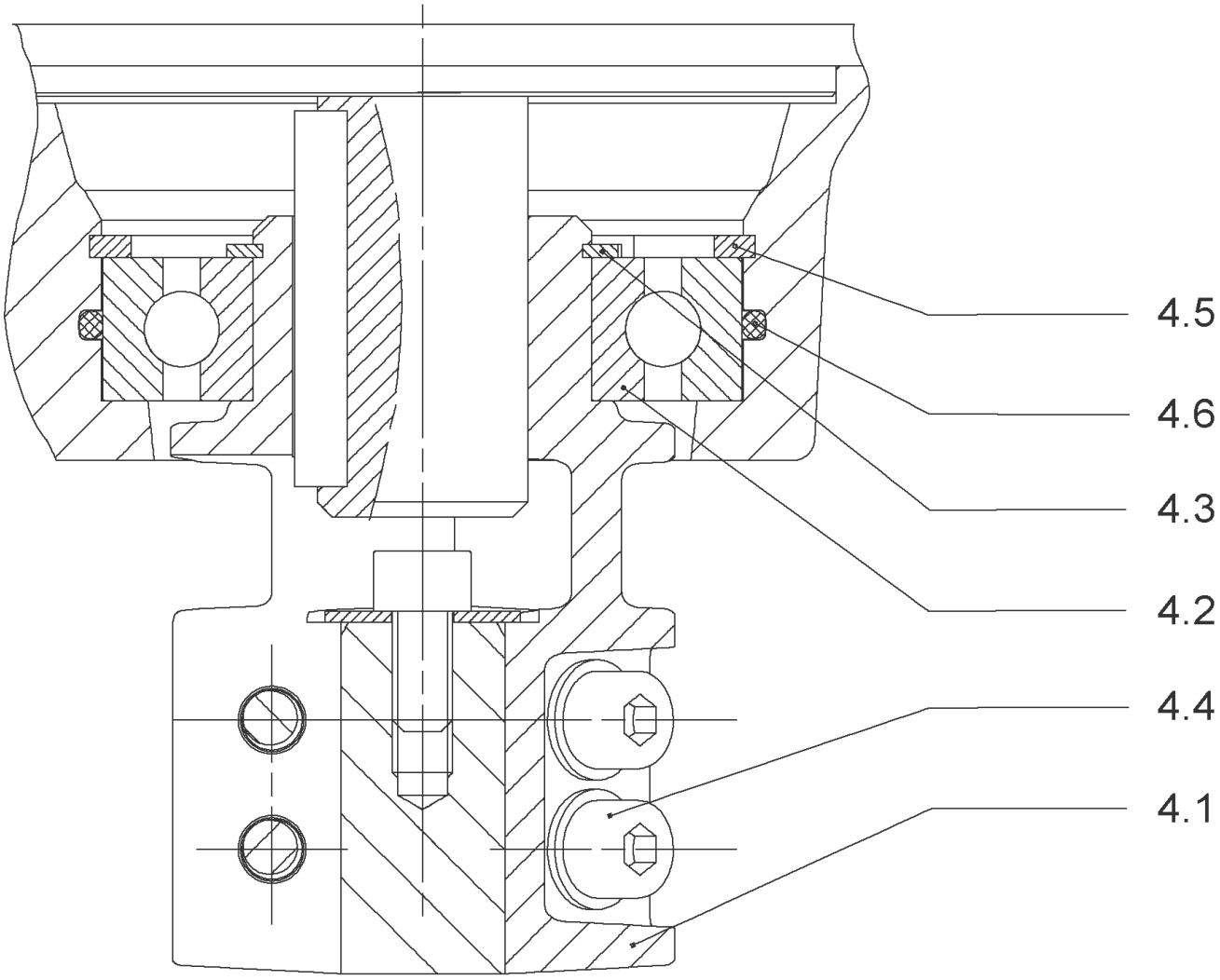
4.5
4.6
4.3
4.2
4.4
4.1

## COUPLING D.16XD.28 FT130 HELIX KIT (4159710)

| Item | Article no. | Description | Quantity |
|---|---|---|---|
| 4.1 | | COUPLING M+ Ø16XØ28 FT130 MACHINED | 1 |
| 4.2 | 2131022 | BALL BEARING 6209/ZZ-C3(HT)VP. | 1 |
| 4.3 | 4233930 | CIRCLIP-FOR-BORES-D45x1,75 VP. | 1 |
| 4.4 | 4157726 | SCREW KIT M8X30 (4 PIECES) | 1 |
| 4.5 | 4234252 | CIRCLIPS 85X3 VP. | 1 |
| 4.6 | 4234243 | O-RING 85X3 VP. | 1 |
| | | NOMEL CONTACT WASHER 8x16x1,4 STEEL ZC | 1 |

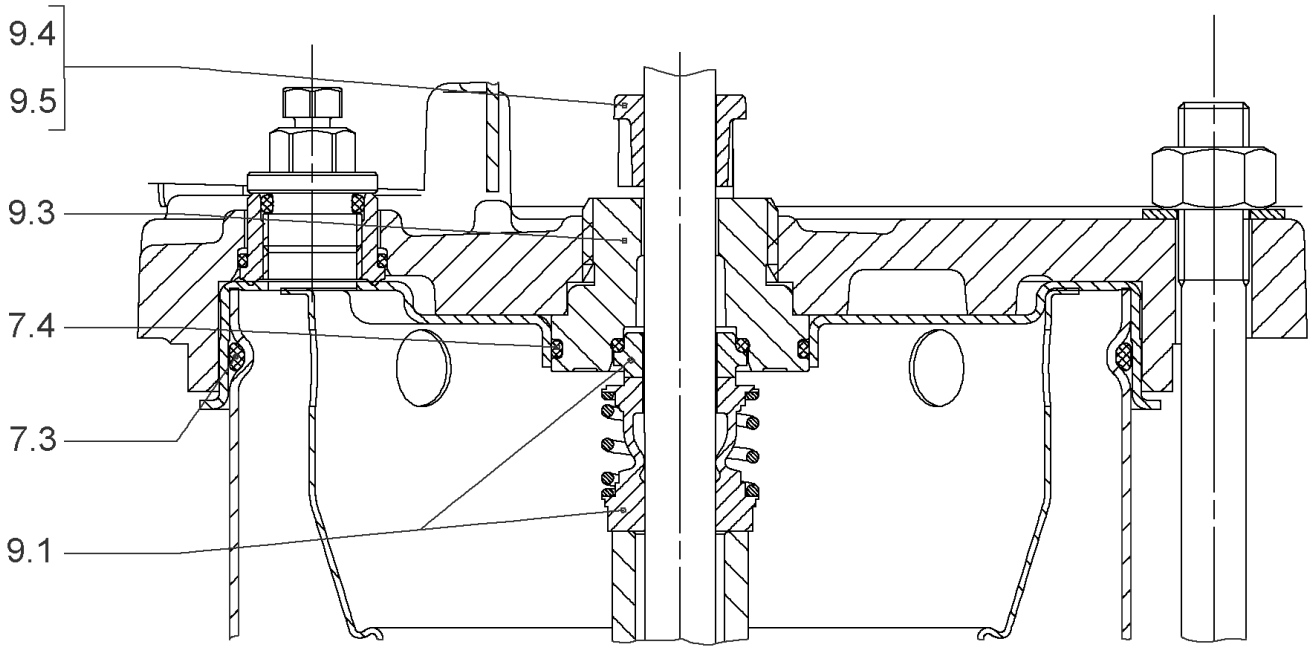
9.4
9.5
9.3
7.4
7.3
9.1

## SEAL-KIT-HELIX6-10-16 O/E KIT (4171327)

| Item | Article no. | Description | Quantity |
|---|---|---|---|
| 7.3 | 4176513 | O-RING FOR PUMP JACKET VP. | 1 |
| 7.4 | 2127603 | O-RING ID.37,6x2,4 EPDM VP. | 1 |
| 9.1 | 4177801 | MECH.SEAL HELIX6-10-16 O/E VP. | 1 |
| 9.3 | 4177798 | MACHINED RING HOLDER M+6" Ø16 304 VP. | 1 |
| 9.5 | 4177799 | MACHINED DRIVE RING Ø16 VP. | 1 |
| 9.4 | 4176520 | SCREW CH M5x5 A4-70 ( 3PIECES ) | 1 |

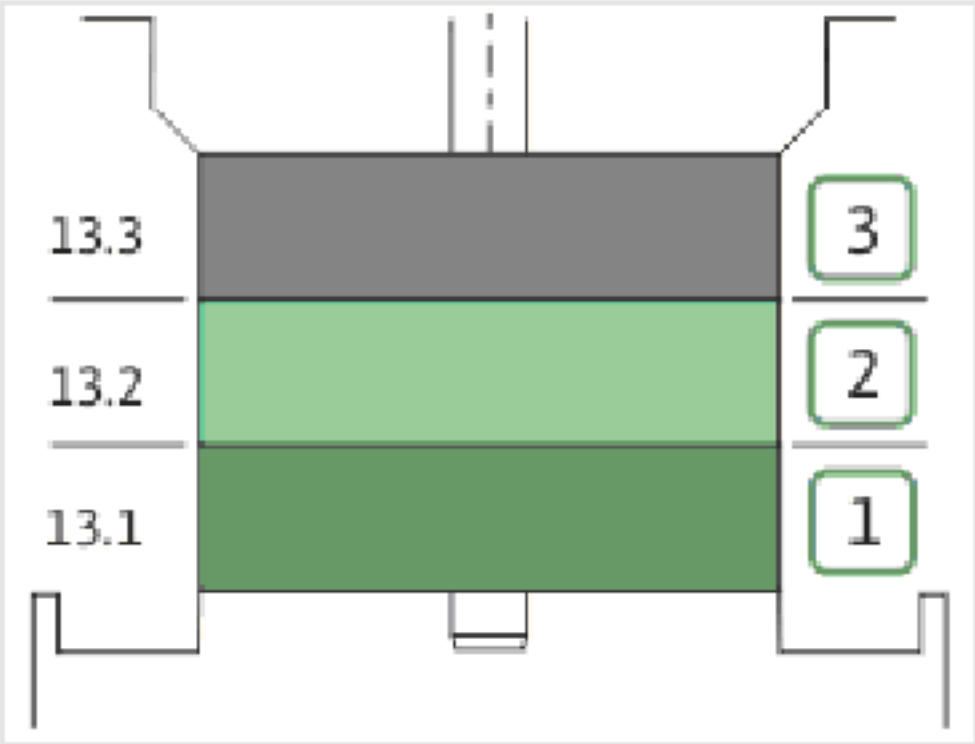
13.3
13.2
13.1
3
2
1

| Item | Article no. | Description | Quantity |
|---|---|---|---|
| 13.1 | 4159720 | STAGE HELIX 16 1.4301 KIT | 1 |
| | | > MACH.STG-CASING-WOGV-WNR-M+16-304 | 1 |
| | | > IMPELLER-M+16-304 | 1 |
| 13.2 | 4159714 | STAGE BEARING HELIX 16 1.4301 KIT | 1 |
| | | > MACH.BEARING-STG-CASING-WNR-M+16-304 | 1 |
| | | > IMPELLER-M+16-304 | 1 |
| | | > SLEEVE-SPACER-Ø19,35x30,665-304 | 1 |
| | | > SHAFT-SLEEVE-D16xD20x18-CW | 1 |
| 13.3 | 4159715 | INTERMEDIATE STAGE HELIX 16 1.4301 KIT | 1 |
| | | > CORPS-ETG-STD-ACR-AJR-USIN.M+16-304 | 1 |
| | | > IMPELLER-M+16-304 | 1 |
| | | > SPACER Ø16X19.4-L48.6-304 | 1 |

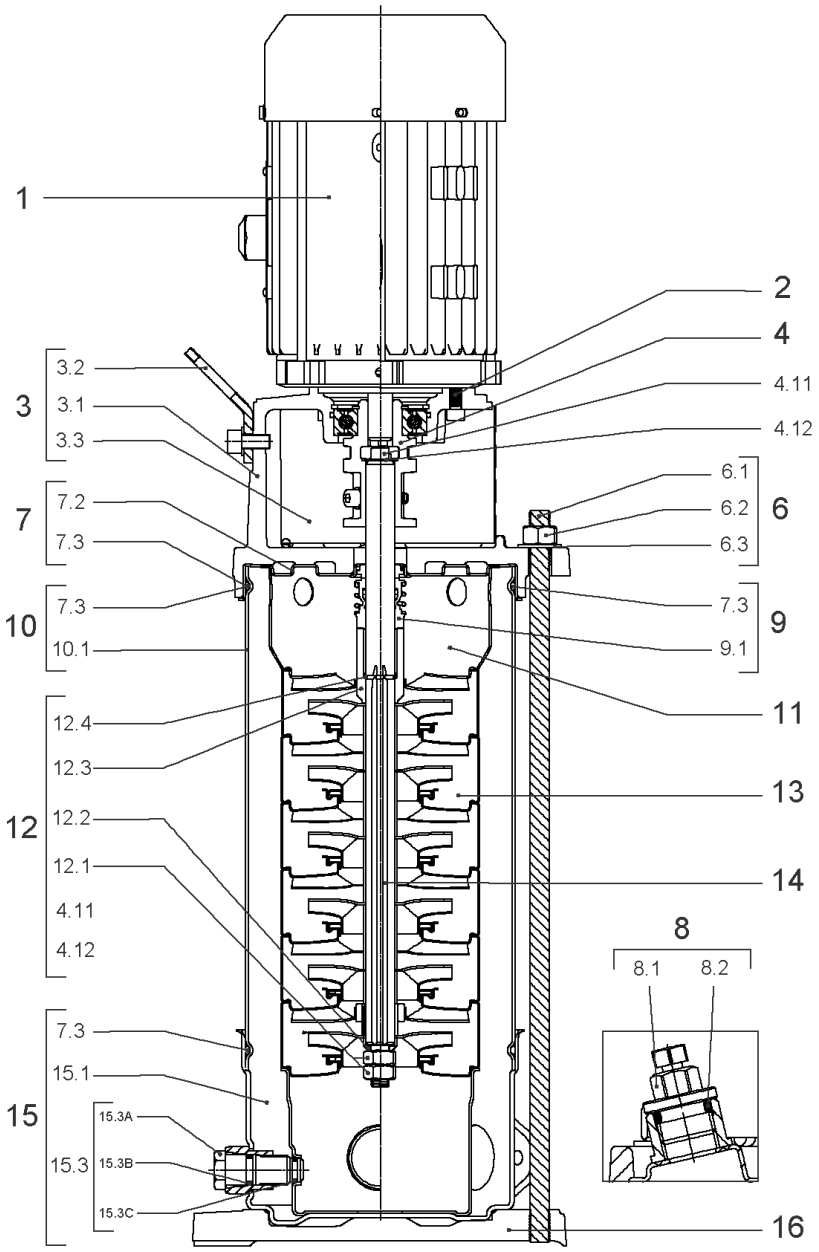
1
2
4
4.11
4.12
3
3.2
3.1
3.3
7
7.2
7.3
10
7.3
10.1
6
6.1
6.2
6.3
9
7.3
9.1
11
12
12.4
12.3
12.2
12.1
4.11
4.12
13
14
8
8.1
8.2
15
7.3
15.1
15.3
15.3A
15.3B
15.3C
16

## HELIX VE1603-4.0-1/16/E/S (4201561)

| Item | Article no. | Description | Quantity |
|---|---|---|---|
| 1 | | DRIVE HELIX-VE1603-4T-IE4-WE-KIT | 1 |
| Note: MOTOR BRAND WILO ELEC | | | |
| | | SPARE PARTS MOTOR:ON REQUEST | 1 |
| 2 | 4159707 | SCREW M8X30 (4 PIECES) | 1 |
| 3 | 4214473 | LANTERN FT130 HELIX KIT | 1 |
| 3.1 | | > LANT-MOT-VMI-ReDTC6"-FT130-MACHINED+CATA | 1 |
| 3.2 | 4184852 | > EYELET CPL.FT HELIX (2 PIECES) | 1 |
| 3.3 | 4213782 | > COUPLING PROTECTOR FT115/130 HELIX KIT | 1 |
| 4 | 4159710 | COUPLING D.16XD.28 FT130 HELIX KIT | 1 |
| 6 | 2127553 | STUD BOLT M12X341 KIT | 1 |
| 7 | 4214481 | STATIONARY RING HOLDER HELIX D27 ReDTC | 1 |
| 7.2 | 4214479 | > STATIONARY RING HOLDER HELIX D27 VP. | 1 |
| 7.3 | 4176513 | > O-RING FOR PUMP JACKET VP. | 1 |
| 8 | 4212724 | FILING/PURGING PLUG HELIX ReDTC KIT | 1 |
| 8.1 | | > FILLING PLUG MVI6"-304 | 1 |
| 8.2 | 4177800 | > O-RING EPDM PLUG HELIX VP. | 1 |
| 9 | 4214483 | MECH.SEAL HELIX6-10-16 O/E ReDTC KIT | 1 |
| 9.1 | 4177801 | > MECH.SEAL HELIX6-10-16 O/E VP. | 1 |
| 7.3 | 4176513 | > O-RING FOR PUMP JACKET VP. | 1 |
| 10 | 2127575 | HOUSING PIPE D.152x210 1.4301 KIT | 1 |
| 11 | 2127588 | CENTERING STAGE-RETURN HELIX16 1.4301 VP | 1 |
| 12 | 4214520 | SHAFT EQUIPMENT HELIX V16 ReDTC KIT | 1 |
| 12.1 | | > NUT-H-M10-A4.70 | 1 |
| 12.2 | | > SERRATED LOCK WASHER M+16M3-316L | 1 |
| 12.3 | | > 1/2-SNAP-RING-16M3-316L | 1 |
| 12.4 | | > STOP-RUSH-1/2-D16xd2-M+316 | 1 |
| 4.11 | | > SCREW CHC-M6X14-8.8-ISO4762-GEOMET500A | 1 |
| 4.12 | | > WASHER D.24 L6U ZINK | 1 |
| 13 | | HYDRAULIC HELIX V 1603 1.4307 | 1 |
| 14 | 4214495 | SHAFT D.16X278 HELIX 1.4057 VP. | 1 |
| 15 | 4217899 | PUMP HOUSING HELIX DN50 PN16 1.4301 KIT | 1 |
| 7.3 | 4176513 | > O-RING FOR PUMP JACKET VP. | 1 |
| 15.1 | | > BLASTING PPE HOUSING V-PN16-DN50-304 | 1 |
| 15.2 | 4217895 | > COUNTER FLANGE-G2"-PN16-GJL KIT | 1 |

| Item | Article no. | Description | Quantity |
|---|---|---|---|
| 15.3 | 4171321 | > PRIMING/DRAIN PLUG EPDM HELIX KIT | 1 |
| 16 | 2127601 | BASEPLATE HELIX V16 VP. | 1 |

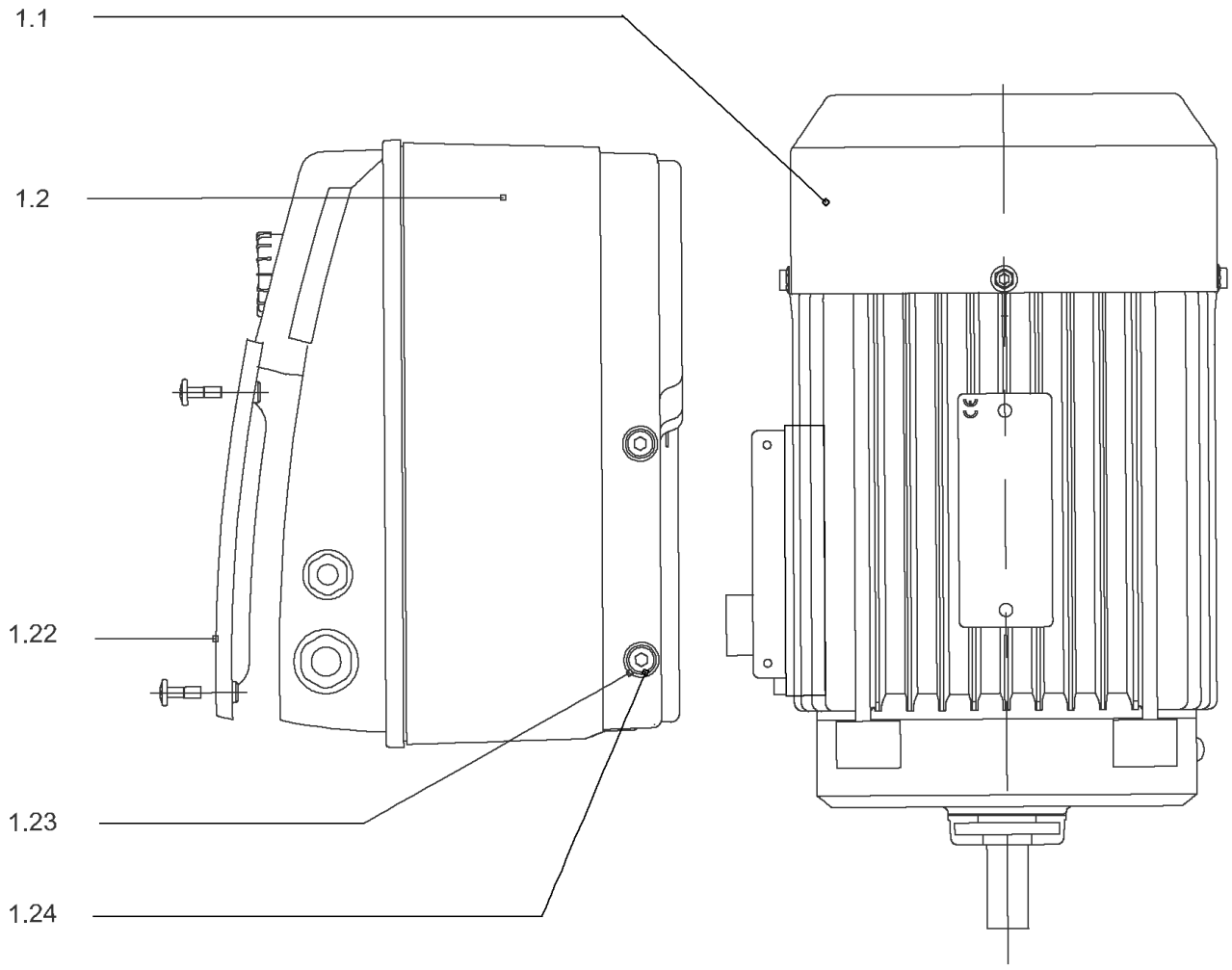
1.1
1.2
1.22
1.23
1.24

## DRIVE HELIX-VE1603-4T-IE4-WE-KIT

| Item | Article no. | Description | Quantity |
|---|---|---|---|
| 1.1 | 4207924 | MOTOR 4/2/112 3~ 380V 60HZ IE4 WE VP. | 1 |
| | | SPARE PARTS MOTOR:ON REQUEST | 1 |
| 1.2 | 4209607 | MODULE HELIX-VE1603-4.0-IE4-WE KIT | 1 |
| 1.22 | 2054227 | > MODULE COVER/GASKET TL3/4 KIT | 1 |
| 1.23 | 4215716 | > SCREW M5X16 DIN912 8.8 A2A (4pieces) VP. | 1 |
| 1.24 | 2057978 | > RONDELLE A5,3 DIN6797 FST ZN (4 PIECES) | 1 |

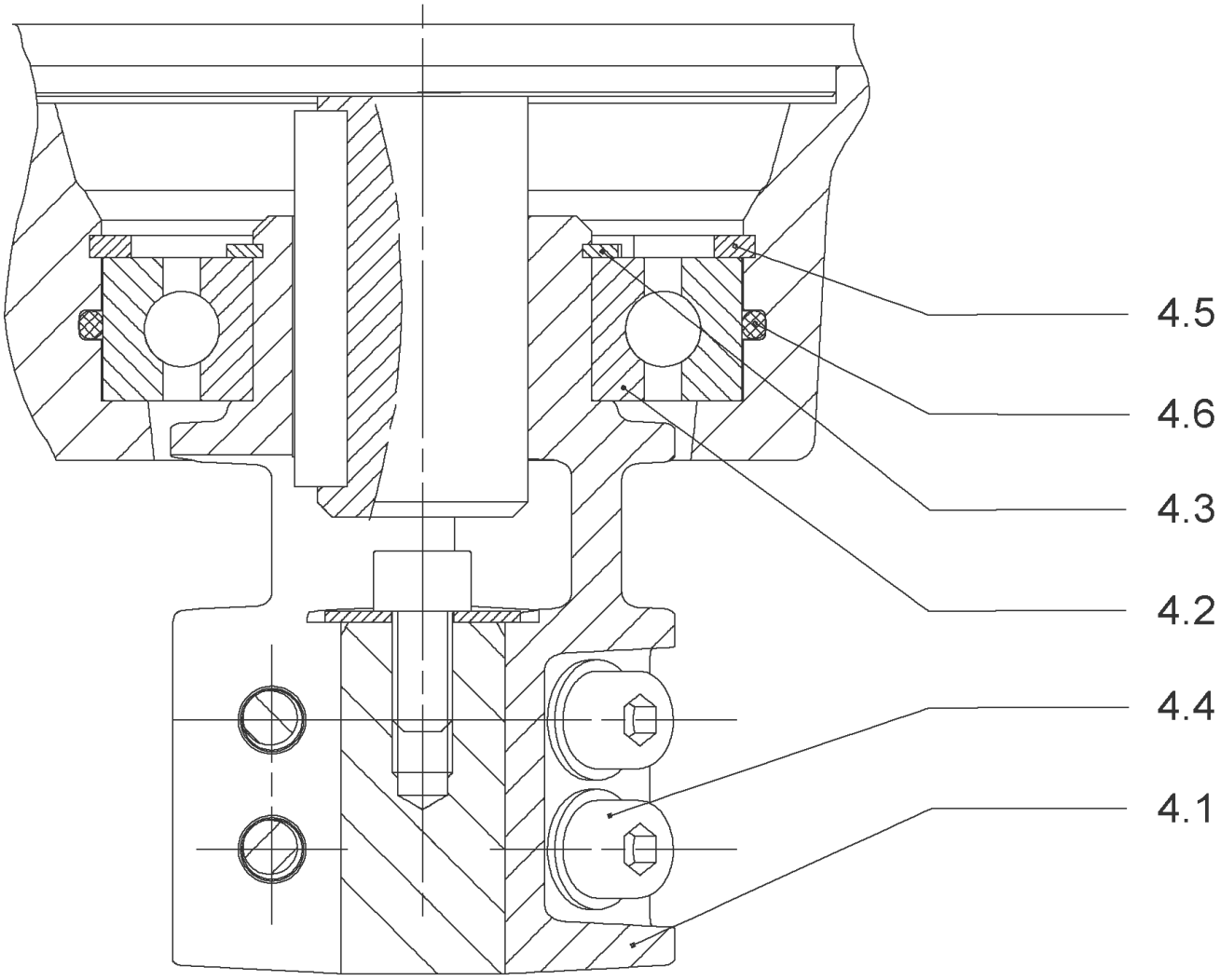
4.5
4.6
4.3
4.2
4.4
4.1

## COUPLING D.16XD.28 FT130 HELIX KIT (4159710)

| Item | Article no. | Description | Quantity |
|---|---|---|---|
| 4.1 | | COUPLING M+ Ø16XØ28 FT130 MACHINED | 1 |
| 4.2 | 2131022 | BALL BEARING 6209/ZZ-C3(HT)VP. | 1 |
| 4.3 | 4233930 | CIRCLIP-FOR-BORES-D45x1,75 VP. | 1 |
| 4.4 | 4157726 | SCREW KIT M8X30 (4 PIECES) | 1 |
| 4.5 | 4234252 | CIRCLIPS 85X3 VP. | 1 |
| 4.6 | 4234243 | O-RING 85X3 VP. | 1 |
| | | NOMEL CONTACT WASHER 8x16x1,4 STEEL ZC | 1 |

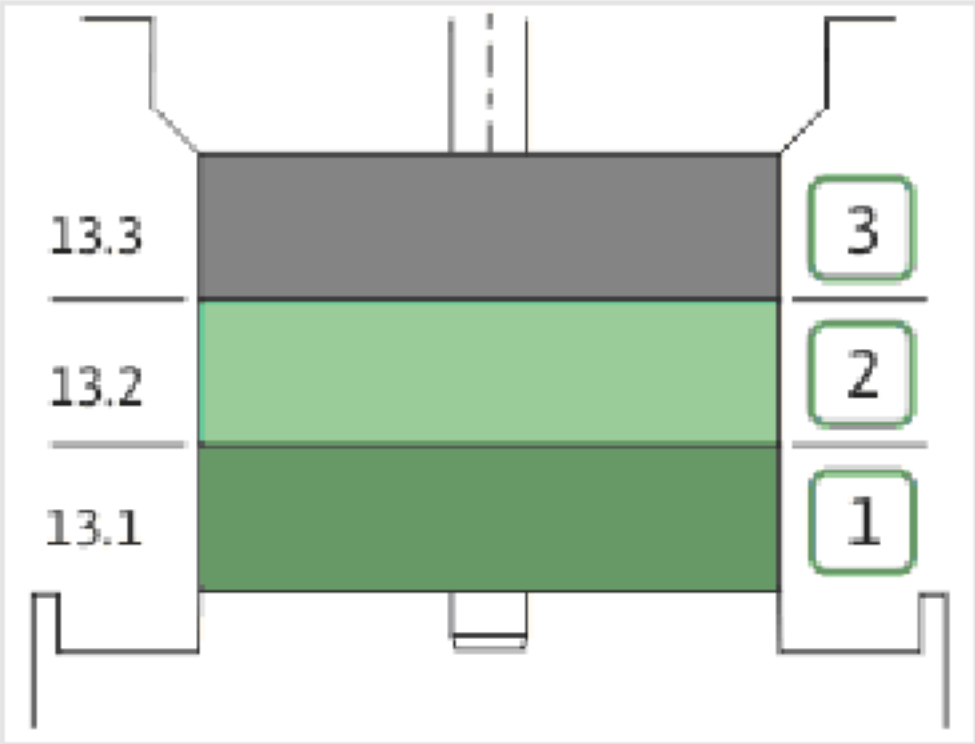
13.3
13.2
13.1
3
2
1

| Item | Article no. | Description | Quantity |
|---|---|---|---|
| 13.1 | 4159720 | STAGE HELIX 16 1.4301 KIT | 1 |
| | | > MACH.STG-CASING-WOGV-WNR-M+16-304 | 1 |
| | | > IMPELLER-M+16-304 | 1 |
| 13.2 | 4159714 | STAGE BEARING HELIX 16 1.4301 KIT | 1 |
| | | > MACH.BEARING-STG-CASING-WNR-M+16-304 | 1 |
| | | > IMPELLER-M+16-304 | 1 |
| | | > SLEEVE-SPACER-Ø19,35x30,665-304 | 1 |
| | | > SHAFT-SLEEVE-D16xD20x18-CW | 1 |
| 13.3 | 4159715 | INTERMEDIATE STAGE HELIX 16 1.4301 KIT | 1 |
| | | > CORPS-ETG-STD-ACR-AJR-USIN.M+16-304 | 1 |
| | | > IMPELLER-M+16-304 | 1 |
| | | > SPACER Ø16X19.4-L48.6-304 | 1 |

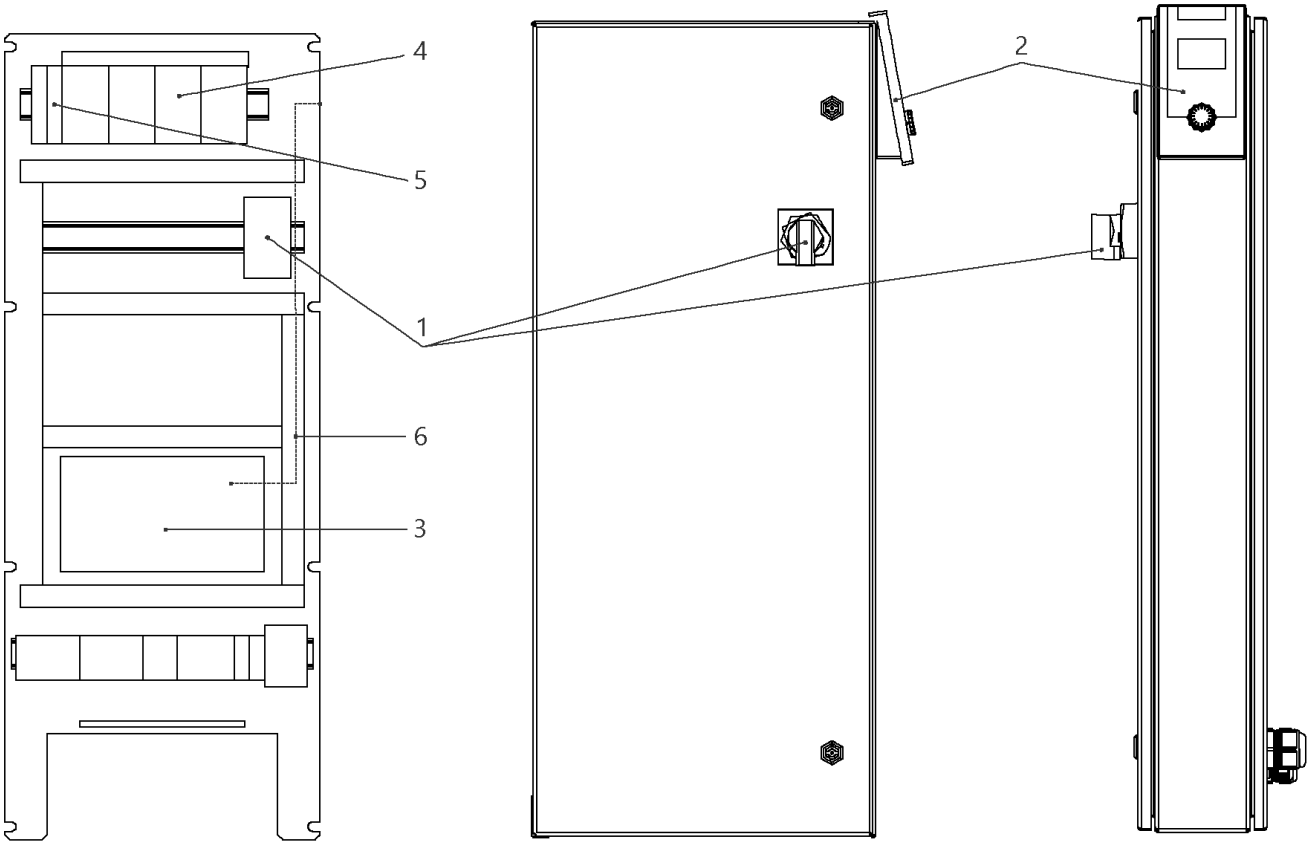
4
5
1
6
3
2

## W-CTRL-SCE-B-3x4,0KW-T4-FM-ND2

| Item | Article no. | Description | Quantity |
|---|---|---|---|
| 1 | 2104473 | MAIN SWITCH OT63F3 L105 KIT | 1 |
| 2 | 4184784 | CONTROL PANEL HMI SC KIT | 1 |
| 2 | 4185259 | ASSEMBLY DISPLAY SC PKG VP. | 1 |
| 3 | 4185257 | ASSEMBLY CPU SCe Booster VP. | 1 |
| 4 | 2051217 | AUTOM.CIRCUIT BREAKER S203 B16 TO7,5kW | 1 |
| 5 | 2046288 | CIRCUIT BREAKER S201 B16 | 1 |
| 6 | 4194956 | PATCH CABLE RJ45 CAT6 1,0M BLUE SC-PANEL | 1 |

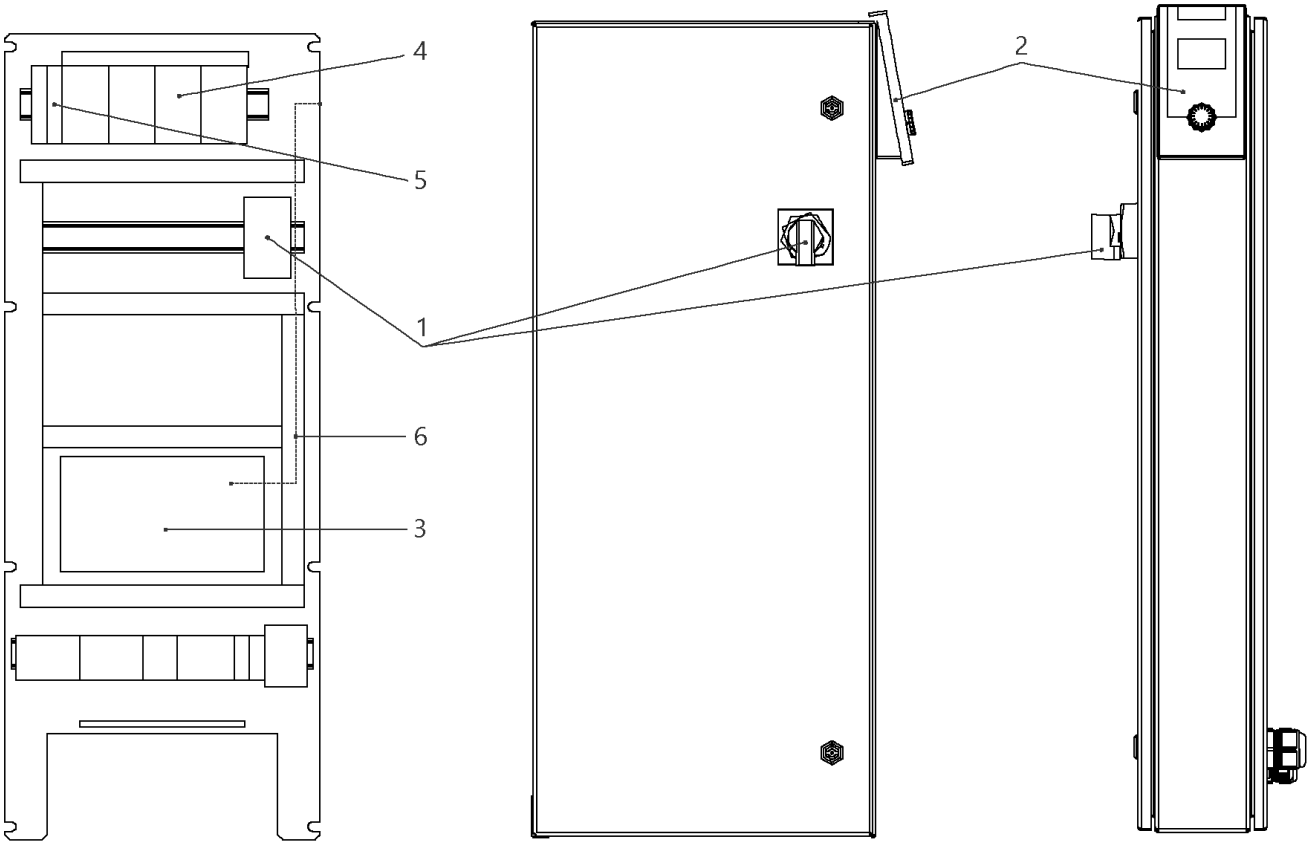
4
5
1
6
3
2

## W-CTRL-SCE-B-3x13A-T34-FM-ND2-AVC-PKG (2541906)

| Item | Article no. | Description | Quantity |
|---|---|---|---|
| 1 | 2104473 | MAIN SWITCH OT63F3 L105 KIT | 1 |
| 2 | 4184784 | CONTROL PANEL HMI SC KIT | 1 |
| 2 | 4185259 | ASSEMBLY DISPLAY SC PKG VP. | 1 |
| Note: DISPLAY ALONE / PLATINE SEULE | | | |
| 3 | 4185257 | ASSEMBLY CPU SCe Booster VP. | 1 |
| 4 | 2051217 | AUTOM.CIRCUIT BREAKER S203 B16 TO7,5kW | 1 |
| 5 | 2046288 | CIRCUIT BREAKER S201 B16 | 1 |
| 6 | 4194956 | PATCH CABLE RJ45 CAT6 1,0M BLUE SC-PANEL | 1 |

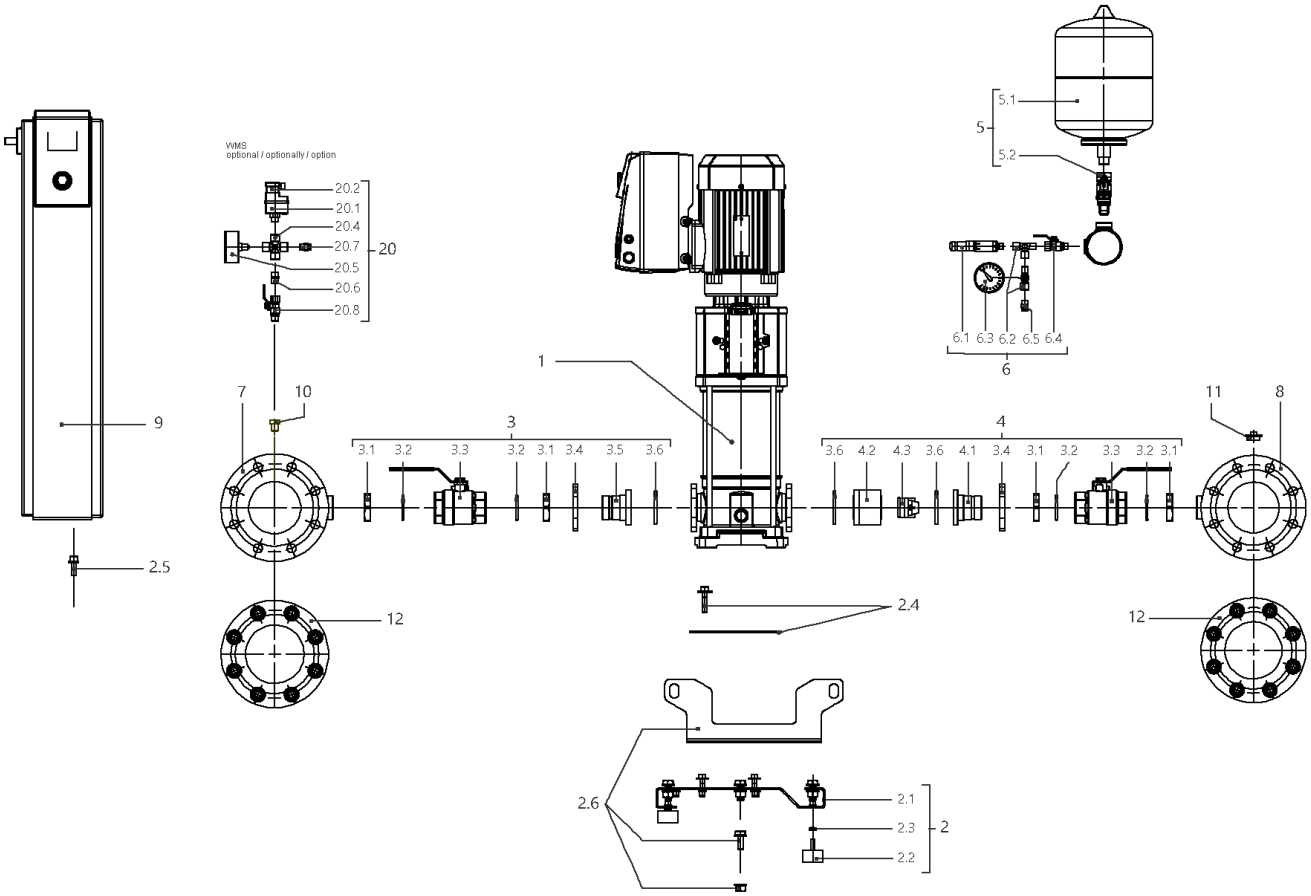
VIMS
optional / optionally / option
20.2
20.1
20.4
20.7
20.5
20.6
20.8
20
5.1
5
5.2
6.1 6.3 6.2 6.5 6.4
6
1
7
10
3
3.1 3.2 3.3 3.2 3.1 3.4 3.5 3.6
4
3.6 4.2 4.3 3.6 4.1 3.4 3.1 3.2 3.3 3.2 3.1
11
8
9
2.5
12
2.4
12
2.6
2.1
2.3
2
2.2

## SiBoost Smart 3HELIX VE1605 (2536339)

| Item | Article no. | Description | Quantity |
|---|---|---|---|
| 1 | | HELIX VE1605-1/16/E/KS/FF240/EC | 1 |
| 2 | 4197116 | BASE PLATE DE3 1150x420 KIT | 1 |
| 2.1 | | > BASEPLATE_3x4/6/10/16V_E300_BOX_150 | 1 |
| 2.2 | 2028654 | > VIBRATION DAMPER D.50X30 M10X28 | 1 |
| 2.3 | 2028281 | > NUT M10 DIN936 (ISO4035) 17H VZ | 1 |
| 2.4 | 4197083 | > HOLDER PUMP Helix 10/16 KIT | 1 |
| 2.5 | 4197084 | > HOLDER SWITCHBOX WILO Smart Control KIT | 1 |
| 2.6 | 4197117 | > LIFTING Siboost HELIX SC KIT | 1 |
| 3 | 4197072 | SUCTION SIDE Siboost Helix10/16 KIT | 1 |
| 3.1 | 2032623 | > NUT G1 1/2"SW55 MS | 1 |
| 3.2 | 2032616 | > O-RING ID.44X3,53N DIN3771 E7502 | 1 |
| 3.2 | 2534877 | > BALL TAP KDW40-H G11/2I-I-DN40 DVGW | 1 |
| 3.4 | 2032626 | > OVAL FLANGE D52-LK100 ST-VZ | 1 |
| 3.5 | 2032627 | > UNION INSERT DN40 LAPPED FLANGE | 1 |
| 3.6 | 2032628 | > O-RING ID.56,52X5,33N DIN3771 E7502 | 1 |
| 4 | 4197829 | DELIVERY SIDE Siboost Helix V16 KIT | 1 |
| 3.1 | 2032623 | > NUT G1 1/2"SW55 MS | 1 |
| 3.2 | 2032616 | > O-RING ID.44X3,53N DIN3771 E7502 | 1 |
| 3.3 | 2534877 | > BALL TAP KDW40-H G11/2I-I-DN40 DVGW | 1 |
| 3.4 | 2032626 | > OVAL FLANGE D52-LK100 ST-VZ | 1 |
| 4.1 | 2054274 | > UNION INSERT DN40 LAPPED FLANGE(W.COLLAR | 1 |
| 4.2 | 2054270 | > HOUSING RFV(RV-IN) DN50 MS VP. | 1 |
| 4.3 | 2028284 | > NON-RETURN DEVICE UNIT NV50/DN50 VP. | 1 |
| 3.6 | 2032628 | > O-RING ID.56,52X5,33N DIN3771 E7502 | 1 |
| 5 | 2032642 | DIAPHREM TANK 8L/PN16 DIN4807/T5 KIT | 1 |
| 5.1 | 2045914 | > DIAPHREM TANK 8L TYP-DD 16BAR | 1 |
| 5.2 | 2027853 | > FLOW FITTING G3/4 FOR DIAPHRAGM VES. | 1 |
| 6 | 4197076 | PRESSURE SENSOR/ GAUGE 0-16BAR KIT | 1 |
| 6.1 | 2085909 | > PRESS.SENSOR 1/4" 0-16BAR 4-20MA VP. | 1 |
| 6.2 | 4197077 | > T-PIECE 1/4" VP. | 1 |
| 6.3 | 2028692 | > PRESSURE GAUGE NG63-PN16-G1/4 | 1 |
| 6.4 | 2028291 | > BALL TAP R1/4" PN42 GIACOMINI R254DL | 1 |
| 6.5 | 2028691 | > BLOWGUN 1/4" MS 30BAR VP. | 1 |
| 7 | 4197833 | PIPE DE3 DN100-3x11/2"+2x1/4x900 VP. | 1 |

| Item | Article no. | Description | Quantity |
|---|---|---|---|
| 8 | 4197834 | PIPE DE3 DN100-3x11/2"+2x1/4+1x3/4x900VP | 1 |
| 9 | | W-CTRL-SCE-B-3x5,5KW-T4-FM-ND2 | 1 |
| Note: TO / BIS / JUSQU'AU 18/05/2014 | | | |
| 9 | 2541906 | W-CTRL-SCE-B-3x13A-T34-FM-ND2-AVC-PKG | 1 |
| Note: FROM / AB / À PARTIR DU 19/05/2014 | | | |
| 10 | 4197079 | PLUG G1/4"x10 AISI304 KIT | 1 |
| 11 | 2032654 | PLUG R3/4" MS VIEGA 1751 | 1 |
| 12 | 4197835 | BLIND-FLANGE DN100 PN16 -1.4404 KIT | 1 |
| | 2106342 | > FLAT GASKET D.120/162X2 DN100 C4430 VP. | 1 |
| | | > NUT M16 DIN934 A2 1.4301 | 1 |
| | | > SCREW M16x70 DIN933 A2 (8 PIECES) | 1 |
| | | > WASHER A17 DIN125 A2 | 1 |
| | | > FULL FLANGE ST.DN100 PN16 EN1092-1/05 A | 1 |
| | | > FLANGE COVER DN100 DIN 3443 FORM A | 1 |
| 20 | 2521150 | ASSEMBLY WMS. DE-EB. +VP | 1 |
| 20.1 | 2028652 | > PRESSURE SWITCH PS3-ASR 1/(1,3) VP. | 1 |
| 20.2 | 2130983 | > PLUG PS3-415 WITH KABEL 1,5M 2NO VP. | 1 |
| 20.4 | 2028290 | > CROSSPIECE R1/4" MS-NICKEL | 1 |
| 20.5 | 2028687 | > PRESSURE GAUGE NG63 R1/4" HI.0-6BAR | 1 |
| 20.6 | 2054268 | > DUAL NIPPLE G1/4" x G1/4" MS VP. | 1 |
| 20.7 | 2028691 | > BLOWGUN 1/4" MS 30BAR VP. | 1 |
| 20.8 | 2028291 | > BALL TAP R1/4" PN42 GIACOMINI R254DL | 1 |

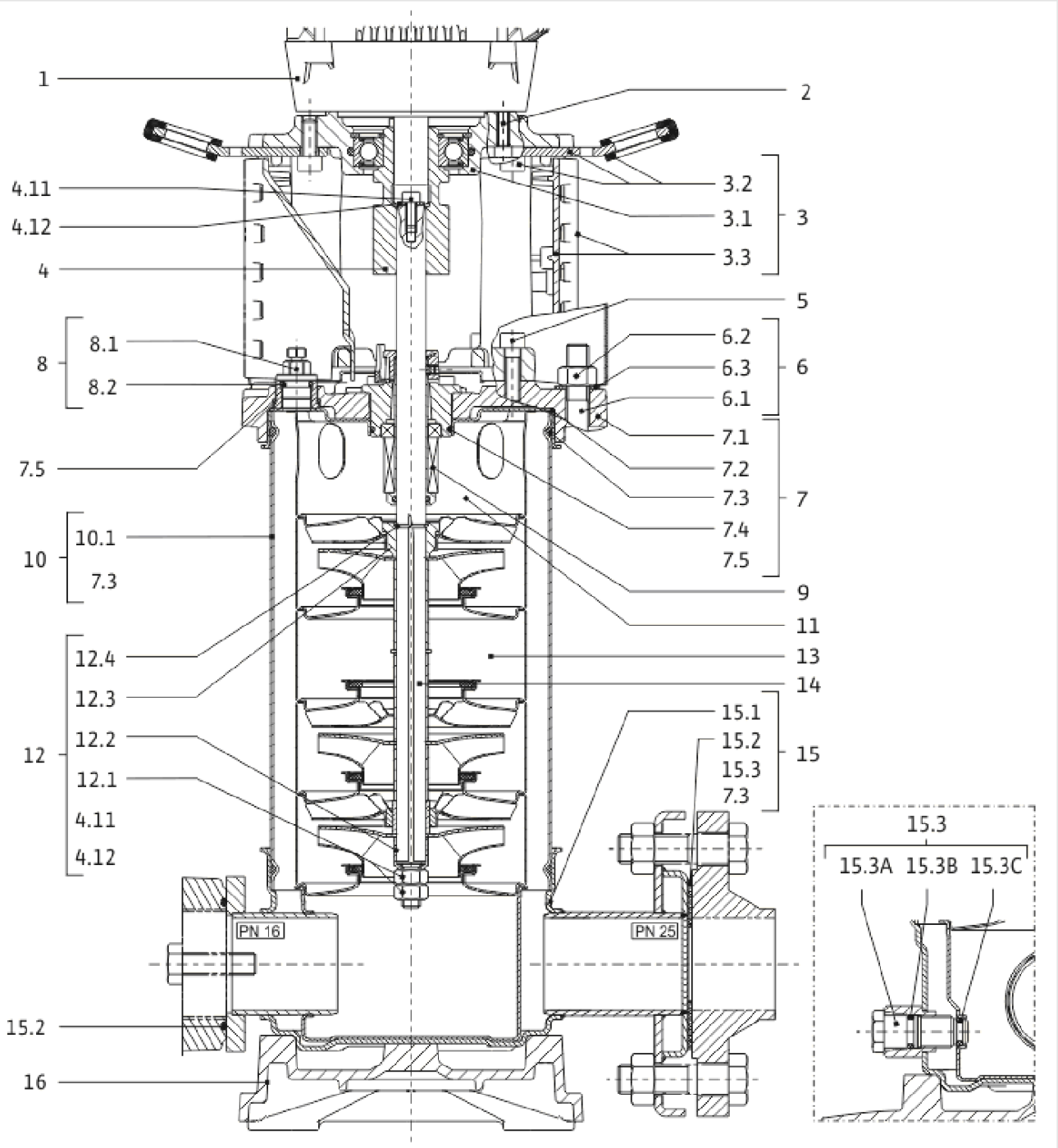
1
2
4.11
4.12
4
3.2
3.1
3.3
3
5
8
8.1
8.2
6.2
6.3
6.1
6
7.5
7.1
7.2
7.3
7.4
7.5
7
10
10.1
7.3
9
11
12
12.4
12.3
12.2
12.1
4.11
4.12
13
14
15.1
15.2
15.3
7.3
15
PN 16
PN 25
15.2
16
15.3
15.3A
15.3B
15.3C

| Item | Article no. | Description | Quantity |
|---|---|---|---|
| 1 | | DRIVE HELIX-VE1605-FF24-IE2-ATB KIT | 1 |
| Note: MOTOR BRAND ATB | | | |
| 2 | 4174093 | SCREW M12X50 (4 PIECES) | 1 |
| 3 | 4197828 | LANTERN FF240 HELIX KIT | 1 |
| 3.1 | | > LANTERN FF240 M+6" JL250 MACHINING+CATA | 1 |
| 3.2 | 4186346 | > EYELET CPL.FF240 HELIX (4 PIECES) | 1 |
| 3.3 | 4159695 | > COUPLING PROTECTOR FF HELIX KIT | 1 |
| 4 | 4159711 | COUPLING D.16XD.38 FF265 HELIX KIT | 1 |
| 5 | 4159707 | SCREW M8X30 (4 PIECES) | 1 |
| 6 | 2127554 | STUD BOLT M12X437 KIT | 1 |
| 7 | 4159685 | END SHIELD HELIX EPDM KIT | 1 |
| 7.1 | | > END SHIELD M+6" GJL250 MACHINING+CATA | 1 |
| 7.2 | 2127607 | > STATIONARY RING HOLDER 6" HELIX 1.4301 V | 1 |
| 7.3 | 4176513 | > O-RING FOR PUMP JACKET VP. | 1 |
| 7.4 | 2127603 | > O-RING ID.37,6x2,4 EPDM VP. | 1 |
| 7.5 | 2127602 | > O-RING ID.21,35x2 EPDM VP. | 1 |
| 8 | 4159686 | FILING/PURGING PLUG HELIX EPDM KIT | 1 |
| 9 | 4159696 | CARTRIDGE HELIX6-10-16 O/E KIT | 1 |
| 10 | 2127577 | HOUSING PIPE D.152x310 1.4301 KIT | 1 |
| 11 | 2127588 | CENTERING STAGE-RETURN HELIX16 1.4301 VP | 1 |
| 12 | 4159688 | SHAFT EQUIPMENT HELIX V16 BI BLOC KIT | 1 |
| 4.11 | 4102901 | > SCREW CHC-M6X14-8.8-ISO4762-GEOMET500A | 1 |
| 4.12 | 2130995 | > SERRATED LOCK WASHER D.6,2XD.14,5X28 VP. | 1 |
| 12.1 | | > NUT-H-M10-A4.70 | 1 |
| 12.2 | | > SERRATED LOCK WASHER M+16M3-316L | 1 |
| 12.3 | | > STOP COLLAR OF IMPELLER L18,8-Ø16-316L | 1 |
| 12.4 | | > STOP-RUSH-1/2-D16xd2-M+316 | 1 |
| 13 | | HYDRAULIC HELIX V 1605 1.4307 | 1 |
| 14 | 2127566 | SHAFT D.16X430 1.4301 VP. | 1 |
| 15 | 4217899 | PUMP HOUSING HELIX DN50 PN16 1.4301 KIT | 1 |
| 7.3 | 4176513 | > O-RING FOR PUMP JACKET VP. | 1 |
| 15.1 | | > BLASTING PPE HOUSING V-PN16-DN50-304 | 1 |
| 15.2 | 4217895 | > COUNTER FLANGE-G2"-PN16-GJL KIT | 1 |
| 15.3 | 4171321 | > PRIMING/DRAIN PLUG EPDM HELIX KIT | 1 |

| Item | Article no. | Description | Quantity |
|---|---|---|---|
| 16 | 2127601 | BASEPLATE HELIX V16 VP. | 1 |

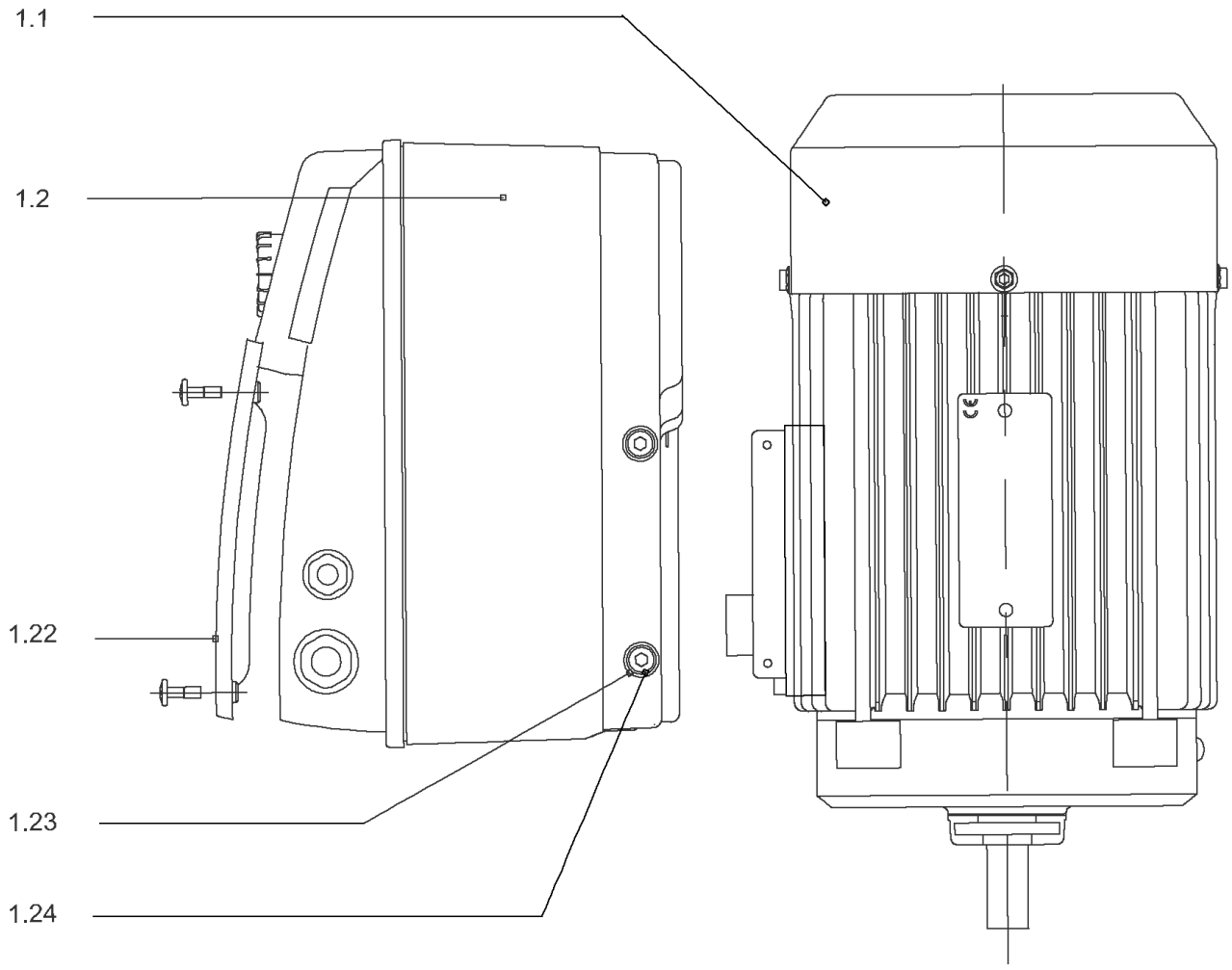
1.1
1.2
1.22
1.23
1.24

## DRIVE HELIX-VE1605-FF24-IE2-ATB KIT

| Item | Article no. | Description | Quantity |
|---|---|---|---|
| 1.1 | | MOTOR 5,5/2/132 FF240 3~380V 60HZ IE2 VP | 1 |
| Note: no longer available/nicht mehrlieferbar/n'est plus disponible | | | |
| | | SPARE PARTS MOTOR:ON REQUEST | 1 |
| 1.2 | 4184971 | MODULE HELIX-VE1605-IE2-ATB KIT | 1 |
| 1.22 | 2111344 | > MODULE COVER/GASKET TL5 KIT | 1 |
| 1.23 | 4215716 | > SCREW M5X16 DIN912 8.8 A2A (4pieces) VP. | 1 |
| 1.24 | 2057978 | > RONDELLE A5,3 DIN6797 FST ZN (4 PIECES) | 1 |

## COUPLING D.16XD.38 FF265 HELIX KIT (4159711)

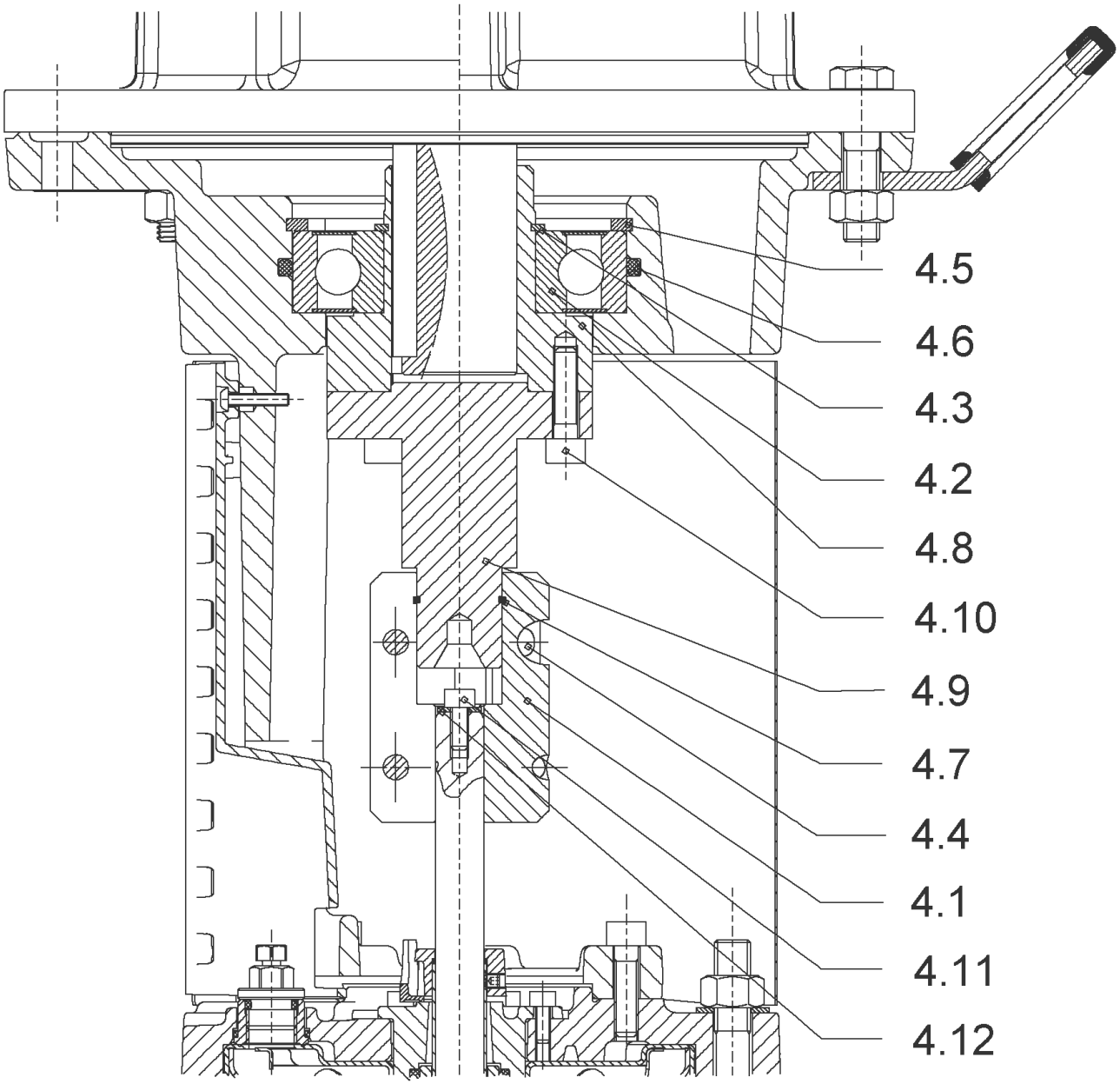

## COUPLING D.16XD.38 FF265 HELIX KIT (4159711)

| Item | Article no. | Description | Quantity |
|---|---|---|---|
| 4.1 | 2131018 | COUPLING 2 PARTS D.16XD.28XL.82,4 VP. | 1 |
| 4.2 | 2131017 | BALL BEARING 6310/ZZ-C4(HT)VP. | 1 |
| 4.3 | 4234253 | CIRCLIP-FOR-SHAFT-D50x2 VP. | 1 |
| 4.4 | 4157726 | SCREW KIT M8X30 (4 PIECES) | 1 |
| 4.5 | 4234255 | CIRCLIPS 110X4 VP. | 1 |
| 4.6 | 4233944 | O-RING ID.110 VP. | 1 |
| 4.7 | 2131019 | RETAINING RING D.26xD.2 DIN7993 VP. | 1 |
| 4.10 | 4157726 | SCREW KIT M8X30 (4 PIECES) | 1 |
| 4.11 | 4102901 | SCREW CHC-M6X14-8.8-ISO4762-GEOMET500A | 1 |
| 4.12 | 2130995 | SERRATED LOCK WASHER D.6,2XD.14,5X28 VP. | 1 |
| | | NOMEL CONTACT WASHER 8x16x1,4 STEEL ZC | 1 |
| 4.8 | 2131020 | HUB D.38XD.50 VP. | 1 |
| 4.9 | 2131021 | SPACER D.28XD.45 VP. | 1 |

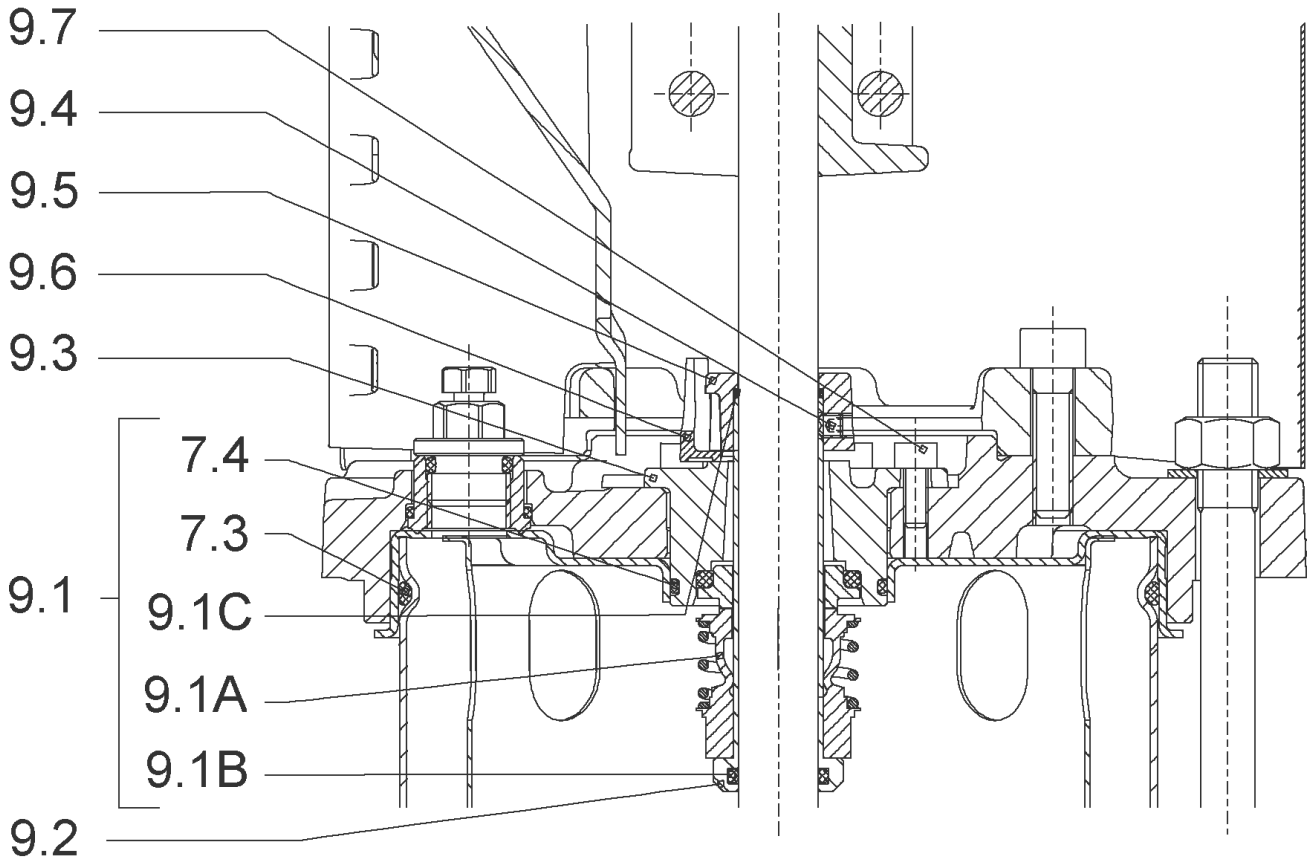
9.7
9.4
9.5
9.6
9.3
7.4
7.3
9.1
9.1C
9.1A
9.1B
9.2

## CARTRIDGE HELIX6-10-16 O/E KIT (4159696)

| Item | Article no. | Description | Quantity |
|---|---|---|---|
| 9.1 | 4159697 | SEAL-KIT-HELIX6-10-16 O/E | 1 |
| 7.3 | 4176513 | > O-RING FOR PUMP JACKET VP. | 1 |
| 7.4 | 2127603 | > O-RING ID.37,6x2,4 EPDM VP. | 1 |
| 9.1A | 2130966 | > MECH.SEAL HELIX2-4-6-10-16 O/E VP. | 1 |
| 9.1B | 2130967 | > O-RING D.16X2,5 EPDM VP. | 1 |
| 9.1C | 4176519 | > O-RING Ø16xØ1.25 VP. | 1 |
| 9.2 | 2130961 | SHAFT SLEEVE D.18/16X72,2 1.4404 VP. | 1 |
| 9.3 | 2130962 | RING HOLDER D.18 G606/G6 1.4301 VP. | 1 |
| 9.4 | 4176520 | SCREW CH M5x5 A4-70 ( 3PIECES ) | 1 |
| 9.5 | 2130963 | DRIVE RING D.29/18x12,4 MACH.VP. | 1 |
| 9.6 | 2130964 | TOOL M.S.CART.HELIX VP. | 1 |
| 9.7 | 2130965 | SCREW CHC M5X12 ISO4762 A2.70(4 PIECES) | 1 |

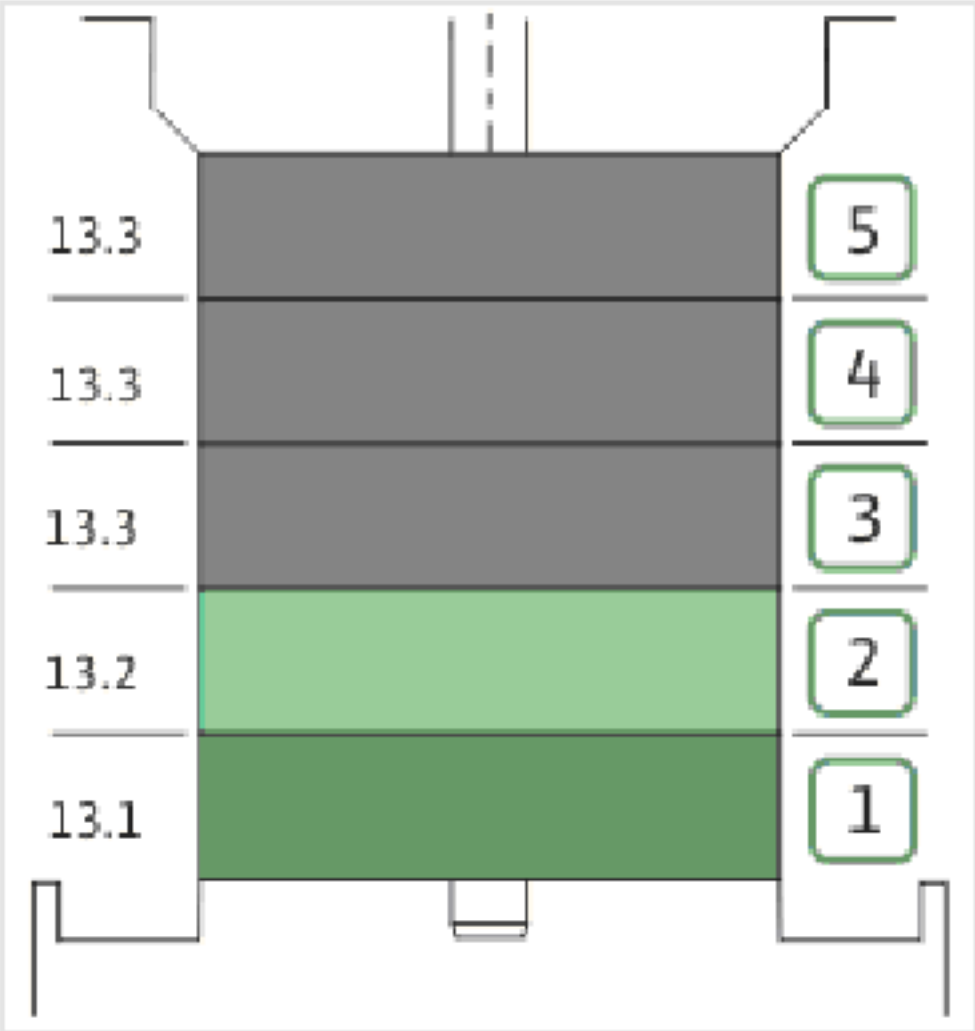
13.3
13.3
13.3
13.2
13.1
5
4
3
2
1

## HYDRAULIC HELIX V 1605 1.4307

| Item | Article no. | Description | Quantity |
|---|---|---|---|
| 13.1 | 4159720 | STAGE HELIX 16 1.4301 KIT | 1 |
| | | > MACH.STG-CASING-WOGV-WNR-M+16-304 | 1 |
| | | > IMPELLER-M+16-304 | 1 |
| 13.2 | 4159714 | STAGE BEARING HELIX 16 1.4301 KIT | 1 |
| | | > MACH.BEARING-STG-CASING-WNR-M+16-304 | 1 |
| | | > IMPELLER-M+16-304 | 1 |
| | | > SLEEVE-SPACER-Ø19,35x30,665-304 | 1 |
| | | > SHAFT-SLEEVE-D16xD20x18-CW | 1 |
| 13.3 | 4159715 | INTERMEDIATE STAGE HELIX 16 1.4301 KIT | 1 |
| | | > CORPS-ETG-STD-ACR-AJR-USIN.M+16-304 | 1 |
| | | > IMPELLER-M+16-304 | 1 |
| | | > SPACER Ø16X19.4-L48.6-304 | 1 |

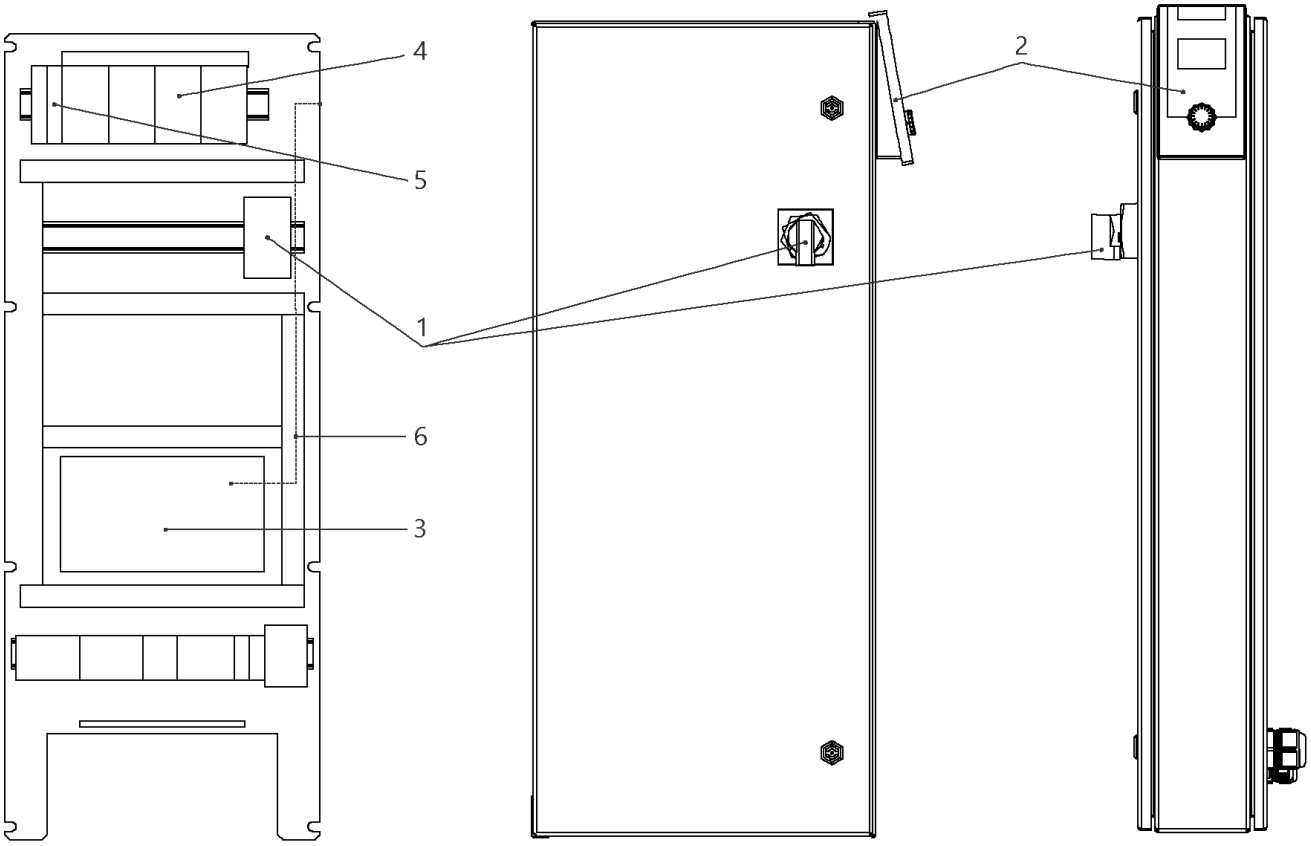
4
5
1
6
3
2

## W-CTRL-SCE-B-3x5,5KW-T4-FM-ND2

| Item | Article no. | Description | Quantity |
|---|---|---|---|
| 1 | 2104473 | MAIN SWITCH OT63F3 L105 KIT | 1 |
| 2 | 4184784 | CONTROL PANEL HMI SC KIT | 1 |
| 2 | 4185259 | ASSEMBLY DISPLAY SC PKG VP. | 1 |
| 3 | 4185257 | ASSEMBLY CPU SCe Booster VP. | 1 |
| 4 | 2051217 | AUTOM.CIRCUIT BREAKER S203 B16 TO7,5kW | 1 |
| 5 | 2046288 | CIRCUIT BREAKER S201 B16 | 1 |
| 6 | 4194956 | PATCH CABLE RJ45 CAT6 1,0M BLUE SC-PANEL | 1 |

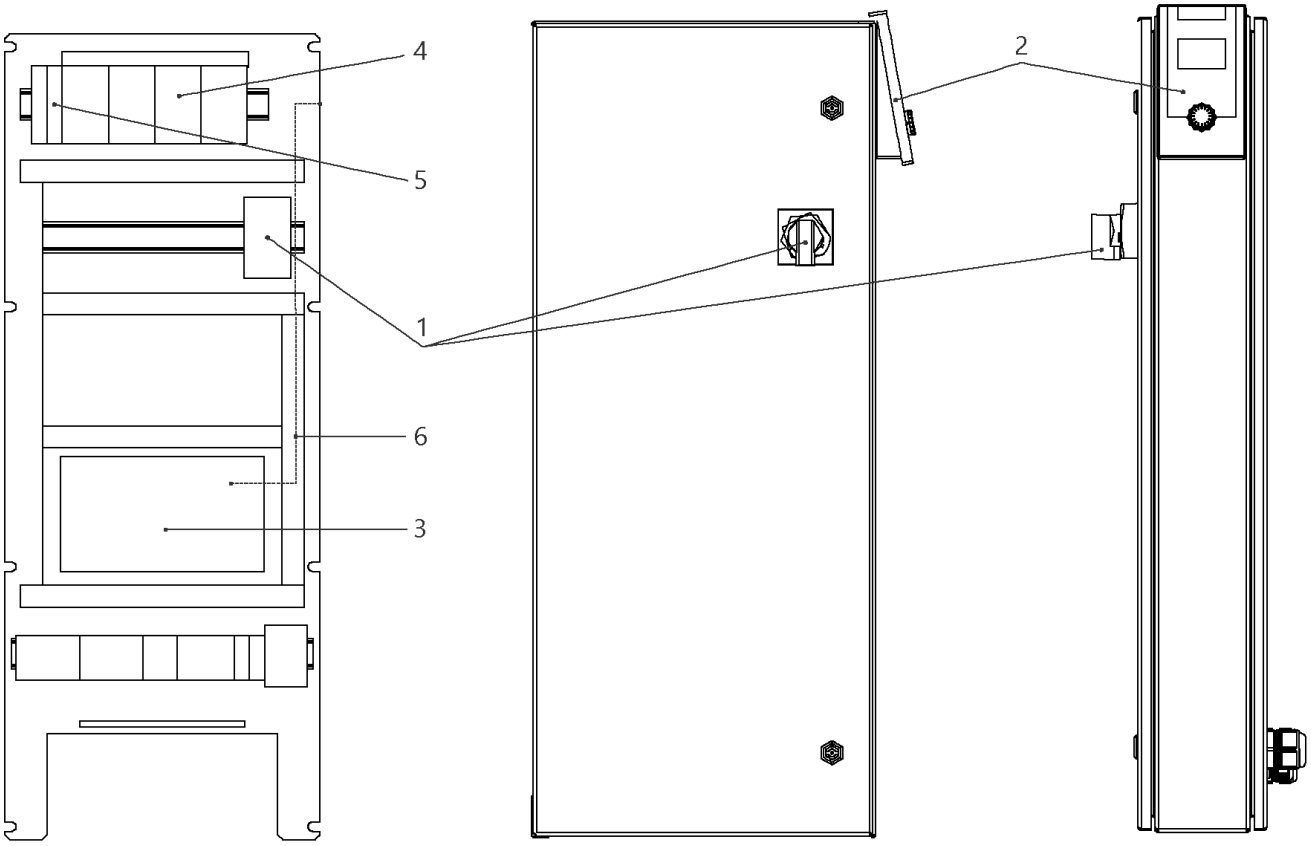
4
5
1
6
3
2

## W-CTRL-SCE-B-3x13A-T34-FM-ND2-AVC-PKG (2541906)

| Item | Article no. | Description | Quantity |
|---|---|---|---|
| 1 | 2104473 | MAIN SWITCH OT63F3 L105 KIT | 1 |
| 2 | 4184784 | CONTROL PANEL HMI SC KIT | 1 |
| 2 | 4185259 | ASSEMBLY DISPLAY SC PKG VP. | 1 |
| Note: DISPLAY ALONE / PLATINE SEULE | | | |
| 3 | 4185257 | ASSEMBLY CPU SCe Booster VP. | 1 |
| 4 | 2051217 | AUTOM.CIRCUIT BREAKER S203 B16 TO7,5kW | 1 |
| 5 | 2046288 | CIRCUIT BREAKER S201 B16 | 1 |
| 6 | 4194956 | PATCH CABLE RJ45 CAT6 1,0M BLUE SC-PANEL | 1 |

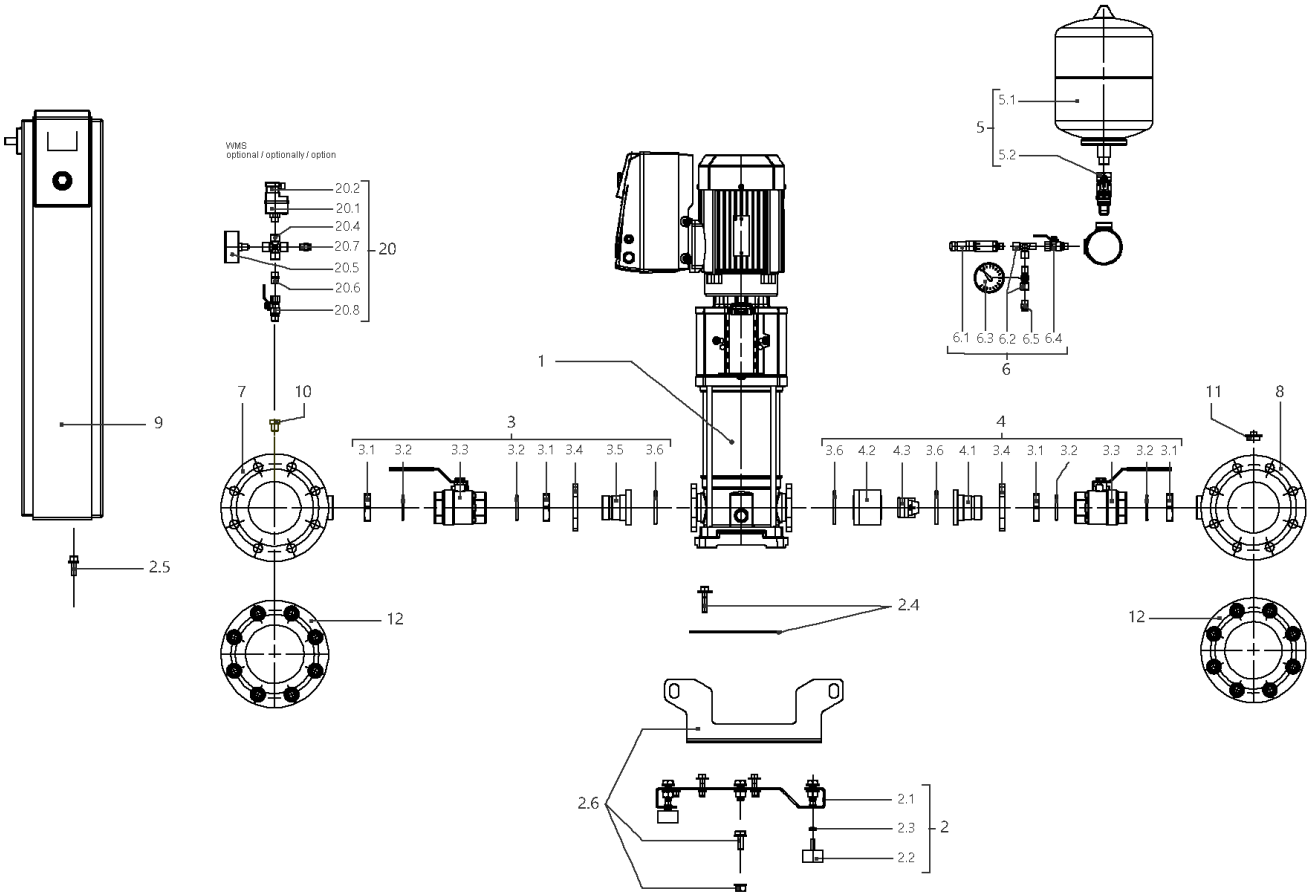
VIMS
optional / optionally / option
20.2
20.1
20.4
20.7
20.5
20.6
20.8
20
5.1
5
5.2
6.1 6.3 6.2 6.5 6.4
6
1
7
10
3
3.1 3.2 3.3 3.2 3.1 3.4 3.5 3.6
4
3.6 4.2 4.3 3.6 4.1 3.4 3.1 3.2 3.3 3.2 3.1
11
8
9
2.5
12
2.4
12
2.6
2.1
2.3
2.2
2

## SiBoost Smart 3HELIX VE1606 (2536340)

| Item | Article no. | Description | Quantity |
|---|---|---|---|
| 1 | | HELIX VE1606-1/16/E/KS/FF240/EC | 1 |
| 2 | 4197116 | BASE PLATE DE3 1150x420 KIT | 1 |
| 2.1 | | > BASEPLATE_3x4/6/10/16V_E300_BOX_150 | 1 |
| 2.2 | 2028654 | > VIBRATION DAMPER D.50X30 M10X28 | 1 |
| 2.3 | 2028281 | > NUT M10 DIN936 (ISO4035) 17H VZ | 1 |
| 2.4 | 4197083 | > HOLDER PUMP Helix 10/16 KIT | 1 |
| 2.5 | 4197084 | > HOLDER SWITCHBOX WILO Smart Control KIT | 1 |
| 2.6 | 4197117 | > LIFTING Siboost HELIX SC KIT | 1 |
| 3 | 4197072 | SUCTION SIDE Siboost Helix10/16 KIT | 1 |
| 3.1 | 2032623 | > NUT G1 1/2"SW55 MS | 1 |
| 3.2 | 2032616 | > O-RING ID.44X3,53N DIN3771 E7502 | 1 |
| 3.2 | 2534877 | > BALL TAP KDW40-H G11/2I-I-DN40 DVGW | 1 |
| 3.4 | 2032626 | > OVAL FLANGE D52-LK100 ST-VZ | 1 |
| 3.5 | 2032627 | > UNION INSERT DN40 LAPPED FLANGE | 1 |
| 3.6 | 2032628 | > O-RING ID.56,52X5,33N DIN3771 E7502 | 1 |
| 4 | 4197829 | DELIVERY SIDE Siboost Helix V16 KIT | 1 |
| 3.1 | 2032623 | > NUT G1 1/2"SW55 MS | 1 |
| 3.2 | 2032616 | > O-RING ID.44X3,53N DIN3771 E7502 | 1 |
| 3.3 | 2534877 | > BALL TAP KDW40-H G11/2I-I-DN40 DVGW | 1 |
| 3.4 | 2032626 | > OVAL FLANGE D52-LK100 ST-VZ | 1 |
| 4.1 | 2054274 | > UNION INSERT DN40 LAPPED FLANGE(W.COLLAR | 1 |
| 4.2 | 2054270 | > HOUSING RFV(RV-IN) DN50 MS VP. | 1 |
| 4.3 | 2028284 | > NON-RETURN DEVICE UNIT NV50/DN50 VP. | 1 |
| 3.6 | 2032628 | > O-RING ID.56,52X5,33N DIN3771 E7502 | 1 |
| 5 | 2032642 | DIAPHREM TANK 8L/PN16 DIN4807/T5 KIT | 1 |
| 5.1 | 2045914 | > DIAPHREM TANK 8L TYP-DD 16BAR | 1 |
| 5.2 | 2027853 | > FLOW FITTING G3/4 FOR DIAPHRAGM VES. | 1 |
| 6 | 4197076 | PRESSURE SENSOR/ GAUGE 0-16BAR KIT | 1 |
| 6.1 | 2085909 | > PRESS.SENSOR 1/4" 0-16BAR 4-20MA VP. | 1 |
| 6.2 | 4197077 | > T-PIECE 1/4" VP. | 1 |
| 6.3 | 2028692 | > PRESSURE GAUGE NG63-PN16-G1/4 | 1 |
| 6.4 | 2028291 | > BALL TAP R1/4" PN42 GIACOMINI R254DL | 1 |
| 6.5 | 2028691 | > BLOWGUN 1/4" MS 30BAR VP. | 1 |
| 7 | 4197833 | PIPE DE3 DN100-3x11/2"+2x1/4x900 VP. | 1 |

| Item | Article no. | Description | Quantity |
|---|---|---|---|
| 8 | 4197834 | PIPE DE3 DN100-3x11/2"+2x1/4+1x3/4x900VP | 1 |
| 9 | | W-CTRL-SCE-B-3x7,5KW-T4-FM-ND2 | 1 |
| Note: TO / BIS / JUSQU'AU 18/05/2014 | | | |
| 9 | 2545208 | W-CTRL-SCE-B-3x16A-T34-FM-ND2-MOD-PKG | 1 |
| Note: FROM / AB / À PARTIR DU 19/05/2014 | | | |
| 10 | 4197079 | PLUG G1/4"x10 AISI304 KIT | 1 |
| 11 | 2032654 | PLUG R3/4" MS VIEGA 1751 | 1 |
| 12 | 4197835 | BLIND-FLANGE DN100 PN16 -1.4404 KIT | 1 |
| | 2106342 | > FLAT GASKET D.120/162X2 DN100 C4430 VP. | 1 |
| | | > NUT M16 DIN934 A2 1.4301 | 1 |
| | | > SCREW M16x70 DIN933 A2 (8 PIECES) | 1 |
| | | > WASHER A17 DIN125 A2 | 1 |
| | | > FULL FLANGE ST.DN100 PN16 EN1092-1/05 A | 1 |
| | | > FLANGE COVER DN100 DIN 3443 FORM A | 1 |
| 20 | 2521150 | ASSEMBLY WMS. DE-EB. +VP | 1 |
| 20.1 | 2028652 | > PRESSURE SWITCH PS3-ASR 1/(1,3) VP. | 1 |
| 20.2 | 2130983 | > PLUG PS3-415 WITH KABEL 1,5M 2NO VP. | 1 |
| 20.4 | 2028290 | > CROSSPIECE R1/4" MS-NICKEL | 1 |
| 20.5 | 2028687 | > PRESSURE GAUGE NG63 R1/4" HI.0-6BAR | 1 |
| 20.6 | 2054268 | > DUAL NIPPLE G1/4" x G1/4" MS VP. | 1 |
| 20.7 | 2028691 | > BLOWGUN 1/4" MS 30BAR VP. | 1 |
| 20.8 | 2028291 | > BALL TAP R1/4" PN42 GIACOMINI R254DL | 1 |

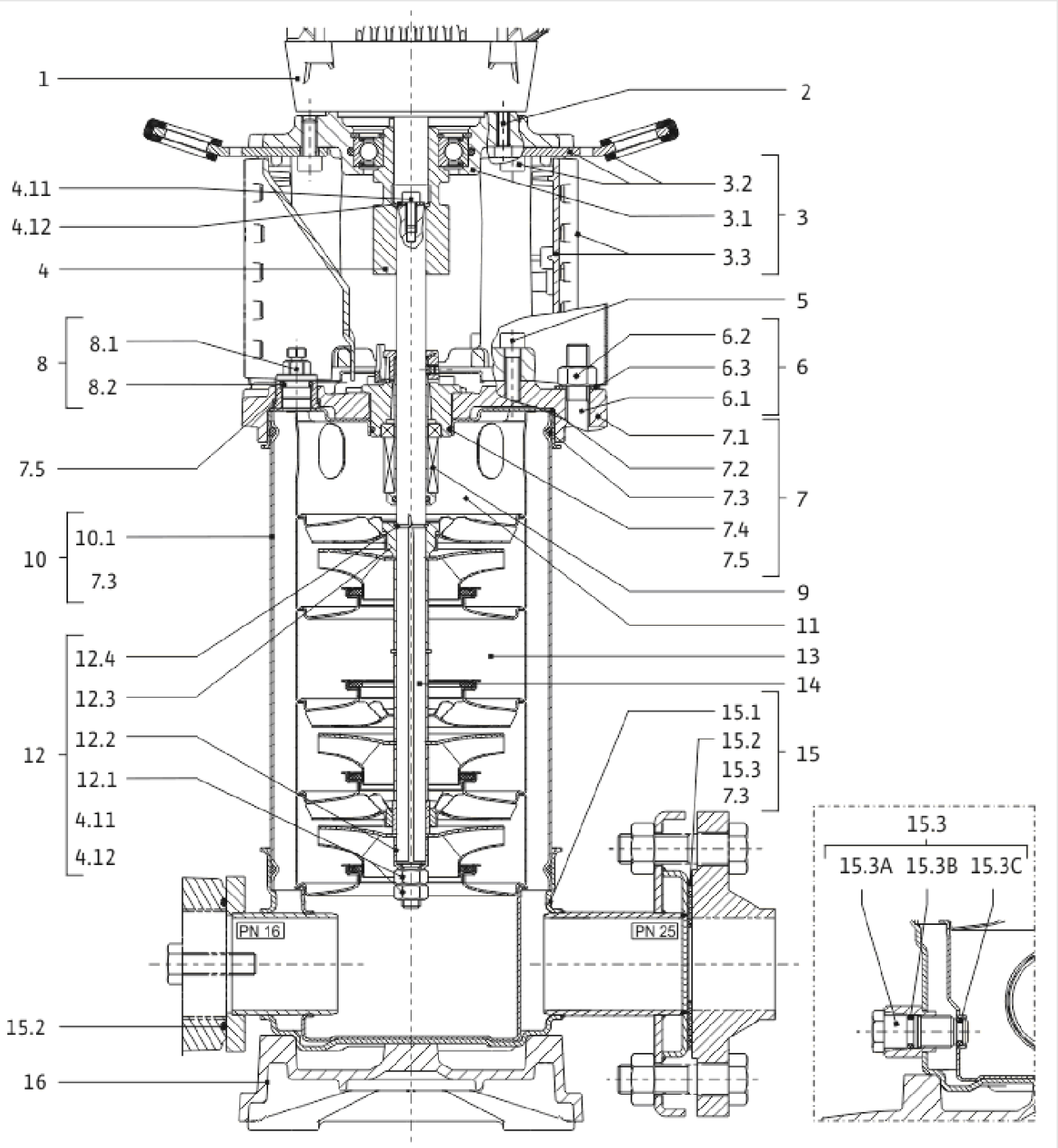
1
2
4.11
4.12
4
3.2
3.1
3.3
3
5
8
8.1
8.2
6.2
6.3
6.1
6
7.5
7.1
7.2
7.3
7.4
7.5
7
10
10.1
7.3
9
11
12
12.4
12.3
12.2
12.1
4.11
4.12
13
14
15.1
15.2
15.3
7.3
15
PN 16
PN 25
15.2
16
15.3
15.3A
15.3B
15.3C

| Item | Article no. | Description | Quantity |
|---|---|---|---|
| 1 | | DRIVE HELIX-VE1606-FF24-IE2-ATB KIT | 1 |
| Note: MOTOR BRAND SIEMENS | | | |
| 2 | 4174093 | SCREW M12X50 (4 PIECES) | 1 |
| 3 | 4197828 | LANTERN FF240 HELIX KIT | 1 |
| 3.1 | | > LANTERN FF240 M+6" JL250 MACHINING+CATA | 1 |
| 3.2 | 4186346 | > EYELET CPL.FF240 HELIX (4 PIECES) | 1 |
| 3.3 | 4159695 | > COUPLING PROTECTOR FF HELIX KIT | 1 |
| 4 | 4159711 | COUPLING D.16XD.38 FF265 HELIX KIT | 1 |
| 5 | 4159707 | SCREW M8X30 (4 PIECES) | 1 |
| 6 | 2127555 | STUD BOLT M12X485 KIT | 1 |
| 7 | 4159685 | END SHIELD HELIX EPDM KIT | 1 |
| 7.1 | | > END SHIELD M+6" GJL250 MACHINING+CATA | 1 |
| 7.2 | 2127607 | > STATIONARY RING HOLDER 6" HELIX 1.4301 V | 1 |
| 7.3 | 4176513 | > O-RING FOR PUMP JACKET VP. | 1 |
| 7.4 | 2127603 | > O-RING ID.37,6x2,4 EPDM VP. | 1 |
| 7.5 | 2127602 | > O-RING ID.21,35x2 EPDM VP. | 1 |
| 8 | 4159686 | FILING/PURGING PLUG HELIX EPDM KIT | 1 |
| 9 | 4159696 | CARTRIDGE HELIX6-10-16 O/E KIT | 1 |
| 10 | 2127578 | HOUSING PIPE D.152x360 1.4307 KIT | 1 |
| 7.3 | 4176513 | > O-RING FOR PUMP JACKET VP. | 1 |
| 10.1 | | > HOUSING-PIPE Ø152-M+1008/1606-304 | 1 |
| 11 | 2127588 | CENTERING STAGE-RETURN HELIX16 1.4301 VP | 1 |
| 12 | 4159688 | SHAFT EQUIPMENT HELIX V16 BI BLOC KIT | 1 |
| 4.11 | 4102901 | > SCREW CHC-M6X14-8.8-ISO4762-GEOMET500A | 1 |
| 4.12 | 2130995 | > SERRATED LOCK WASHER D.6,2XD.14,5X28 VP. | 1 |
| 12.1 | | > NUT-H-M10-A4.70 | 1 |
| 12.2 | | > SERRATED LOCK WASHER M+16M3-316L | 1 |
| 12.3 | | > STOP COLLAR OF IMPELLER L18,8-Ø16-316L | 1 |
| 12.4 | | > STOP-RUSH-1/2-D16xd2-M+316 | 1 |
| 13 | | HYDRAULIC HELIX V 1606 1.4307 | 1 |
| 14 | 4177829 | SHAFT Ø16 X480 1.4301 VP. | 1 |
| 15 | 4217899 | PUMP HOUSING HELIX DN50 PN16 1.4301 KIT | 1 |
| 7.3 | 4176513 | > O-RING FOR PUMP JACKET VP. | 1 |
| 15.1 | | > BLASTING PPE HOUSING V-PN16-DN50-304 | 1 |

| Item | Article no. | Description | Quantity |
|---|---|---|---|
| 15.2 | 4217895 | > COUNTER FLANGE-G2"-PN16-GJL KIT | 1 |
| 15.3 | 4171321 | > PRIMING/DRAIN PLUG EPDM HELIX KIT | 1 |
| 16 | 2127601 | BASEPLATE HELIX V16 VP. | 1 |

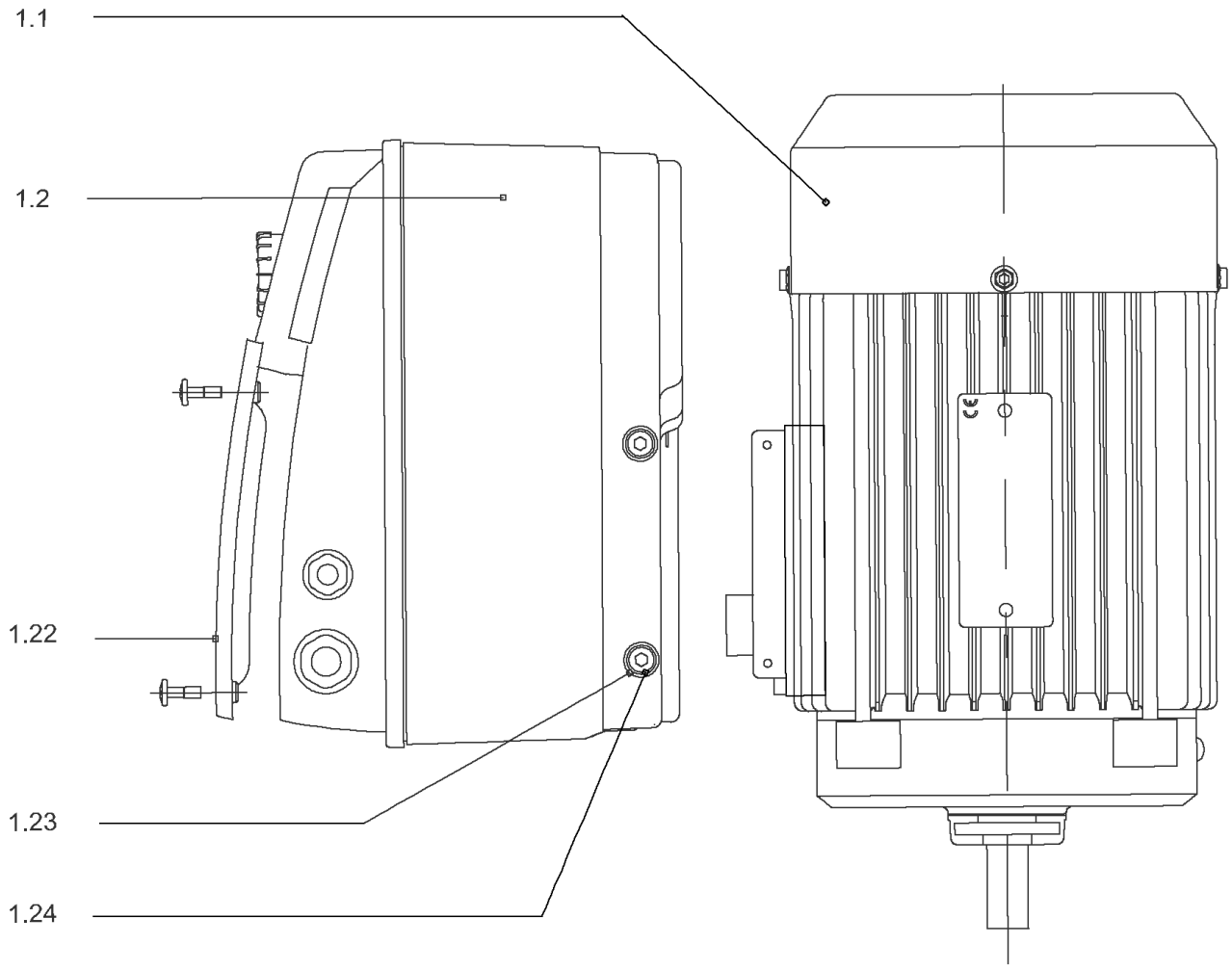
1.1
1.2
1.22
1.23
1.24

## DRIVE HELIX-VE1606-FF24-IE2-ATB KIT

| Item | Article no. | Description | Quantity |
|---|---|---|---|
| 1.1 | | MOTOR 7,5/2/132 FF240 3~380V 60HZ IE2 VP | 1 |
| Note: no longer available/nicht mehrlieferbar/n'est plus disponible | | | |
| | | SPARE PARTS MOTOR:ON REQUEST | 1 |
| 1.2 | 4193492 | MODULE HELIX-VE1606-IE2-ATB KIT | 1 |
| 1.22 | 2111344 | > MODULE COVER/GASKET TL5 KIT | 1 |
| 1.23 | 4215716 | > SCREW M5X16 DIN912 8.8 A2A (4pieces) VP. | 1 |
| 1.24 | 2057978 | > RONDELLE A5,3 DIN6797 FST ZN (4 PIECES) | 1 |

## COUPLING D.16XD.38 FF265 HELIX KIT (4159711)

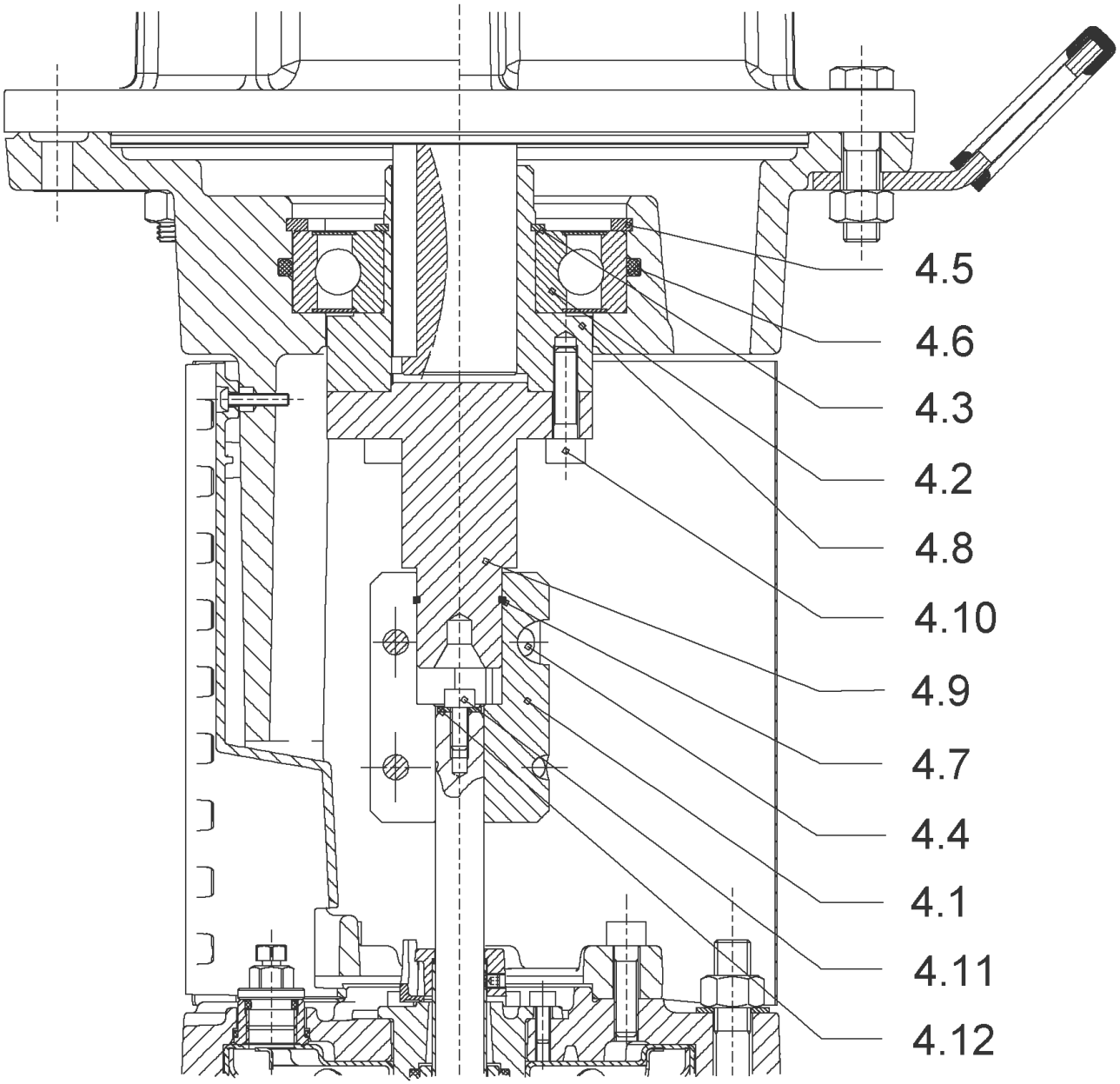

## COUPLING D.16XD.38 FF265 HELIX KIT (4159711)

| Item | Article no. | Description | Quantity |
|---|---|---|---|
| 4.1 | 2131018 | COUPLING 2 PARTS D.16XD.28XL.82,4 VP. | 1 |
| 4.2 | 2131017 | BALL BEARING 6310/ZZ-C4(HT)VP. | 1 |
| 4.3 | 4234253 | CIRCLIP-FOR-SHAFT-D50x2 VP. | 1 |
| 4.4 | 4157726 | SCREW KIT M8X30 (4 PIECES) | 1 |
| 4.5 | 4234255 | CIRCLIPS 110X4 VP. | 1 |
| 4.6 | 4233944 | O-RING ID.110 VP. | 1 |
| 4.7 | 2131019 | RETAINING RING D.26xD.2 DIN7993 VP. | 1 |
| 4.10 | 4157726 | SCREW KIT M8X30 (4 PIECES) | 1 |
| 4.11 | 4102901 | SCREW CHC-M6X14-8.8-ISO4762-GEOMET500A | 1 |
| 4.12 | 2130995 | SERRATED LOCK WASHER D.6,2XD.14,5X28 VP. | 1 |
| | | NOMEL CONTACT WASHER 8x16x1,4 STEEL ZC | 1 |
| 4.8 | 2131020 | HUB D.38XD.50 VP. | 1 |
| 4.9 | 2131021 | SPACER D.28XD.45 VP. | 1 |

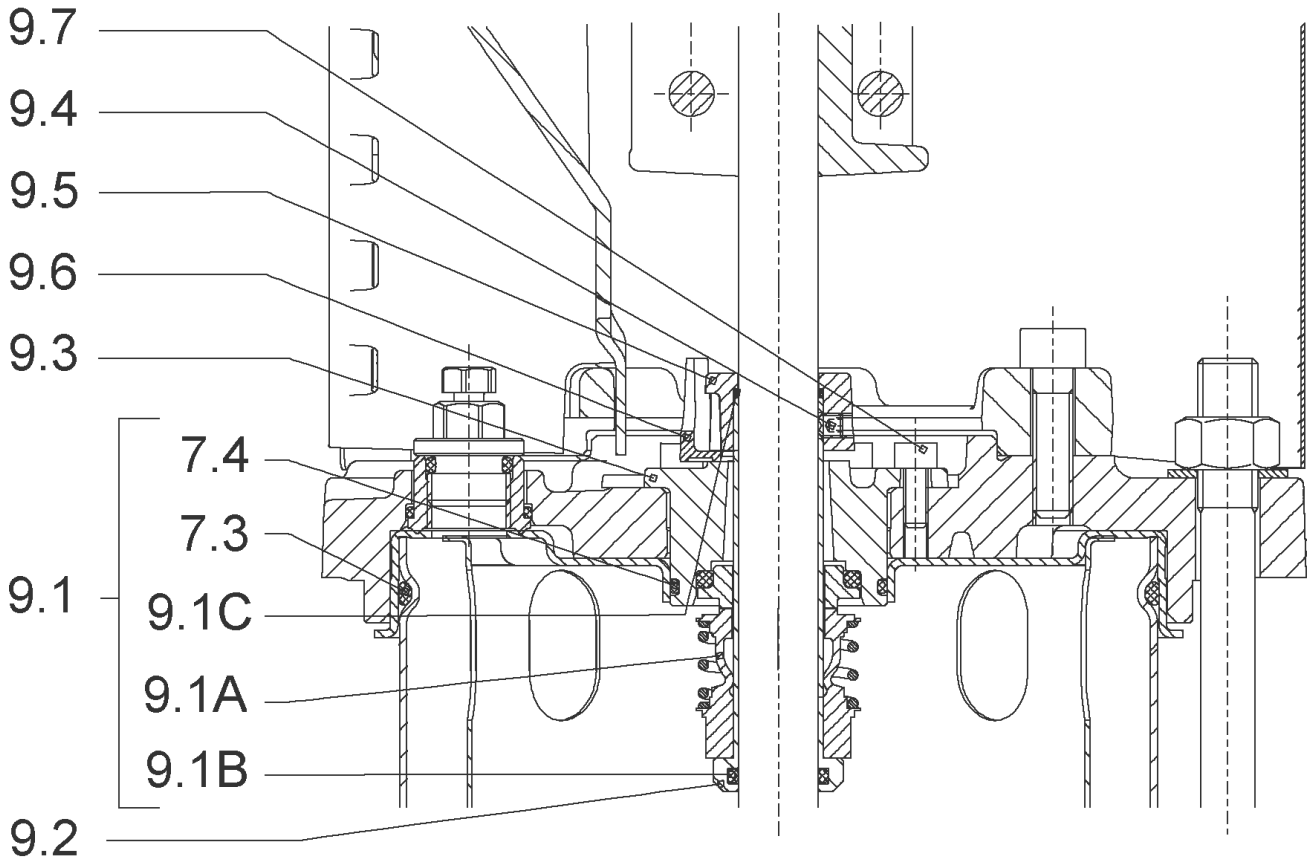
9.7
9.4
9.5
9.6
9.3
7.4
7.3
9.1
9.1C
9.1A
9.1B
9.2

## CARTRIDGE HELIX6-10-16 O/E KIT (4159696)

| Item | Article no. | Description | Quantity |
|---|---|---|---|
| 9.1 | 4159697 | SEAL-KIT-HELIX6-10-16 O/E | 1 |
| 7.3 | 4176513 | > O-RING FOR PUMP JACKET VP. | 1 |
| 7.4 | 2127603 | > O-RING ID.37,6x2,4 EPDM VP. | 1 |
| 9.1A | 2130966 | > MECH.SEAL HELIX2-4-6-10-16 O/E VP. | 1 |
| 9.1B | 2130967 | > O-RING D.16X2,5 EPDM VP. | 1 |
| 9.1C | 4176519 | > O-RING Ø16xØ1.25 VP. | 1 |
| 9.2 | 2130961 | SHAFT SLEEVE D.18/16X72,2 1.4404 VP. | 1 |
| 9.3 | 2130962 | RING HOLDER D.18 G606/G6 1.4301 VP. | 1 |
| 9.4 | 4176520 | SCREW CH M5x5 A4-70 ( 3PIECES ) | 1 |
| 9.5 | 2130963 | DRIVE RING D.29/18x12,4 MACH.VP. | 1 |
| 9.6 | 2130964 | TOOL M.S.CART.HELIX VP. | 1 |
| 9.7 | 2130965 | SCREW CHC M5X12 ISO4762 A2.70(4 PIECES) | 1 |

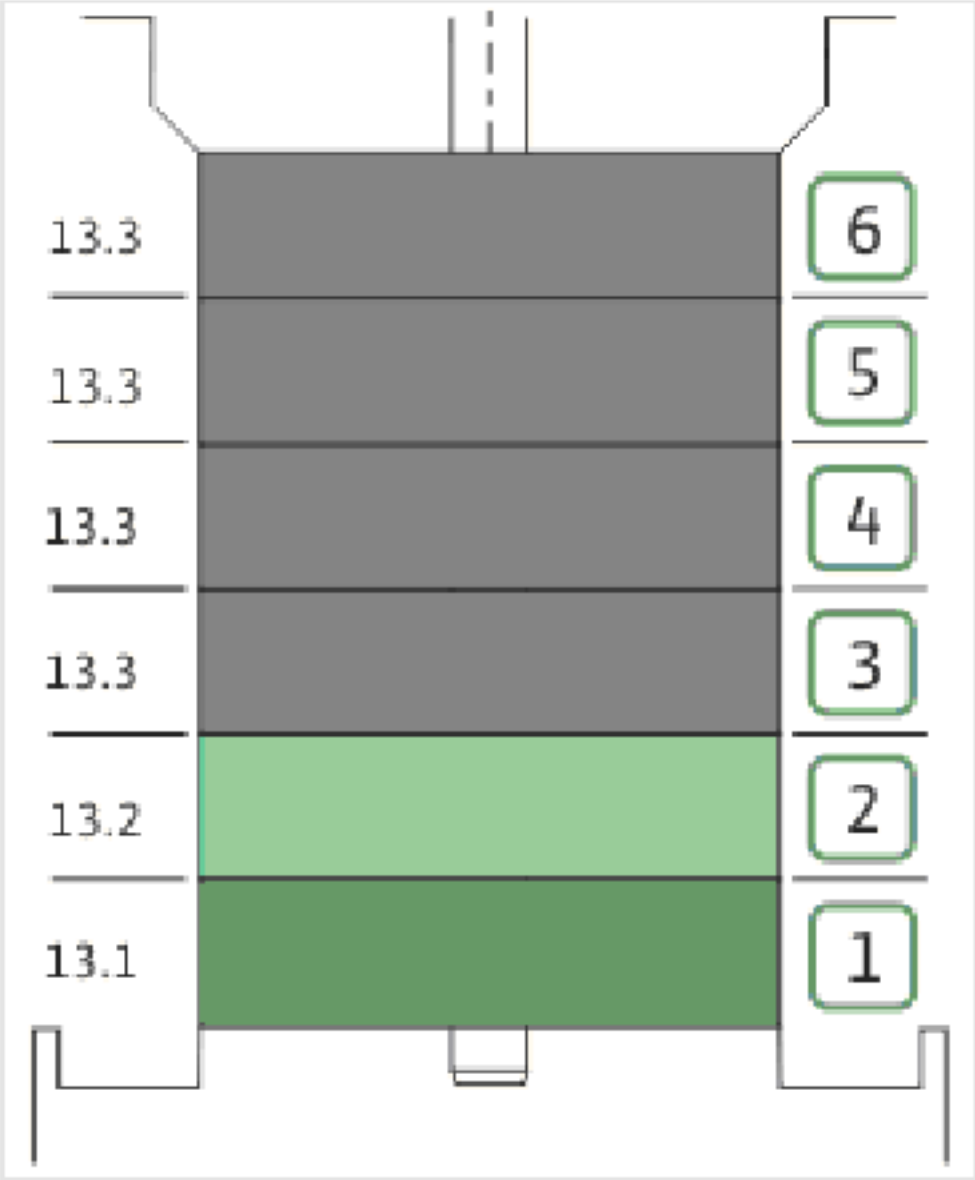
13.3
13.3
13.3
13.3
13.2
13.1
6
5
4
3
2
1

| Item | Article no. | Description | Quantity |
|---|---|---|---|
| 13.1 | 4159720 | STAGE HELIX 16 1.4301 KIT | 1 |
| | | > MACH.STG-CASING-WOGV-WNR-M+16-304 | 1 |
| | | > IMPELLER-M+16-304 | 1 |
| 13.2 | 4159714 | STAGE BEARING HELIX 16 1.4301 KIT | 1 |
| | | > MACH.BEARING-STG-CASING-WNR-M+16-304 | 1 |
| | | > IMPELLER-M+16-304 | 1 |
| | | > SLEEVE-SPACER-Ø19,35x30,665-304 | 1 |
| | | > SHAFT-SLEEVE-D16xD20x18-CW | 1 |
| 13.3 | 4159715 | INTERMEDIATE STAGE HELIX 16 1.4301 KIT | 1 |
| | | > CORPS-ETG-STD-ACR-AJR-USIN.M+16-304 | 1 |
| | | > IMPELLER-M+16-304 | 1 |
| | | > SPACER Ø16X19.4-L48.6-304 | 1 |

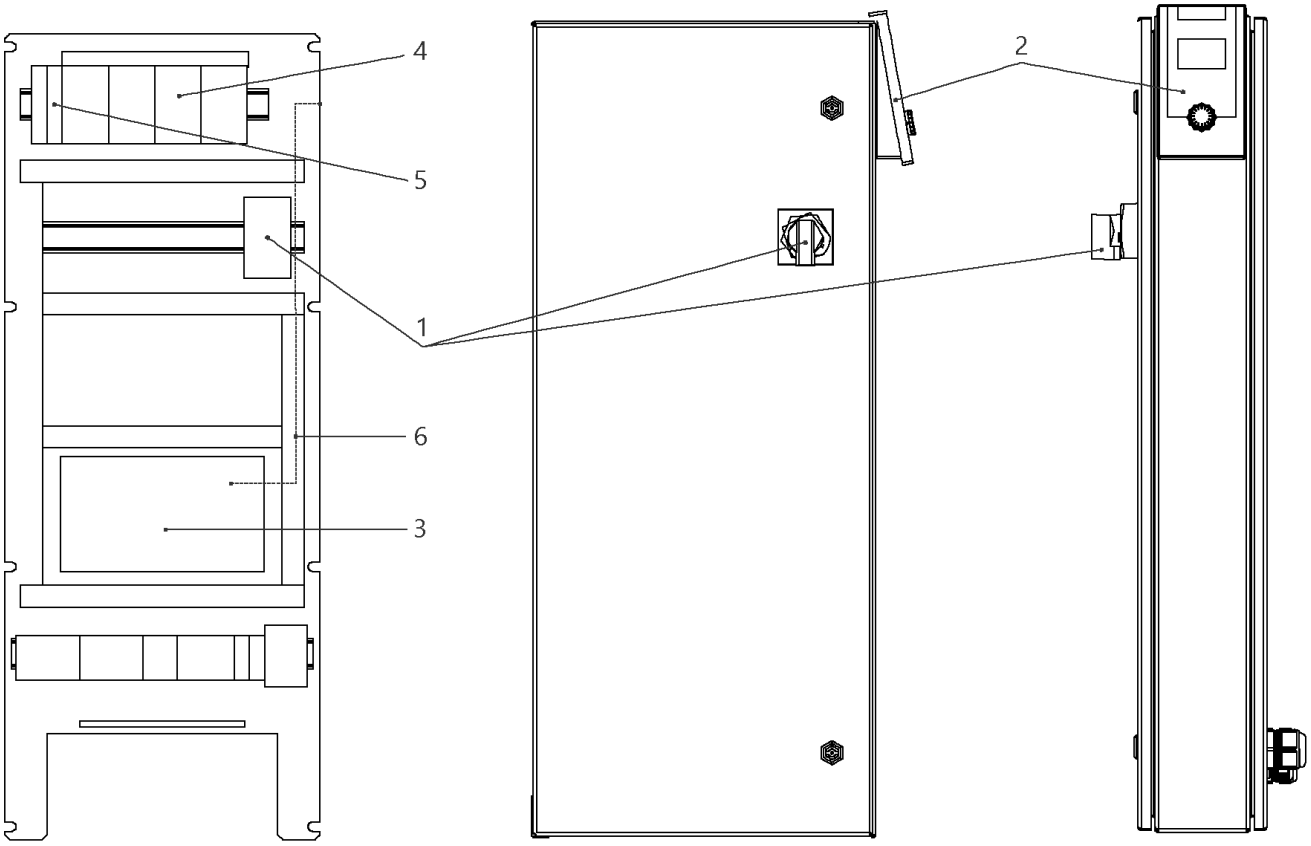
4
5
1
6
3
2

## W-CTRL-SCE-B-3x7,5KW-T4-FM-ND2

| Item | Article no. | Description | Quantity |
|---|---|---|---|
| 1 | 2104477 | MAIN SWITCH OT80F3 L105 KIT | 1 |
| 2 | 4184784 | CONTROL PANEL HMI SC KIT | 1 |
| 2 | 4185259 | ASSEMBLY DISPLAY SC PKG VP. | 1 |
| 3 | 4185257 | ASSEMBLY CPU SCe Booster VP. | 1 |
| 4 | 2051217 | AUTOM.CIRCUIT BREAKER S203 B16 TO7,5kW | 1 |
| 5 | 2046288 | CIRCUIT BREAKER S201 B16 | 1 |
| 6 | 4194956 | PATCH CABLE RJ45 CAT6 1,0M BLUE SC-PANEL | 1 |

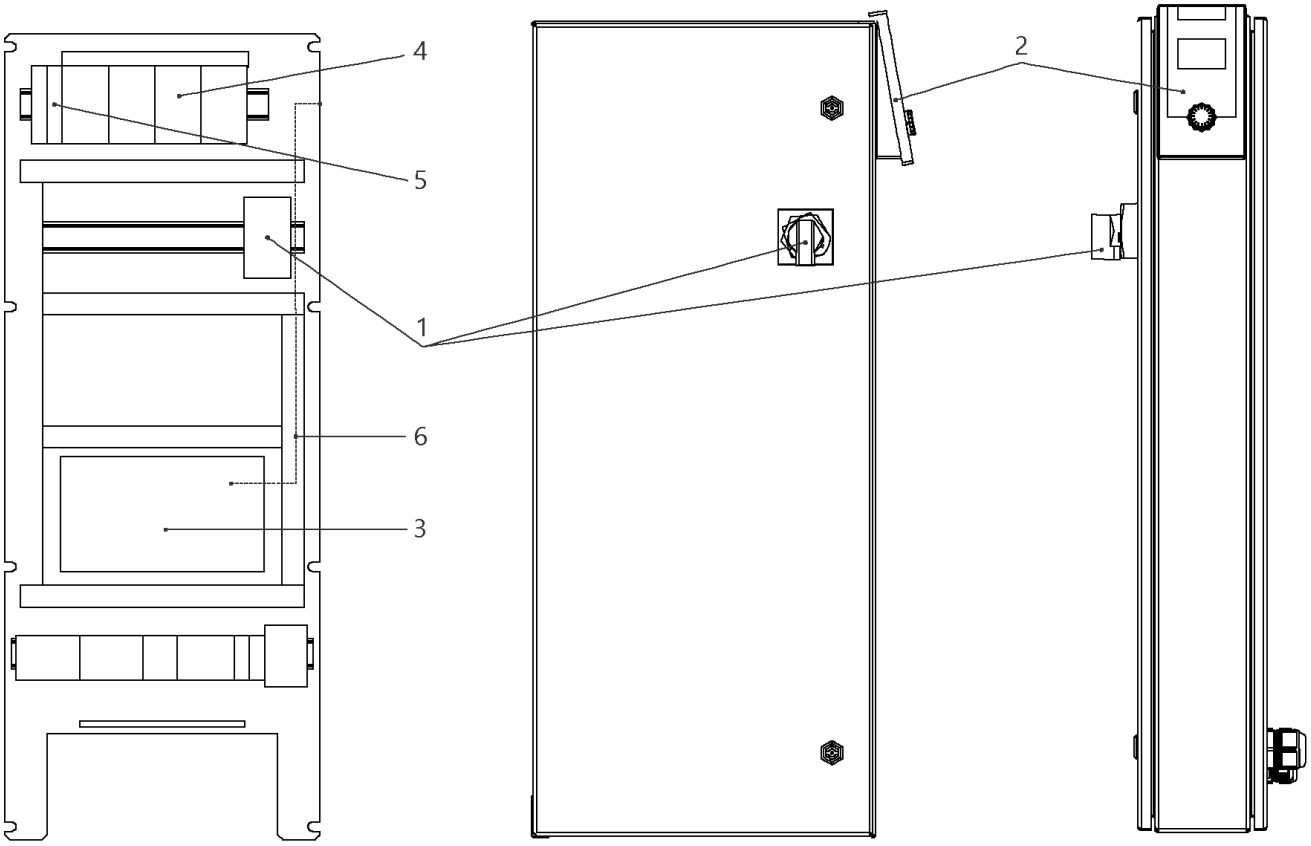
4
5
1
6
3
2

## W-CTRL-SCE-B-3x16A-T34-FM-ND2-MOD-PKG (2545208)

| Item | Article no. | Description | Quantity |
|---|---|---|---|
| 1 | 2104473 | MAIN SWITCH OT63F3 L105 KIT | 1 |
| 2 | 4184784 | CONTROL PANEL HMI SC KIT | 1 |
| 2 | 4185259 | ASSEMBLY DISPLAY SC PKG VP. | 1 |
| Note: DISPLAY ALONE / PLATINE SEULE | | | |
| 3 | 4185257 | ASSEMBLY CPU SCe Booster VP. | 1 |
| 4 | 4197832 | AUTOMATIC CIRCUIT BREAKER S203 B20 VP. | 1 |
| 5 | 2046288 | CIRCUIT BREAKER S201 B16 | 1 |
| 6 | 4194956 | PATCH CABLE RJ45 CAT6 1,0M BLUE SC-PANEL | 1 |

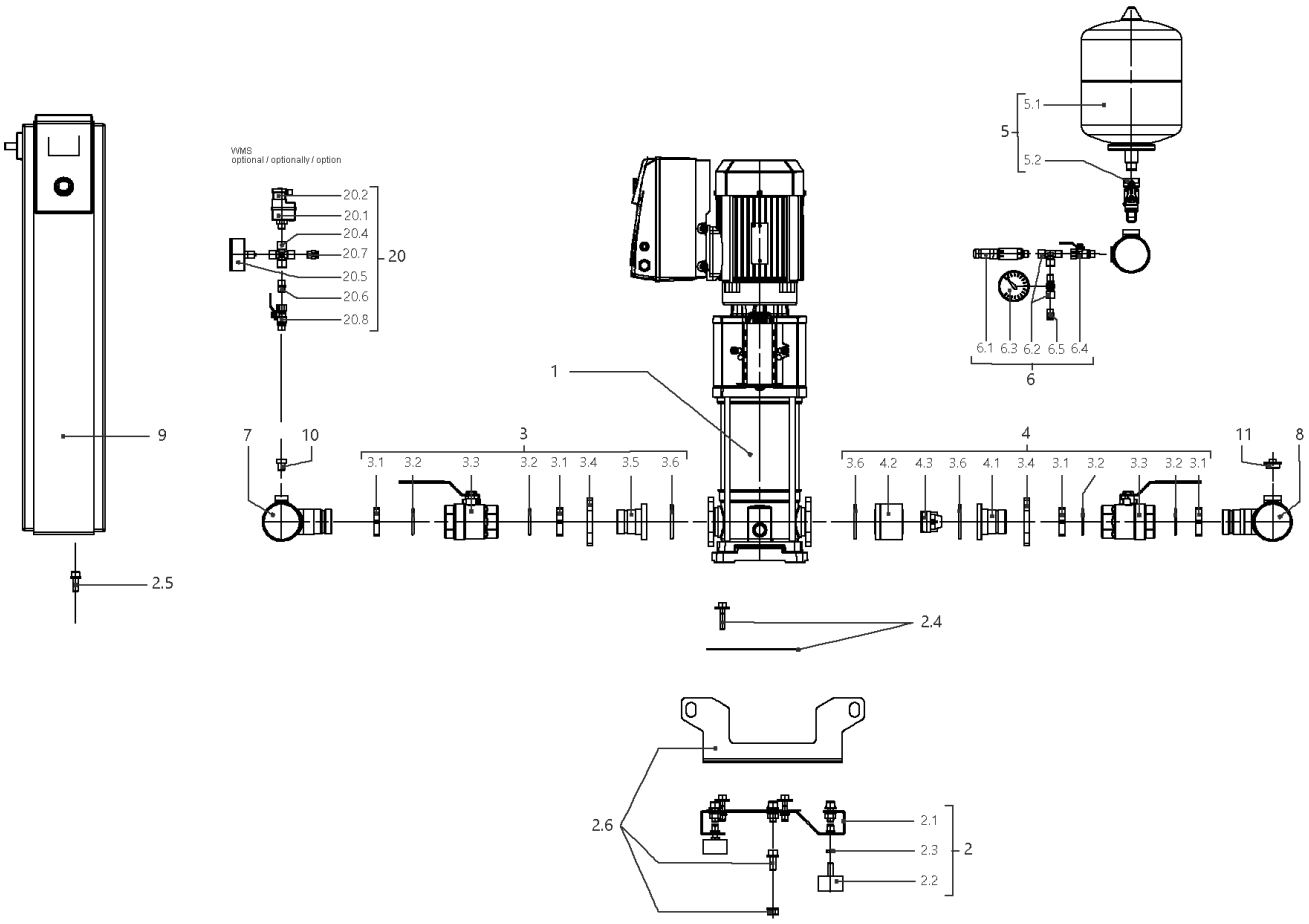
VVMS
optional / optionally / option
20.2
20.1
20.4
20.7
20.5
20.6
20.8
20
5.1
5
5.2
6.1 6.3 6.2 6.5 6.4
6
1
9
7
10
3
3.1 3.2 3.3 3.2 3.1 3.4 3.5 3.6
4
3.6 4.2 4.3 3.6 4.1 3.4 3.1 3.2 3.3 3.2 3.1
11
8
2.5
2.4
2.6
2.1
2.3
2.2
2

## SiBoost Smart 3HELIX VE1002 (2536349)

| Item | Article no. | Description | Quantity |
|---|---|---|---|
| 1 | | HELIX VE1002-1/16/E/S | 1 |
| Note: TO / BIS / JUSQU'AU 31/03/2016 | | | |
| 1 | 4201547 | HELIX VE1002-1/16/E/S | 1 |
| Note: FROM / AB / À PARTIR DU 01/04/2016 | | | |
| 2 | 4197116 | BASE PLATE DE3 1150x420 KIT | 1 |
| Note: TO / BIS / JUSQU'AU 28/02/2013 | | | |
| 2.1 | | > BASEPLATE_3x4/6/10/16V_E300_BOX_150 | 1 |
| 2.2 | 2028654 | > VIBRATION DAMPER D.50X30 M10X28 | 1 |
| 2.3 | 2028281 | > NUT M10 DIN936 (ISO4035) 17H VZ | 1 |
| 2.4 | 4197083 | > HOLDER PUMP Helix 10/16 KIT | 1 |
| 2.5 | 4197084 | > HOLDER SWITCHBOX WILO Smart Control KIT | 1 |
| 2.6 | 4197117 | > LIFTING Siboost HELIX SC KIT | 1 |
| 2 | 4200137 | BASE PLATE DE3 1150x300 M10 KIT | 1 |
| Note: FROM / AB / À PARTIR DU 01/03/2013 - TO / BIS / JUSQU'AU 06/02/2014 | | | |
| 2.1 | | > BASEPLATE_3x4/6/10V_E300_1150x300BOX_150 | 1 |
| 2.2 | 2028654 | > VIBRATION DAMPER D.50X30 M10X28 | 1 |
| 2.3 | 2028281 | > NUT M10 DIN936 (ISO4035) 17H VZ | 1 |
| 2.4 | 4199875 | > HOLDER PUMP Siboost Helix V2/4 KIT | 1 |
| 2.5 | 4197084 | > HOLDER SWITCHBOX WILO Smart Control KIT | 1 |
| 2.6 | 4197085 | > LIFTING Siboost HELIX SC KIT | 1 |
| 2 | 4197070 | BASE PLATE DE3 1150x420 M10 KIT | 1 |
| Note: FROM / AB / À PARTIR DU 07/02/2014 | | | |
| 2.1 | | > BASE DE3 HELIX 10 B150 G300 KPL.SMAR | 1 |
| 2.2 | 2028654 | > VIBRATION DAMPER D.50X30 M10X28 | 1 |
| 2.3 | 2028281 | > NUT M10 DIN936 (ISO4035) 17H VZ | 1 |
| 2.4 | 4197083 | > HOLDER PUMP Helix 10/16 KIT | 1 |
| 2.5 | 4197084 | > HOLDER SWITCHBOX WILO Smart Control KIT | 1 |
| 2.6 | 4197085 | > LIFTING Siboost HELIX SC KIT | 1 |
| 3 | 4197072 | SUCTION SIDE Siboost Helix10/16 KIT | 1 |
| 3.1 | 2032623 | > NUT G1 1/2"SW55 MS | 1 |
| 3.2 | 2032616 | > O-RING ID.44X3,53N DIN3771 E7502 | 1 |
| 3.2 | 2534877 | > BALL TAP KDW40-H G11/2I-I-DN40 DVGW | 1 |
| 3.4 | 2032626 | > OVAL FLANGE D52-LK100 ST-VZ | 1 |
| 3.5 | 2032627 | > UNION INSERT DN40 LAPPED FLANGE | 1 |

| Item | Article no. | Description | Quantity |
|---|---|---|---|
| 3.6 | 2032628 | > O-RING ID.56,52X5,33N DIN3771 E7502 | 1 |
| 4 | 4197074 | DELIVERY SIDE Siboost Helix V10 KIT | 1 |
| 3.1 | 2032623 | > NUT G1 1/2"SW55 MS | 1 |
| 3.2 | 2032616 | > O-RING ID.44X3,53N DIN3771 E7502 | 1 |
| 3.3 | 2534877 | > BALL TAP KDW40-H G11/2I-I-DN40 DVGW | 1 |
| 3.4 | 2032626 | > OVAL FLANGE D52-LK100 ST-VZ | 1 |
| 4.1 | 2054316 | > UNION INSERT DN40 LAPPED FLANGE(W.SLOT) | 1 |
| 4.2 | 2054317 | > HOUSING F.NON RETURN VALVE(RV-IN) DN40 | 1 |
| 4.3 | 2032631 | > NON-RETURN-DEVICE DN40 (MTR)TYP RV-IN | 1 |
| 3.6 | 2032628 | > O-RING ID.56,52X5,33N DIN3771 E7502 | 1 |
| 5 | 2032642 | DIAPHREM TANK 8L/PN16 DIN4807/T5 KIT | 1 |
| 5.1 | 2045914 | > DIAPHREM TANK 8L TYP-DD 16BAR | 1 |
| 5.2 | 2027853 | > FLOW FITTING G3/4 FOR DIAPHRAGM VES. | 1 |
| 6 | 4197076 | PRESSURE SENSOR/ GAUGE 0-16BAR KIT | 1 |
| 6.1 | 2085909 | > PRESS.SENSOR 1/4" 0-16BAR 4-20MA VP. | 1 |
| 6.2 | 4197077 | > T-PIECE 1/4" VP. | 1 |
| 6.3 | 2028692 | > PRESSURE GAUGE NG63-PN16-G1/4 | 1 |
| 6.4 | 2028291 | > BALL TAP R1/4" PN42 GIACOMINI R254DL | 1 |
| 6.5 | 2028691 | > BLOWGUN 1/4" MS 30BAR VP. | 1 |
| 7 | 4197078 | PIPE DE3 R21/2''-3x11/2"+2x1/4x900 VP. | 1 |
| 8 | 4197080 | PIPE DE3 R21/2''-3x11/2"+2x1/4+1x3/4x900 | 1 |
| 9 | | W-CTRL-SCE-B-3x1,1KW-T4-FM-ND2 | 1 |
| Note: TO / BIS / JUSQU'AU 28/02/2013 | | | |
| 9 | | W-CTRL-SCE-B-3x0,55-1,5KW-T4-FM-ND1 | 1 |
| Note: FROM / AB / À PARTIR DU 01/03/2013 - TO / BIS / JUSQU'AU 18/05/2014 | | | |
| 9 | 2541914 | W-CTRL-SCE-B-3x10A-T34-FM-ND1-AVC-PKG | 1 |
| Note: FROM / AB / À PARTIR DU 19/05/2014 | | | |
| 10 | 4197079 | PLUG G1/4"x10 AISI304 KIT | 1 |
| 11 | 2032654 | PLUG R3/4" MS VIEGA 1751 | 1 |
| 20 | 2521150 | ASSEMBLY WMS. DE-EB. +VP | 1 |
| 20.1 | 2028652 | > PRESSURE SWITCH PS3-ASR 1/(1,3) VP. | 1 |
| 20.2 | 2130983 | > PLUG PS3-415 WITH KABEL 1,5M 2NO VP. | 1 |
| 20.4 | 2028290 | > CROSSPIECE R1/4" MS-NICKEL | 1 |
| 20.5 | 2028687 | > PRESSURE GAUGE NG63 R1/4" HI.0-6BAR | 1 |

| Item | Article no. | Description | Quantity |
|---|---|---|---|
| 20.6 | 2054268 | > DUAL NIPPLE G1/4" x G1/4" MS VP. | 1 |
| 20.7 | 2028691 | > BLOWGUN 1/4" MS 30BAR VP. | 1 |
| 20.8 | 2028291 | > BALL TAP R1/4" PN42 GIACOMINI R254DL | 1 |

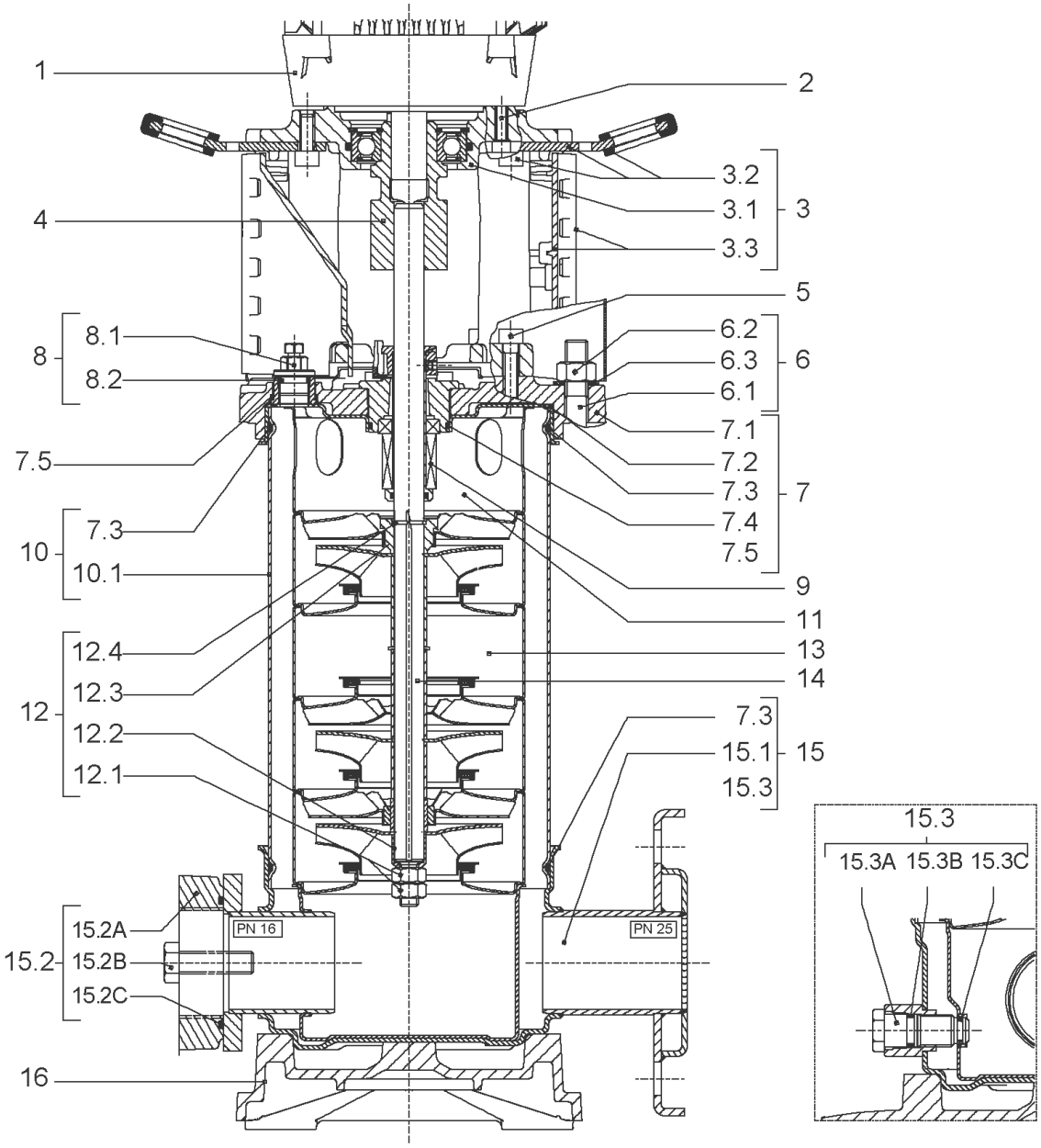
1
2
3.2
3.1
3
3.3
4
5
8.1
8
8.2
6.2
6.3
6
6.1
7.1
7.5
7.2
7.3
7
7.4
7.3
10
7.5
10.1
9
11
12.4
13
12.3
14
12
12.2
7.3
15.1
15
12.1
15.3
15.3
15.3A 15.3B 15.3C
15.2A
PN 16
PN 25
15.2
15.2B
15.2C
16

| Item | Article no. | Description | Quantity |
|---|---|---|---|
| 1 | | DRIVE HELIX-VE1002-IE2-WE KIT | 1 |
| Note: MOTOR BRAND WILO ELEC | | | |
| 1 | | DRIVE HELIX-VE1002-IE2-ATB KIT | 1 |
| Note: MOTOR BRAND ATB | | | |
| 1 | | DRIVE HELIX-VE1002-IE4-WE KIT | 1 |
| Note: MOTOR BRAND WILO ELEC | | | |
| 2 | 4159702 | SCREW M6X30 (4 PIECES) | 1 |
| 3 | 4172790 | EQUIPED LANTERN NEXIS FT 100 KIT | 1 |
| 3.1 | | > M+5_6_LANTERN_ONE-PIECE_FT100_CATA | 1 |
| 3.2 | 2127604 | > EYELET CPL.FT HELIX(2 PIECES) | 1 |
| 3.3 | 4159692 | > COUPLING PROTECTOR FT HELIX KIT | 1 |
| 4 | 4159708 | COUPLING D.16XD.19 FT100 HELIX KIT | 1 |
| 5 | 4159707 | SCREW M8X30 (4 PIECES) | 1 |
| 6 | 4177803 | STUD BOLT M12X263 KIT | 1 |
| 6.1 | | > TIE BOLT M12-263x18x30-1.4057 | 1 |
| 6.2 | 2094647 | > NUT M12 M12 ISO4032 VP. | 1 |
| 6.3 | 2123557 | > WASHER CS-12.4-24-1.6-NFE25 (4 PIECES) | 1 |
| 7 | 4210143 | STATIONARY RING HOLDER HELIX 6" EPDM | 1 |
| 7.2 | 2127607 | > STATIONARY RING HOLDER 6" HELIX 1.4301 V | 1 |
| 7.3 | 4176513 | > O-RING FOR PUMP JACKET VP. | 1 |
| 7.4 | 2127603 | > O-RING ID.37,6x2,4 EPDM VP. | 1 |
| 7.5 | 2127602 | > O-RING ID.21,35x2 EPDM VP. | 1 |
| 8 | 4159686 | FILING/PURGING PLUG HELIX EPDM KIT | 1 |
| 9 | 4171327 | SEAL-KIT-HELIX6-10-16 O/E KIT | 1 |
| 10 | 4177804 | HOUSING PIPES D.152X134 1.4301 KIT | 1 |
| 7.3 | 4176513 | > O-RING FOR PUMP JACKET VP. | 1 |
| 10.1 | | > HOUSING-PIPE Ø152-M+1001/02-304 | 1 |
| 11 | 4172791 | CENTERING STAGE-RETURN HELIX10 1.4301VP. | 1 |
| 12 | 4209273 | SHAFT EQUIPMENT HELIX V10 KIT | 1 |
| 12.1 | | > NUT-H-M10-A4.70 | 1 |
| 12.2 | | > SERRATED LOCK WASHER M+10M3-316L | 1 |
| 12.3 | | > IMPELLER STOP RING L33,6-304 | 1 |
| 12.4 | | > STOP-RUSH-1/2-D16xd2-M+316 | 1 |
| 13 | | HYDRAULIC HELIX V 1002 1.4307 | 1 |

| Item | Article no. | Description | Quantity |
|---|---|---|---|
| 14 | 4177807 | SHAFT D.16X255 1.4301 VP. | 1 |
| 15 | 4159682 | PUMP HOUSING HELIX DN50 PN16 1.4301 KIT | 1 |
| 7.3 | 4176513 | > O-RING FOR PUMP JACKET VP. | 1 |
| 15.1 | | > BLASTING PPE HOUSING V-PN16-DN50-304 | 1 |
| 15.2 | 4217893 | > COUNTER FLANGE-G1"1/2-PN16-GJL KIT | 1 |
| 15.3 | 4171321 | > PRIMING/DRAIN PLUG EPDM HELIX KIT | 1 |
| 16 | 4176517 | BASEPLATE V8/10 VP. | 1 |

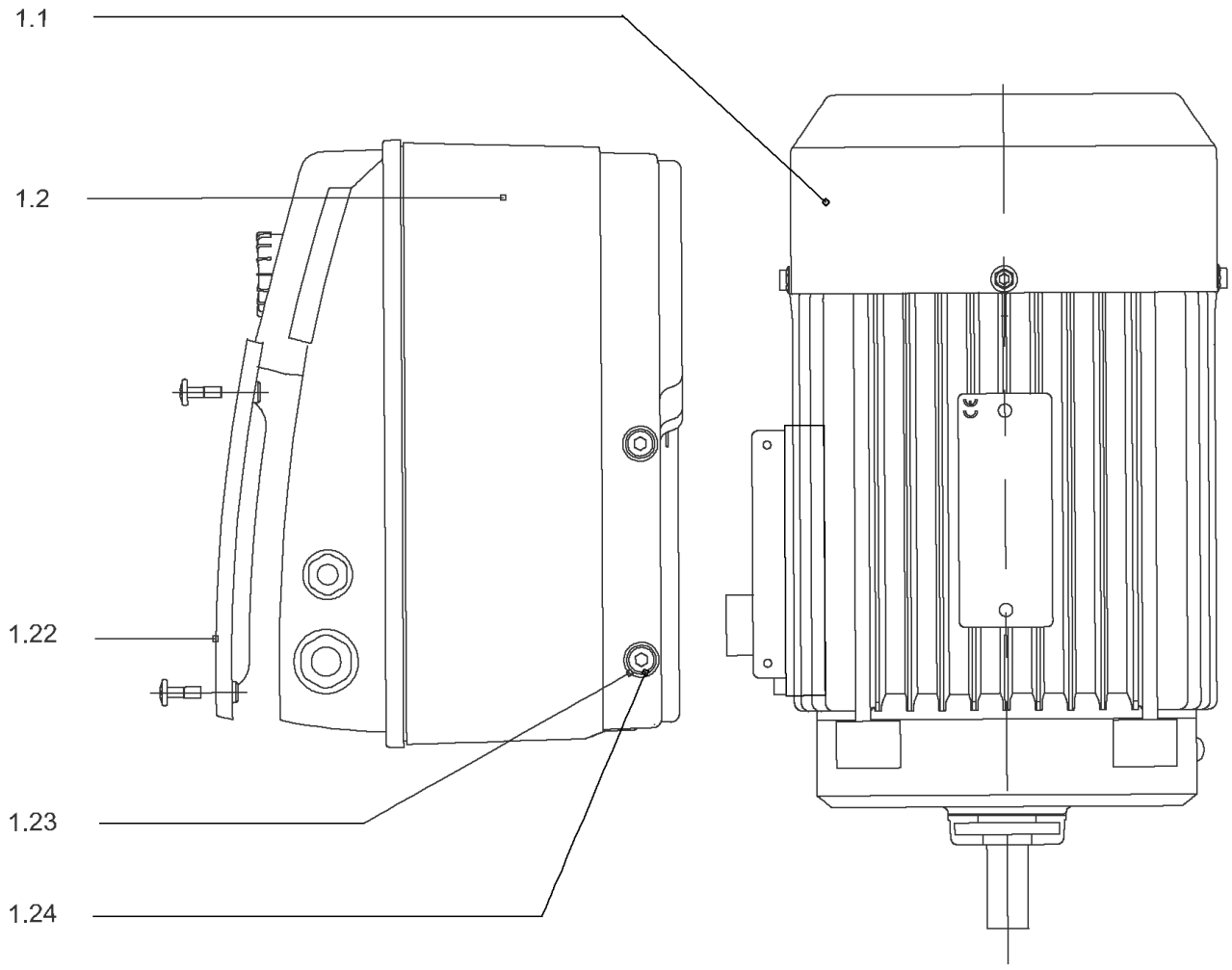
1.1
1.2
1.22
1.23
1.24

## DRIVE HELIX-VE1002-IE2-WE KIT

| Item | Article no. | Description | Quantity |
|---|---|---|---|
| 1.1 | 4184817 | MOTOR 1,1/2/80 3~ 380V 60HZ IE2 WE VP. | 1 |
| | | SPARE PARTS MOTOR:ON REQUEST | 1 |
| 1.2 | 4186942 | MODULE HELIX-VE1002-IE2-WE KIT | 1 |
| 1.22 | 2054372 | > MODULE COVER TL1,TL2+GASKET KIT | 1 |
| 1.23 | 4215716 | > SCREW M5X16 DIN912 8.8 A2A (4pieces) VP. | 1 |
| 1.24 | 2057978 | > RONDELLE A5,3 DIN6797 FST ZN (4 PIECES) | 1 |

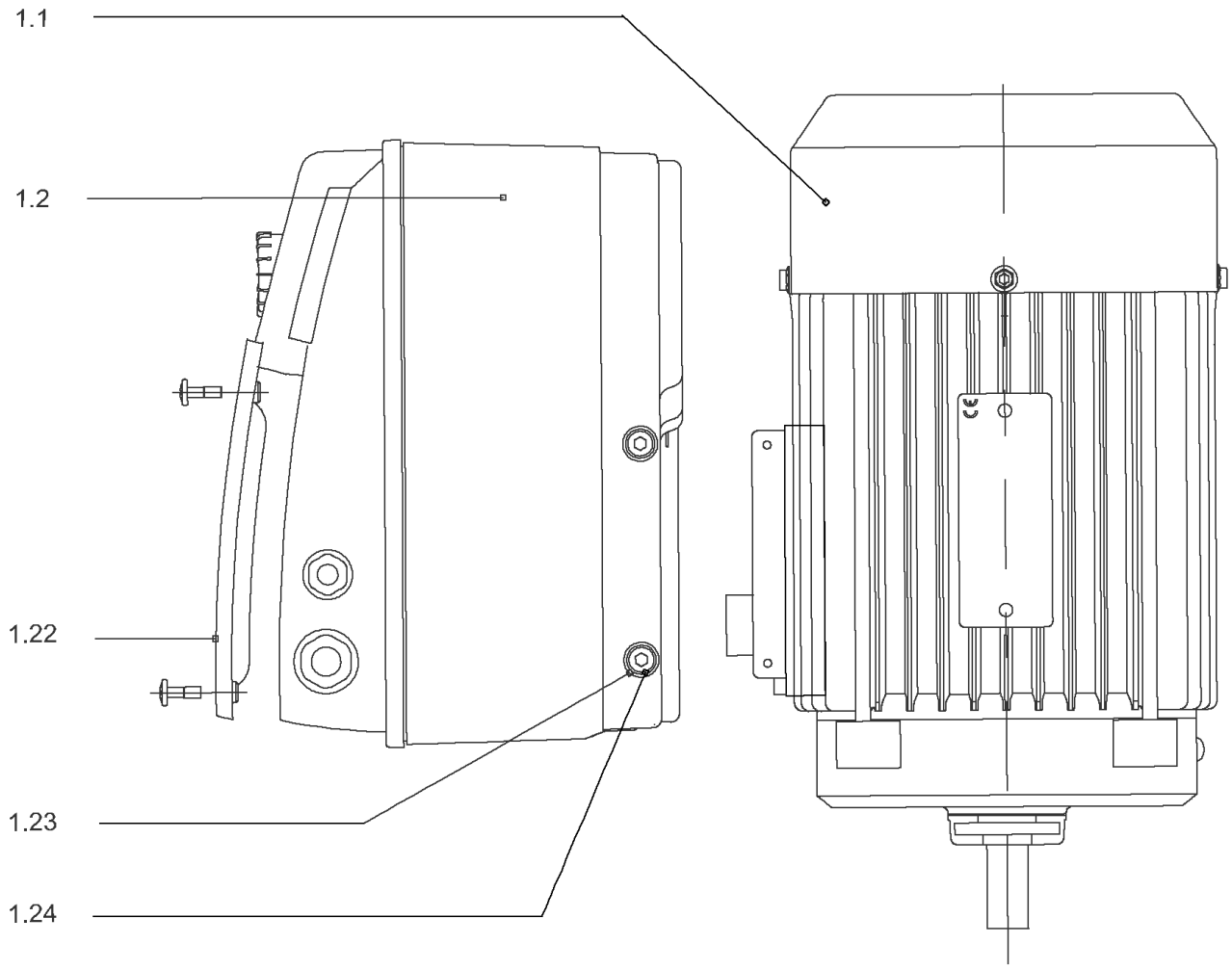
1.1
1.2
1.22
1.23
1.24

## DRIVE HELIX-VE1002-IE2-ATB KIT

| Item | Article no. | Description | Quantity |
|---|---|---|---|
| 1.1 | | M1,1-2T638P55V18-80F10-SU-N19-ADAPT-IE2 | 1 |
| Note: no longer available/nicht mehrlieferbar/n'est plus disponible | | | |
| | | SPARE PARTS MOTOR:ON REQUEST | 1 |
| 1.2 | 4228815 | MODULE HELIX-VE1002-IE2-ATB KIT | 1 |
| 1.22 | 2054372 | > MODULE COVER TL1,TL2+GASKET KIT | 1 |
| 1.23 | 4215716 | > SCREW M5X16 DIN912 8.8 A2A (4pieces) VP. | 1 |
| 1.24 | 2057978 | > RONDELLE A5,3 DIN6797 FST ZN (4 PIECES) | 1 |

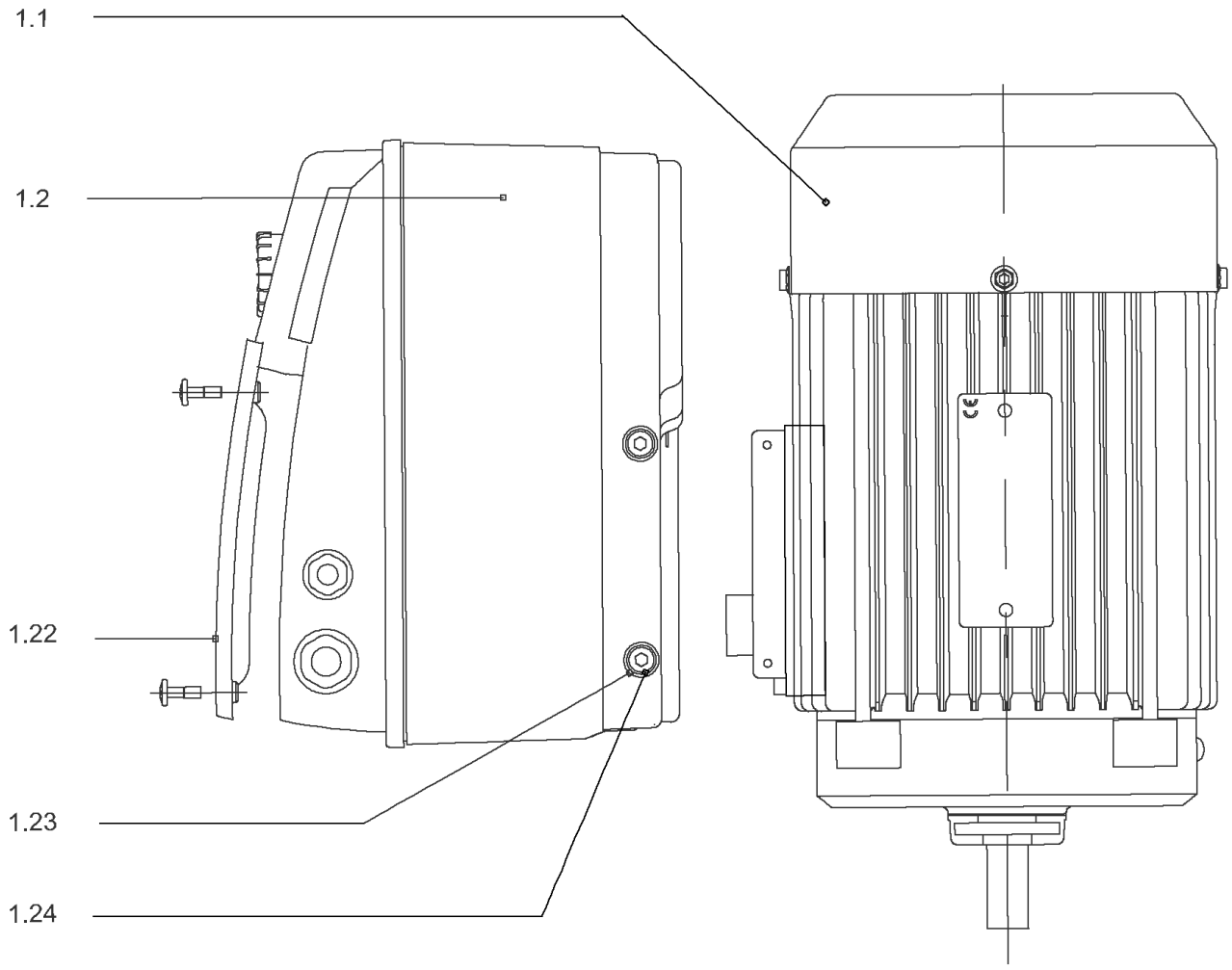
1.1
1.2
1.22
1.23
1.24

## DRIVE HELIX-VE1002-IE4-WE KIT

| Item | Article no. | Description | Quantity |
|---|---|---|---|
| 1.1 | 4207916 | MOTOR 1.1/2/80 3~ 380V 60HZ IE4 WE VP. | 1 |
| | | SPARE PARTS MOTOR:ON REQUEST | 1 |
| 1.2 | 4209600 | MODULE HELIX-VE1002-IE4-WE KIT | 1 |
| 1.22 | 2054372 | > MODULE COVER TL1,TL2+GASKET KIT | 1 |
| 1.23 | 4215716 | > SCREW M5X16 DIN912 8.8 A2A (4pieces) VP. | 1 |
| 1.24 | 2057978 | > RONDELLE A5,3 DIN6797 FST ZN (4 PIECES) | 1 |

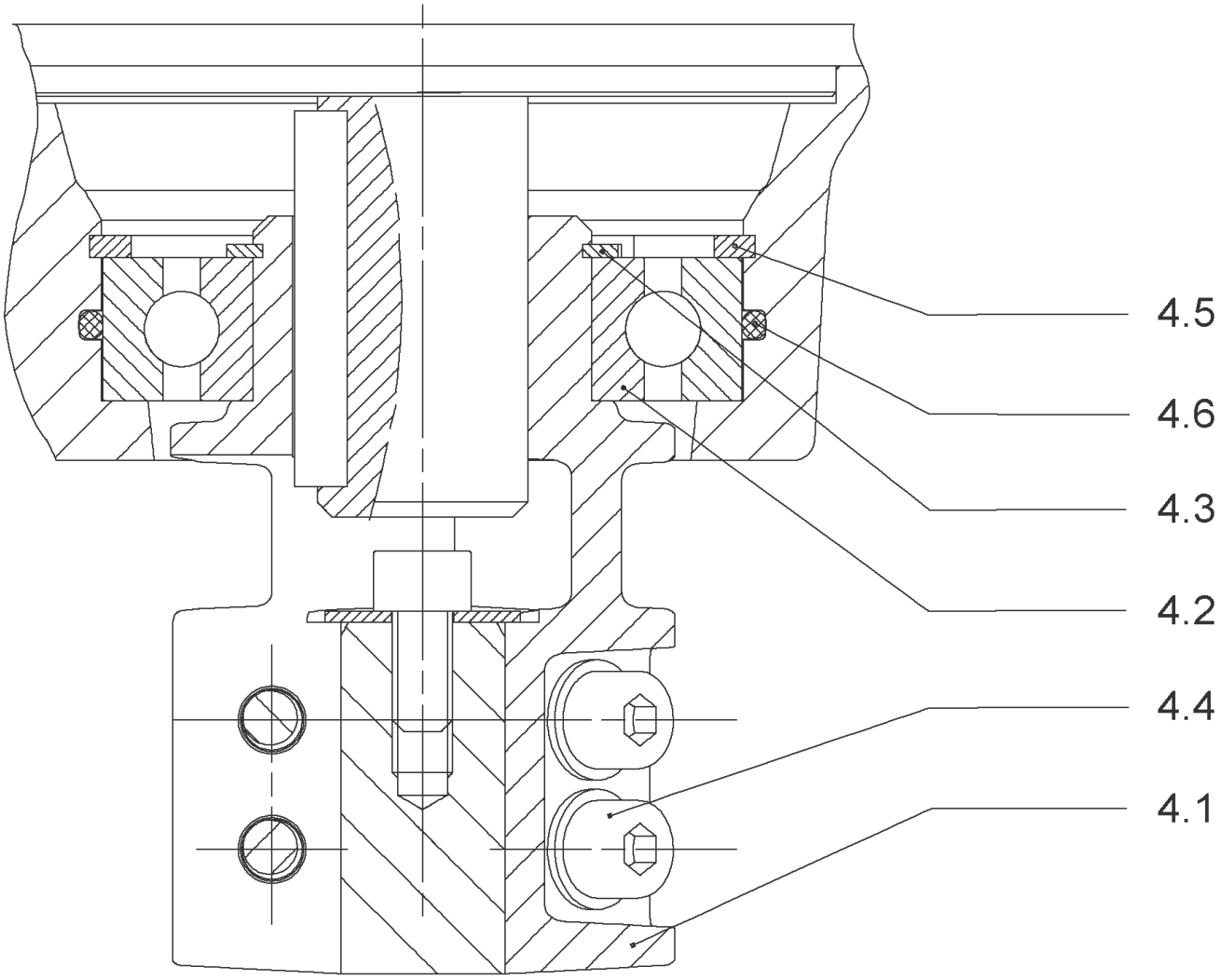
4.5
4.6
4.3
4.2
4.4
4.1

## COUPLING D.16XD.19 FT100 HELIX KIT (4159708)

| Item | Article no. | Description | Quantity |
|---|---|---|---|
| 4.1 | | COUPLING M+ Ø16XØ19 FT100 MACHINED | 1 |
| 4.2 | 2130977 | BALL BEARING 6206/ZZ-C3(HT)VP. | 1 |
| 4.3 | 4234249 | CIRCLIP-FOR-SHAFT-D30x1.5 VP. | 1 |
| 4.4 | 4212716 | SCREW M6X20 KIT (4PIECES) | 1 |
| 4.5 | 4234250 | CIRCLIP-D62x2 VP. | 1 |
| 4.6 | 4234245 | O-RING 63X3 VP. | 1 |
| | | CONTACT-WASHER-6ETR-6,1x12,2x1,8-STEEL | 1 |

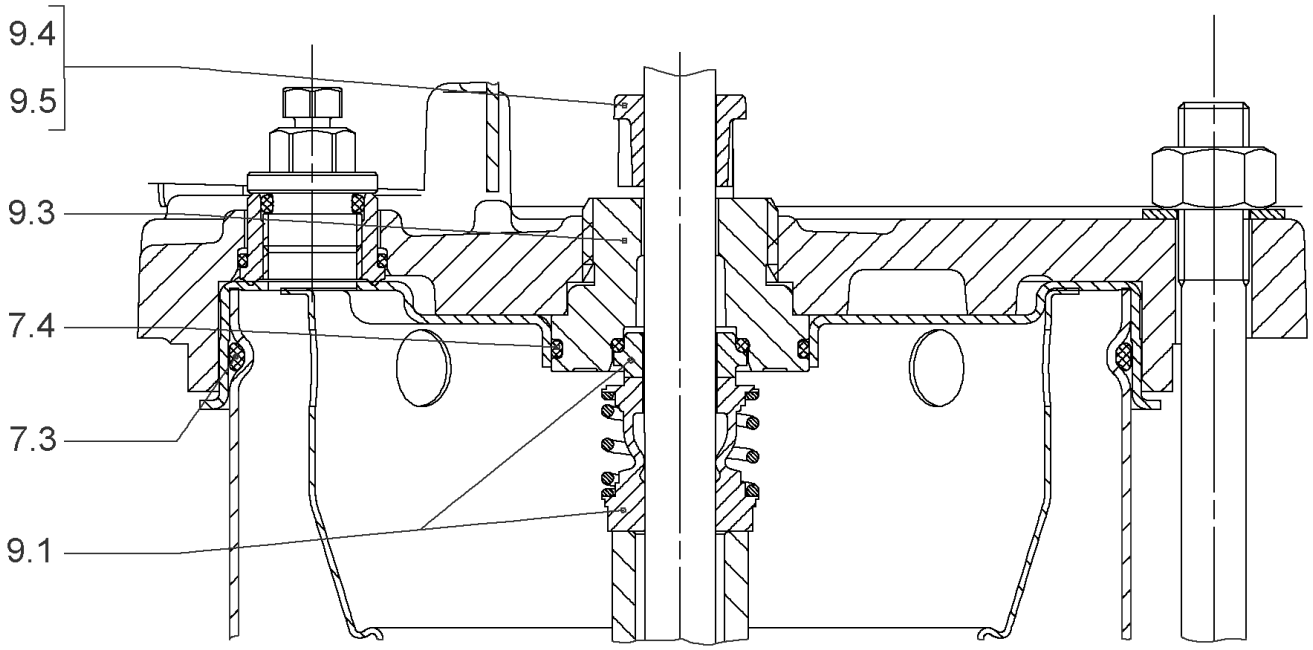
9.4
9.5
9.3
7.4
7.3
9.1

## SEAL-KIT-HELIX6-10-16 O/E KIT (4171327)

| Item | Article no. | Description | Quantity |
|---|---|---|---|
| 7.3 | 4176513 | O-RING FOR PUMP JACKET VP. | 1 |
| 7.4 | 2127603 | O-RING ID.37,6x2,4 EPDM VP. | 1 |
| 9.1 | 4177801 | MECH.SEAL HELIX6-10-16 O/E VP. | 1 |
| 9.3 | 4177798 | MACHINED RING HOLDER M+6" Ø16 304 VP. | 1 |
| 9.5 | 4177799 | MACHINED DRIVE RING Ø16 VP. | 1 |
| 9.4 | 4176520 | SCREW CH M5x5 A4-70 ( 3PIECES ) | 1 |

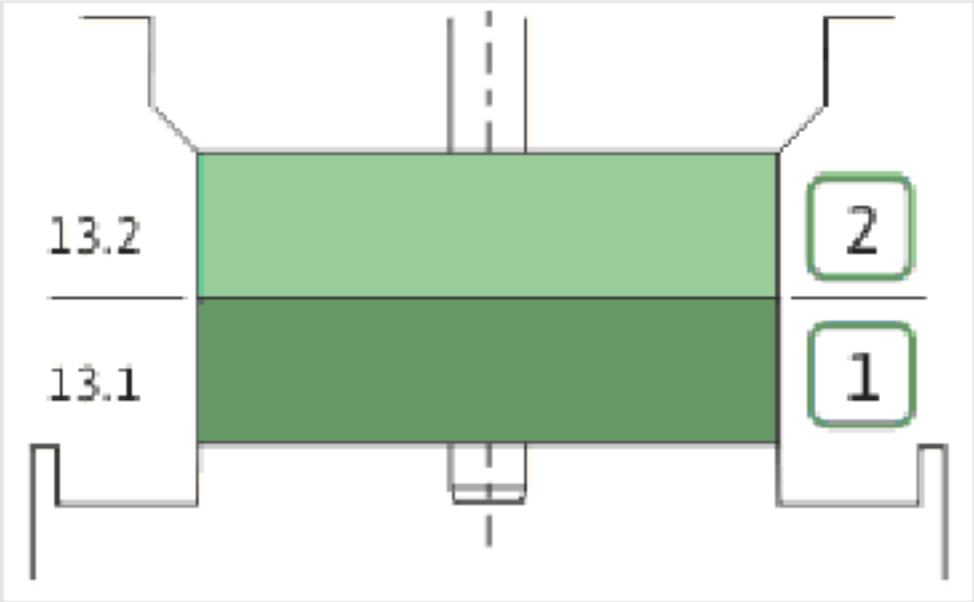
13.2
13.1
2
1

| Item | Article no. | Description | Quantity |
|---|---|---|---|
| 13.1 | 4171331 | STAGE HELIX10 1.4301KIT | 1 |
| | | > MACH.STG-CASING-WOGV-WNR-M+10-304 | 1 |
| | | > IMPELLER-M+10-304 | 1 |
| 13.2 | 4172792 | INTERMEDIATE STAGE HELIX 10 1.4301 KIT | 1 |
| | | > MACH.BEARING-STG-CASING-WNR-M+10-304 | 1 |
| | | > IMPELLER-M+10-304 | 1 |
| | | > SHAFT SLEEVE-SPACER-Ø19,35x18,465-304 | 1 |
| | | > SHAFT-SLEEVE-D16xD20x18-CW | 1 |

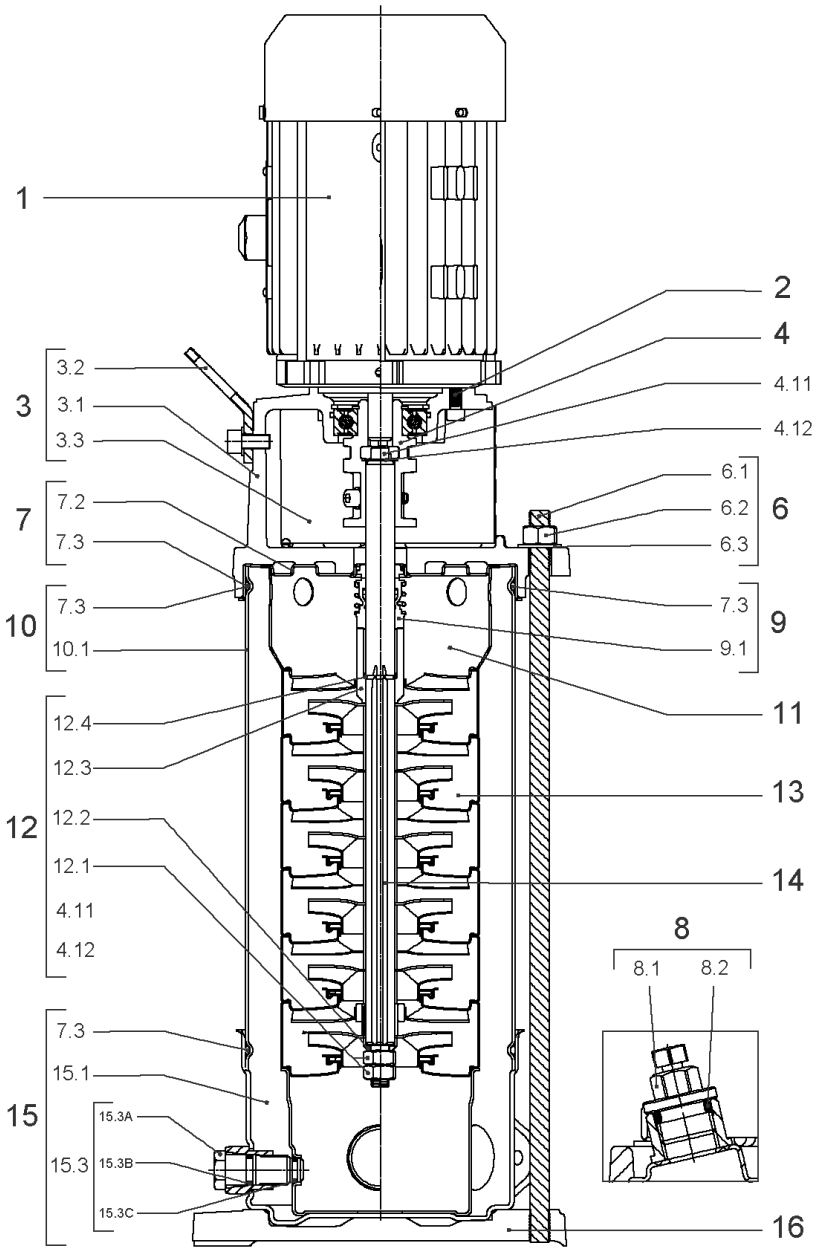
1
2
4
4.11
4.12
3
3.2
3.1
3.3
7
7.2
7.3
10
7.3
10.1
6
6.1
6.2
6.3
9
7.3
9.1
11
12
12.4
12.3
12.2
12.1
4.11
4.12
13
14
8
8.1
8.2
15
7.3
15.1
15.3
15.3A
15.3B
15.3C
16

## HELIX VE1002-1/16/E/S (4201547)

| Item | Article no. | Description | Quantity |
|---|---|---|---|
| 1 | | DRIVE HELIX-VE1002-IE4-WE KIT | 1 |
| Note: MOTOR BRAND WILO ELEC | | | |
| | | SPARE PARTS MOTOR:ON REQUEST | 1 |
| 2 | 4212716 | SCREW M6X20 KIT (4PIECES) | 1 |
| 3 | 4213752 | LANTERN FT100 HELIX KIT | 1 |
| 3.1 | | > LANT-MOT-VMI-ReDTC6"-FT100-MACHINED+CATA | 1 |
| 3.2 | 4184852 | > EYELET CPL.FT HELIX (2 PIECES) | 1 |
| 3.3 | 4213713 | > COUPLING PROTECTOR FT85/100 HELIX KIT | 1 |
| 4 | 4159708 | COUPLING D.16XD.19 FT100 HELIX KIT | 1 |
| 6 | 4177803 | STUD BOLT M12X263 KIT | 1 |
| 6.1 | | > TIE BOLT M12-263x18x30-1.4057 | 1 |
| 6.2 | 2094647 | > NUT M12 M12 ISO4032 VP. | 1 |
| 6.3 | 2123557 | > WASHER CS-12.4-24-1.6-NFE25 (4 PIECES) | 1 |
| 7 | 4214481 | STATIONARY RING HOLDER HELIX D27 ReDTC | 1 |
| 7.2 | 4214479 | > STATIONARY RING HOLDER HELIX D27 VP. | 1 |
| 7.3 | 4176513 | > O-RING FOR PUMP JACKET VP. | 1 |
| 8 | 4212724 | FILING/PURGING PLUG HELIX ReDTC KIT | 1 |
| 8.1 | | > FILLING PLUG MVI6"-304 | 1 |
| 8.2 | 4177800 | > O-RING EPDM PLUG HELIX VP. | 1 |
| 9 | 4214483 | MECH.SEAL HELIX6-10-16 O/E ReDTC KIT | 1 |
| 9.1 | 4177801 | > MECH.SEAL HELIX6-10-16 O/E VP. | 1 |
| 7.3 | 4176513 | > O-RING FOR PUMP JACKET VP. | 1 |
| 10 | 4177804 | HOUSING PIPES D.152X134 1.4301 KIT | 1 |
| 7.3 | 4176513 | > O-RING FOR PUMP JACKET VP. | 1 |
| 10.1 | | > HOUSING-PIPE Ø152-M+1001/02-304 | 1 |
| 11 | 4172791 | CENTERING STAGE-RETURN HELIX10 1.4301VP. | 1 |
| 12 | 4214517 | SHAFT EQUIPMENT HELIX V10 ReDTC KIT | 1 |
| 12.1 | | > NUT-H-M10-A4.70 | 1 |
| 12.2 | | > SERRATED LOCK WASHER M+10M3-316L | 1 |
| 12.3 | | > 1/2-SNAP-RING-6/10M3-316L | 1 |
| 12.4 | | > STOP-RUSH-1/2-D16xd2-M+316 | 1 |
| 4.11 | | > SCREW CHC-M6X14-8.8-ISO4762-GEOMET500A | 1 |
| 4.12 | | > WASHER D.24 L6U ZINK | 1 |
| 13 | | HYDRAULIC HELIX V 1002 1.4307 | 1 |

| Item | Article no. | Description | Quantity |
|---|---|---|---|
| 14 | 4214488 | SHAFT D.16X203 HELIX 1.4057 VP. | 1 |
| 15 | 4159682 | PUMP HOUSING HELIX DN50 PN16 1.4301 KIT | 1 |
| 7.3 | 4176513 | > O-RING FOR PUMP JACKET VP. | 1 |
| 15.1 | | > BLASTING PPE HOUSING V-PN16-DN50-304 | 1 |
| 15.2 | 4217893 | > COUNTER FLANGE-G1"1/2-PN16-GJL KIT | 1 |
| 15.3 | 4171321 | > PRIMING/DRAIN PLUG EPDM HELIX KIT | 1 |
| 16 | 4176517 | BASEPLATE V8/10 VP. | 1 |

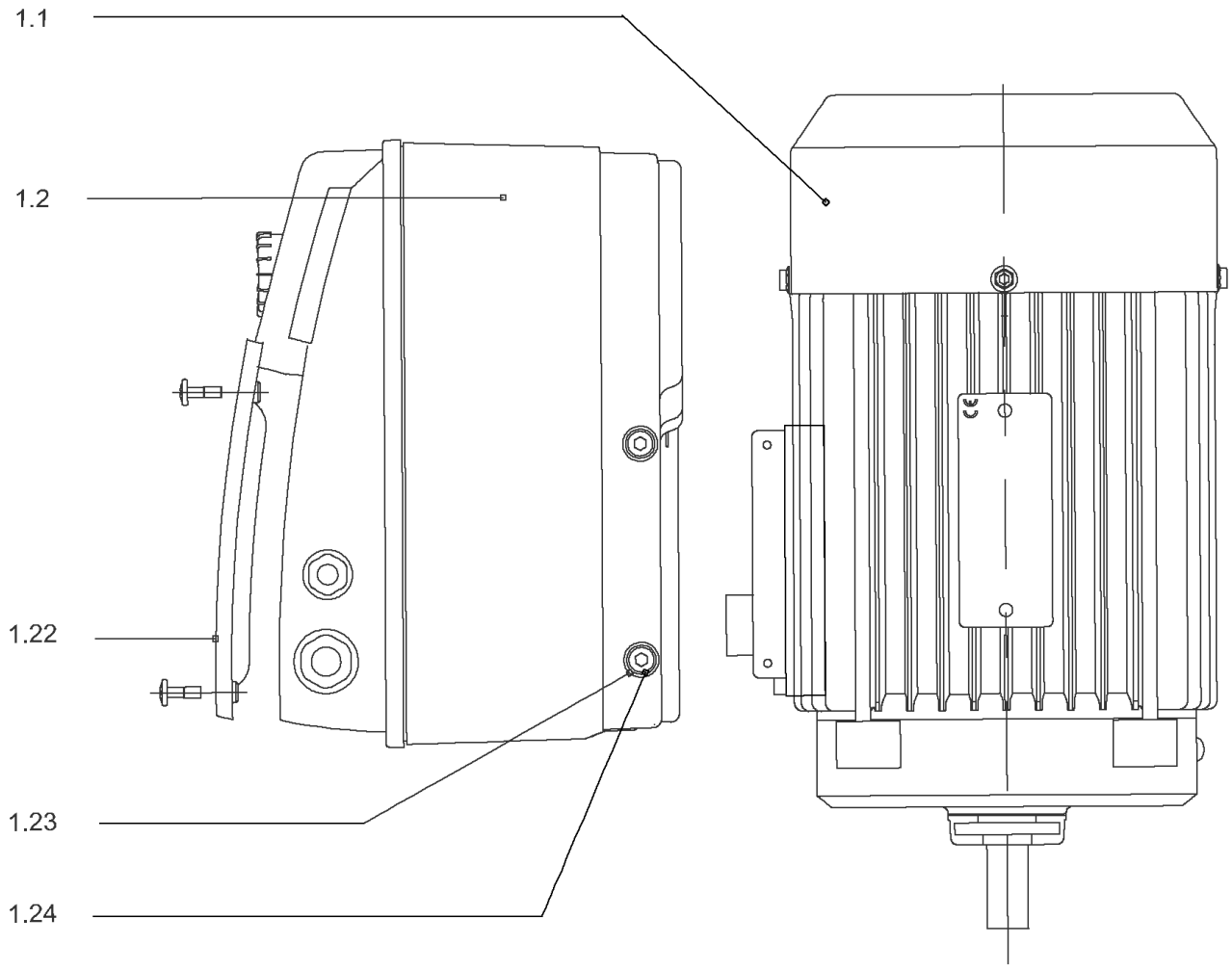
1.1
1.2
1.22
1.23
1.24

## DRIVE HELIX-VE1002-IE4-WE KIT

| Item | Article no. | Description | Quantity |
|---|---|---|---|
| 1.1 | 4207916 | MOTOR 1.1/2/80 3~ 380V 60HZ IE4 WE VP. | 1 |
| | | SPARE PARTS MOTOR:ON REQUEST | 1 |
| 1.2 | 4209600 | MODULE HELIX-VE1002-IE4-WE KIT | 1 |
| 1.22 | 2054372 | > MODULE COVER TL1,TL2+GASKET KIT | 1 |
| 1.23 | 4215716 | > SCREW M5X16 DIN912 8.8 A2A (4pieces) VP. | 1 |
| 1.24 | 2057978 | > RONDELLE A5,3 DIN6797 FST ZN (4 PIECES) | 1 |

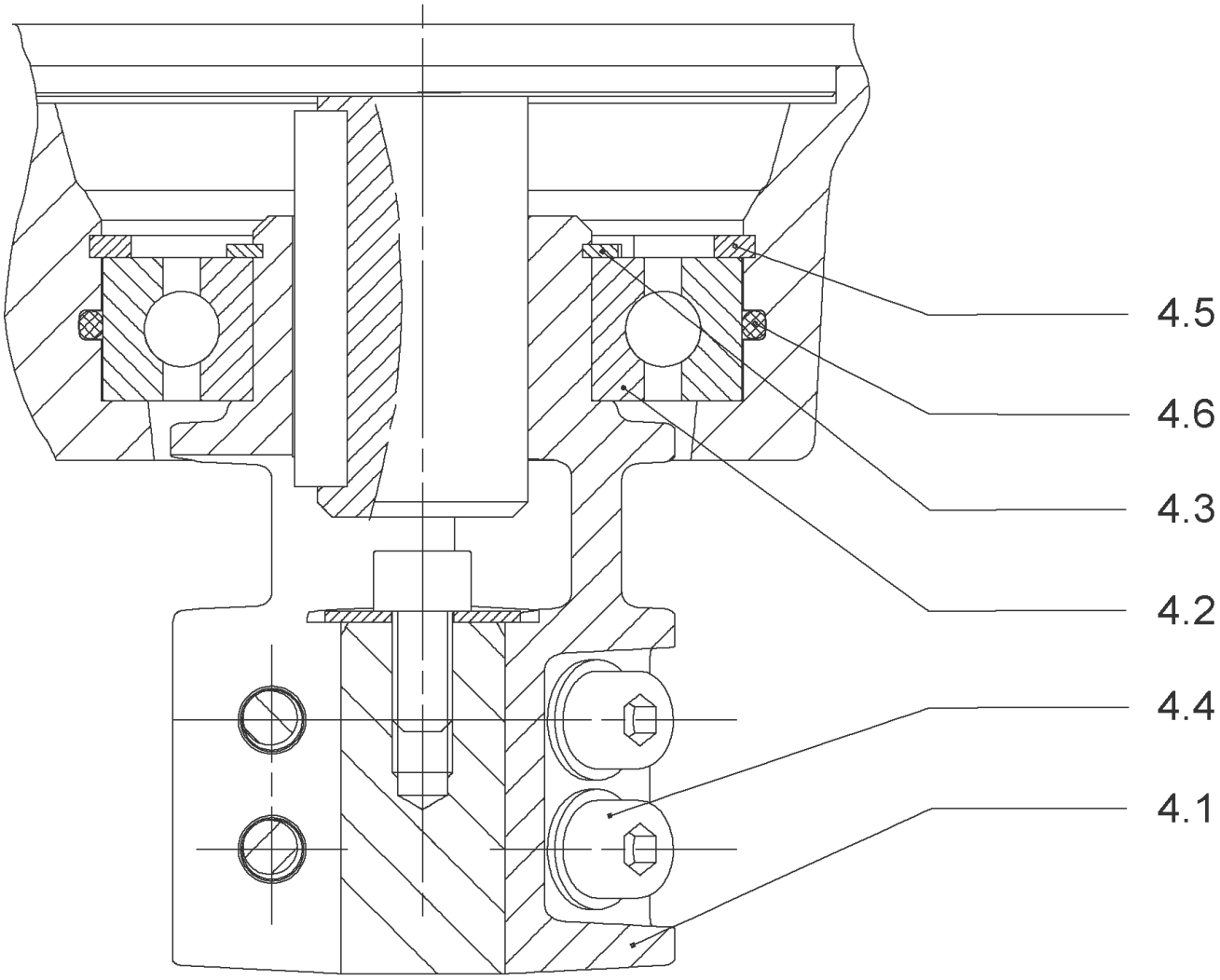
4.5
4.6
4.3
4.2
4.4
4.1

## COUPLING D.16XD.19 FT100 HELIX KIT (4159708)

| Item | Article no. | Description | Quantity |
|---|---|---|---|
| 4.1 | | COUPLING M+ Ø16XØ19 FT100 MACHINED | 1 |
| 4.2 | 2130977 | BALL BEARING 6206/ZZ-C3(HT)VP. | 1 |
| 4.3 | 4234249 | CIRCLIP-FOR-SHAFT-D30x1.5 VP. | 1 |
| 4.4 | 4212716 | SCREW M6X20 KIT (4PIECES) | 1 |
| 4.5 | 4234250 | CIRCLIP-D62x2 VP. | 1 |
| 4.6 | 4234245 | O-RING 63X3 VP. | 1 |
| | | CONTACT-WASHER-6ETR-6,1x12,2x1,8-STEEL | 1 |

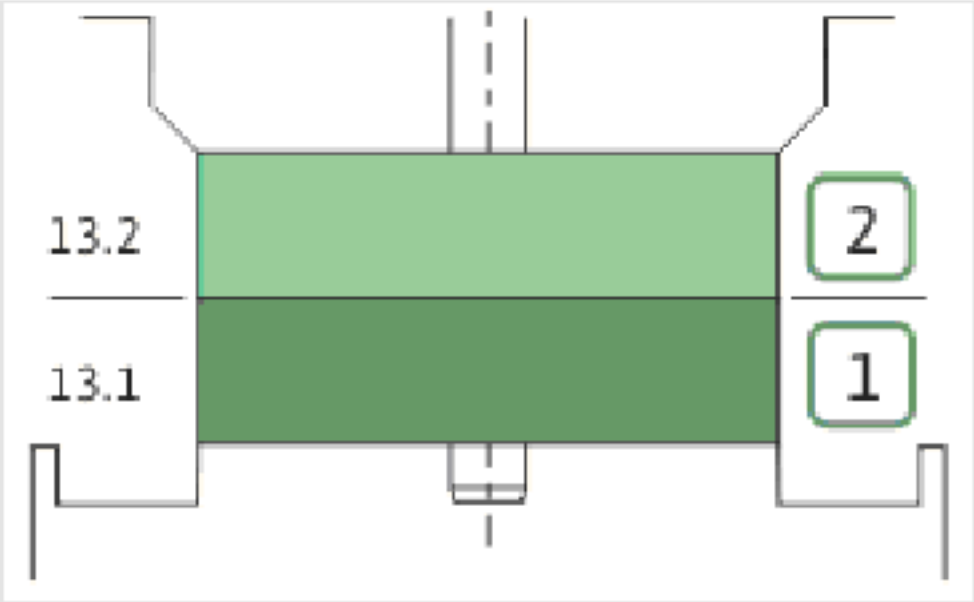
13.2
13.1
2
1

| Item | Article no. | Description | Quantity |
|---|---|---|---|
| 13.1 | 4171331 | STAGE HELIX10 1.4301KIT | 1 |
| | | > MACH.STG-CASING-WOGV-WNR-M+10-304 | 1 |
| | | > IMPELLER-M+10-304 | 1 |
| 13.2 | 4172792 | INTERMEDIATE STAGE HELIX 10 1.4301 KIT | 1 |
| | | > MACH.BEARING-STG-CASING-WNR-M+10-304 | 1 |
| | | > IMPELLER-M+10-304 | 1 |
| | | > SHAFT SLEEVE-SPACER-Ø19,35x18,465-304 | 1 |
| | | > SHAFT-SLEEVE-D16xD20x18-CW | 1 |

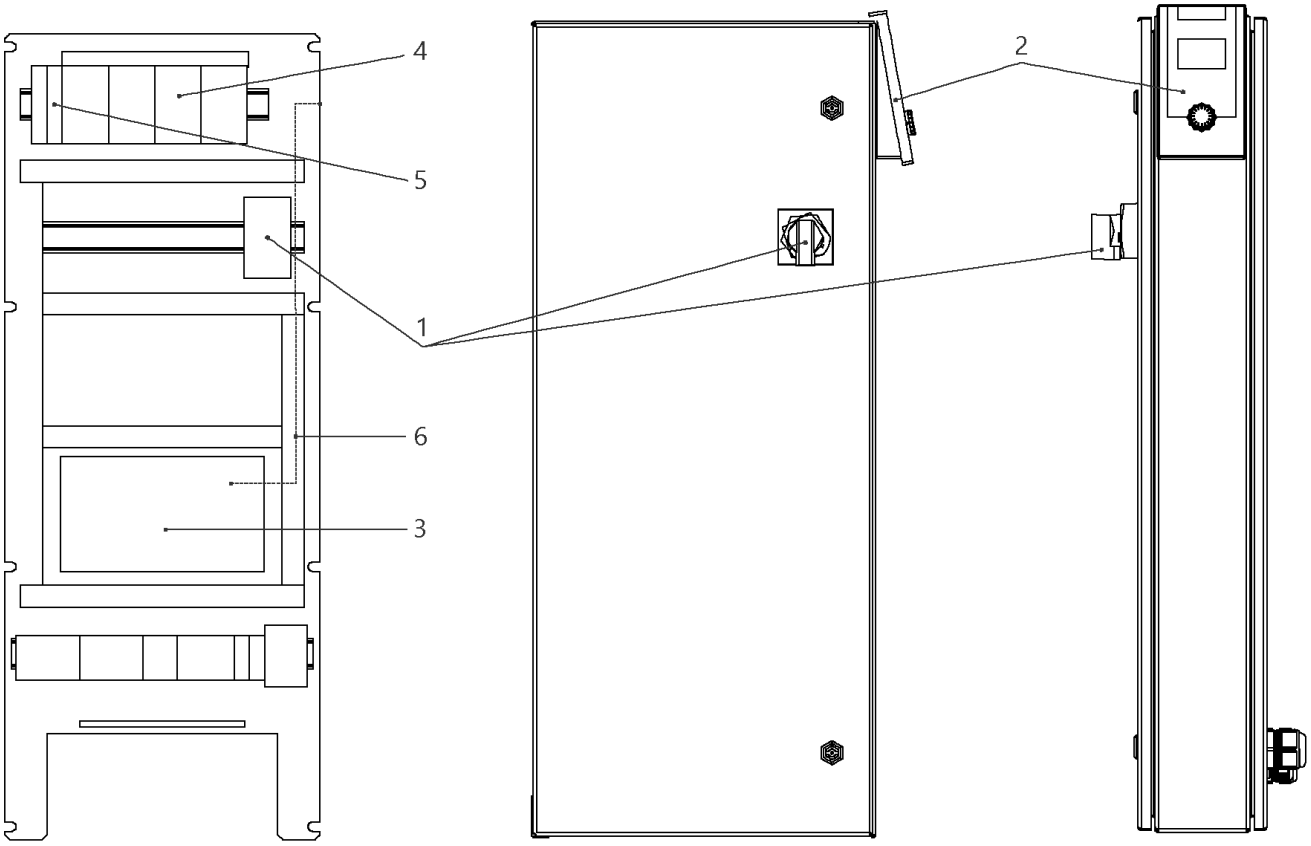
4
5
1
6
3
2

## W-CTRL-SCE-B-3x1,1KW-T4-FM-ND2

| Item | Article no. | Description | Quantity |
|---|---|---|---|
| 1 | 2104470 | MAIN SWITCH OT40F3 L250 KIT | 1 |
| 2 | 4184784 | CONTROL PANEL HMI SC KIT | 1 |
| 2 | 4185259 | ASSEMBLY DISPLAY SC PKG VP. | 1 |
| 3 | 4185257 | ASSEMBLY CPU SCe Booster VP. | 1 |
| 4 | 2051217 | AUTOM.CIRCUIT BREAKER S203 B16 TO7,5kW | 1 |
| 5 | 2046288 | CIRCUIT BREAKER S201 B16 | 1 |
| 6 | 4194956 | PATCH CABLE RJ45 CAT6 1,0M BLUE SC-PANEL | 1 |

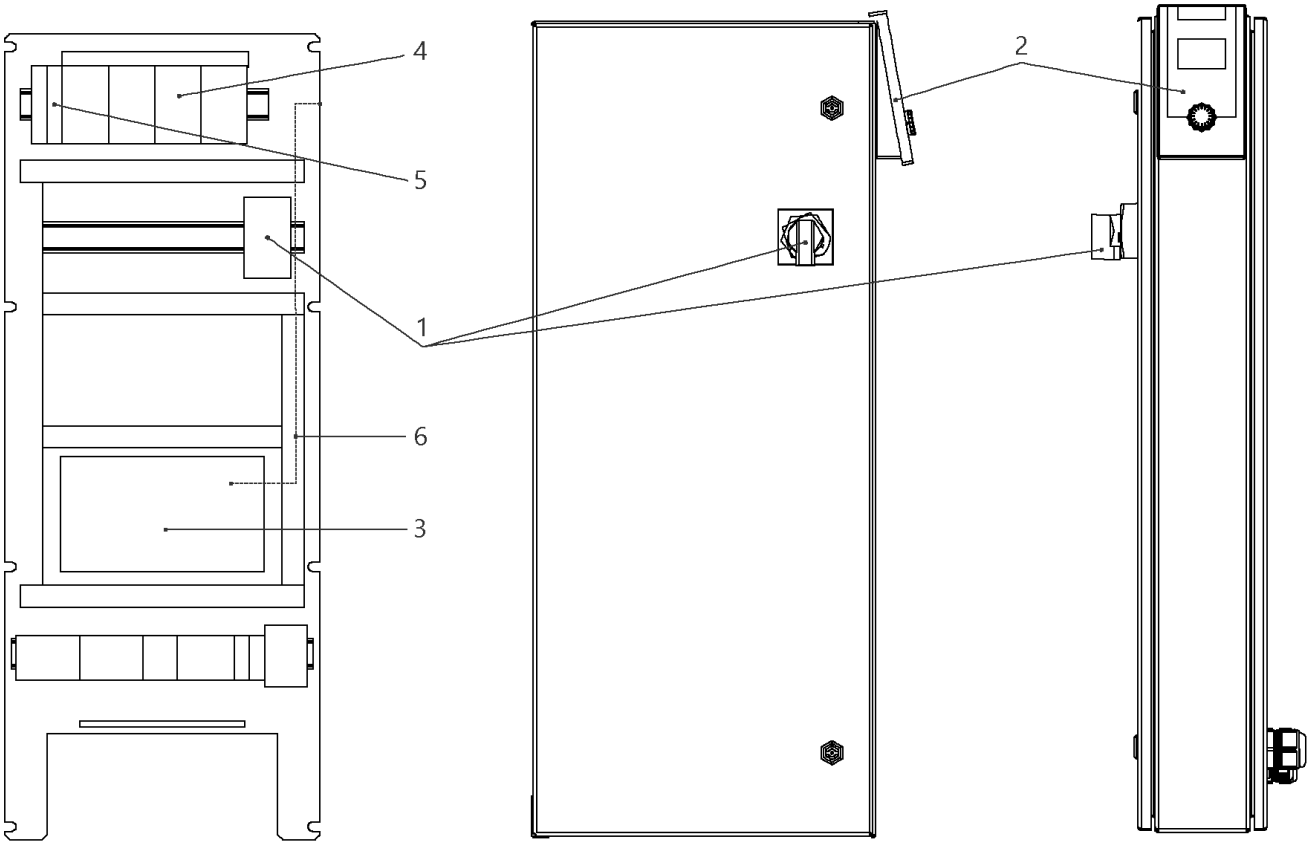
4
5
1
6
3
2

## W-CTRL-SCE-B-3x0,55-1,5KW-T4-FM-ND1

| Item | Article no. | Description | Quantity |
|---|---|---|---|
| 1 | 2104470 | MAIN SWITCH OT40F3 L250 KIT | 1 |
| 2 | 4184784 | CONTROL PANEL HMI SC KIT | 1 |
| 2 | 4185259 | ASSEMBLY DISPLAY SC PKG VP. | 1 |
| 3 | 4185257 | ASSEMBLY CPU SCe Booster VP. | 1 |
| 4 | 2051217 | AUTOM.CIRCUIT BREAKER S203 B16 TO7,5kW | 1 |
| 5 | 2046288 | CIRCUIT BREAKER S201 B16 | 1 |
| 6 | 4197081 | CABLE RJ45 CAT6 0,5M RED SC-PANEL VP. | 1 |

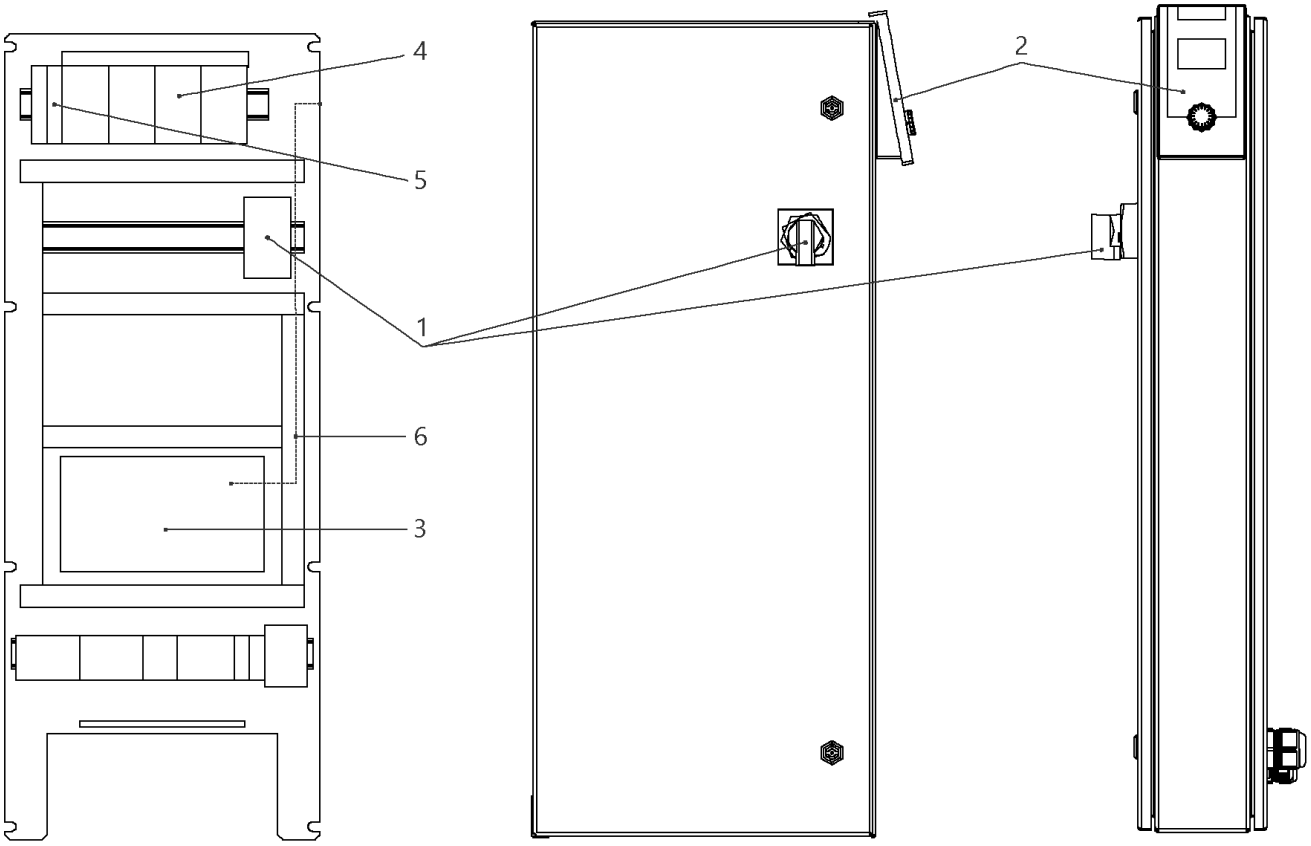
4
5
1
6
3
2

## W-CTRL-SCE-B-3x10A-T34-FM-ND1-AVC-PKG (2541914)

| Item | Article no. | Description | Quantity |
|---|---|---|---|
| 1 | 2104473 | MAIN SWITCH OT63F3 L105 KIT | 1 |
| Note: TO / BIS / JUSQU'AU 30/06/2015 | | | |
| 1 | 2104470 | MAIN SWITCH OT40F3 L250 KIT | 1 |
| Note: FROM / AB / À PARTIR DU 01/07/2015 | | | |
| 2 | 4184784 | CONTROL PANEL HMI SC KIT | 1 |
| 2 | 4185259 | ASSEMBLY DISPLAY SC PKG VP. | 1 |
| Note: DISPLAY ALONE / PLATINE SEULE | | | |
| 3 | 4185257 | ASSEMBLY CPU SCe Booster VP. | 1 |
| 4 | 2119861 | AUTOMATIC CIRCUIT BREAKER S203 B13 3POL. | 1 |
| 5 | 2046288 | CIRCUIT BREAKER S201 B16 | 1 |
| 6 | 4197081 | CABLE RJ45 CAT6 0,5M RED SC-PANEL VP. | 1 |

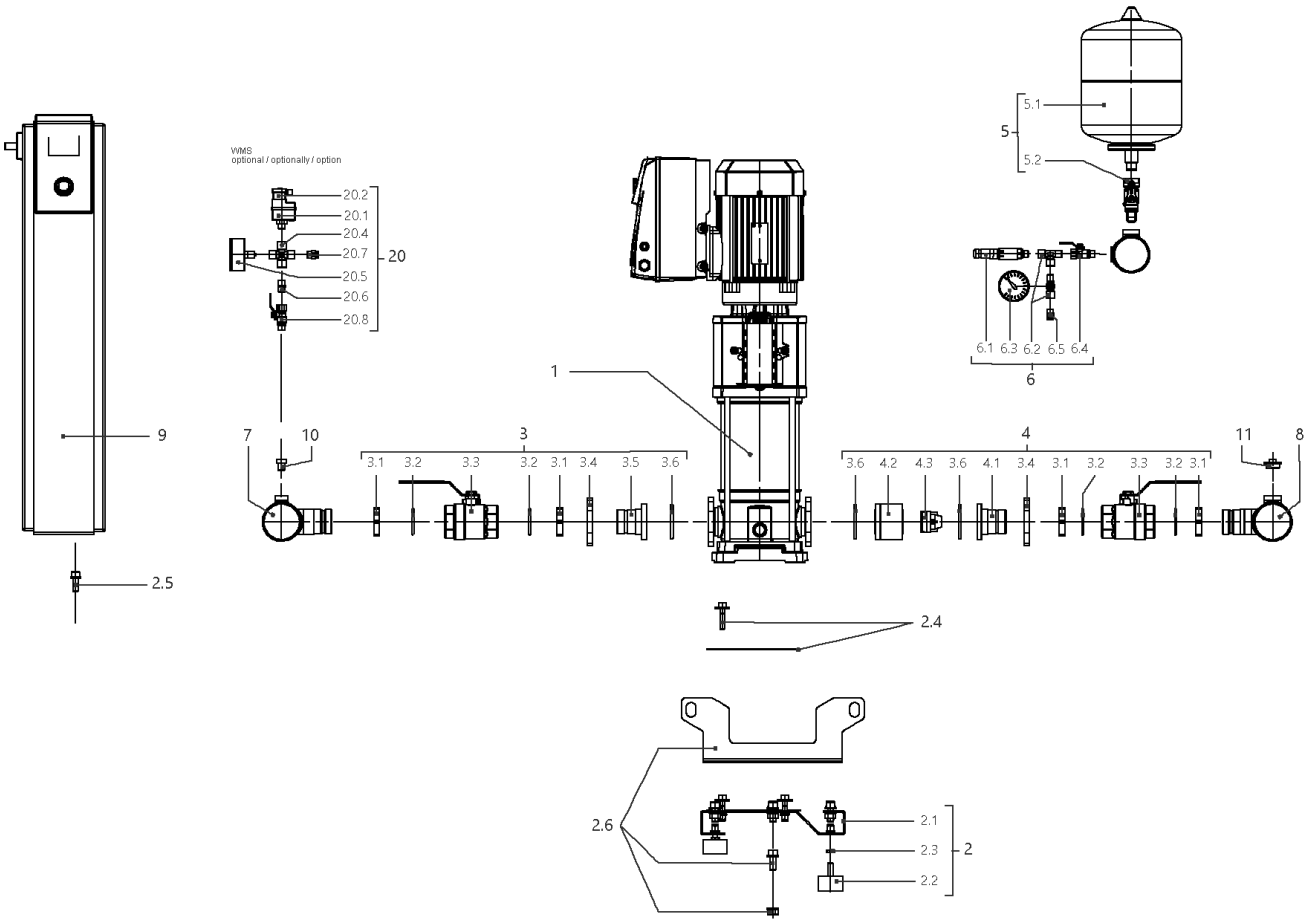
VVMS
optional / optionally / option
20.2
20.1
20.4
20.7
20.5
20.6
20.8
20
5.1
5
5.2
6.1 6.3 6.2 6.5 6.4
6
1
9
7
10
3
3.1 3.2 3.3 3.2 3.1 3.4 3.5 3.6
4
3.6 4.2 4.3 3.6 4.1 3.4 3.1 3.2 3.3 3.2 3.1
11
8
2.5
2.4
2.6
2.1
2.3
2.2
2

## SiBoost Smart 3HELIX VE1004 (2536350)

| Item | Article no. | Description | Quantity |
|---|---|---|---|
| 1 | | HELIX VE1004-1/16/E/S | 1 |
| Note: TO / BIS / JUSQU'AU 31/03/2016 | | | |
| 1 | 4201551 | HELIX VE1004-1/16/E/S | 1 |
| Note: FROM / AB / À PARTIR DU 01/04/2016 | | | |
| 2 | 4197116 | BASE PLATE DE3 1150x420 KIT | 1 |
| Note: TO / BIS / JUSQU'AU 28/02/2013 | | | |
| 2.1 | | > BASEPLATE_3x4/6/10/16V_E300_BOX_150 | 1 |
| 2.2 | 2028654 | > VIBRATION DAMPER D.50X30 M10X28 | 1 |
| 2.3 | 2028281 | > NUT M10 DIN936 (ISO4035) 17H VZ | 1 |
| 2.4 | 4197083 | > HOLDER PUMP Helix 10/16 KIT | 1 |
| 2.5 | 4197084 | > HOLDER SWITCHBOX WILO Smart Control KIT | 1 |
| 2.6 | 4197117 | > LIFTING Siboost HELIX SC KIT | 1 |
| 2 | 4200137 | BASE PLATE DE3 1150x300 M10 KIT | 1 |
| Note: FROM / AB / À PARTIR DU 01/03/2013 - TO / BIS / JUSQU'AU 06/02/2014 | | | |
| 2.1 | | > BASEPLATE_3x4/6/10V_E300_1150x300BOX_150 | 1 |
| 2.2 | 2028654 | > VIBRATION DAMPER D.50X30 M10X28 | 1 |
| 2.3 | 2028281 | > NUT M10 DIN936 (ISO4035) 17H VZ | 1 |
| 2.4 | 4199875 | > HOLDER PUMP Siboost Helix V2/4 KIT | 1 |
| 2.5 | 4197084 | > HOLDER SWITCHBOX WILO Smart Control KIT | 1 |
| 2.6 | 4197085 | > LIFTING Siboost HELIX SC KIT | 1 |
| 2 | 4197070 | BASE PLATE DE3 1150x420 M10 KIT | 1 |
| Note: FROM / AB / À PARTIR DU 07/02/2014 | | | |
| 2.1 | | > BASE DE3 HELIX 10 B150 G300 KPL.SMAR | 1 |
| 2.2 | 2028654 | > VIBRATION DAMPER D.50X30 M10X28 | 1 |
| 2.3 | 2028281 | > NUT M10 DIN936 (ISO4035) 17H VZ | 1 |
| 2.4 | 4197083 | > HOLDER PUMP Helix 10/16 KIT | 1 |
| 2.5 | 4197084 | > HOLDER SWITCHBOX WILO Smart Control KIT | 1 |
| 2.6 | 4197085 | > LIFTING Siboost HELIX SC KIT | 1 |
| 3 | 4197072 | SUCTION SIDE Siboost Helix10/16 KIT | 1 |
| 3.1 | 2032623 | > NUT G1 1/2"SW55 MS | 1 |
| 3.2 | 2032616 | > O-RING ID.44X3,53N DIN3771 E7502 | 1 |
| 3.2 | 2534877 | > BALL TAP KDW40-H G11/2I-I-DN40 DVGW | 1 |
| 3.4 | 2032626 | > OVAL FLANGE D52-LK100 ST-VZ | 1 |
| 3.5 | 2032627 | > UNION INSERT DN40 LAPPED FLANGE | 1 |

| Item | Article no. | Description | Quantity |
|---|---|---|---|
| 3.6 | 2032628 | > O-RING ID.56,52X5,33N DIN3771 E7502 | 1 |
| 4 | 4197074 | DELIVERY SIDE Siboost Helix V10 KIT | 1 |
| 3.1 | 2032623 | > NUT G1 1/2"SW55 MS | 1 |
| 3.2 | 2032616 | > O-RING ID.44X3,53N DIN3771 E7502 | 1 |
| 3.3 | 2534877 | > BALL TAP KDW40-H G11/2I-I-DN40 DVGW | 1 |
| 3.4 | 2032626 | > OVAL FLANGE D52-LK100 ST-VZ | 1 |
| 4.1 | 2054316 | > UNION INSERT DN40 LAPPED FLANGE(W.SLOT) | 1 |
| 4.2 | 2054317 | > HOUSING F.NON RETURN VALVE(RV-IN) DN40 | 1 |
| 4.3 | 2032631 | > NON-RETURN-DEVICE DN40 (MTR)TYP RV-IN | 1 |
| 3.6 | 2032628 | > O-RING ID.56,52X5,33N DIN3771 E7502 | 1 |
| 5 | 2032642 | DIAPHREM TANK 8L/PN16 DIN4807/T5 KIT | 1 |
| 5.1 | 2045914 | > DIAPHREM TANK 8L TYP-DD 16BAR | 1 |
| 5.2 | 2027853 | > FLOW FITTING G3/4 FOR DIAPHRAGM VES. | 1 |
| 6 | 4197076 | PRESSURE SENSOR/ GAUGE 0-16BAR KIT | 1 |
| 6.1 | 2085909 | > PRESS.SENSOR 1/4" 0-16BAR 4-20MA VP. | 1 |
| 6.2 | 4197077 | > T-PIECE 1/4" VP. | 1 |
| 6.3 | 2028692 | > PRESSURE GAUGE NG63-PN16-G1/4 | 1 |
| 6.4 | 2028291 | > BALL TAP R1/4" PN42 GIACOMINI R254DL | 1 |
| 6.5 | 2028691 | > BLOWGUN 1/4" MS 30BAR VP. | 1 |
| 7 | 4197078 | PIPE DE3 R21/2''-3x11/2"+2x1/4x900 VP. | 1 |
| 8 | 4197080 | PIPE DE3 R21/2''-3x11/2"+2x1/4+1x3/4x900 | 1 |
| 9 | | W-CTRL-SCE-B-3x2,2KW-T4-FM-ND2 | 1 |
| Note: TO / BIS / JUSQU'AU 28/02/2013 | | | |
| 9 | | W-CTRL-SCE-B-3x2,2-3,0KW-T4-FM-ND1 | 1 |
| Note: FROM / AB / À PARTIR DU 01/03/2013 - TO / BIS / JUSQU'AU 18/05/2014 | | | |
| 9 | 2541914 | W-CTRL-SCE-B-3x10A-T34-FM-ND1-AVC-PKG | 1 |
| Note: FROM / AB / À PARTIR DU 19/05/2014 | | | |
| 10 | 4197079 | PLUG G1/4"x10 AISI304 KIT | 1 |
| 11 | 2032654 | PLUG R3/4" MS VIEGA 1751 | 1 |
| 20 | 2521150 | ASSEMBLY WMS. DE-EB. +VP | 1 |
| 20.1 | 2028652 | > PRESSURE SWITCH PS3-ASR 1/(1,3) VP. | 1 |
| 20.2 | 2130983 | > PLUG PS3-415 WITH KABEL 1,5M 2NO VP. | 1 |
| 20.4 | 2028290 | > CROSSPIECE R1/4" MS-NICKEL | 1 |
| 20.5 | 2028687 | > PRESSURE GAUGE NG63 R1/4" HI.0-6BAR | 1 |

| Item | Article no. | Description | Quantity |
|---|---|---|---|
| 20.6 | 2054268 | > DUAL NIPPLE G1/4" x G1/4" MS VP. | 1 |
| 20.7 | 2028691 | > BLOWGUN 1/4" MS 30BAR VP. | 1 |
| 20.8 | 2028291 | > BALL TAP R1/4" PN42 GIACOMINI R254DL | 1 |

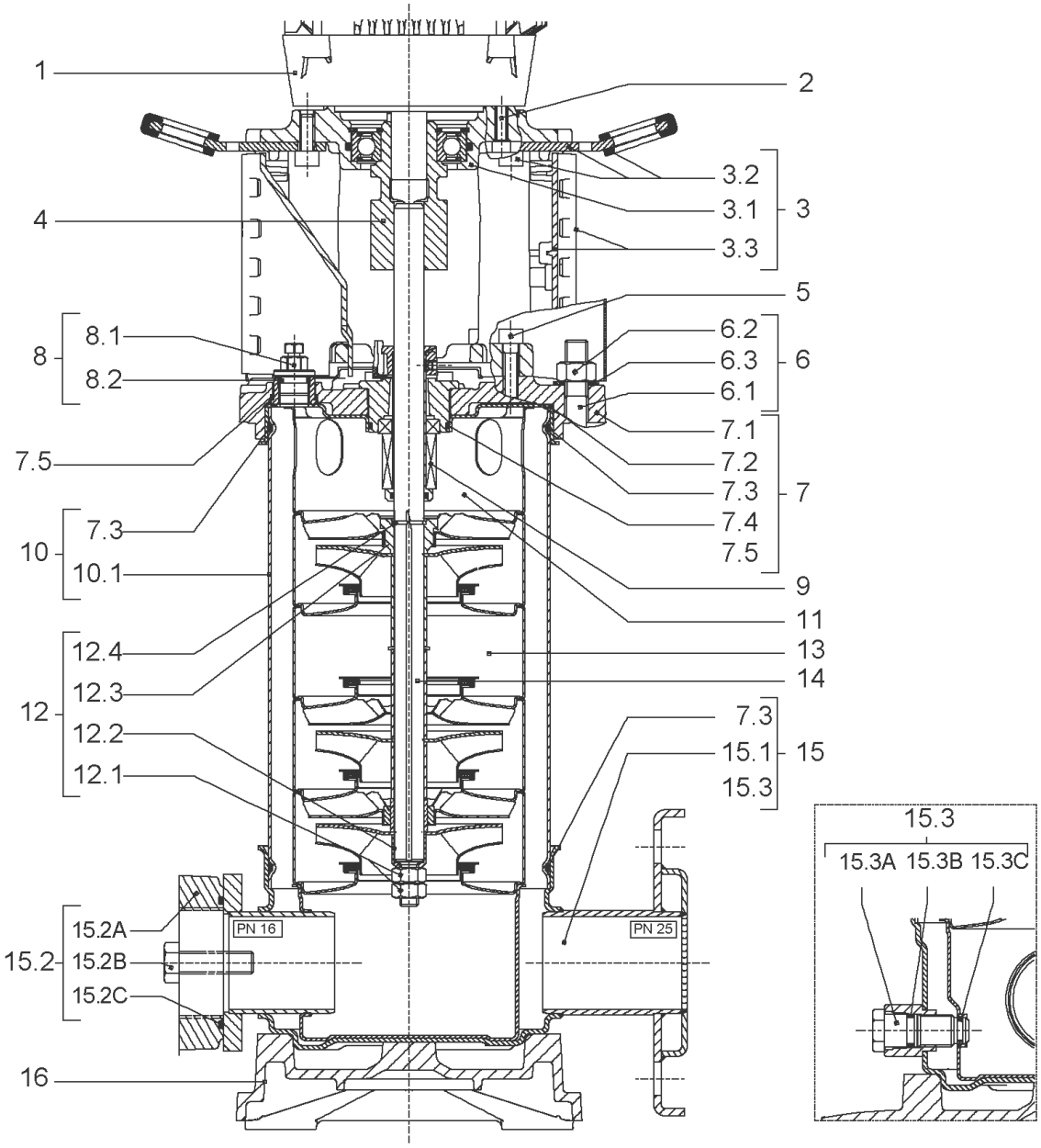
1
2
3.2
3.1
3
3.3
4
5
8.1
8
8.2
6.2
6.3
6
6.1
7.1
7.5
7.2
7.3
7
7.4
7.3
10
7.5
10.1
9
11
12.4
13
12.3
14
12
12.2
7.3
15.1
15
12.1
15.3
15.3
15.3A 15.3B 15.3C
15.2A
PN 16
PN 25
15.2
15.2B
15.2C
16

## HELIX VE1004-1/16/E/S

| Item | Article no. | Description | Quantity |
|---|---|---|---|
| 1 | | DRIVE HELIX-VE1004-IE2-WE KIT | 1 |
| Note: MOTOR BRAND WILO ELEC | | | |
| 1 | | DRIVE HELIX-VE1004-IE4-WE-KIT | 1 |
| Note: MOTOR BRAND WILO ELEC | | | |
| 2 | 4159703 | SCREW M8X40 (4 PIECES) | 1 |
| 3 | 4172795 | LANTERNE FT115 HELIX KIT | 1 |
| 3.1 | | > M+5_6_LANTERN_ONE-PIECE_FT115_CATA | 1 |
| 3.2 | 2127604 | > EYELET CPL.FT HELIX(2 PIECES) | 1 |
| 3.3 | 4159692 | > COUPLING PROTECTOR FT HELIX KIT | 1 |
| 4 | 4159709 | COUPLING D.16xD.24 FT115 HELIX KIT | 1 |
| 5 | 4159707 | SCREW M8X30 (4 PIECES) | 1 |
| 6 | 4177817 | STUD BOLT M12X341 KIT | 1 |
| 6.1 | | > TIE BOLT M12-341x18x30-1.4057 | 1 |
| 6.2 | 2094647 | > NUT M12 M12 ISO4032 VP. | 1 |
| 6.3 | 2123557 | > WASHER CS-12.4-24-1.6-NFE25 (4 PIECES) | 1 |
| 7 | 4210143 | STATIONARY RING HOLDER HELIX 6" EPDM | 1 |
| 7.2 | 2127607 | > STATIONARY RING HOLDER 6" HELIX 1.4301 V | 1 |
| 7.3 | 4176513 | > O-RING FOR PUMP JACKET VP. | 1 |
| 7.4 | 2127603 | > O-RING ID.37,6x2,4 EPDM VP. | 1 |
| 7.5 | 2127602 | > O-RING ID.21,35x2 EPDM VP. | 1 |
| 8 | 4159686 | FILING/PURGING PLUG HELIX EPDM KIT | 1 |
| 9 | 4171327 | SEAL-KIT-HELIX6-10-16 O/E KIT | 1 |
| 10 | 2127575 | HOUSING PIPE D.152x210 1.4301 KIT | 1 |
| 11 | 4172791 | CENTERING STAGE-RETURN HELIX10 1.4301VP. | 1 |
| 12 | 4209273 | SHAFT EQUIPMENT HELIX V10 KIT | 1 |
| 12.1 | | > NUT-H-M10-A4.70 | 1 |
| 12.2 | | > SERRATED LOCK WASHER M+10M3-316L | 1 |
| 12.3 | | > IMPELLER STOP RING L33,6-304 | 1 |
| 12.4 | | > STOP-RUSH-1/2-D16xd2-M+316 | 1 |
| 13 | | HYDRAULIC HELIX V 1004 1.4307 | 1 |
| 14 | 4177820 | SHAFTS Ø16X330 1. 4301 VP. | 1 |
| 15 | 4159682 | PUMP HOUSING HELIX DN50 PN16 1.4301 KIT | 1 |
| 7.3 | 4176513 | > O-RING FOR PUMP JACKET VP. | 1 |
| 15.1 | | > BLASTING PPE HOUSING V-PN16-DN50-304 | 1 |

| Item | Article no. | Description | Quantity |
|---|---|---|---|
| 15.2 | 4217893 | > COUNTER FLANGE-G1"1/2-PN16-GJL KIT | 1 |
| 15.3 | 4171321 | > PRIMING/DRAIN PLUG EPDM HELIX KIT | 1 |
| 16 | 4176517 | BASEPLATE V8/10 VP. | 1 |

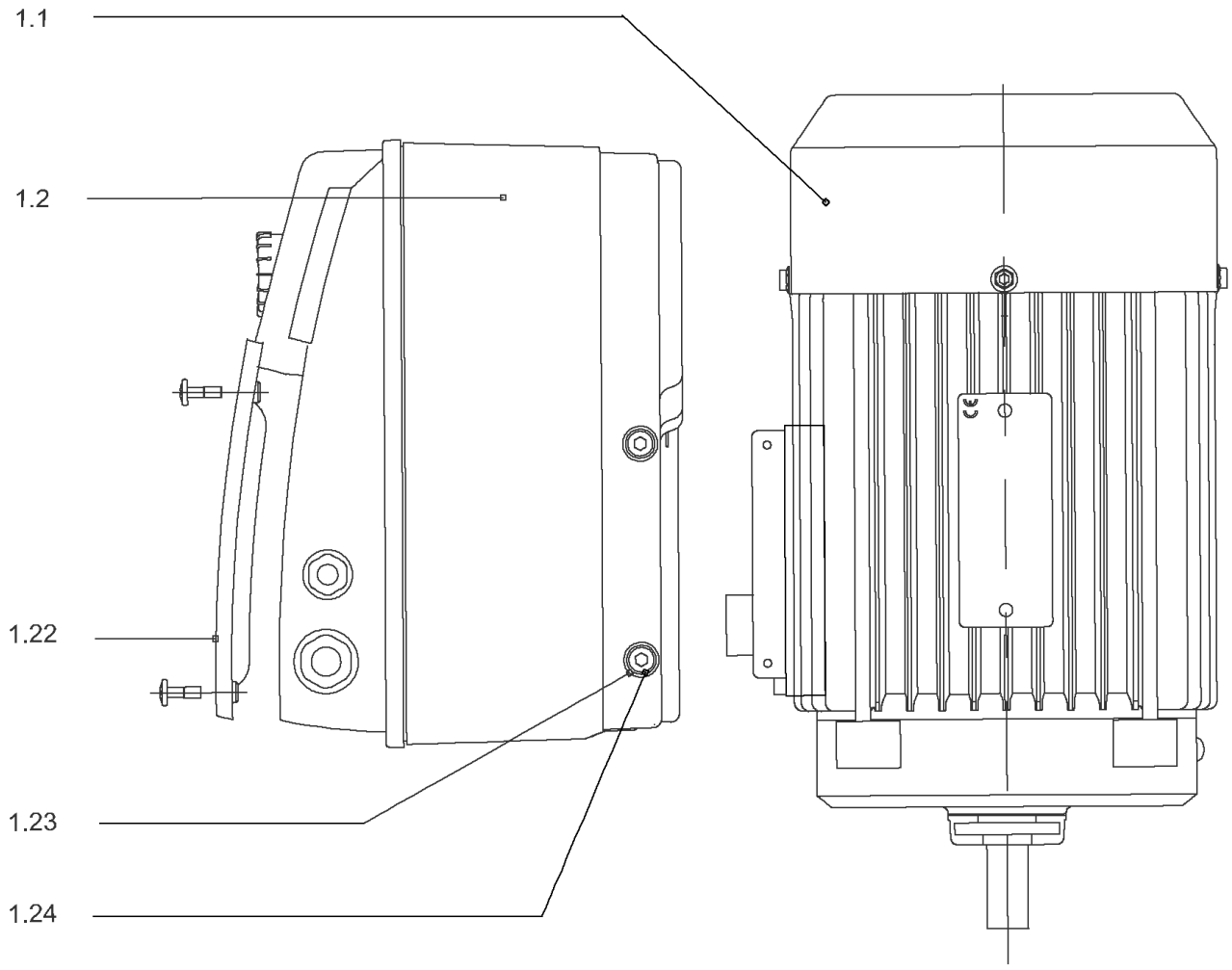
1.1
1.2
1.22
1.23
1.24

## DRIVE HELIX-VE1004-IE2-WE KIT

| Item | Article no. | Description | Quantity |
|---|---|---|---|
| 1.1 | 4185016 | MOTOR 2,2/2/90 3~ 380V 60HZ IE2 WE VP. | 1 |
| | | SPARE PARTS MOTOR:ON REQUEST | 1 |
| 1.2 | 4209650 | MODULE HELIX-VE1004-IE2-WE KIT | 1 |
| 1.22 | 2054227 | > MODULE COVER/GASKET TL3/4 KIT | 1 |
| 1.23 | 4215716 | > SCREW M5X16 DIN912 8.8 A2A (4pieces) VP. | 1 |
| 1.24 | 2057978 | > RONDELLE A5,3 DIN6797 FST ZN (4 PIECES) | 1 |

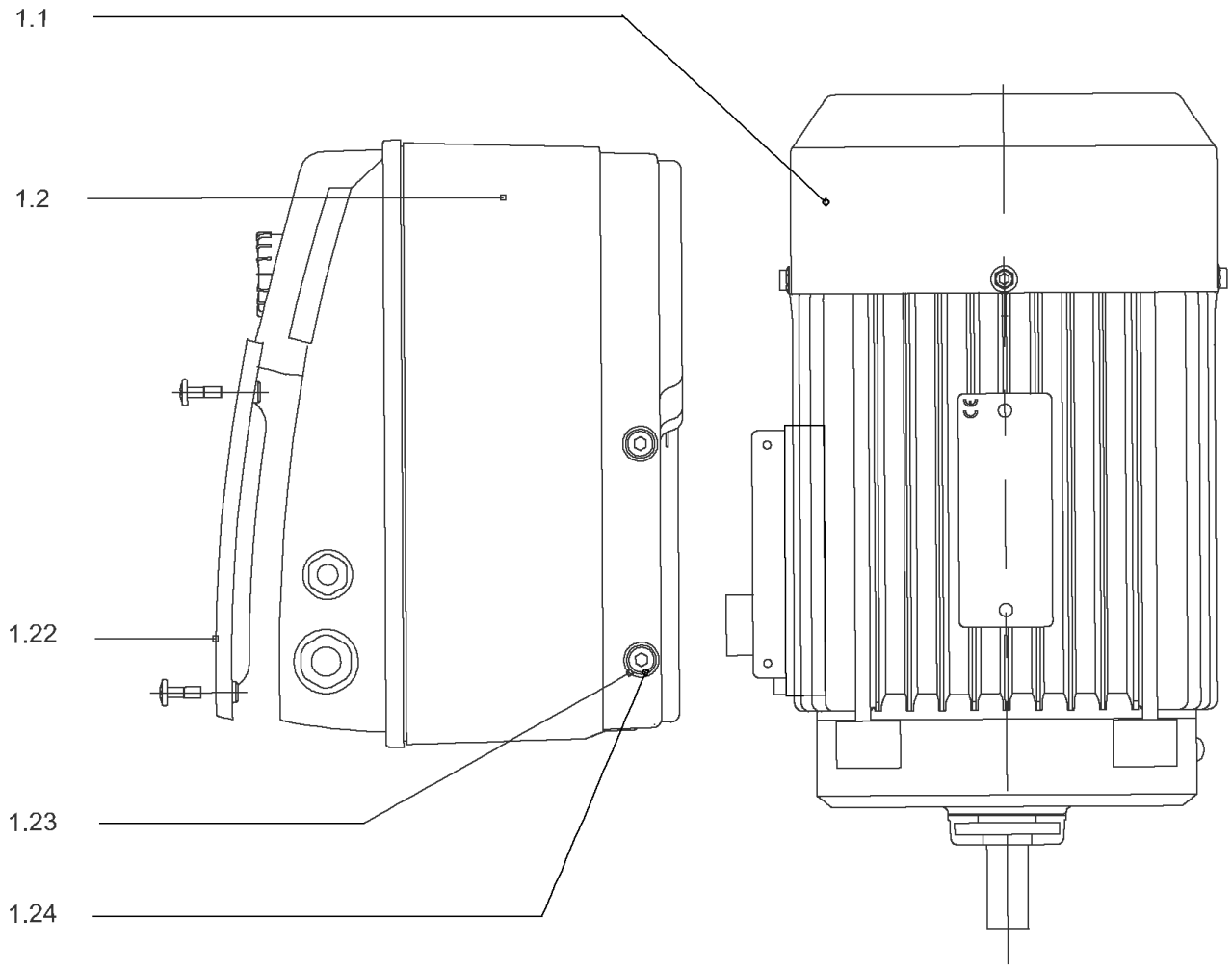
1.1
1.2
1.22
1.23
1.24

## DRIVE HELIX-VE1004-IE4-WE-KIT

| Item | Article no. | Description | Quantity |
|---|---|---|---|
| 1.1 | 4207920 | MOTOR 2.2/2/90 3~ 380V 60HZ IE4 WE VP. | 1 |
| | | SPARE PARTS MOTOR:ON REQUEST | 1 |
| 1.2 | 4209592 | MODULE HELIX-VE1004-IE4-WE KIT | 1 |
| 1.22 | 2054227 | > MODULE COVER/GASKET TL3/4 KIT | 1 |
| 1.23 | 4215716 | > SCREW M5X16 DIN912 8.8 A2A (4pieces) VP. | 1 |
| 1.24 | 2057978 | > RONDELLE A5,3 DIN6797 FST ZN (4 PIECES) | 1 |

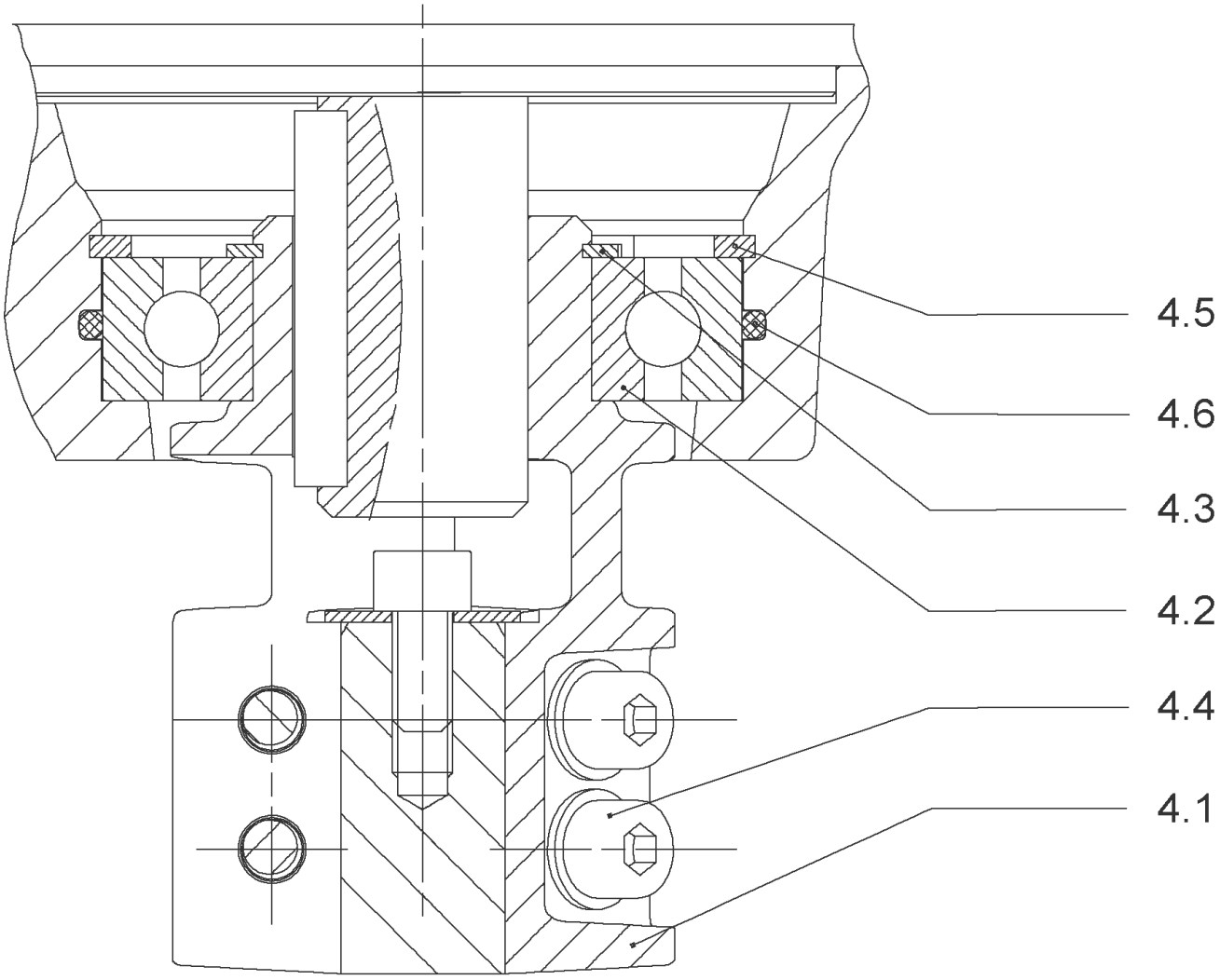
4.5
4.6
4.3
4.2
4.4
4.1

## COUPLING D.16xD.24 FT115 HELIX KIT (4159709)

| Item | Article no. | Description | Quantity |
|---|---|---|---|
| 4.1 | | COUPLING M+ Ø16XØ24 FT115 MACHINED | 1 |
| 4.2 | 2131023 | BALL BEARING 6207/ZZ-C3(HT)VP. | 1 |
| 4.3 | 4234254 | CIRCLIP-FOR-SHAFT-D35x1.5 VP. | 1 |
| 4.4 | 4157726 | SCREW KIT M8X30 (4 PIECES) | 1 |
| 4.5 | 4234251 | CIRCLIP-D72x2.5 VP. | 1 |
| 4.6 | 4234246 | O-RING 72X3 VP. | 1 |
| | | NOMEL CONTACT WASHER 8x16x1,4 STEEL ZC | 1 |

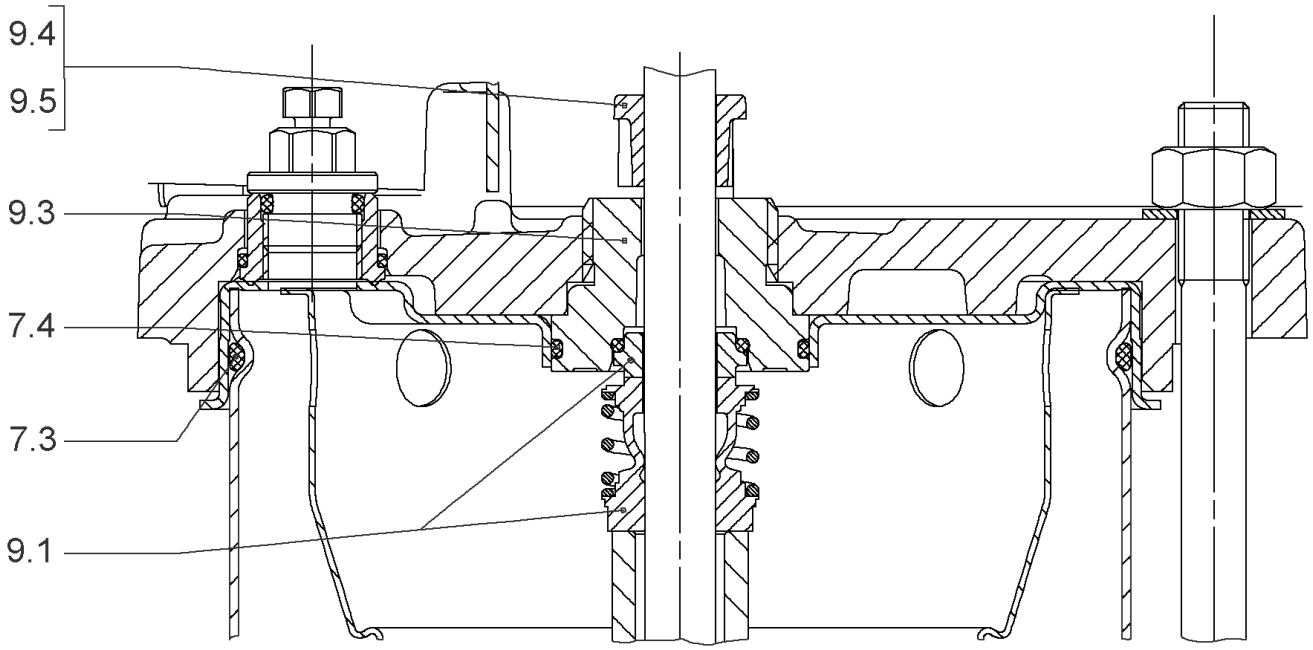
9.4
9.5
9.3
7.4
7.3
9.1

## SEAL-KIT-HELIX6-10-16 O/E KIT (4171327)

| Item | Article no. | Description | Quantity |
|---|---|---|---|
| 7.3 | 4176513 | O-RING FOR PUMP JACKET VP. | 1 |
| 7.4 | 2127603 | O-RING ID.37,6x2,4 EPDM VP. | 1 |
| 9.1 | 4177801 | MECH.SEAL HELIX6-10-16 O/E VP. | 1 |
| 9.3 | 4177798 | MACHINED RING HOLDER M+6" Ø16 304 VP. | 1 |
| 9.5 | 4177799 | MACHINED DRIVE RING Ø16 VP. | 1 |
| 9.4 | 4176520 | SCREW CH M5x5 A4-70 ( 3PIECES ) | 1 |

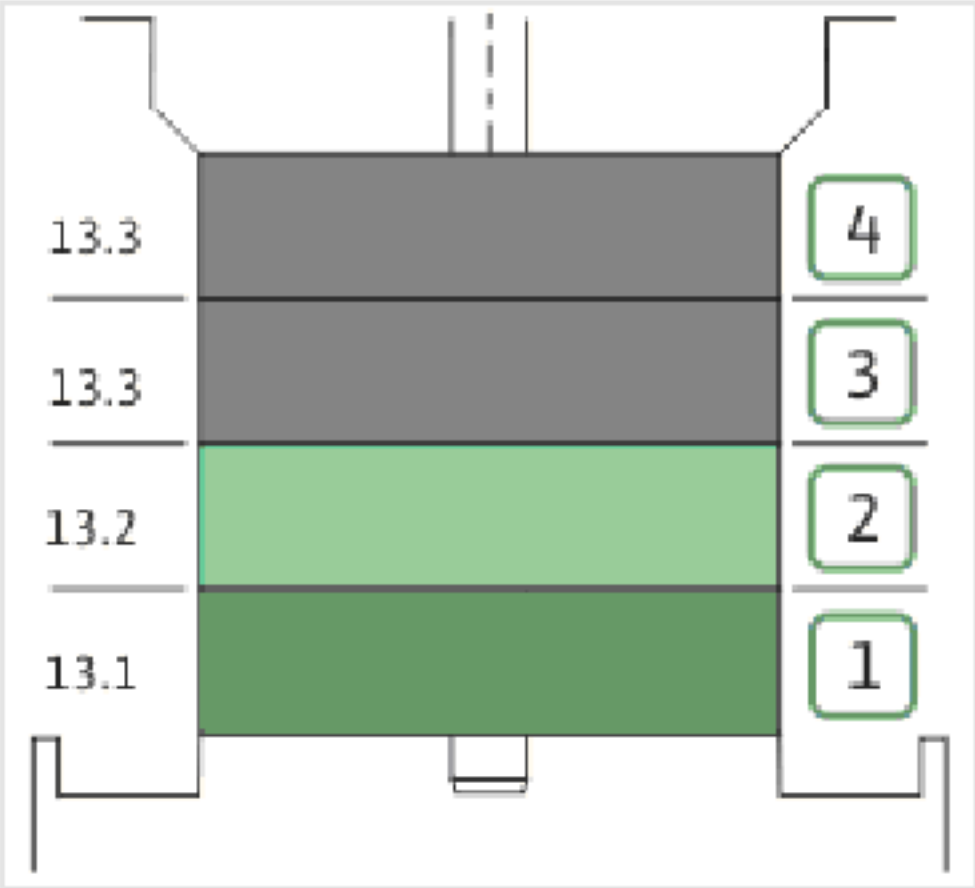
13.3
13.3
13.2
13.1
4
3
2
1

| Item | Article no. | Description | Quantity |
|---|---|---|---|
| 13.3 | 4172793 | INTERMEDIATE STAGE HELIX 10 1.4301 KIT | 1 |
| | | > MACH.STD-STG-CASING-WGV+NR-M+10-304 | 1 |
| | | > IMPELLER-M+10-304 | 1 |
| | | > IMPELLER SPACER Ø16,05X19,45-L36,465-304 | 1 |
| 13.2 | 4172792 | INTERMEDIATE STAGE HELIX 10 1.4301 KIT | 1 |
| | | > MACH.BEARING-STG-CASING-WNR-M+10-304 | 1 |
| | | > IMPELLER-M+10-304 | 1 |
| | | > SHAFT SLEEVE-SPACER-Ø19,35x18,465-304 | 1 |
| | | > SHAFT-SLEEVE-D16xD20x18-CW | 1 |
| 13.1 | 4171331 | STAGE HELIX10 1.4301KIT | 1 |
| | | > MACH.STG-CASING-WOGV-WNR-M+10-304 | 1 |
| | | > IMPELLER-M+10-304 | 1 |

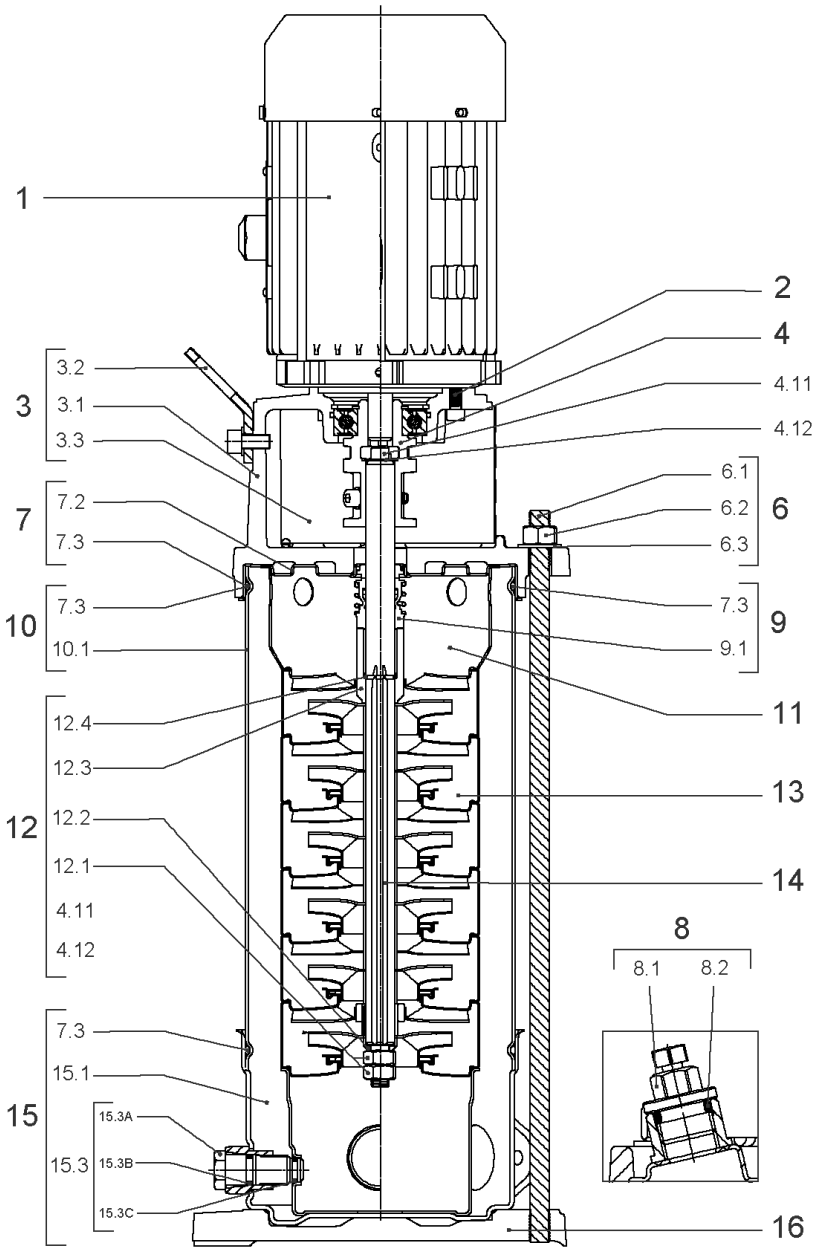
1
2
4
4.11
4.12
3
3.2
3.1
3.3
7
7.2
7.3
6
6.1
6.2
6.3
10
7.3
10.1
9
7.3
9.1
11
12
12.4
12.3
12.2
12.1
4.11
4.12
13
14
8
8.1
8.2
15
7.3
15.1
15.3
15.3A
15.3B
15.3C
16

## HELIX VE1004-1/16/E/S (4201551)

| Item | Article no. | Description | Quantity |
|---|---|---|---|
| 1 | | DRIVE HELIX-VE1004-IE4-WE-KIT | 1 |
| Note: MOTOR BRAND WILO ELEC | | | |
| | | SPARE PARTS MOTOR:ON REQUEST | 1 |
| 2 | 4159707 | SCREW M8X30 (4 PIECES) | 1 |
| 3 | 4213784 | LANTERN FT115 HELIX KIT | 1 |
| 3.1 | | > LANT-MOT-VMI-ReDTC6"-FT115-MACHINED+CATA | 1 |
| 3.2 | 4184852 | > EYELET CPL.FT HELIX (2 PIECES) | 1 |
| 3.3 | 4213782 | > COUPLING PROTECTOR FT115/130 HELIX KIT | 1 |
| 4 | 4159709 | COUPLING D.16xD.24 FT115 HELIX KIT | 1 |
| 6 | 4177817 | STUD BOLT M12X341 KIT | 1 |
| 6.1 | | > TIE BOLT M12-341x18x30-1.4057 | 1 |
| 6.2 | 2094647 | > NUT M12 M12 ISO4032 VP. | 1 |
| 6.3 | 2123557 | > WASHER CS-12.4-24-1.6-NFE25 (4 PIECES) | 1 |
| 7 | 4214481 | STATIONARY RING HOLDER HELIX D27 ReDTC | 1 |
| 7.2 | 4214479 | > STATIONARY RING HOLDER HELIX D27 VP. | 1 |
| 7.3 | 4176513 | > O-RING FOR PUMP JACKET VP. | 1 |
| 8 | 4212724 | FILING/PURGING PLUG HELIX ReDTC KIT | 1 |
| 8.1 | | > FILLING PLUG MVI6"-304 | 1 |
| 8.2 | 4177800 | > O-RING EPDM PLUG HELIX VP. | 1 |
| 9 | 4214483 | MECH.SEAL HELIX6-10-16 O/E ReDTC KIT | 1 |
| 9.1 | 4177801 | > MECH.SEAL HELIX6-10-16 O/E VP. | 1 |
| 7.3 | 4176513 | > O-RING FOR PUMP JACKET VP. | 1 |
| 10 | 4177818 | HOUSING PIPES Ø152-M+1004-304 KIT | 1 |
| 7.3 | 4176513 | > O-RING FOR PUMP JACKET VP. | 1 |
| 10.1 | | > HOUSING-PIPE Ø152-M+1004/1603-304 | 1 |
| 11 | 4172791 | CENTERING STAGE-RETURN HELIX10 1.4301VP. | 1 |
| 12 | 4214517 | SHAFT EQUIPMENT HELIX V10 ReDTC KIT | 1 |
| 12.1 | | > NUT-H-M10-A4.70 | 1 |
| 12.2 | | > SERRATED LOCK WASHER M+10M3-316L | 1 |
| 12.3 | | > 1/2-SNAP-RING-6/10M3-316L | 1 |
| 12.4 | | > STOP-RUSH-1/2-D16xd2-M+316 | 1 |
| 4.11 | | > SCREW CHC-M6X14-8.8-ISO4762-GEOMET500A | 1 |
| 4.12 | | > WASHER D.24 L6U ZINK | 1 |
| 13 | | HYDRAULIC HELIX V 1004 1.4307 | 1 |

| Item | Article no. | Description | Quantity |
|---|---|---|---|
| 14 | 4214495 | SHAFT D.16X278 HELIX 1.4057 VP. | 1 |
| 15 | 4159682 | PUMP HOUSING HELIX DN50 PN16 1.4301 KIT | 1 |
| 7.3 | 4176513 | > O-RING FOR PUMP JACKET VP. | 1 |
| 15.1 | | > BLASTING PPE HOUSING V-PN16-DN50-304 | 1 |
| 15.2 | 4217893 | > COUNTER FLANGE-G1"1/2-PN16-GJL KIT | 1 |
| 15.3 | 4171321 | > PRIMING/DRAIN PLUG EPDM HELIX KIT | 1 |
| 16 | 4176517 | BASEPLATE V8/10 VP. | 1 |

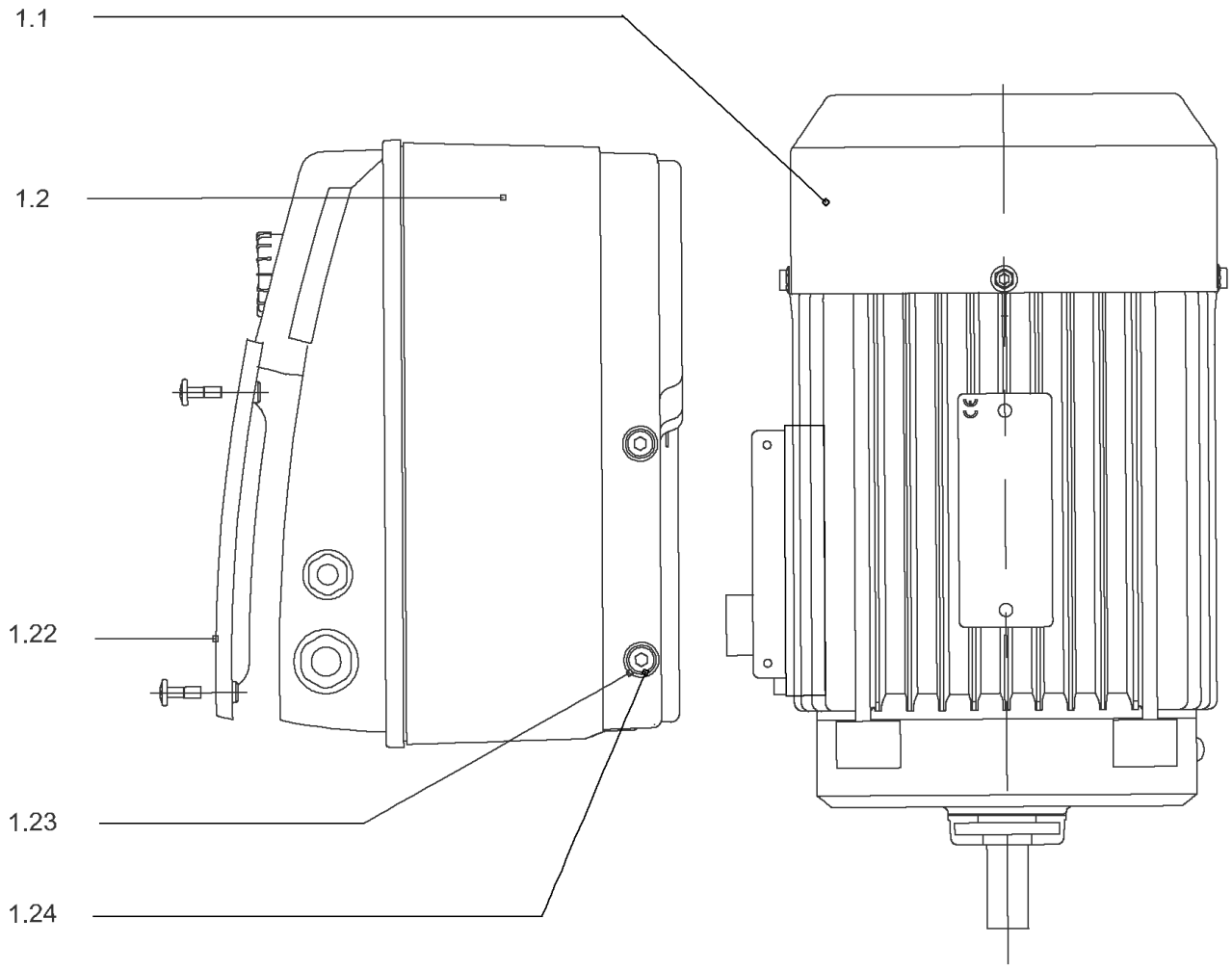
1.1
1.2
1.22
1.23
1.24

## DRIVE HELIX-VE1004-IE4-WE-KIT

| Item | Article no. | Description | Quantity |
|---|---|---|---|
| 1.1 | 4207920 | MOTOR 2.2/2/90 3~ 380V 60HZ IE4 WE VP. | 1 |
| | | SPARE PARTS MOTOR:ON REQUEST | 1 |
| 1.2 | 4209592 | MODULE HELIX-VE1004-IE4-WE KIT | 1 |
| 1.22 | 2054227 | > MODULE COVER/GASKET TL3/4 KIT | 1 |
| 1.23 | 4215716 | > SCREW M5X16 DIN912 8.8 A2A (4pieces) VP. | 1 |
| 1.24 | 2057978 | > RONDELLE A5,3 DIN6797 FST ZN (4 PIECES) | 1 |

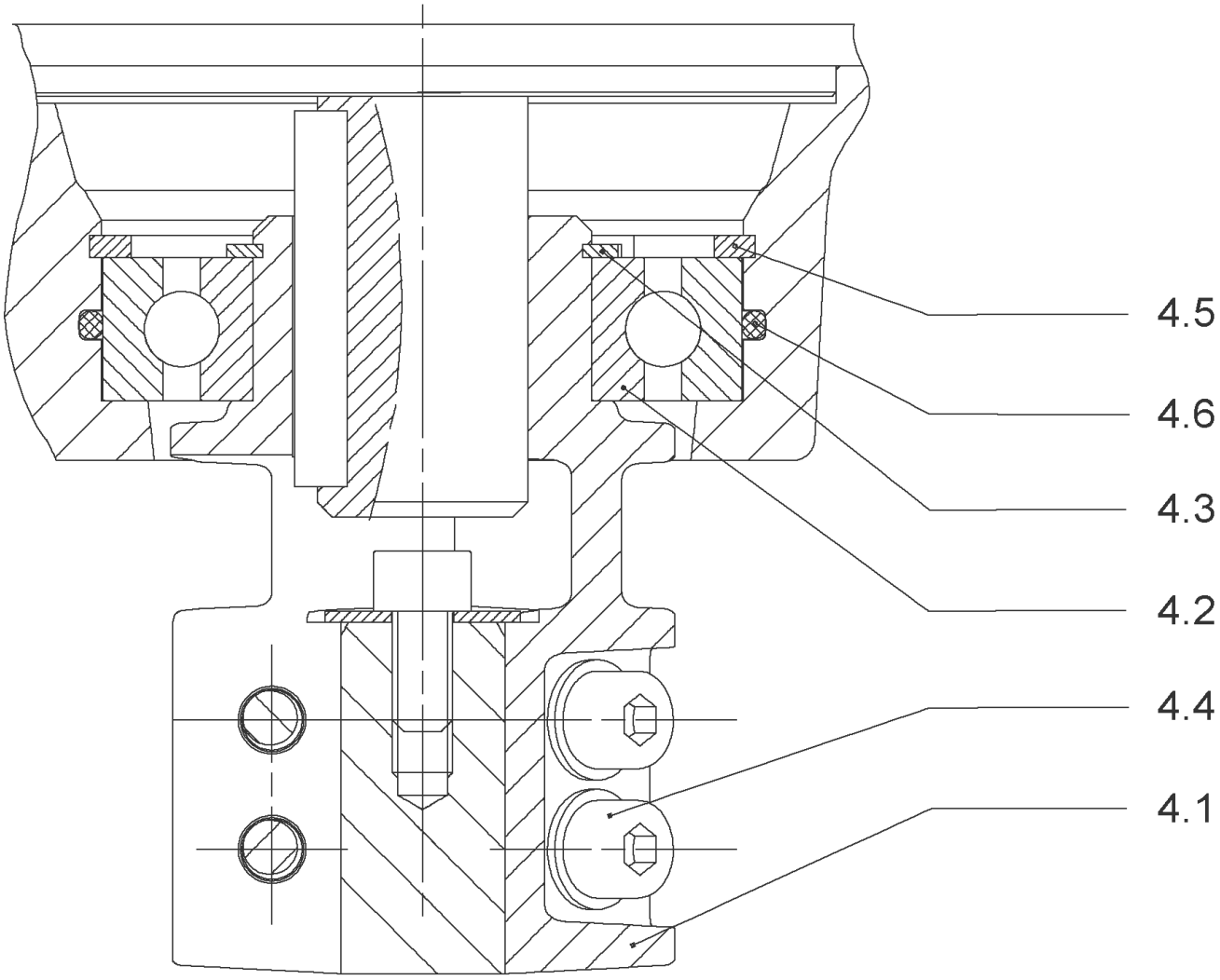
4.5
4.6
4.3
4.2
4.4
4.1

## COUPLING D.16xD.24 FT115 HELIX KIT (4159709)

| Item | Article no. | Description | Quantity |
|---|---|---|---|
| 4.1 | | COUPLING M+ Ø16XØ24 FT115 MACHINED | 1 |
| 4.2 | 2131023 | BALL BEARING 6207/ZZ-C3(HT)VP. | 1 |
| 4.3 | 4234254 | CIRCLIP-FOR-SHAFT-D35x1.5 VP. | 1 |
| 4.4 | 4157726 | SCREW KIT M8X30 (4 PIECES) | 1 |
| 4.5 | 4234251 | CIRCLIP-D72x2.5 VP. | 1 |
| 4.6 | 4234246 | O-RING 72X3 VP. | 1 |
| | | NOMEL CONTACT WASHER 8x16x1,4 STEEL ZC | 1 |

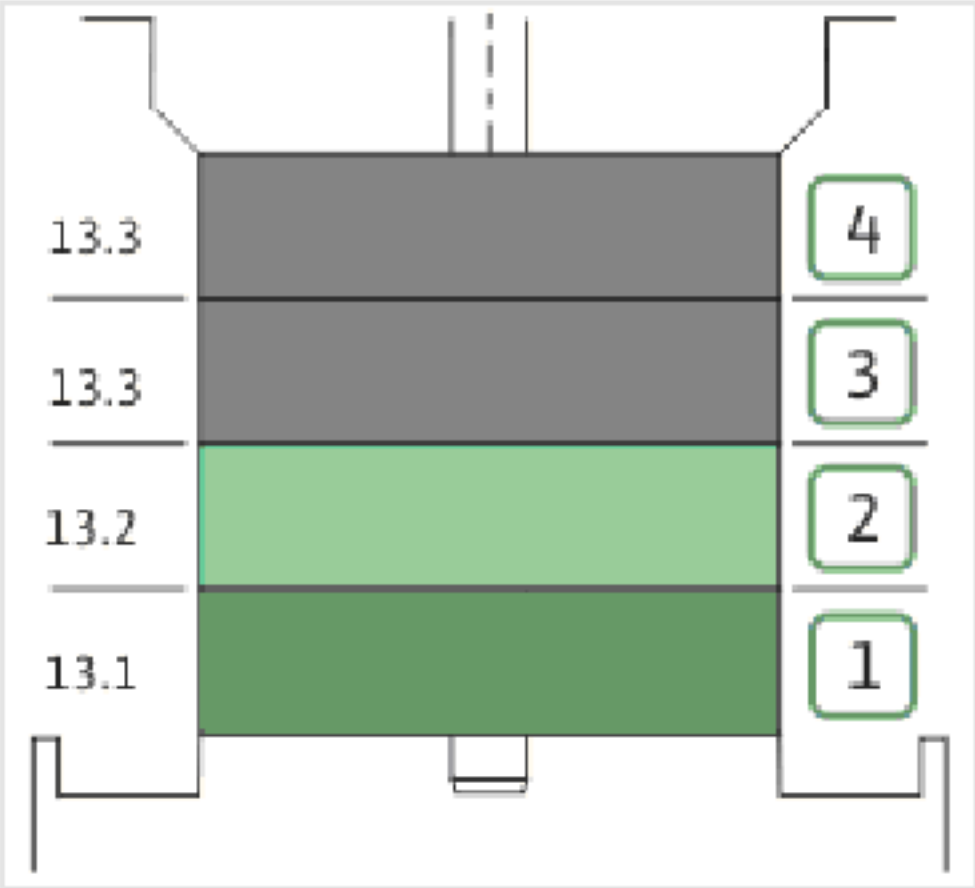
13.3
13.3
13.2
13.1
4
3
2
1

| Item | Article no. | Description | Quantity |
|---|---|---|---|
| 13.3 | 4172793 | INTERMEDIATE STAGE HELIX 10 1.4301 KIT | 1 |
| | | > MACH.STD-STG-CASING-WGV+NR-M+10-304 | 1 |
| | | > IMPELLER-M+10-304 | 1 |
| | | > IMPELLER SPACER Ø16,05X19,45-L36,465-304 | 1 |
| 13.2 | 4172792 | INTERMEDIATE STAGE HELIX 10 1.4301 KIT | 1 |
| | | > MACH.BEARING-STG-CASING-WNR-M+10-304 | 1 |
| | | > IMPELLER-M+10-304 | 1 |
| | | > SHAFT SLEEVE-SPACER-Ø19,35x18,465-304 | 1 |
| | | > SHAFT-SLEEVE-D16xD20x18-CW | 1 |
| 13.1 | 4171331 | STAGE HELIX10 1.4301KIT | 1 |
| | | > MACH.STG-CASING-WOGV-WNR-M+10-304 | 1 |
| | | > IMPELLER-M+10-304 | 1 |

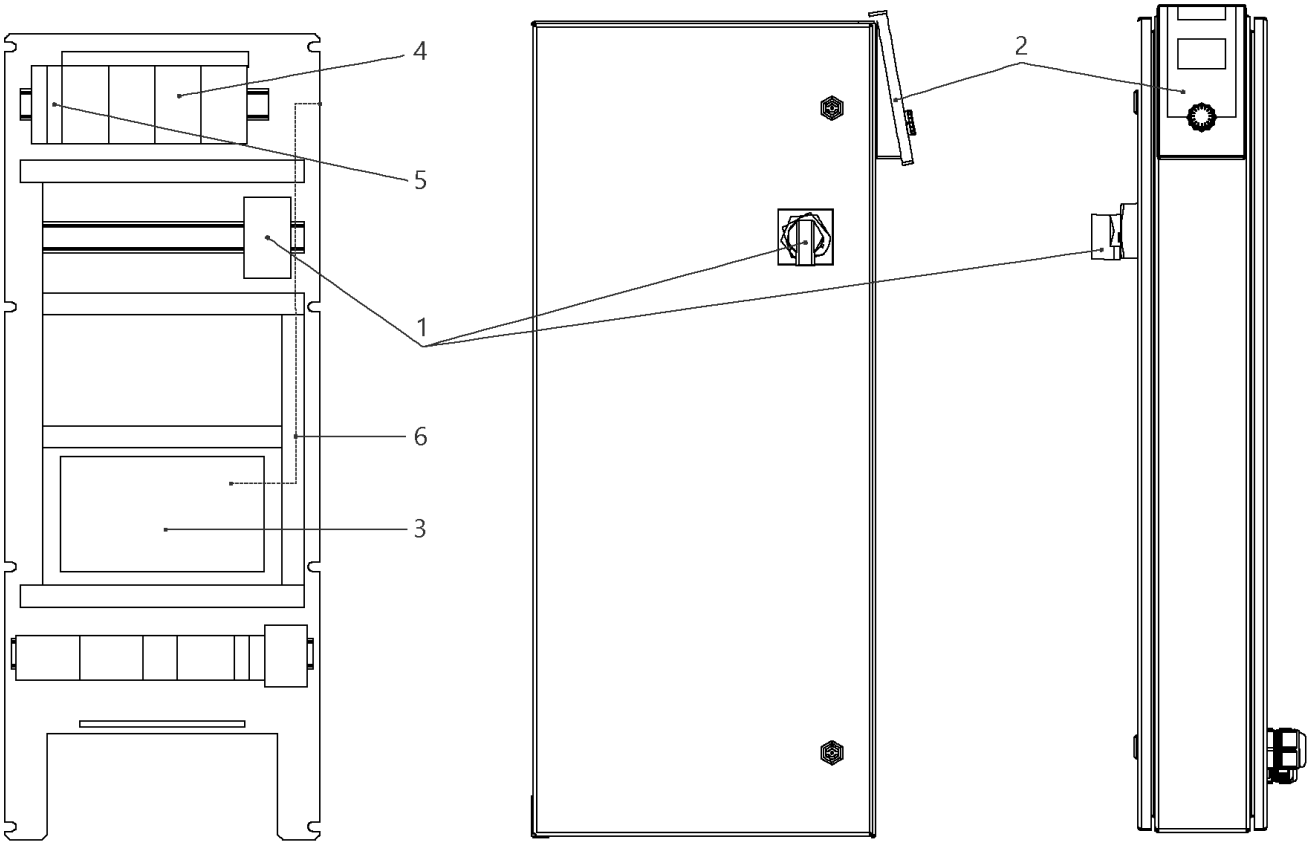
4
5
1
6
3
2

## W-CTRL-SCE-B-3x2,2KW-T4-FM-ND2

| Item | Article no. | Description | Quantity |
|---|---|---|---|
| 1 | 2104470 | MAIN SWITCH OT40F3 L250 KIT | 1 |
| 2 | 4184784 | CONTROL PANEL HMI SC KIT | 1 |
| 2 | 4185259 | ASSEMBLY DISPLAY SC PKG VP. | 1 |
| 3 | 4185257 | ASSEMBLY CPU SCe Booster VP. | 1 |
| 4 | 2051217 | AUTOM.CIRCUIT BREAKER S203 B16 TO7,5kW | 1 |
| 5 | 2046288 | CIRCUIT BREAKER S201 B16 | 1 |
| 6 | 4194956 | PATCH CABLE RJ45 CAT6 1,0M BLUE SC-PANEL | 1 |

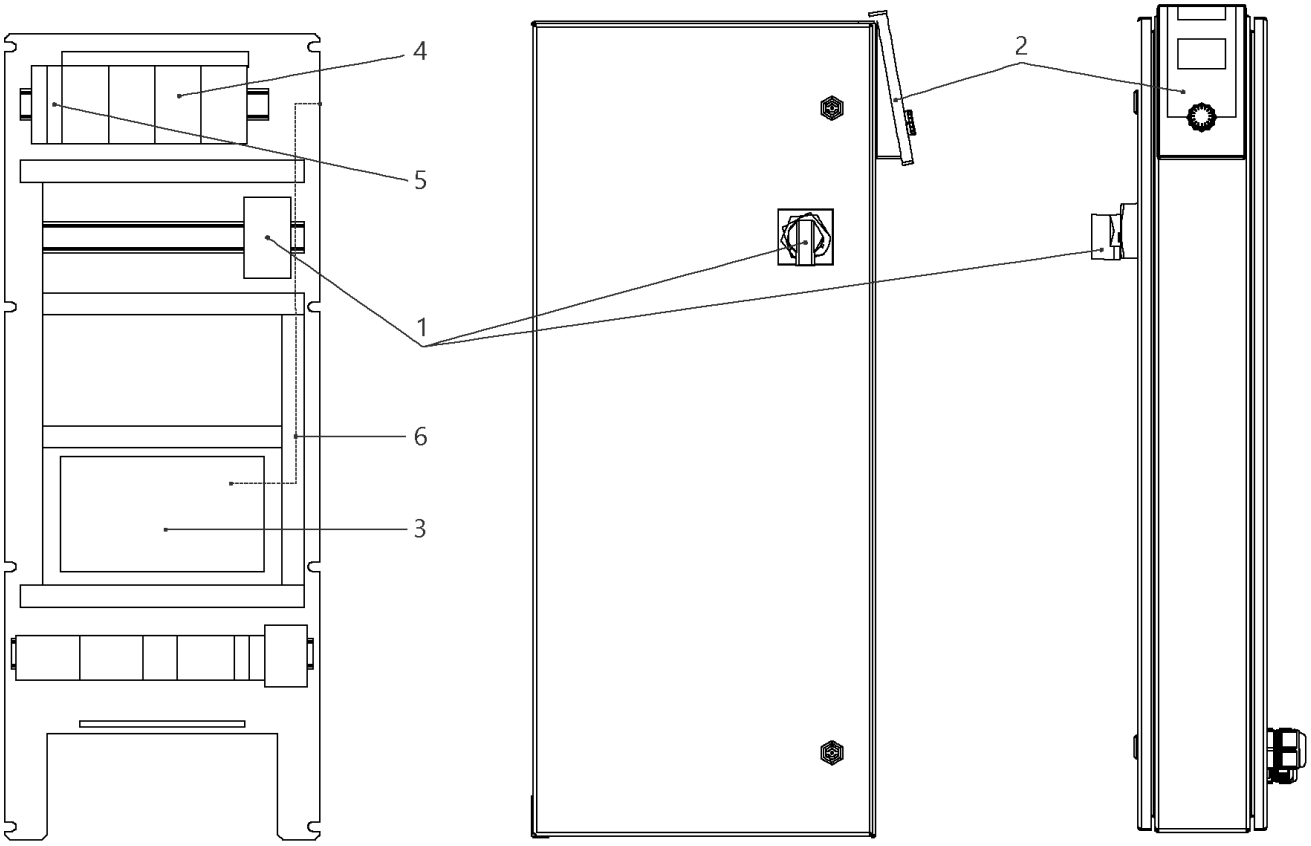
4
5
1
6
3
2

## W-CTRL-SCE-B-3x2,2-3,0KW-T4-FM-ND1

| Item | Article no. | Description | Quantity |
|---|---|---|---|
| 1 | 2104470 | MAIN SWITCH OT40F3 L250 KIT | 1 |
| 2 | 4184784 | CONTROL PANEL HMI SC KIT | 1 |
| 2 | 4185259 | ASSEMBLY DISPLAY SC PKG VP. | 1 |
| 3 | 4185257 | ASSEMBLY CPU SCe Booster VP. | 1 |
| 4 | 2051217 | AUTOM.CIRCUIT BREAKER S203 B16 TO7,5kW | 1 |
| 5 | 2046288 | CIRCUIT BREAKER S201 B16 | 1 |
| 6 | 4197081 | CABLE RJ45 CAT6 0,5M RED SC-PANEL VP. | 1 |

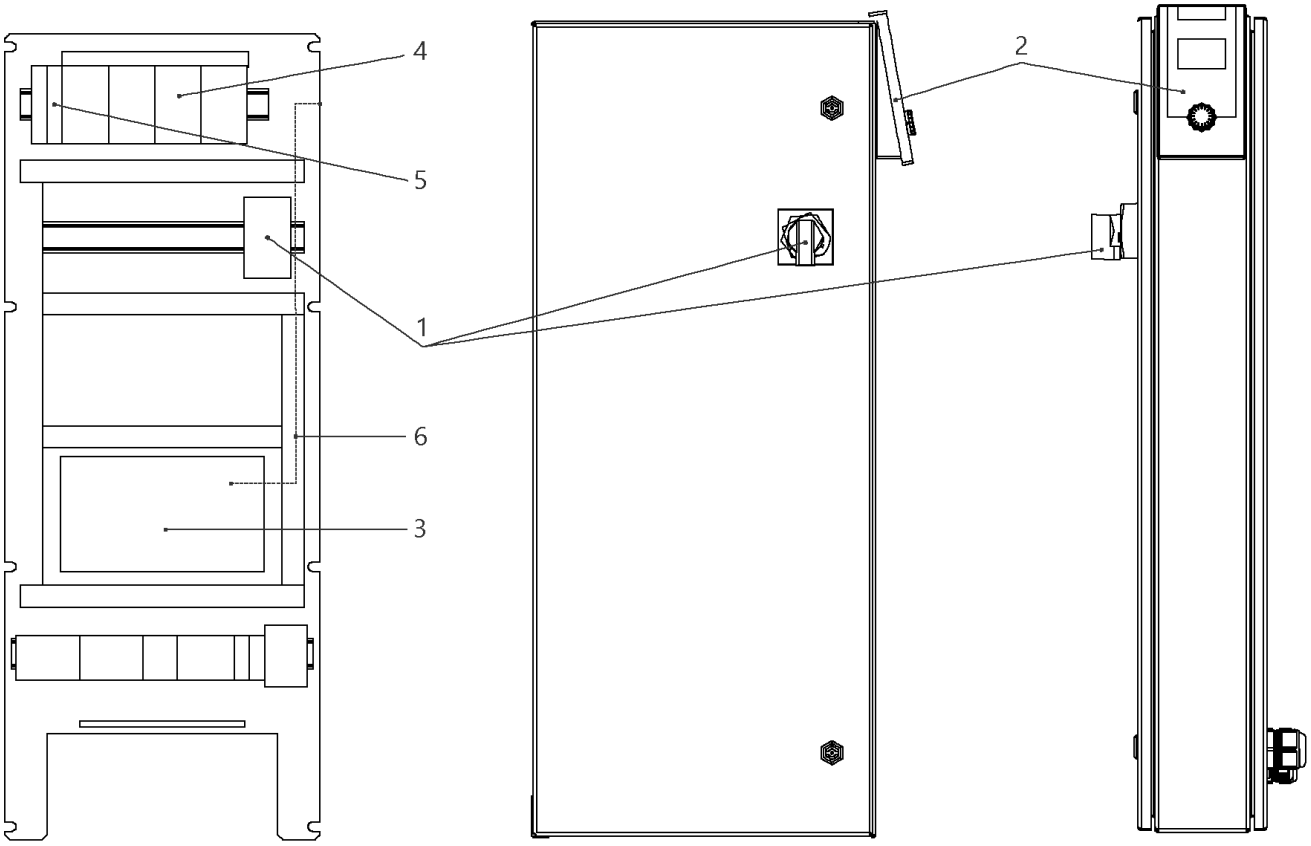
4
5
1
6
3
2

## W-CTRL-SCE-B-3x10A-T34-FM-ND1-AVC-PKG (2541914)

| Item | Article no. | Description | Quantity |
|---|---|---|---|
| 1 | 2104473 | MAIN SWITCH OT63F3 L105 KIT | 1 |
| Note: TO / BIS / JUSQU'AU 30/06/2015 | | | |
| 1 | 2104470 | MAIN SWITCH OT40F3 L250 KIT | 1 |
| Note: FROM / AB / À PARTIR DU 01/07/2015 | | | |
| 2 | 4184784 | CONTROL PANEL HMI SC KIT | 1 |
| 2 | 4185259 | ASSEMBLY DISPLAY SC PKG VP. | 1 |
| Note: DISPLAY ALONE / PLATINE SEULE | | | |
| 3 | 4185257 | ASSEMBLY CPU SCe Booster VP. | 1 |
| 4 | 2119861 | AUTOMATIC CIRCUIT BREAKER S203 B13 3POL. | 1 |
| 5 | 2046288 | CIRCUIT BREAKER S201 B16 | 1 |
| 6 | 4197081 | CABLE RJ45 CAT6 0,5M RED SC-PANEL VP. | 1 |

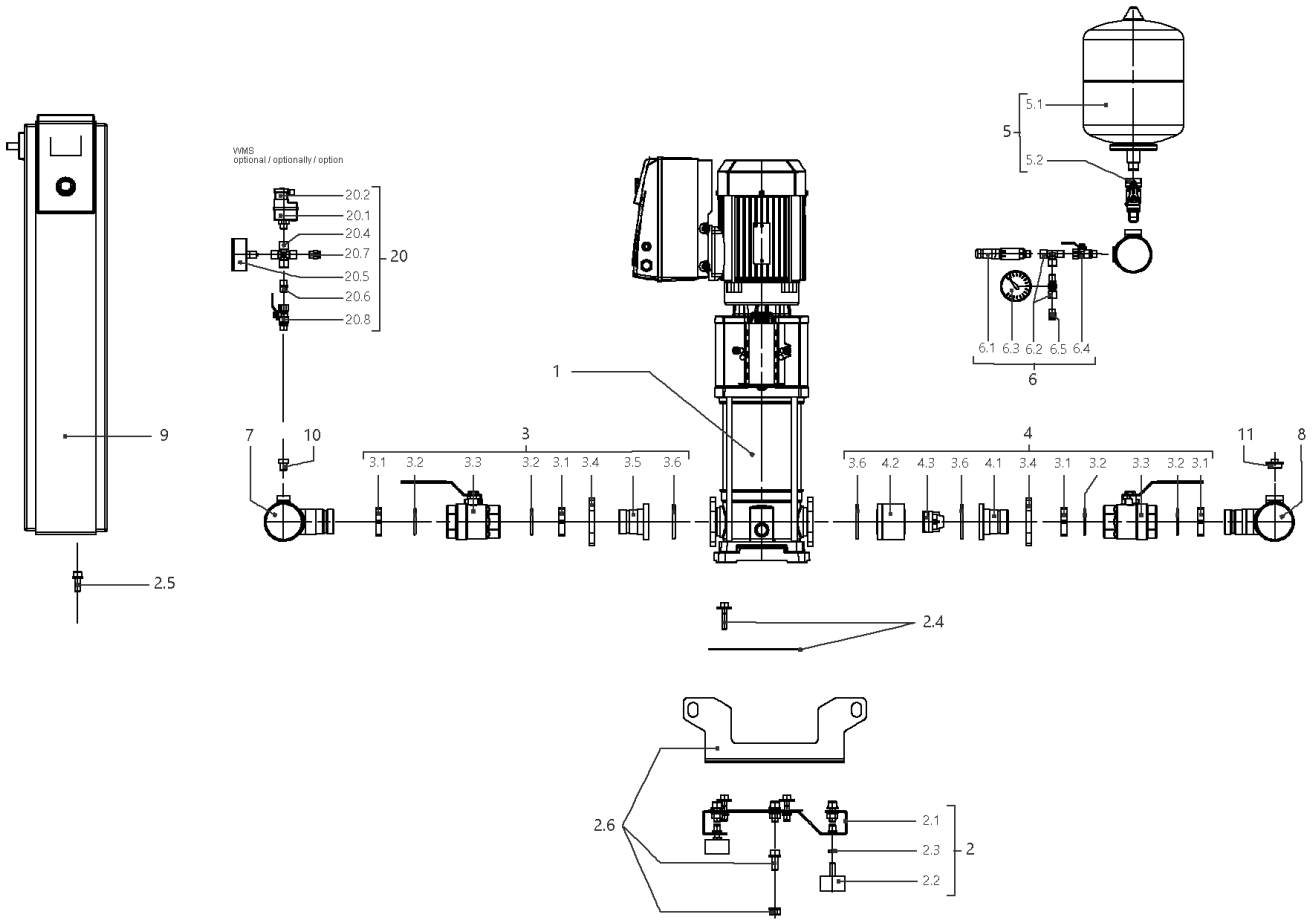
VVMS
optional / optionally / option
20.2
20.1
20.4
20.7
20.5
20.6
20.8
20
5.1
5
5.2
6.1 6.3 6.2 6.5 6.4
6
1
9
7
10
3
3.1 3.2 3.3 3.2 3.1 3.4 3.5 3.6
4
3.6 4.2 4.3 3.6 4.1 3.4 3.1 3.2 3.3 3.2 3.1
11
8
2.5
2.4
2.6
2.1
2.3
2.2
2

## SiBoost Smart 3HELIX VE1006 (2536351)

| Item | Article no. | Description | Quantity |
|---|---|---|---|
| 1 | | HELIX VE1006-1/16/E/S | 1 |
| Note: TO / BIS / JUSQU'AU 30/04/2016 | | | |
| 1 | 4201555 | HELIX VE1006-1/16/E/S | 1 |
| Note: FROM / AB / À PARTIR DU 01/05/2016 | | | |
| 2 | 4197116 | BASE PLATE DE3 1150x420 KIT | 1 |
| 2.1 | | > BASEPLATE_3x4/6/10/16V_E300_BOX_150 | 1 |
| 2.2 | 2028654 | > VIBRATION DAMPER D.50X30 M10X28 | 1 |
| 2.3 | 2028281 | > NUT M10 DIN936 (ISO4035) 17H VZ | 1 |
| 2.4 | 4197083 | > HOLDER PUMP Helix 10/16 KIT | 1 |
| 2.5 | 4197084 | > HOLDER SWITCHBOX WILO Smart Control KIT | 1 |
| 2.6 | 4197117 | > LIFTING Siboost HELIX SC KIT | 1 |
| 3 | 4197072 | SUCTION SIDE Siboost Helix10/16 KIT | 1 |
| 3.1 | 2032623 | > NUT G1 1/2"SW55 MS | 1 |
| 3.2 | 2032616 | > O-RING ID.44X3,53N DIN3771 E7502 | 1 |
| 3.2 | 2534877 | > BALL TAP KDW40-H G11/2I-I-DN40 DVGW | 1 |
| 3.4 | 2032626 | > OVAL FLANGE D52-LK100 ST-VZ | 1 |
| 3.5 | 2032627 | > UNION INSERT DN40 LAPPED FLANGE | 1 |
| 3.6 | 2032628 | > O-RING ID.56,52X5,33N DIN3771 E7502 | 1 |
| 4 | 4197074 | DELIVERY SIDE Siboost Helix V10 KIT | 1 |
| 3.1 | 2032623 | > NUT G1 1/2"SW55 MS | 1 |
| 3.2 | 2032616 | > O-RING ID.44X3,53N DIN3771 E7502 | 1 |
| 3.3 | 2534877 | > BALL TAP KDW40-H G11/2I-I-DN40 DVGW | 1 |
| 3.4 | 2032626 | > OVAL FLANGE D52-LK100 ST-VZ | 1 |
| 4.1 | 2054316 | > UNION INSERT DN40 LAPPED FLANGE(W.SLOT) | 1 |
| 4.2 | 2054317 | > HOUSING F.NON RETURN VALVE(RV-IN) DN40 | 1 |
| 4.3 | 2032631 | > NON-RETURN-DEVICE DN40 (MTR)TYP RV-IN | 1 |
| 3.6 | 2032628 | > O-RING ID.56,52X5,33N DIN3771 E7502 | 1 |
| 5 | 2032642 | DIAPHREM TANK 8L/PN16 DIN4807/T5 KIT | 1 |
| 5.1 | 2045914 | > DIAPHREM TANK 8L TYP-DD 16BAR | 1 |
| 5.2 | 2027853 | > FLOW FITTING G3/4 FOR DIAPHRAGM VES. | 1 |
| 6 | 4197076 | PRESSURE SENSOR/ GAUGE 0-16BAR KIT | 1 |
| 6.1 | 2085909 | > PRESS.SENSOR 1/4" 0-16BAR 4-20MA VP. | 1 |
| 6.2 | 4197077 | > T-PIECE 1/4" VP. | 1 |
| 6.3 | 2028692 | > PRESSURE GAUGE NG63-PN16-G1/4 | 1 |

| Item | Article no. | Description | Quantity |
|---|---|---|---|
| 6.4 | 2028291 | > BALL TAP R1/4" PN42 GIACOMINI R254DL | 1 |
| 6.5 | 2028691 | > BLOWGUN 1/4" MS 30BAR VP. | 1 |
| 7 | 4197078 | PIPE DE3 R21/2''-3x11/2"+2x1/4x900 VP. | 1 |
| 8 | 4197080 | PIPE DE3 R21/2''-3x11/2"+2x1/4+1x3/4x900 | 1 |
| 9 | | W-CTRL-SCE-B-3x4,0KW-T4-FM-ND2 | 1 |
| Note: TO / BIS / JUSQU'AU 18/05/2014 | | | |
| 9 | 2541906 | W-CTRL-SCE-B-3x13A-T34-FM-ND2-AVC-PKG | 1 |
| Note: FROM / AB / À PARTIR DU 19/05/2014 | | | |
| 10 | 4197079 | PLUG G1/4"x10 AISI304 KIT | 1 |
| 11 | 2032654 | PLUG R3/4" MS VIEGA 1751 | 1 |
| 20 | 2521150 | ASSEMBLY WMS. DE-EB. +VP | 1 |
| 20.1 | 2028652 | > PRESSURE SWITCH PS3-ASR 1/(1,3) VP. | 1 |
| 20.2 | 2130983 | > PLUG PS3-415 WITH KABEL 1,5M 2NO VP. | 1 |
| 20.4 | 2028290 | > CROSSPIECE R1/4" MS-NICKEL | 1 |
| 20.5 | 2028687 | > PRESSURE GAUGE NG63 R1/4" HI.0-6BAR | 1 |
| 20.6 | 2054268 | > DUAL NIPPLE G1/4" x G1/4" MS VP. | 1 |
| 20.7 | 2028691 | > BLOWGUN 1/4" MS 30BAR VP. | 1 |
| 20.8 | 2028291 | > BALL TAP R1/4" PN42 GIACOMINI R254DL | 1 |

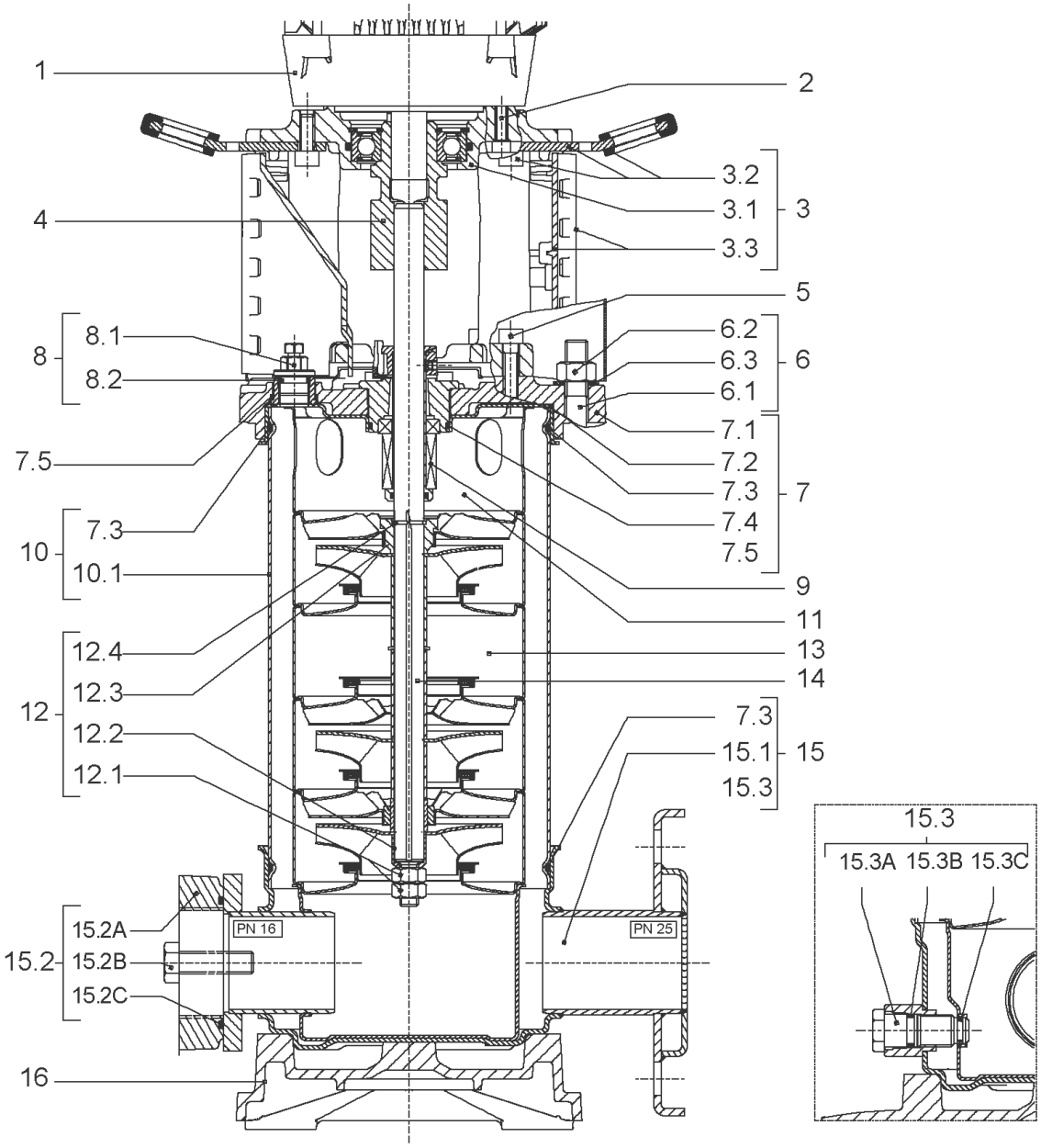
1
2
3.2
3.1
3
3.3
4
5
8.1
8
8.2
6.2
6.3
6
6.1
7.1
7.5
7.2
7.3
7
7.4
7.3
10
7.5
10.1
9
11
12.4
13
12.3
14
12
12.2
7.3
15.1
15
12.1
15.3
15.3
15.3A 15.3B 15.3C
15.2A
PN 16
PN 25
15.2
15.2B
15.2C
16

## HELIX VE1006-1/16/E/S

| Item | Article no. | Description | Quantity |
|---|---|---|---|
| 1 | | DRIVE HELIX-VE1006-IE2-ATB KIT | 1 |
| Note: MOTOR BRAND ATB | | | |
| 1 | | DRIVE HELIX-VE1006-IE2-WE KIT | 1 |
| Note: MOTOR BRAND WILO ELEC | | | |
| 1 | | DRIVE HELIX-VE1006-IE4-WE-KIT | 1 |
| Note: MOTOR BRAND WILO ELEC | | | |
| 2 | 4206025 | SCREW M8X45 (4 PIECES) | 1 |
| 3 | 4172789 | LANTERN FT130 HELIX V10 KIT | 1 |
| 3.1 | | > M+5_6_LANTERN_ONE-PIECE_FT130_CATA | 1 |
| 3.2 | 2127604 | > EYELET CPL.FT HELIX(2 PIECES) | 1 |
| 3.3 | 4159692 | > COUPLING PROTECTOR FT HELIX KIT | 1 |
| 4 | 4159710 | COUPLING D.16XD.28 FT130 HELIX KIT | 1 |
| 5 | 4159707 | SCREW M8X30 (4 PIECES) | 1 |
| 6 | 4177822 | STUD BOLT M12X413 KIT | 1 |
| 6.1 | | > TIE BOLT M12-413x18x30-1.4057 | 1 |
| 6.2 | 2094647 | > NUT M12 M12 ISO4032 VP. | 1 |
| 6.3 | 2123557 | > WASHER CS-12.4-24-1.6-NFE25 (4 PIECES) | 1 |
| 7 | 4210143 | STATIONARY RING HOLDER HELIX 6" EPDM | 1 |
| 7.2 | 2127607 | > STATIONARY RING HOLDER 6" HELIX 1.4301 V | 1 |
| 7.3 | 4176513 | > O-RING FOR PUMP JACKET VP. | 1 |
| 7.4 | 2127603 | > O-RING ID.37,6x2,4 EPDM VP. | 1 |
| 7.5 | 2127602 | > O-RING ID.21,35x2 EPDM VP. | 1 |
| 8 | 4159686 | FILING/PURGING PLUG HELIX EPDM KIT | 1 |
| 9 | 4171327 | SEAL-KIT-HELIX6-10-16 O/E KIT | 1 |
| 10 | 4177823 | HOUSING PIPES D.152X285 1.4301 KIT | 1 |
| 7.3 | 4176513 | > O-RING FOR PUMP JACKET VP. | 1 |
| 10.1 | | > HOUSING-PIPE Ø152-M+1006-304 | 1 |
| 11 | 4172791 | CENTERING STAGE-RETURN HELIX10 1.4301VP. | 1 |
| 12 | 4209273 | SHAFT EQUIPMENT HELIX V10 KIT | 1 |
| 12.1 | | > NUT-H-M10-A4.70 | 1 |
| 12.2 | | > SERRATED LOCK WASHER M+10M3-316L | 1 |
| 12.3 | | > IMPELLER STOP RING L33,6-304 | 1 |
| 12.4 | | > STOP-RUSH-1/2-D16xd2-M+316 | 1 |
| 13 | | HYDRAULIC HELIX V 1006 1.4307 | 1 |

| Item | Article no. | Description | Quantity |
|---|---|---|---|
| 14 | 4177825 | SHAFT D.16X405 1.4301 VP. | 1 |
| 15 | 4159682 | PUMP HOUSING HELIX DN50 PN16 1.4301 KIT | 1 |
| 7.3 | 4176513 | > O-RING FOR PUMP JACKET VP. | 1 |
| 15.1 | | > BLASTING PPE HOUSING V-PN16-DN50-304 | 1 |
| 15.2 | 4217893 | > COUNTER FLANGE-G1"1/2-PN16-GJL KIT | 1 |
| 15.3 | 4171321 | > PRIMING/DRAIN PLUG EPDM HELIX KIT | 1 |
| 16 | 4176517 | BASEPLATE V8/10 VP. | 1 |

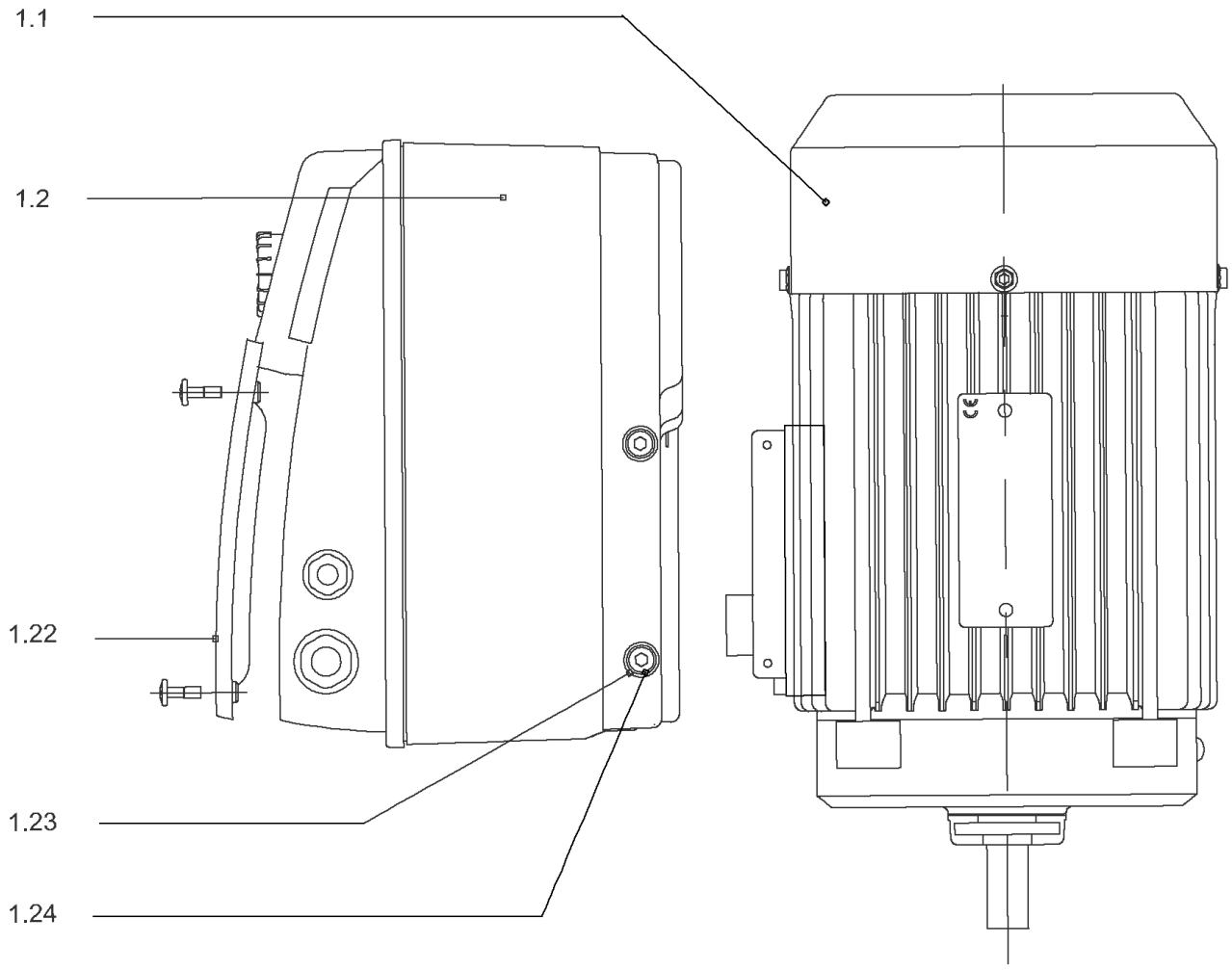
1.1
1.2
1.22
1.23
1.24

## DRIVE HELIX-VE1006-IE2-ATB KIT

| Item | Article no. | Description | Quantity |
|---|---|---|---|
| 1.1 | | MOTOR 4/2/112 3~ 380V 60HZ IE2 ATB VP. | 1 |
| Note: no longer available/nicht mehrlieferbar/n'est plus disponible | | | |
| | | SPARE PARTS MOTOR:ON REQUEST | 1 |
| 1.2 | 4184684 | MODULE HELIX-VE1006-IE2-ATB SET | 1 |
| 1.22 | 2054227 | > MODULE COVER/GASKET TL3/4 KIT | 1 |
| 1.23 | 4215716 | > SCREW M5X16 DIN912 8.8 A2A (4pieces) VP. | 1 |
| 1.24 | 2057978 | > RONDELLE A5,3 DIN6797 FST ZN (4 PIECES) | 1 |

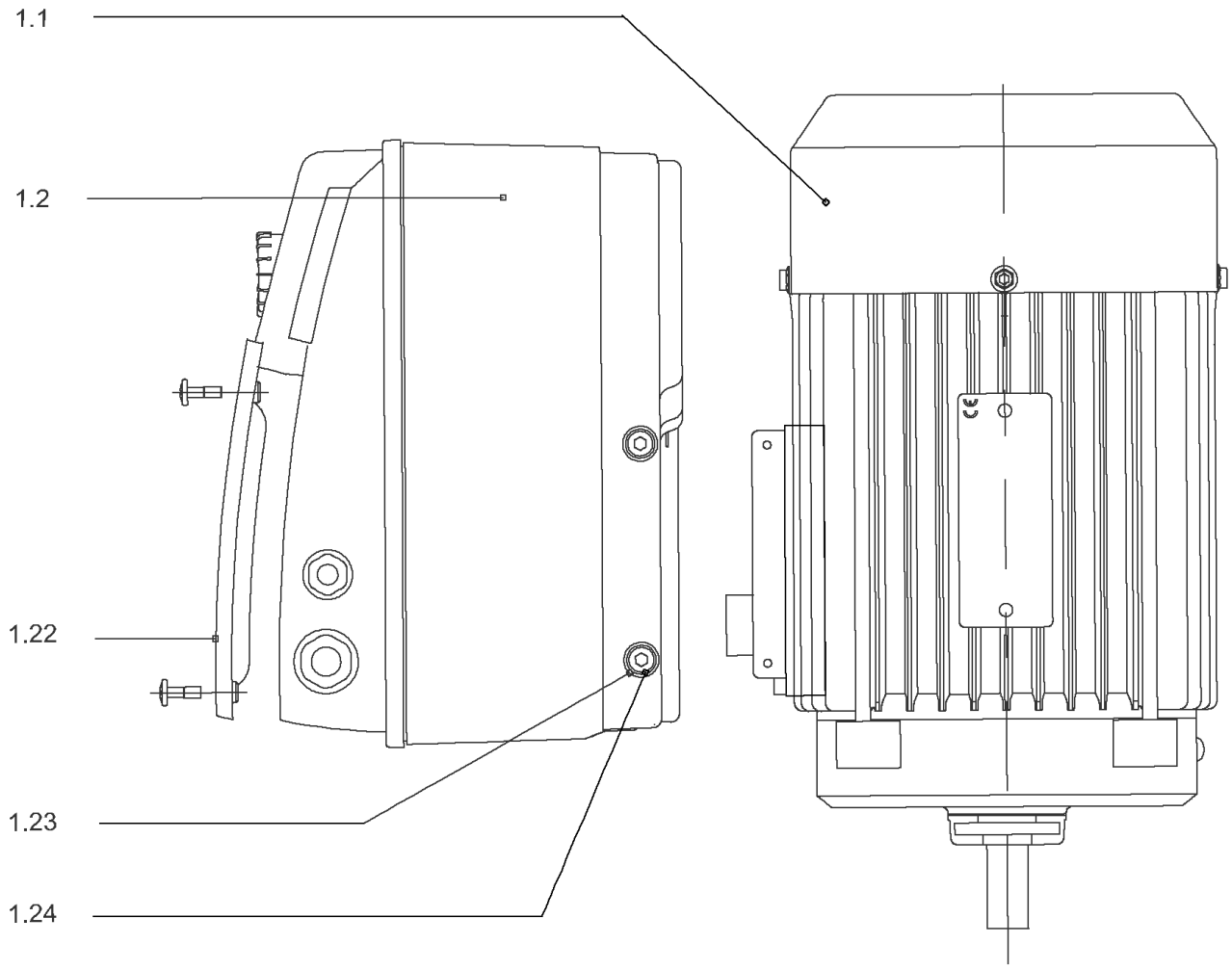
1.1
1.2
1.22
1.23
1.24

## DRIVE HELIX-VE1006-IE2-WE KIT

| Item | Article no. | Description | Quantity |
|---|---|---|---|
| 1.1 | 4188824 | MO.4/2/112 3~380V 60Hz IE2 WE VP. | 1 |
| | | SPARE PARTS MOTOR:ON REQUEST | 1 |
| 1.2 | 4186397 | MODULE HELIX-VE1006-IE2-WE SET | 1 |
| 1.22 | 2054227 | > MODULE COVER/GASKET TL3/4 KIT | 1 |
| 1.23 | 4215716 | > SCREW M5X16 DIN912 8.8 A2A (4pieces) VP. | 1 |
| 1.24 | 2057978 | > RONDELLE A5,3 DIN6797 FST ZN (4 PIECES) | 1 |

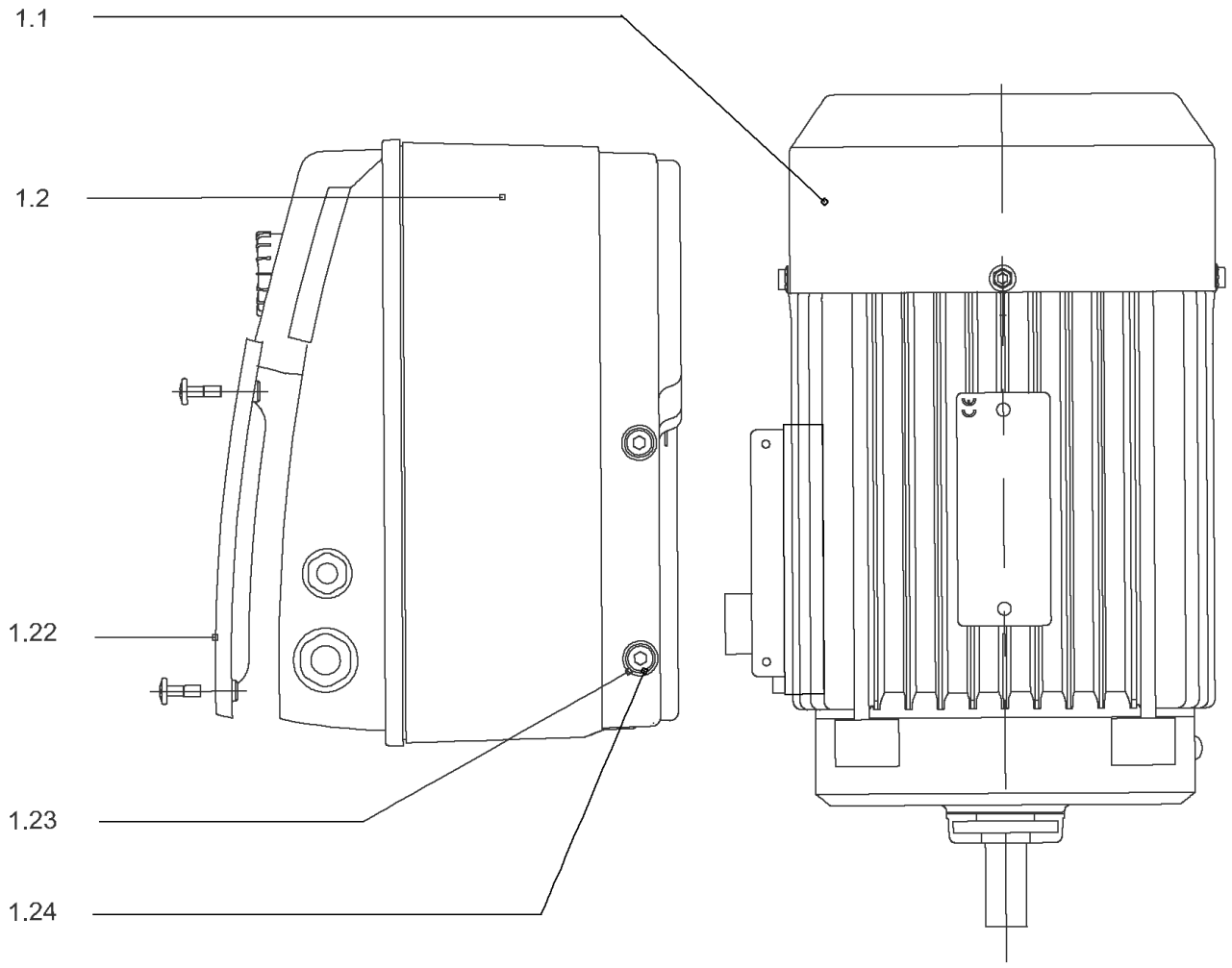
1.1
1.2
1.22
1.23
1.24

## DRIVE HELIX-VE1006-IE4-WE-KIT

| Item | Article no. | Description | Quantity |
|---|---|---|---|
| 1.1 | 4207924 | MOTOR 4/2/112 3~ 380V 60HZ IE4 WE VP. | 1 |
| | | SPARE PARTS MOTOR:ON REQUEST | 1 |
| 1.2 | 4209606 | MODULE HELIX-VE1006-IE4-WE KIT | 1 |
| 1.22 | 2054227 | > MODULE COVER/GASKET TL3/4 KIT | 1 |
| 1.23 | 4215716 | > SCREW M5X16 DIN912 8.8 A2A (4pieces) VP. | 1 |
| 1.24 | 2057978 | > RONDELLE A5,3 DIN6797 FST ZN (4 PIECES) | 1 |

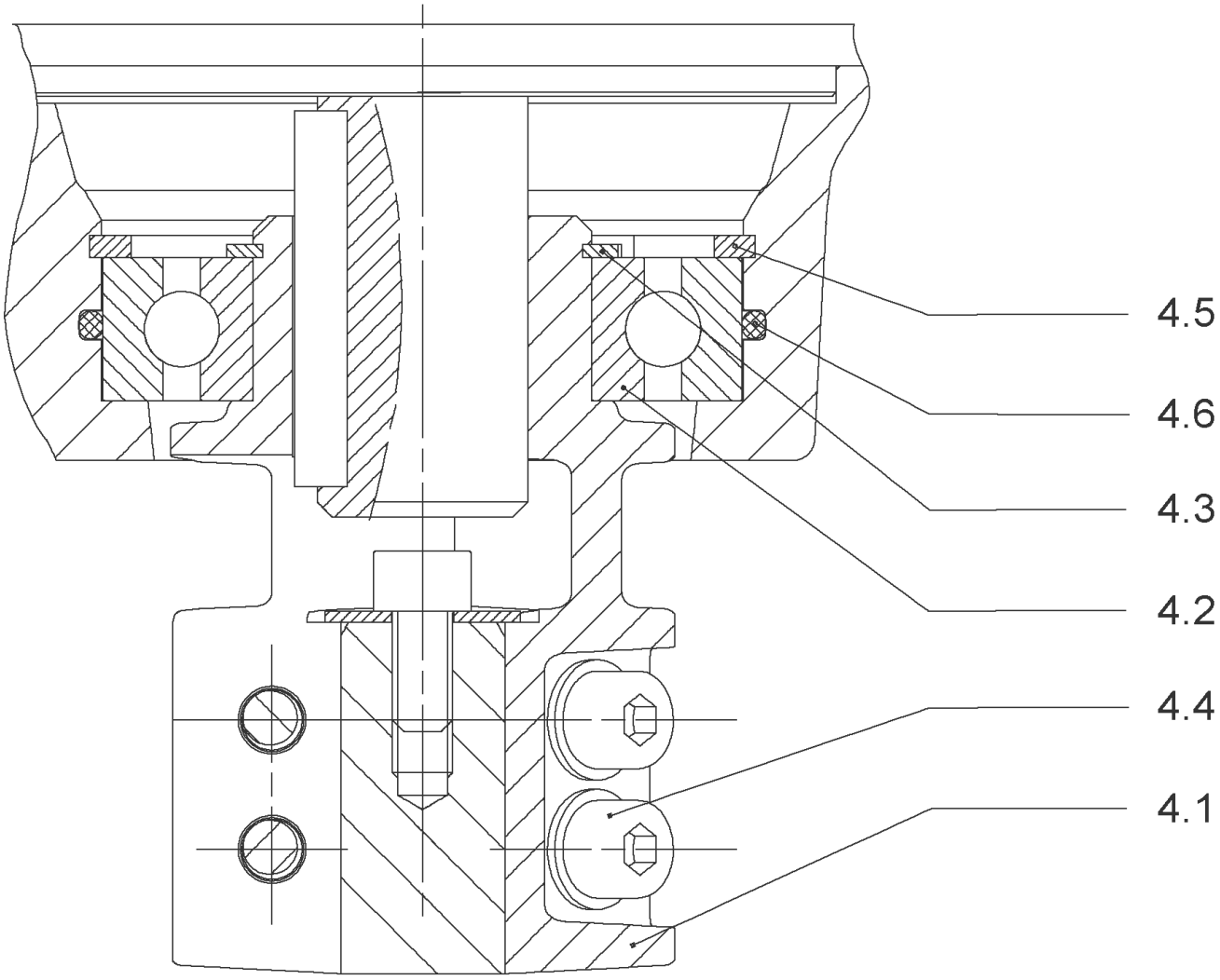
4.5
4.6
4.3
4.2
4.4
4.1

## COUPLING D.16XD.28 FT130 HELIX KIT (4159710)

| Item | Article no. | Description | Quantity |
|---|---|---|---|
| 4.1 | | COUPLING M+ Ø16XØ28 FT130 MACHINED | 1 |
| 4.2 | 2131022 | BALL BEARING 6209/ZZ-C3(HT)VP. | 1 |
| 4.3 | 4233930 | CIRCLIP-FOR-BORES-D45x1,75 VP. | 1 |
| 4.4 | 4157726 | SCREW KIT M8X30 (4 PIECES) | 1 |
| 4.5 | 4234252 | CIRCLIPS 85X3 VP. | 1 |
| 4.6 | 4234243 | O-RING 85X3 VP. | 1 |
| | | NOMEL CONTACT WASHER 8x16x1,4 STEEL ZC | 1 |

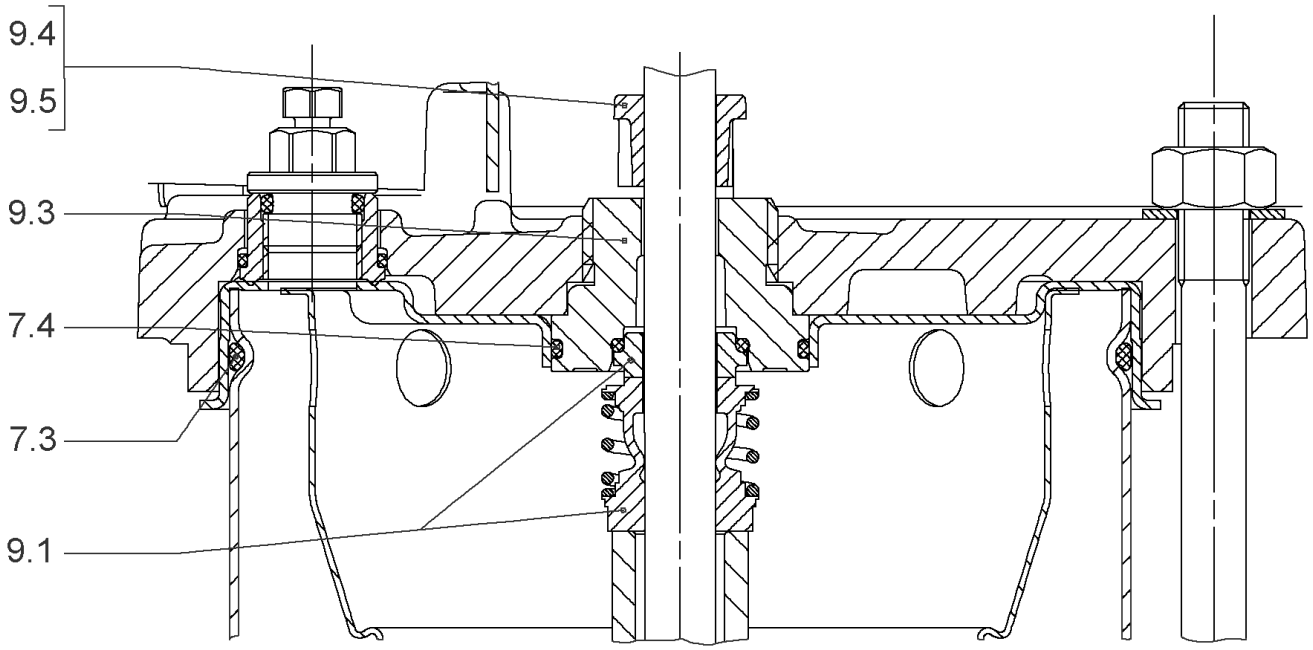
9.4
9.5
9.3
7.4
7.3
9.1

## SEAL-KIT-HELIX6-10-16 O/E KIT (4171327)

| Item | Article no. | Description | Quantity |
|---|---|---|---|
| 7.3 | 4176513 | O-RING FOR PUMP JACKET VP. | 1 |
| 7.4 | 2127603 | O-RING ID.37,6x2,4 EPDM VP. | 1 |
| 9.1 | 4177801 | MECH.SEAL HELIX6-10-16 O/E VP. | 1 |
| 9.3 | 4177798 | MACHINED RING HOLDER M+6" Ø16 304 VP. | 1 |
| 9.5 | 4177799 | MACHINED DRIVE RING Ø16 VP. | 1 |
| 9.4 | 4176520 | SCREW CH M5x5 A4-70 ( 3PIECES ) | 1 |

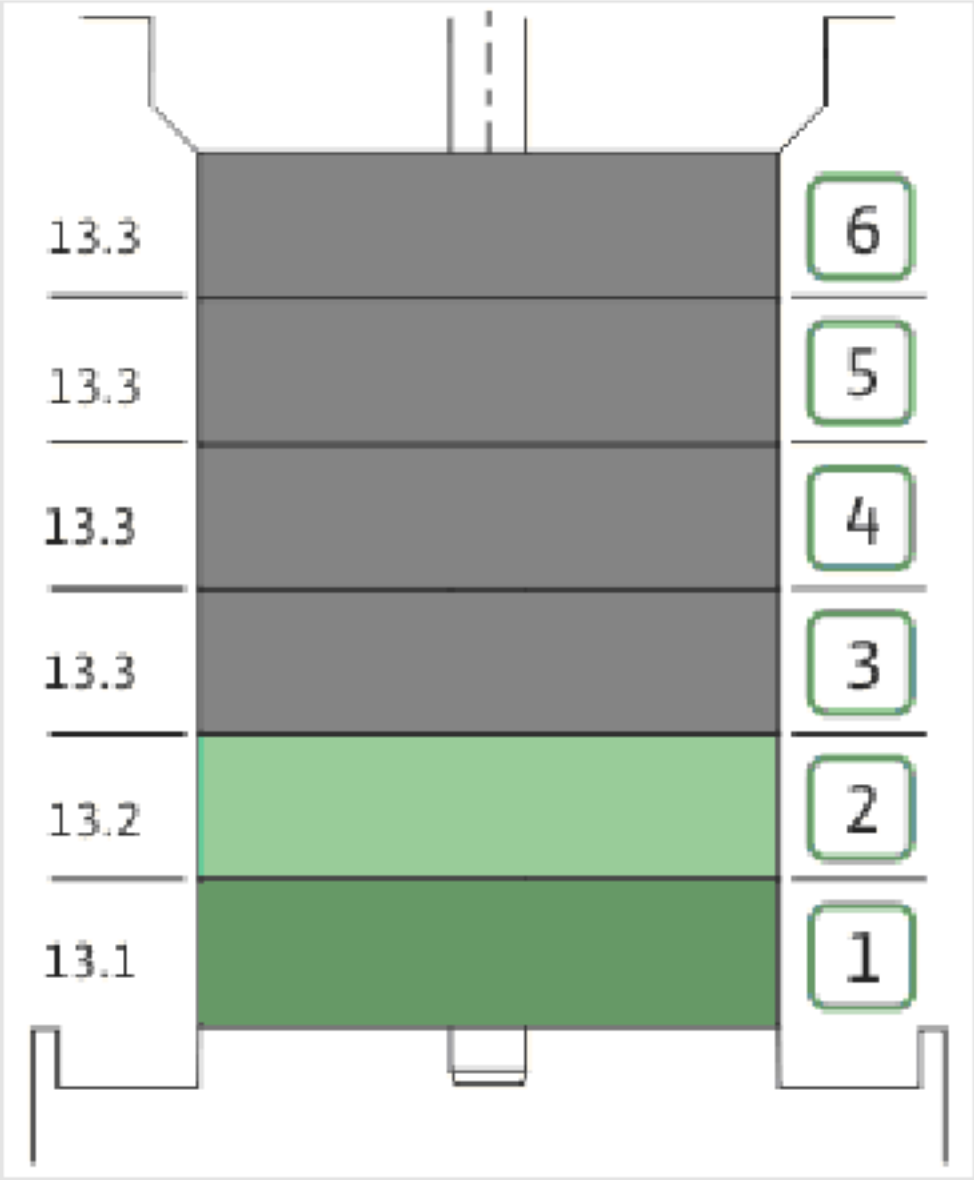
13.3
13.3
13.3
13.3
13.2
13.1
6
5
4
3
2
1

| Item | Article no. | Description | Quantity |
|---|---|---|---|
| 13.1 | 4171331 | STAGE HELIX10 1.4301KIT | 1 |
| | | > MACH.STG-CASING-WOGV-WNR-M+10-304 | 1 |
| | | > IMPELLER-M+10-304 | 1 |
| 13.2 | 4172792 | INTERMEDIATE STAGE HELIX 10 1.4301 KIT | 1 |
| | | > MACH.BEARING-STG-CASING-WNR-M+10-304 | 1 |
| | | > IMPELLER-M+10-304 | 1 |
| | | > SHAFT SLEEVE-SPACER-Ø19,35x18,465-304 | 1 |
| | | > SHAFT-SLEEVE-D16xD20x18-CW | 1 |
| 13.3 | 4172793 | INTERMEDIATE STAGE HELIX 10 1.4301 KIT | 1 |
| | | > MACH.STD-STG-CASING-WGV+NR-M+10-304 | 1 |
| | | > IMPELLER-M+10-304 | 1 |
| | | > IMPELLER SPACER Ø16,05X19,45-L36,465-304 | 1 |

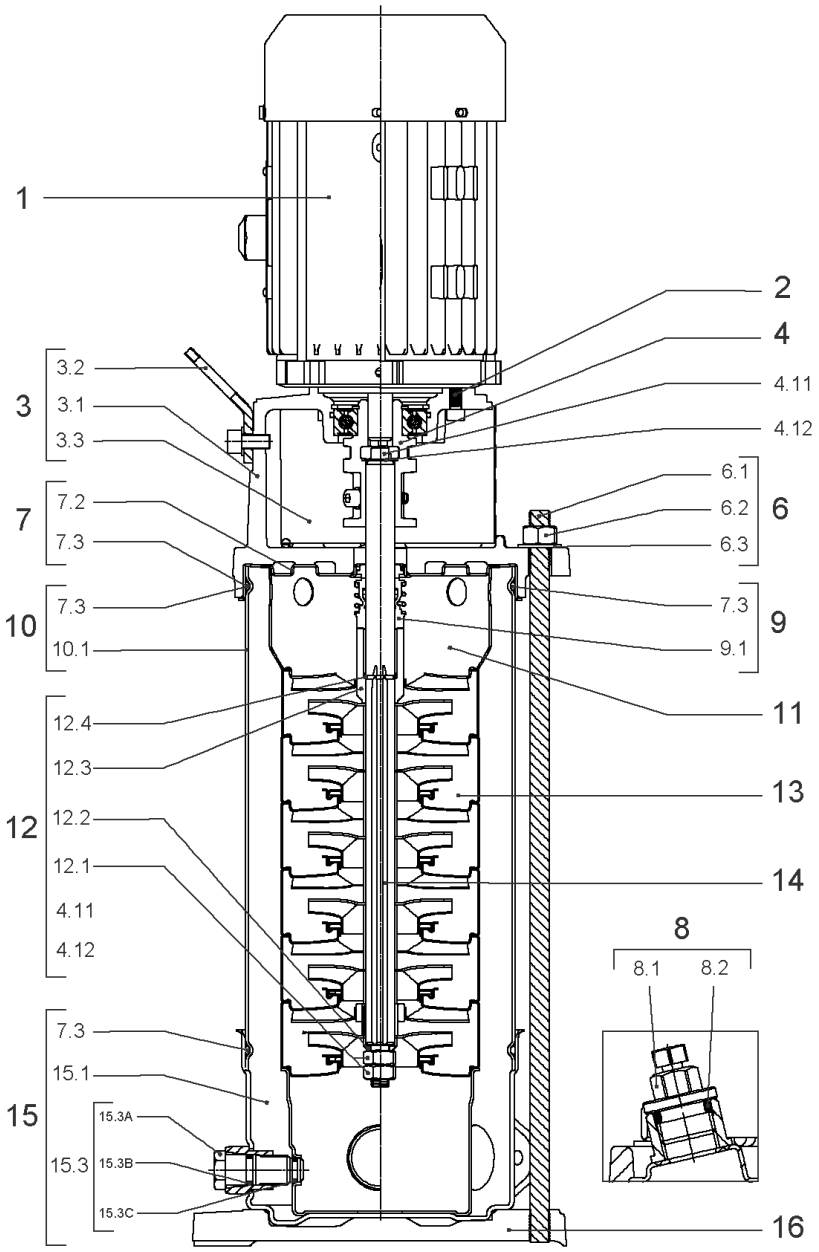
1
2
4
4.11
4.12
3
3.2
3.1
3.3
7
7.2
7.3
10
7.3
10.1
6
6.1
6.2
6.3
9
7.3
9.1
11
12
12.4
12.3
12.2
12.1
4.11
4.12
13
14
8
8.1
8.2
15
7.3
15.1
15.3
15.3A
15.3B
15.3C
16

## HELIX VE1006-1/16/E/S (4201555)

| Item | Article no. | Description | Quantity |
|---|---|---|---|
| 1 | | DRIVE HELIX-VE1006-IE4-WE-KIT | 1 |
| Note: MOTOR BRAND WILO ELEC | | | |
| | | SPARE PARTS MOTOR:ON REQUEST | 1 |
| 2 | 4159707 | SCREW M8X30 (4 PIECES) | 1 |
| 3 | 4214473 | LANTERN FT130 HELIX KIT | 1 |
| 3.1 | | > LANT-MOT-VMI-ReDTC6"-FT130-MACHINED+CATA | 1 |
| 3.2 | 4184852 | > EYELET CPL.FT HELIX (2 PIECES) | 1 |
| 3.3 | 4213782 | > COUPLING PROTECTOR FT115/130 HELIX KIT | 1 |
| 4 | 4159710 | COUPLING D.16XD.28 FT130 HELIX KIT | 1 |
| 6 | 4177822 | STUD BOLT M12X413 KIT | 1 |
| 6.1 | | > TIE BOLT M12-413x18x30-1.4057 | 1 |
| 6.2 | 2094647 | > NUT M12 M12 ISO4032 VP. | 1 |
| 6.3 | 2123557 | > WASHER CS-12.4-24-1.6-NFE25 (4 PIECES) | 1 |
| 7 | 4214481 | STATIONARY RING HOLDER HELIX D27 ReDTC | 1 |
| 7.2 | 4214479 | > STATIONARY RING HOLDER HELIX D27 VP. | 1 |
| 7.3 | 4176513 | > O-RING FOR PUMP JACKET VP. | 1 |
| 8 | 4212724 | FILING/PURGING PLUG HELIX ReDTC KIT | 1 |
| 8.1 | | > FILLING PLUG MVI6"-304 | 1 |
| 8.2 | 4177800 | > O-RING EPDM PLUG HELIX VP. | 1 |
| 9 | 4214483 | MECH.SEAL HELIX6-10-16 O/E ReDTC KIT | 1 |
| 9.1 | 4177801 | > MECH.SEAL HELIX6-10-16 O/E VP. | 1 |
| 7.3 | 4176513 | > O-RING FOR PUMP JACKET VP. | 1 |
| 10 | 4177823 | HOUSING PIPES D.152X285 1.4301 KIT | 1 |
| 7.3 | 4176513 | > O-RING FOR PUMP JACKET VP. | 1 |
| 10.1 | | > HOUSING-PIPE Ø152-M+1006-304 | 1 |
| 11 | 4172791 | CENTERING STAGE-RETURN HELIX10 1.4301VP. | 1 |
| 12 | 4214517 | SHAFT EQUIPMENT HELIX V10 ReDTC KIT | 1 |
| 12.1 | | > NUT-H-M10-A4.70 | 1 |
| 12.2 | | > SERRATED LOCK WASHER M+10M3-316L | 1 |
| 12.3 | | > 1/2-SNAP-RING-6/10M3-316L | 1 |
| 12.4 | | > STOP-RUSH-1/2-D16xd2-M+316 | 1 |
| 4.11 | | > SCREW CHC-M6X14-8.8-ISO4762-GEOMET500A | 1 |
| 4.12 | | > WASHER D.24 L6U ZINK | 1 |
| 13 | | HYDRAULIC HELIX V 1006 1.4307 | 1 |

| Item | Article no. | Description | Quantity |
|---|---|---|---|
| 14 | 4214500 | SHAFT D.16X353 HELIX 1.4057 VP. | 1 |
| 15 | 4159682 | PUMP HOUSING HELIX DN50 PN16 1.4301 KIT | 1 |
| 7.3 | 4176513 | > O-RING FOR PUMP JACKET VP. | 1 |
| 15.1 | | > BLASTING PPE HOUSING V-PN16-DN50-304 | 1 |
| 15.2 | 4217893 | > COUNTER FLANGE-G1"1/2-PN16-GJL KIT | 1 |
| 15.3 | 4171321 | > PRIMING/DRAIN PLUG EPDM HELIX KIT | 1 |
| 16 | 4176517 | BASEPLATE V8/10 VP. | 1 |

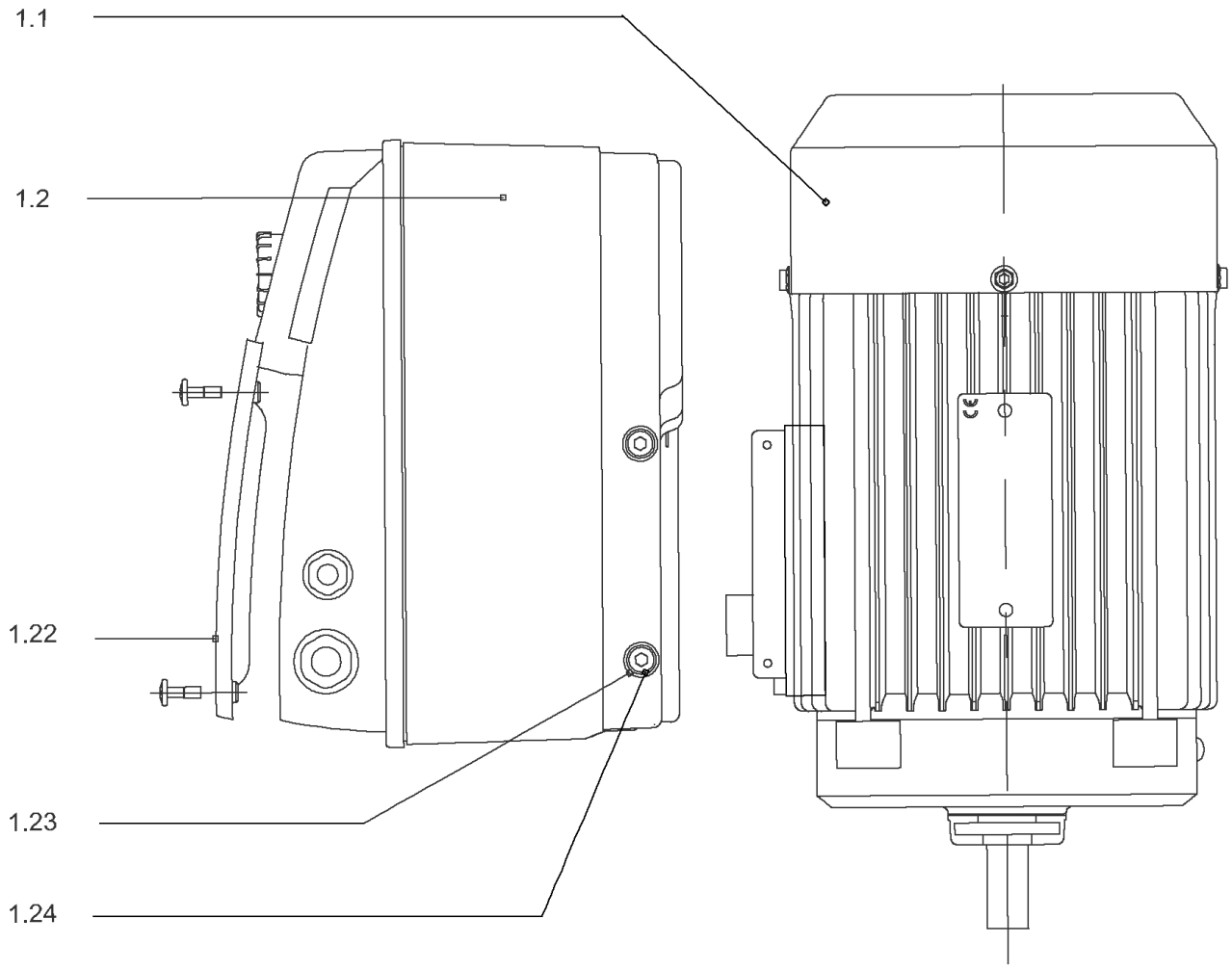
1.1
1.2
1.22
1.23
1.24

## DRIVE HELIX-VE1006-IE4-WE-KIT

| Item | Article no. | Description | Quantity |
|---|---|---|---|
| 1.1 | 4207924 | MOTOR 4/2/112 3~ 380V 60HZ IE4 WE VP. | 1 |
| | | SPARE PARTS MOTOR:ON REQUEST | 1 |
| 1.2 | 4209606 | MODULE HELIX-VE1006-IE4-WE KIT | 1 |
| 1.22 | 2054227 | > MODULE COVER/GASKET TL3/4 KIT | 1 |
| 1.23 | 4215716 | > SCREW M5X16 DIN912 8.8 A2A (4pieces) VP. | 1 |
| 1.24 | 2057978 | > RONDELLE A5,3 DIN6797 FST ZN (4 PIECES) | 1 |

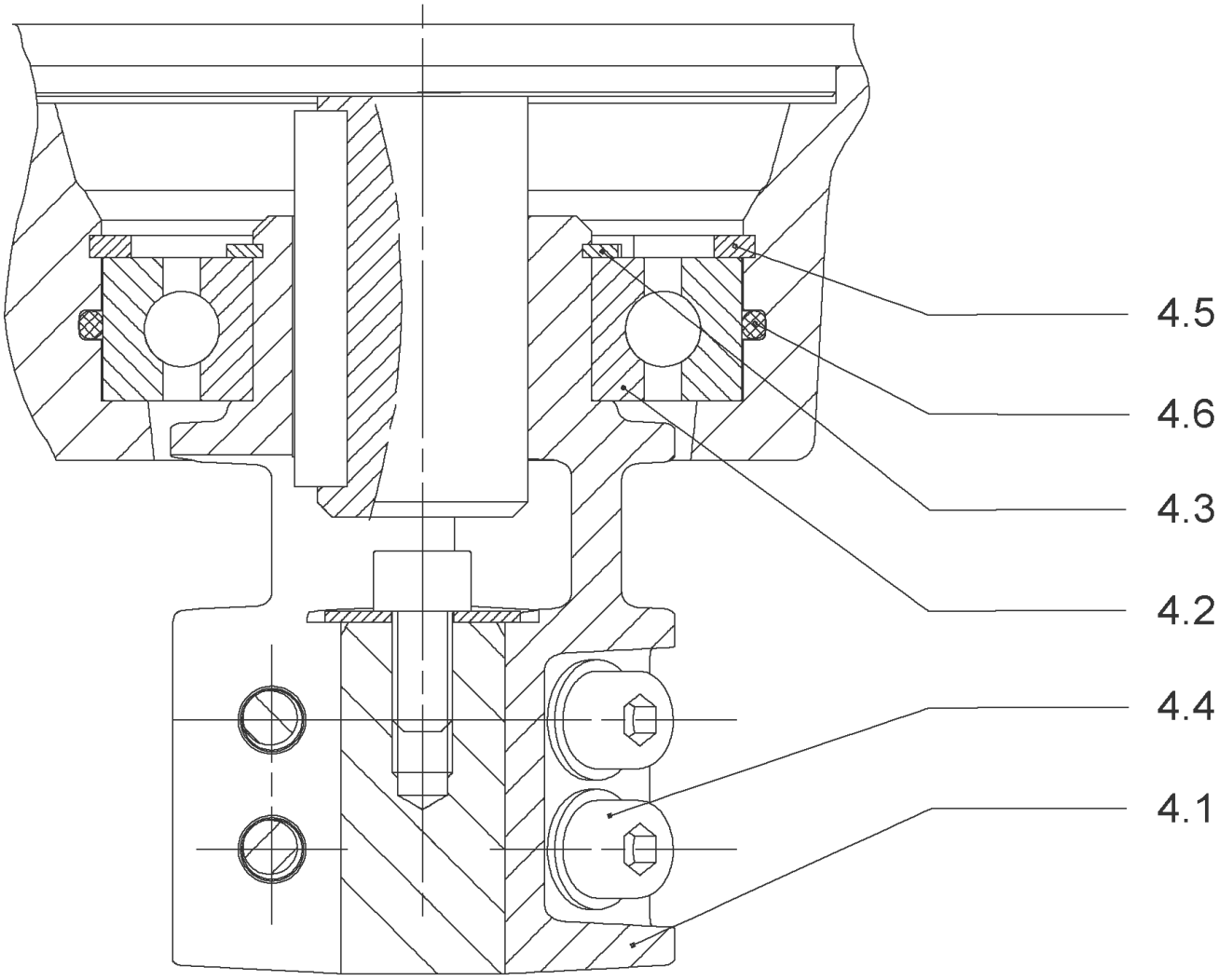
4.5
4.6
4.3
4.2
4.4
4.1

## COUPLING D.16XD.28 FT130 HELIX KIT (4159710)

| Item | Article no. | Description | Quantity |
|---|---|---|---|
| 4.1 | | COUPLING M+ Ø16XØ28 FT130 MACHINED | 1 |
| 4.2 | 2131022 | BALL BEARING 6209/ZZ-C3(HT)VP. | 1 |
| 4.3 | 4233930 | CIRCLIP-FOR-BORES-D45x1,75 VP. | 1 |
| 4.4 | 4157726 | SCREW KIT M8X30 (4 PIECES) | 1 |
| 4.5 | 4234252 | CIRCLIPS 85X3 VP. | 1 |
| 4.6 | 4234243 | O-RING 85X3 VP. | 1 |
| | | NOMEL CONTACT WASHER 8x16x1,4 STEEL ZC | 1 |

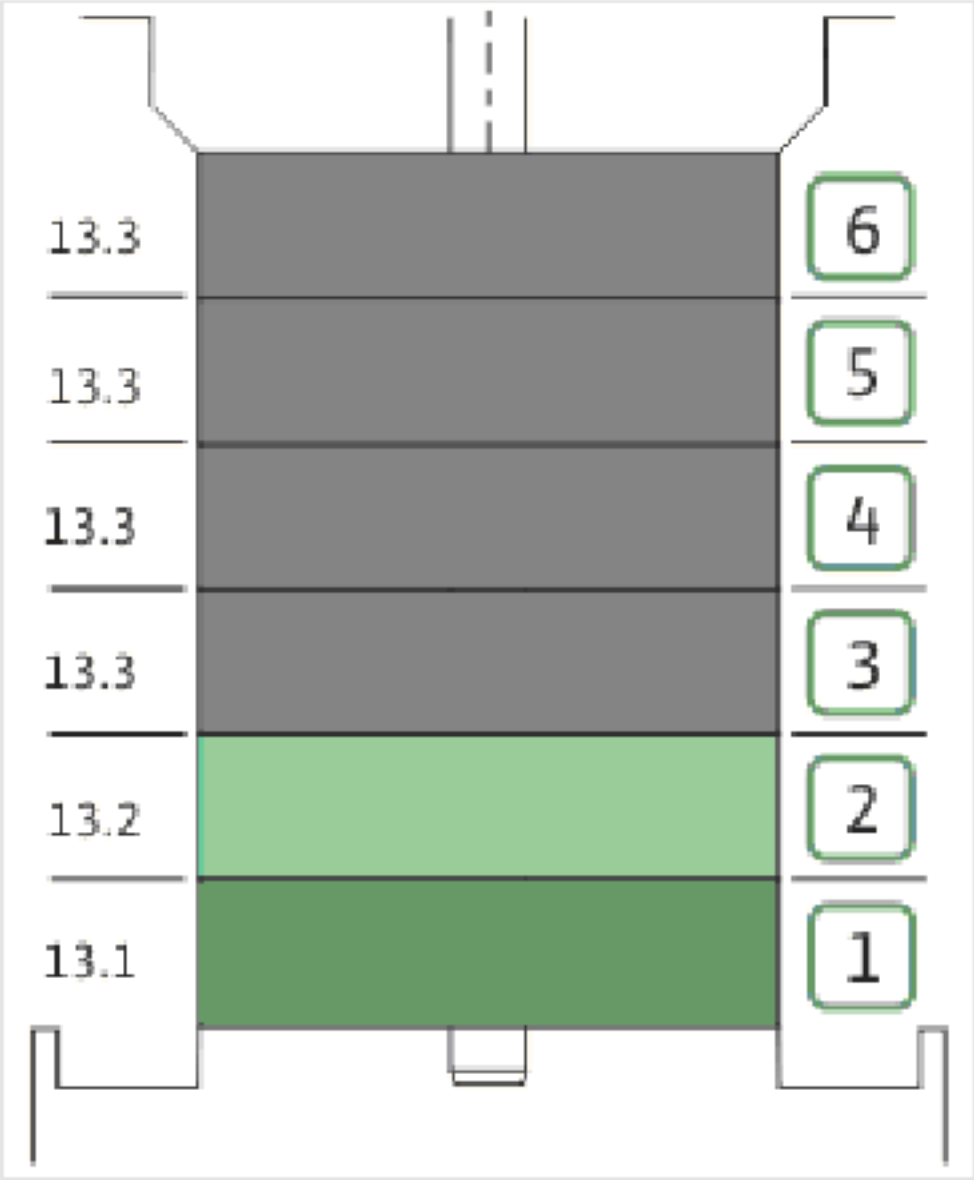
13.3
13.3
13.3
13.3
13.2
13.1
6
5
4
3
2
1

| Item | Article no. | Description | Quantity |
|---|---|---|---|
| 13.1 | 4171331 | STAGE HELIX10 1.4301KIT | 1 |
| | | > MACH.STG-CASING-WOGV-WNR-M+10-304 | 1 |
| | | > IMPELLER-M+10-304 | 1 |
| 13.2 | 4172792 | INTERMEDIATE STAGE HELIX 10 1.4301 KIT | 1 |
| | | > MACH.BEARING-STG-CASING-WNR-M+10-304 | 1 |
| | | > IMPELLER-M+10-304 | 1 |
| | | > SHAFT SLEEVE-SPACER-Ø19,35x18,465-304 | 1 |
| | | > SHAFT-SLEEVE-D16xD20x18-CW | 1 |
| 13.3 | 4172793 | INTERMEDIATE STAGE HELIX 10 1.4301 KIT | 1 |
| | | > MACH.STD-STG-CASING-WGV+NR-M+10-304 | 1 |
| | | > IMPELLER-M+10-304 | 1 |
| | | > IMPELLER SPACER Ø16,05X19,45-L36,465-304 | 1 |

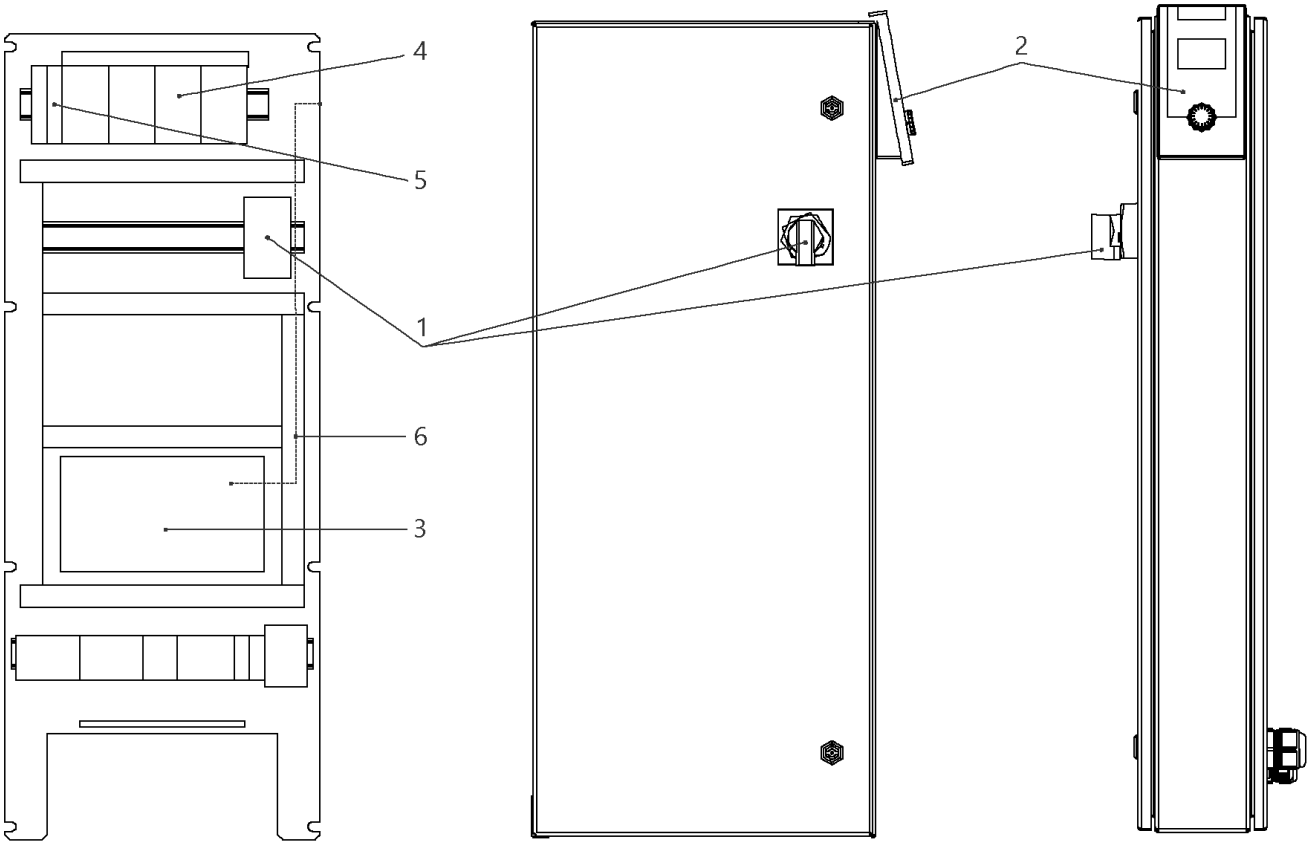
4
5
1
6
3
2

## W-CTRL-SCE-B-3x4,0KW-T4-FM-ND2

| Item | Article no. | Description | Quantity |
|---|---|---|---|
| 1 | 2104473 | MAIN SWITCH OT63F3 L105 KIT | 1 |
| 2 | 4184784 | CONTROL PANEL HMI SC KIT | 1 |
| 2 | 4185259 | ASSEMBLY DISPLAY SC PKG VP. | 1 |
| 3 | 4185257 | ASSEMBLY CPU SCe Booster VP. | 1 |
| 4 | 2051217 | AUTOM.CIRCUIT BREAKER S203 B16 TO7,5kW | 1 |
| 5 | 2046288 | CIRCUIT BREAKER S201 B16 | 1 |
| 6 | 4194956 | PATCH CABLE RJ45 CAT6 1,0M BLUE SC-PANEL | 1 |

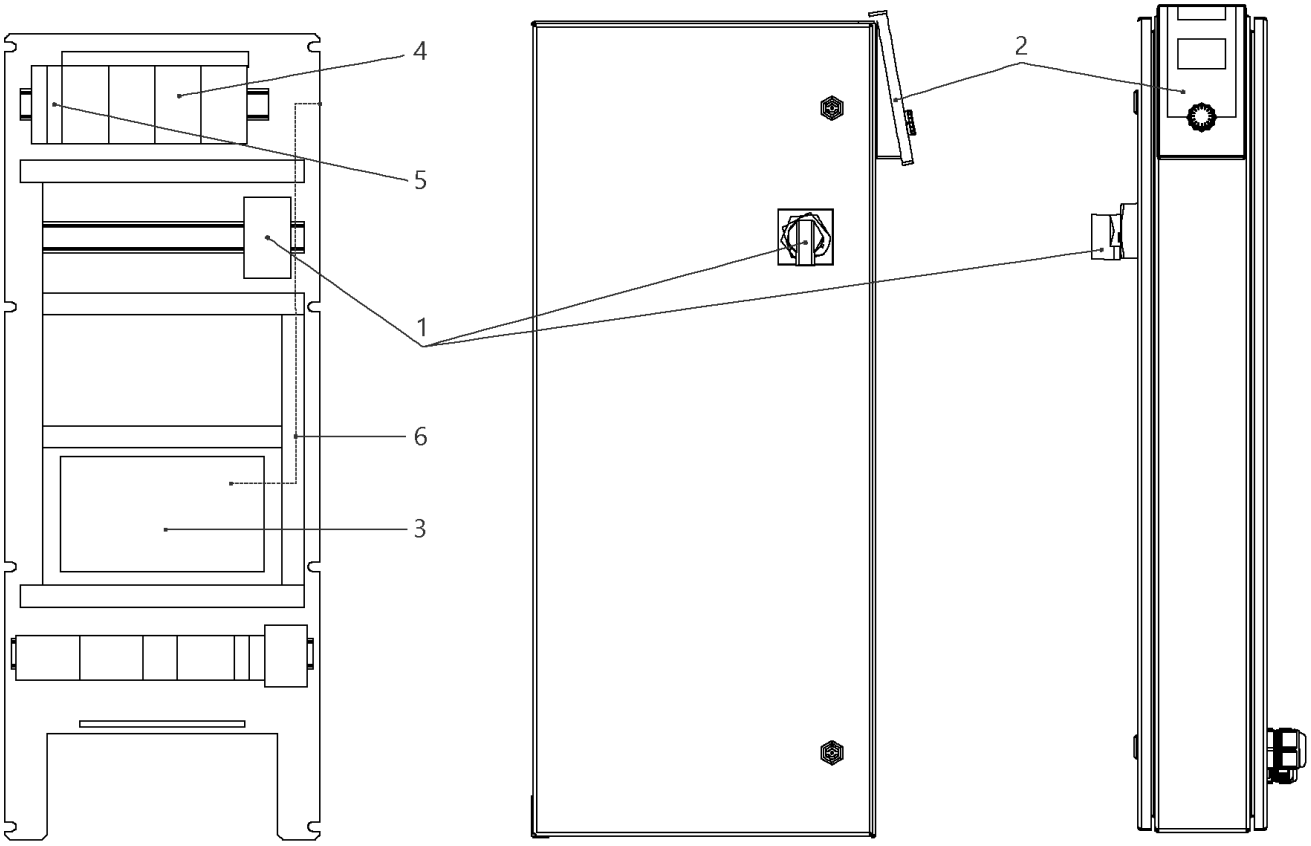
4
5
1
6
3
2

## W-CTRL-SCE-B-3x13A-T34-FM-ND2-AVC-PKG (2541906)

| Item | Article no. | Description | Quantity |
|---|---|---|---|
| 1 | 2104473 | MAIN SWITCH OT63F3 L105 KIT | 1 |
| 2 | 4184784 | CONTROL PANEL HMI SC KIT | 1 |
| 2 | 4185259 | ASSEMBLY DISPLAY SC PKG VP. | 1 |
| Note: DISPLAY ALONE / PLATINE SEULE | | | |
| 3 | 4185257 | ASSEMBLY CPU SCe Booster VP. | 1 |
| 4 | 2051217 | AUTOM.CIRCUIT BREAKER S203 B16 TO7,5kW | 1 |
| 5 | 2046288 | CIRCUIT BREAKER S201 B16 | 1 |
| 6 | 4194956 | PATCH CABLE RJ45 CAT6 1,0M BLUE SC-PANEL | 1 |

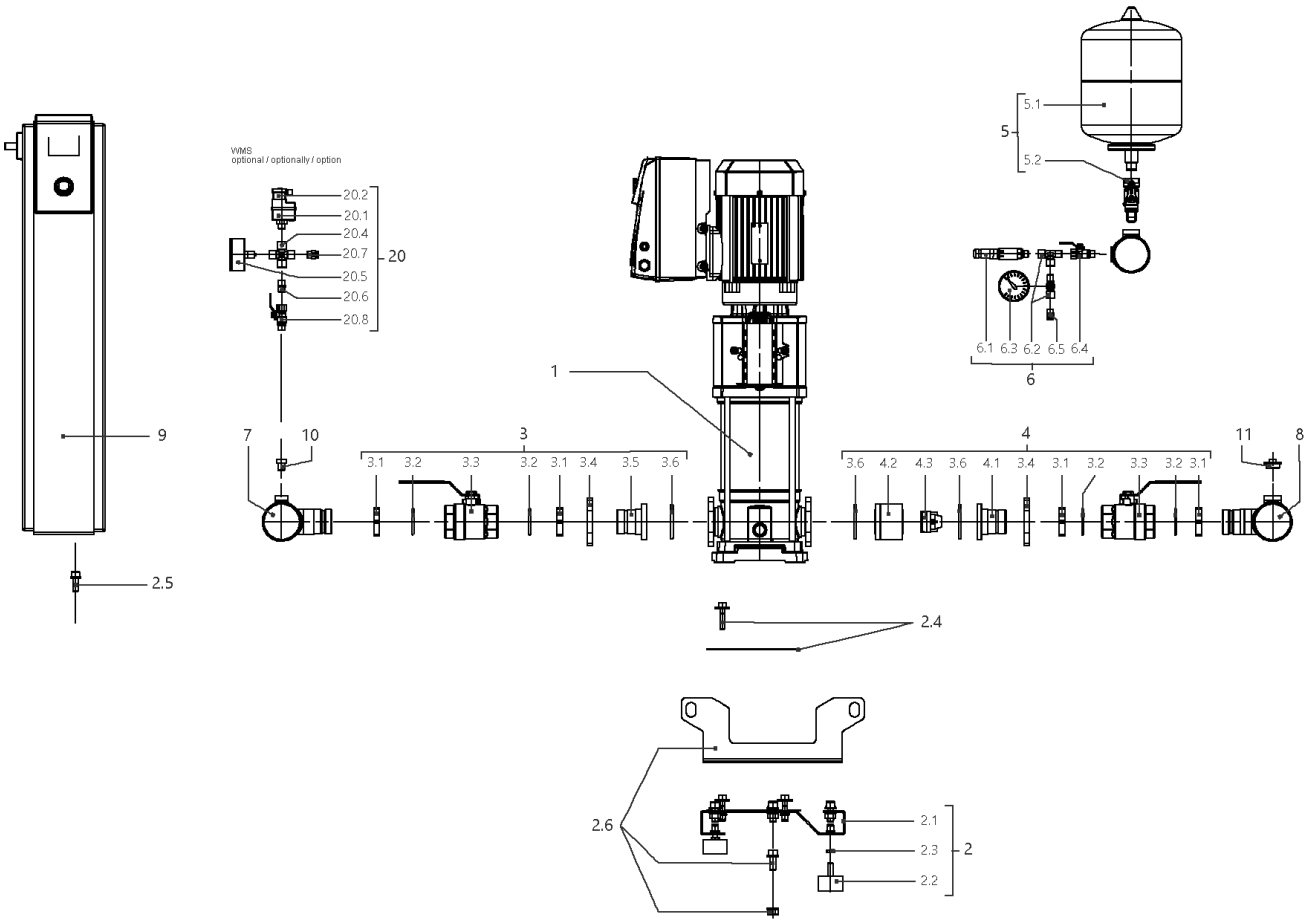
VVMS
optional / optionally / option
20.2
20.1
20.4
20.7
20.5
20.6
20.8
20
5.1
5
5.2
6.1 6.3 6.2 6.5 6.4
6
1
9
7
10
3
3.1 3.2 3.3 3.2 3.1 3.4 3.5 3.6
4
3.6 4.2 4.3 3.6 4.1 3.4 3.1 3.2 3.3 3.2 3.1
11
8
2.5
2.4
2.6
2.1
2.3
2.2
2

## SiBoost Smart 3HELIX VE1009 (2536352)

| Item | Article no. | Description | Quantity |
|---|---|---|---|
| 1 | | HELIX VE1009-1/16/E/KS/FF240/EC | 1 |
| 2 | 4197116 | BASE PLATE DE3 1150x420 KIT | 1 |
| 2.1 | | > BASEPLATE_3x4/6/10/16V_E300_BOX_150 | 1 |
| 2.2 | 2028654 | > VIBRATION DAMPER D.50X30 M10X28 | 1 |
| 2.3 | 2028281 | > NUT M10 DIN936 (ISO4035) 17H VZ | 1 |
| 2.4 | 4197083 | > HOLDER PUMP Helix 10/16 KIT | 1 |
| 2.5 | 4197084 | > HOLDER SWITCHBOX WILO Smart Control KIT | 1 |
| 2.6 | 4197117 | > LIFTING Siboost HELIX SC KIT | 1 |
| 3 | 4197072 | SUCTION SIDE Siboost Helix10/16 KIT | 1 |
| 3.1 | 2032623 | > NUT G1 1/2"SW55 MS | 1 |
| 3.2 | 2032616 | > O-RING ID.44X3,53N DIN3771 E7502 | 1 |
| 3.2 | 2534877 | > BALL TAP KDW40-H G11/2I-I-DN40 DVGW | 1 |
| 3.4 | 2032626 | > OVAL FLANGE D52-LK100 ST-VZ | 1 |
| 3.5 | 2032627 | > UNION INSERT DN40 LAPPED FLANGE | 1 |
| 3.6 | 2032628 | > O-RING ID.56,52X5,33N DIN3771 E7502 | 1 |
| 4 | 4197074 | DELIVERY SIDE Siboost Helix V10 KIT | 1 |
| 3.1 | 2032623 | > NUT G1 1/2"SW55 MS | 1 |
| 3.2 | 2032616 | > O-RING ID.44X3,53N DIN3771 E7502 | 1 |
| 3.3 | 2534877 | > BALL TAP KDW40-H G11/2I-I-DN40 DVGW | 1 |
| 3.4 | 2032626 | > OVAL FLANGE D52-LK100 ST-VZ | 1 |
| 4.1 | 2054316 | > UNION INSERT DN40 LAPPED FLANGE(W.SLOT) | 1 |
| 4.2 | 2054317 | > HOUSING F.NON RETURN VALVE(RV-IN) DN40 | 1 |
| 4.3 | 2032631 | > NON-RETURN-DEVICE DN40 (MTR)TYP RV-IN | 1 |
| 3.6 | 2032628 | > O-RING ID.56,52X5,33N DIN3771 E7502 | 1 |
| 5 | 2032642 | DIAPHREM TANK 8L/PN16 DIN4807/T5 KIT | 1 |
| 5.1 | 2045914 | > DIAPHREM TANK 8L TYP-DD 16BAR | 1 |
| 5.2 | 2027853 | > FLOW FITTING G3/4 FOR DIAPHRAGM VES. | 1 |
| 6 | 4197076 | PRESSURE SENSOR/ GAUGE 0-16BAR KIT | 1 |
| 6.1 | 2085909 | > PRESS.SENSOR 1/4" 0-16BAR 4-20MA VP. | 1 |
| 6.2 | 4197077 | > T-PIECE 1/4" VP. | 1 |
| 6.3 | 2028692 | > PRESSURE GAUGE NG63-PN16-G1/4 | 1 |
| 6.4 | 2028291 | > BALL TAP R1/4" PN42 GIACOMINI R254DL | 1 |
| 6.5 | 2028691 | > BLOWGUN 1/4" MS 30BAR VP. | 1 |
| 7 | 4197078 | PIPE DE3 R21/2''-3x11/2"+2x1/4x900 VP. | 1 |

| Item | Article no. | Description | Quantity |
|---|---|---|---|
| 8 | 4197080 | PIPE DE3 R21/2''-3x11/2"+2x1/4+1x3/4x900 | 1 |
| 9 | | W-CTRL-SCE-B-3x5,5KW-T4-FM-ND2 | 1 |
| Note: TO / BIS / JUSQU'AU 18/05/2014 | | | |
| 9 | 2541906 | W-CTRL-SCE-B-3x13A-T34-FM-ND2-AVC-PKG | 1 |
| Note: FROM / AB / À PARTIR DU 19/05/2014 | | | |
| 10 | 4197079 | PLUG G1/4"x10 AISI304 KIT | 1 |
| 11 | 2032654 | PLUG R3/4" MS VIEGA 1751 | 1 |
| 20 | 2521150 | ASSEMBLY WMS. DE-EB. +VP | 1 |
| 20.1 | 2028652 | > PRESSURE SWITCH PS3-ASR 1/(1,3) VP. | 1 |
| 20.2 | 2130983 | > PLUG PS3-415 WITH KABEL 1,5M 2NO VP. | 1 |
| 20.4 | 2028290 | > CROSSPIECE R1/4" MS-NICKEL | 1 |
| 20.5 | 2028687 | > PRESSURE GAUGE NG63 R1/4" HI.0-6BAR | 1 |
| 20.6 | 2054268 | > DUAL NIPPLE G1/4" x G1/4" MS VP. | 1 |
| 20.7 | 2028691 | > BLOWGUN 1/4" MS 30BAR VP. | 1 |
| 20.8 | 2028291 | > BALL TAP R1/4" PN42 GIACOMINI R254DL | 1 |

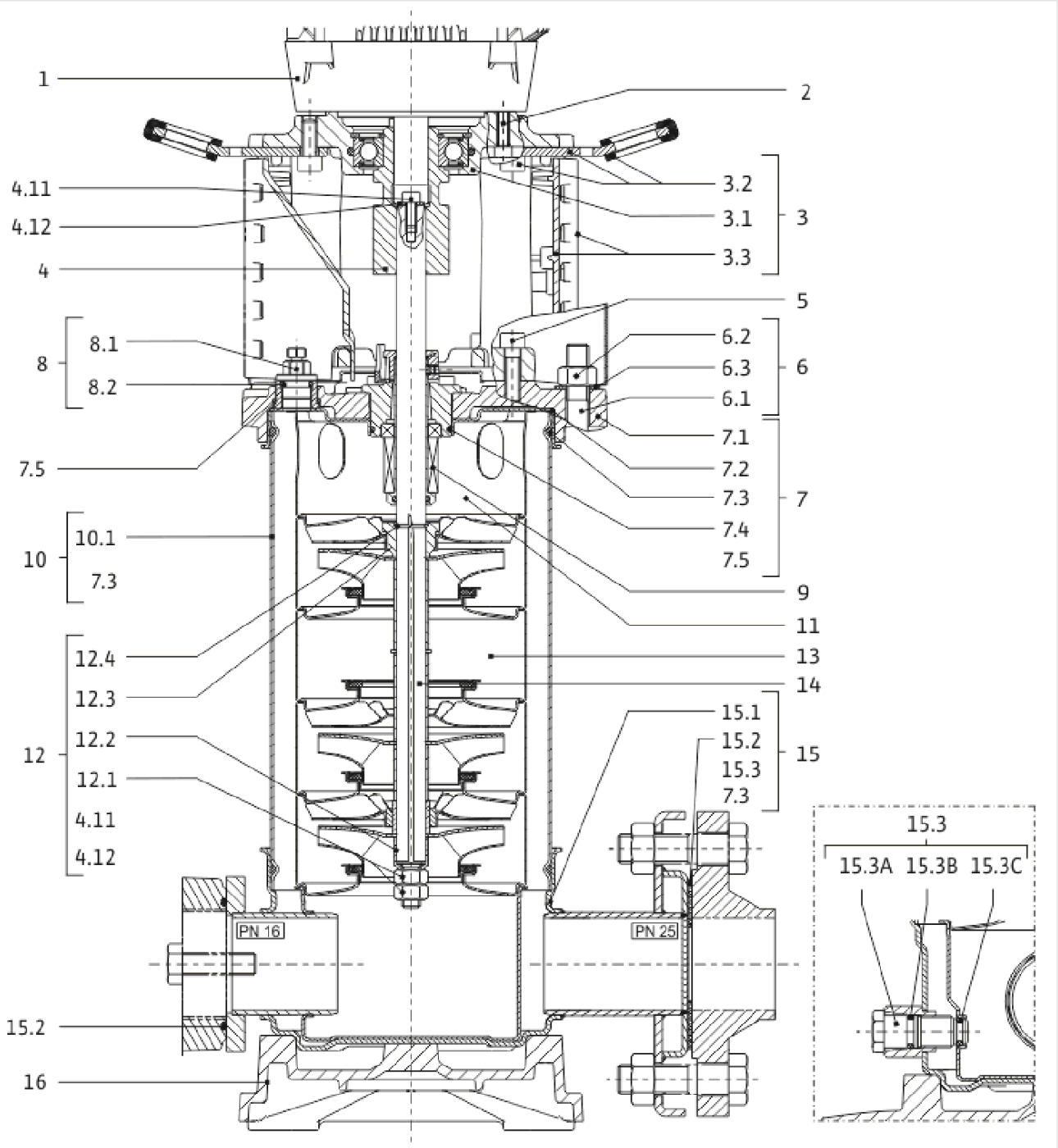
1
2
4.11
4.12
4
3.2
3.1
3.3
3
5
8
8.1
8.2
6.2
6.3
6.1
6
7.5
7.1
7.2
7.3
7.4
7.5
7
10
10.1
7.3
9
11
12
12.4
12.3
12.2
12.1
4.11
4.12
13
14
15.1
15.2
15.3
7.3
15
PN 16
PN 25
15.2
16
15.3
15.3A
15.3B
15.3C

## HELIX VE1009-1/16/E/KS/FF240/EC

| Item | Article no. | Description | Quantity |
|---|---|---|---|
| 1 | | DRIVE HELIX-VE1009-FF24-IE2-ATB KIT | 1 |
| Note: MOTOR BRAND SIEMENS | | | |
| 2 | 4174093 | SCREW M12X50 (4 PIECES) | 1 |
| 3 | 4197828 | LANTERN FF240 HELIX KIT | 1 |
| 3.1 | | > LANTERN FF240 M+6" JL250 MACHINING+CATA | 1 |
| 3.2 | 4186346 | > EYELET CPL.FF240 HELIX (4 PIECES) | 1 |
| 3.3 | 4159695 | > COUPLING PROTECTOR FF HELIX KIT | 1 |
| 4 | 4159711 | COUPLING D.16XD.38 FF265 HELIX KIT | 1 |
| 5 | 4159707 | SCREW M8X30 (4 PIECES) | 1 |
| 6 | 4177832 | STUD BOLT M12X527KIT | 1 |
| 6.1 | | > TIE BOLT M12-527x18x30-1.4057 | 1 |
| 6.2 | 2094647 | > NUT M12 M12 ISO4032 VP. | 1 |
| 6.3 | 2123557 | > WASHER CS-12.4-24-1.6-NFE25 (4 PIECES) | 1 |
| 7 | 4159685 | END SHIELD HELIX EPDM KIT | 1 |
| 7.1 | | > END SHIELD M+6" GJL250 MACHINING+CATA | 1 |
| 7.2 | 2127607 | > STATIONARY RING HOLDER 6" HELIX 1.4301 V | 1 |
| 7.3 | 4176513 | > O-RING FOR PUMP JACKET VP. | 1 |
| 7.4 | 2127603 | > O-RING ID.37,6x2,4 EPDM VP. | 1 |
| 7.5 | 2127602 | > O-RING ID.21,35x2 EPDM VP. | 1 |
| 8 | 4159686 | FILING/PURGING PLUG HELIX EPDM KIT | 1 |
| 9 | 4159696 | CARTRIDGE HELIX6-10-16 O/E KIT | 1 |
| 10 | 4177833 | HOUSING PIPES D.152X397 1.4301 KIT | 1 |
| 7.3 | 4176513 | > O-RING FOR PUMP JACKET VP. | 1 |
| 10.1 | | > HOUSING-PIPE Ø152-M+1009-304 | 1 |
| 11 | 4172791 | CENTERING STAGE-RETURN HELIX10 1.4301VP. | 1 |
| 12 | 4171332 | SHAFT EQUIPMENT HELIX V10 BI BLOC KIT | 1 |
| 4.11 | 4102901 | > SCREW CHC-M6X14-8.8-ISO4762-GEOMET500A | 1 |
| 4.12 | 2130995 | > SERRATED LOCK WASHER D.6,2XD.14,5X28 VP. | 1 |
| 12.1 | | > NUT-H-M10-A4.70 | 1 |
| 12.2 | | > SERRATED LOCK WASHER M+10M3-316L | 1 |
| 12.3 | | > STOP COLLAR OF IMPELLER L16,5-Ø16-316L | 1 |
| 12.4 | | > STOP-RUSH-1/2-D16xd2-M+316 | 1 |
| 13 | | HYDRAULIC HELIX V 1009 1.4307 | 1 |
| 14 | 4177837 | SHAFTS D.16X517,5 1.4301 VP. | 1 |

| Item | Article no. | Description | Quantity |
|---|---|---|---|
| 15 | 4159682 | PUMP HOUSING HELIX DN50 PN16 1.4301 KIT | 1 |
| 7.3 | 4176513 | > O-RING FOR PUMP JACKET VP. | 1 |
| 15.1 | | > BLASTING PPE HOUSING V-PN16-DN50-304 | 1 |
| 15.2 | 4217893 | > COUNTER FLANGE-G1"1/2-PN16-GJL KIT | 1 |
| 15.3 | 4171321 | > PRIMING/DRAIN PLUG EPDM HELIX KIT | 1 |
| 16 | 4176517 | BASEPLATE V8/10 VP. | 1 |

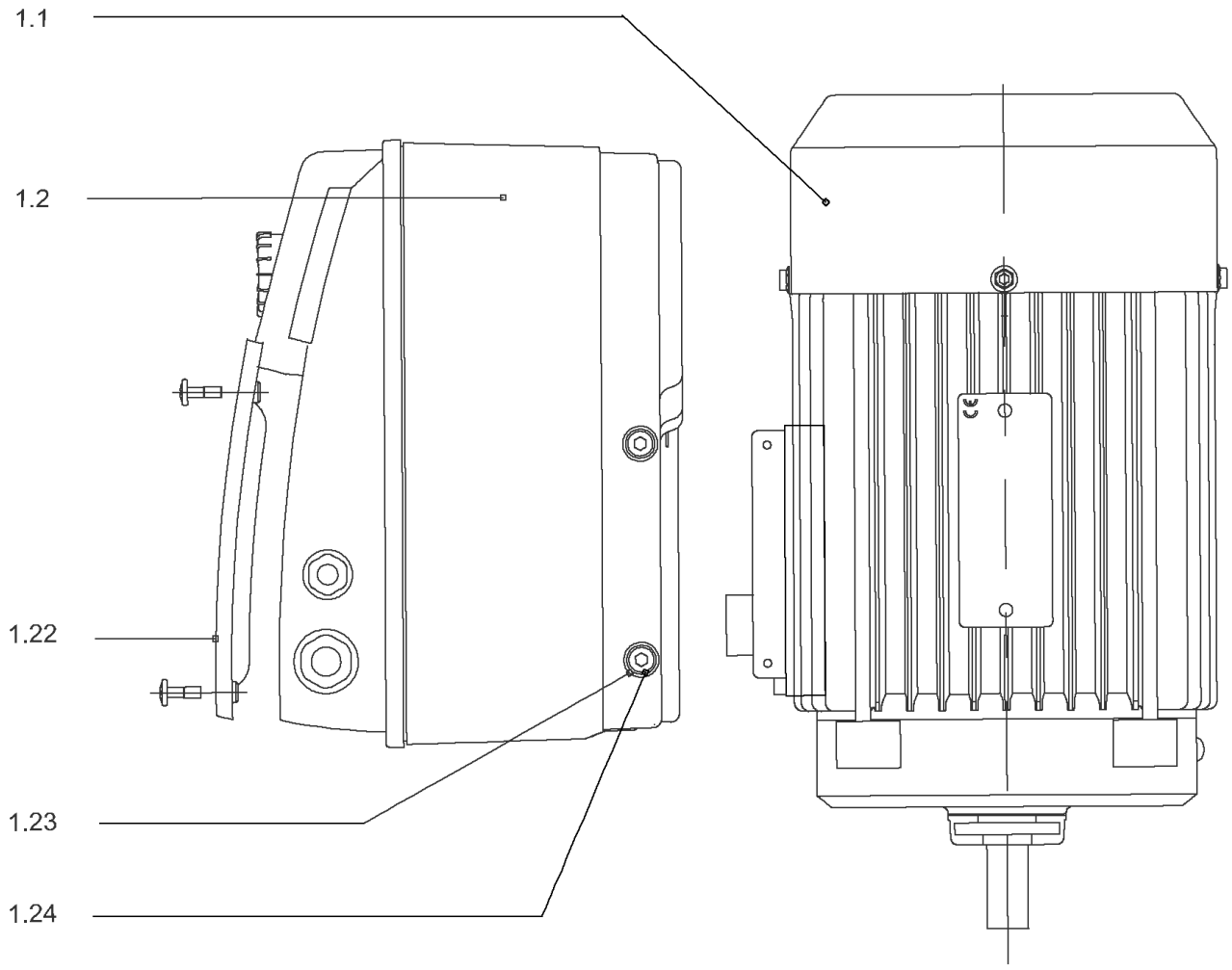
1.1
1.2
1.22
1.23
1.24

## DRIVE HELIX-VE1009-FF24-IE2-ATB KIT

| Item | Article no. | Description | Quantity |
|---|---|---|---|
| 1.1 | | MOTOR 5,5/2/132 FF240 3~380V 60HZ IE2 VP | 1 |
| Note: no longer available/nicht mehrlieferbar/n'est plus disponible | | | |
| | | SPARE PARTS MOTOR:ON REQUEST | 1 |
| 1.2 | 4186781 | MODULE HELIX-VE1009-IE2-ATB KIT | 1 |
| 1.22 | 2111344 | > MODULE COVER/GASKET TL5 KIT | 1 |
| 1.23 | 4215716 | > SCREW M5X16 DIN912 8.8 A2A (4pieces) VP. | 1 |
| 1.24 | 2057978 | > RONDELLE A5,3 DIN6797 FST ZN (4 PIECES) | 1 |

## COUPLING D.16XD.38 FF265 HELIX KIT (4159711)

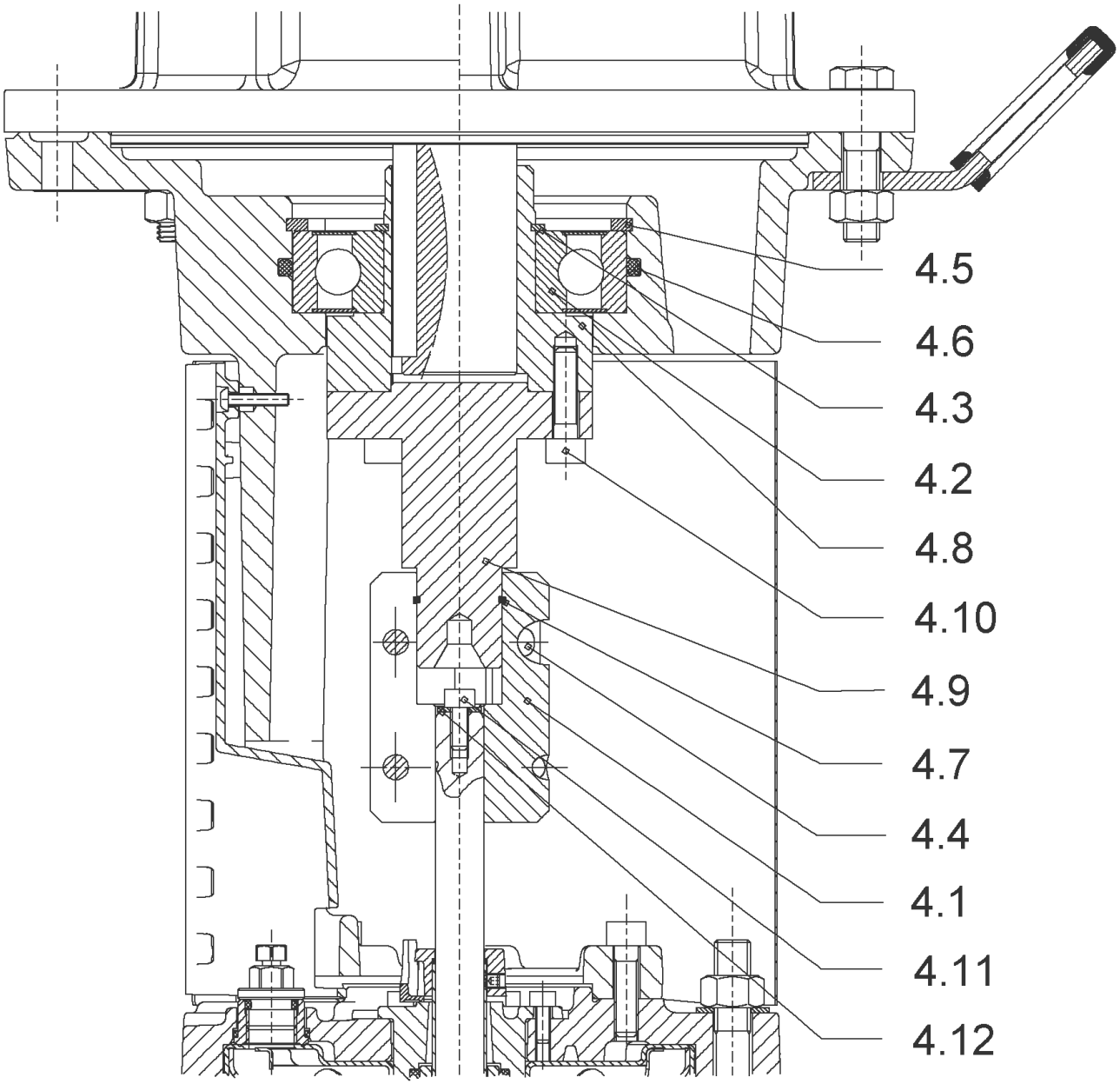

## COUPLING D.16XD.38 FF265 HELIX KIT (4159711)

| Item | Article no. | Description | Quantity |
|---|---|---|---|
| 4.1 | 2131018 | COUPLING 2 PARTS D.16XD.28XL.82,4 VP. | 1 |
| 4.2 | 2131017 | BALL BEARING 6310/ZZ-C4(HT)VP. | 1 |
| 4.3 | 4234253 | CIRCLIP-FOR-SHAFT-D50x2 VP. | 1 |
| 4.4 | 4157726 | SCREW KIT M8X30 (4 PIECES) | 1 |
| 4.5 | 4234255 | CIRCLIPS 110X4 VP. | 1 |
| 4.6 | 4233944 | O-RING ID.110 VP. | 1 |
| 4.7 | 2131019 | RETAINING RING D.26xD.2 DIN7993 VP. | 1 |
| 4.10 | 4157726 | SCREW KIT M8X30 (4 PIECES) | 1 |
| 4.11 | 4102901 | SCREW CHC-M6X14-8.8-ISO4762-GEOMET500A | 1 |
| 4.12 | 2130995 | SERRATED LOCK WASHER D.6,2XD.14,5X28 VP. | 1 |
| | | NOMEL CONTACT WASHER 8x16x1,4 STEEL ZC | 1 |
| 4.8 | 2131020 | HUB D.38XD.50 VP. | 1 |
| 4.9 | 2131021 | SPACER D.28XD.45 VP. | 1 |

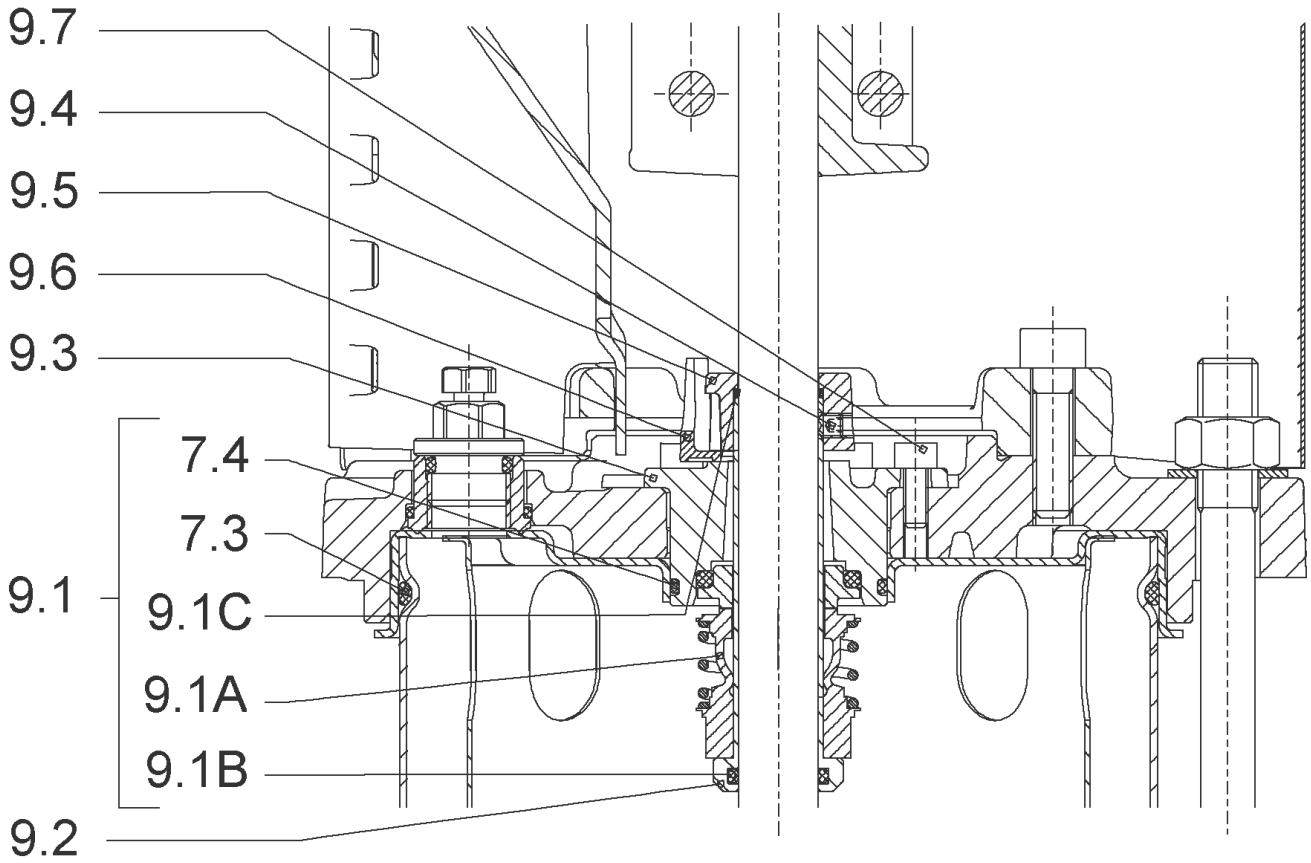
9.7
9.4
9.5
9.6
9.3
7.4
7.3
9.1
9.1C
9.1A
9.1B
9.2

## CARTRIDGE HELIX6-10-16 O/E KIT (4159696)

| Item | Article no. | Description | Quantity |
|---|---|---|---|
| 9.1 | 4159697 | SEAL-KIT-HELIX6-10-16 O/E | 1 |
| 7.3 | 4176513 | > O-RING FOR PUMP JACKET VP. | 1 |
| 7.4 | 2127603 | > O-RING ID.37,6x2,4 EPDM VP. | 1 |
| 9.1A | 2130966 | > MECH.SEAL HELIX2-4-6-10-16 O/E VP. | 1 |
| 9.1B | 2130967 | > O-RING D.16X2,5 EPDM VP. | 1 |
| 9.1C | 4176519 | > O-RING Ø16xØ1.25 VP. | 1 |
| 9.2 | 2130961 | SHAFT SLEEVE D.18/16X72,2 1.4404 VP. | 1 |
| 9.3 | 2130962 | RING HOLDER D.18 G606/G6 1.4301 VP. | 1 |
| 9.4 | 4176520 | SCREW CH M5x5 A4-70 ( 3PIECES ) | 1 |
| 9.5 | 2130963 | DRIVE RING D.29/18x12,4 MACH.VP. | 1 |
| 9.6 | 2130964 | TOOL M.S.CART.HELIX VP. | 1 |
| 9.7 | 2130965 | SCREW CHC M5X12 ISO4762 A2.70(4 PIECES) | 1 |

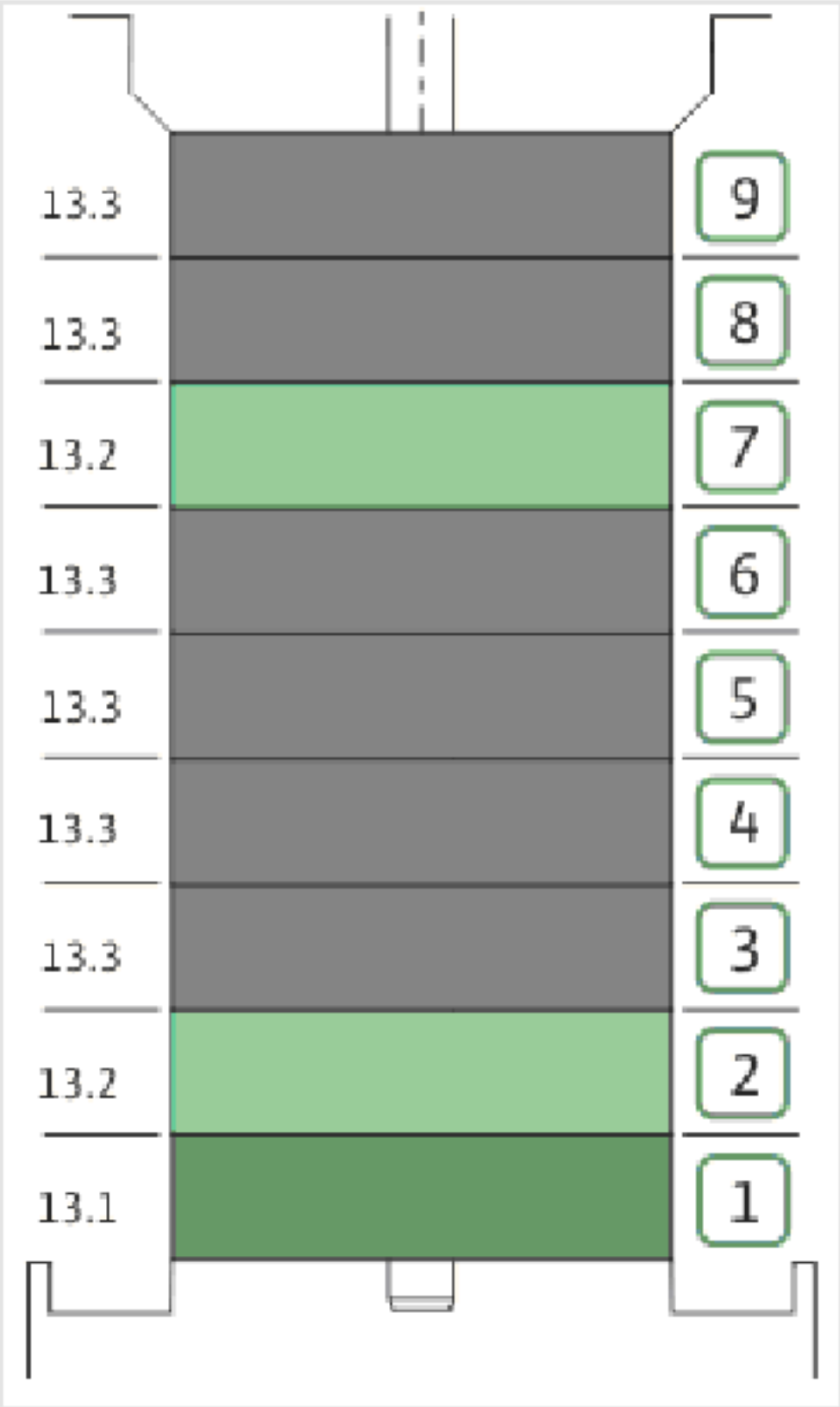
13.3
13.3
13.2
13.3
13.3
13.3
13.3
13.2
13.1
9
8
7
6
5
4
3
2
1

| Item | Article no. | Description | Quantity |
|---|---|---|---|
| 13.1 | 4171331 | STAGE HELIX10 1.4301KIT | 1 |
| | | > MACH.STG-CASING-WOGV-WNR-M+10-304 | 1 |
| | | > IMPELLER-M+10-304 | 1 |
| 13.2 | 4172792 | INTERMEDIATE STAGE HELIX 10 1.4301 KIT | 1 |
| | | > MACH.BEARING-STG-CASING-WNR-M+10-304 | 1 |
| | | > IMPELLER-M+10-304 | 1 |
| | | > SHAFT SLEEVE-SPACER-Ø19,35x18,465-304 | 1 |
| | | > SHAFT-SLEEVE-D16xD20x18-CW | 1 |
| 13.3 | 4172793 | INTERMEDIATE STAGE HELIX 10 1.4301 KIT | 1 |
| | | > MACH.STD-STG-CASING-WGV+NR-M+10-304 | 1 |
| | | > IMPELLER-M+10-304 | 1 |
| | | > IMPELLER SPACER Ø16,05X19,45-L36,465-304 | 1 |

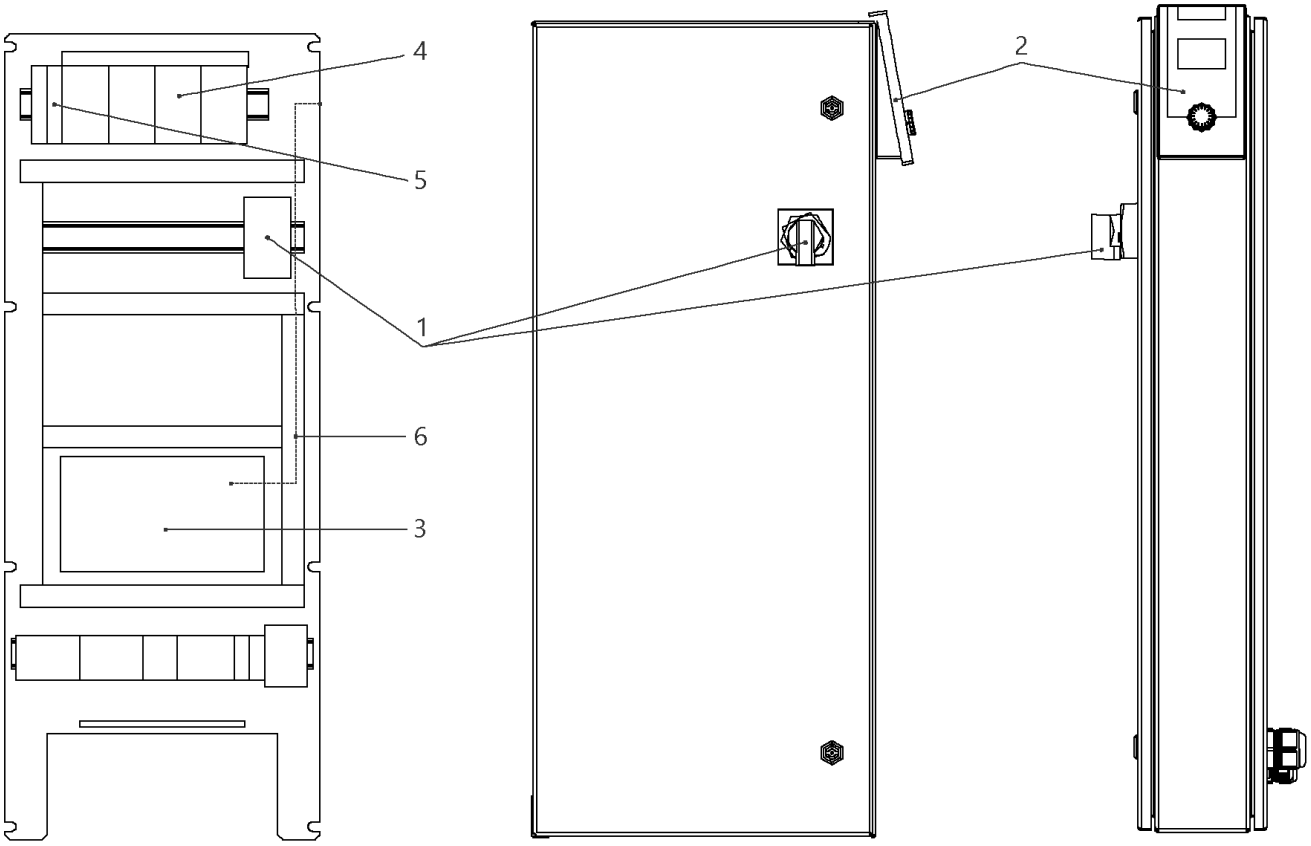
4
5
1
6
3
2

## W-CTRL-SCE-B-3x5,5KW-T4-FM-ND2

| Item | Article no. | Description | Quantity |
|---|---|---|---|
| 1 | 2104473 | MAIN SWITCH OT63F3 L105 KIT | 1 |
| 2 | 4184784 | CONTROL PANEL HMI SC KIT | 1 |
| 2 | 4185259 | ASSEMBLY DISPLAY SC PKG VP. | 1 |
| 3 | 4185257 | ASSEMBLY CPU SCe Booster VP. | 1 |
| 4 | 2051217 | AUTOM.CIRCUIT BREAKER S203 B16 TO7,5kW | 1 |
| 5 | 2046288 | CIRCUIT BREAKER S201 B16 | 1 |
| 6 | 4194956 | PATCH CABLE RJ45 CAT6 1,0M BLUE SC-PANEL | 1 |

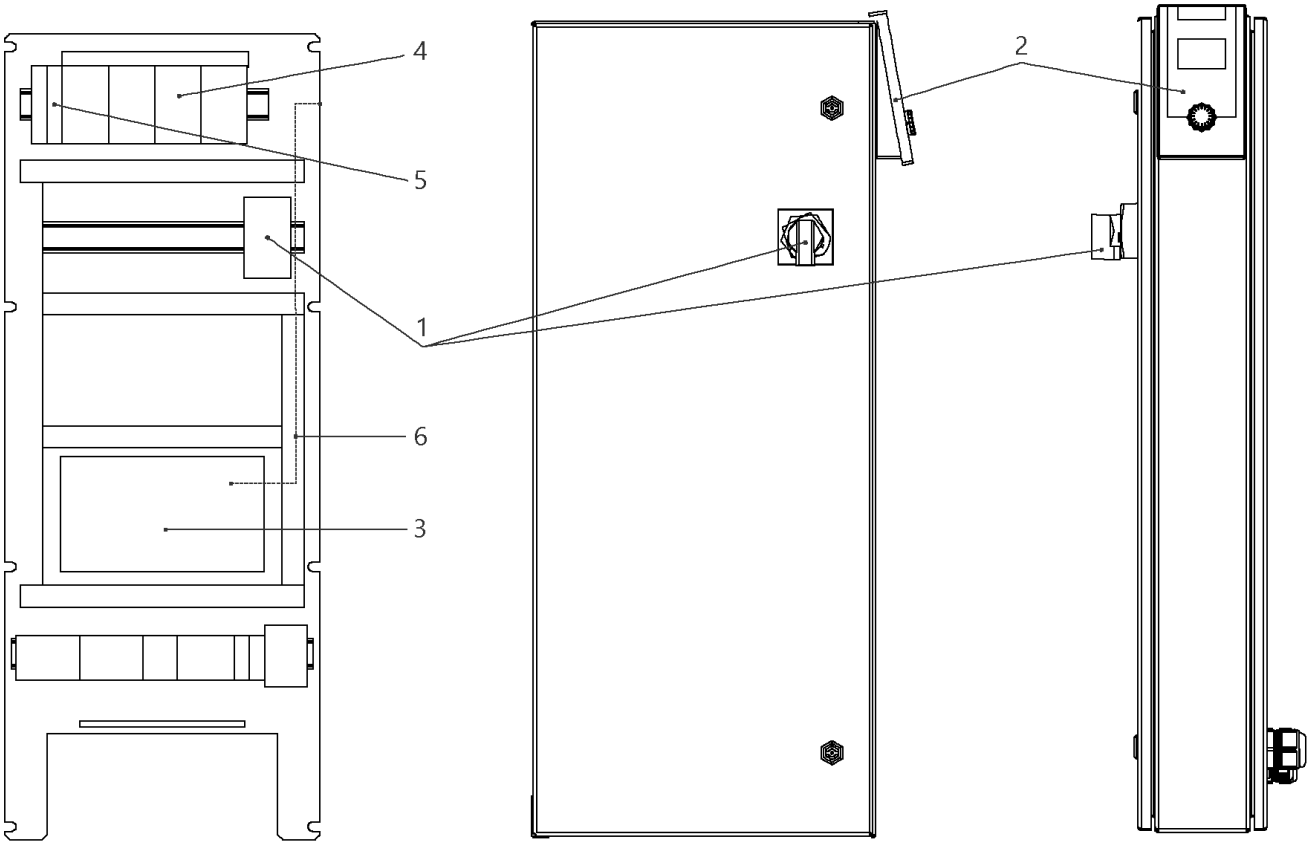
4
5
1
6
3
2

## W-CTRL-SCE-B-3x13A-T34-FM-ND2-AVC-PKG (2541906)

| Item | Article no. | Description | Quantity |
|---|---|---|---|
| 1 | 2104473 | MAIN SWITCH OT63F3 L105 KIT | 1 |
| 2 | 4184784 | CONTROL PANEL HMI SC KIT | 1 |
| 2 | 4185259 | ASSEMBLY DISPLAY SC PKG VP. | 1 |
| Note: DISPLAY ALONE / PLATINE SEULE | | | |
| 3 | 4185257 | ASSEMBLY CPU SCe Booster VP. | 1 |
| 4 | 2051217 | AUTOM.CIRCUIT BREAKER S203 B16 TO7,5kW | 1 |
| 5 | 2046288 | CIRCUIT BREAKER S201 B16 | 1 |
| 6 | 4194956 | PATCH CABLE RJ45 CAT6 1,0M BLUE SC-PANEL | 1 |

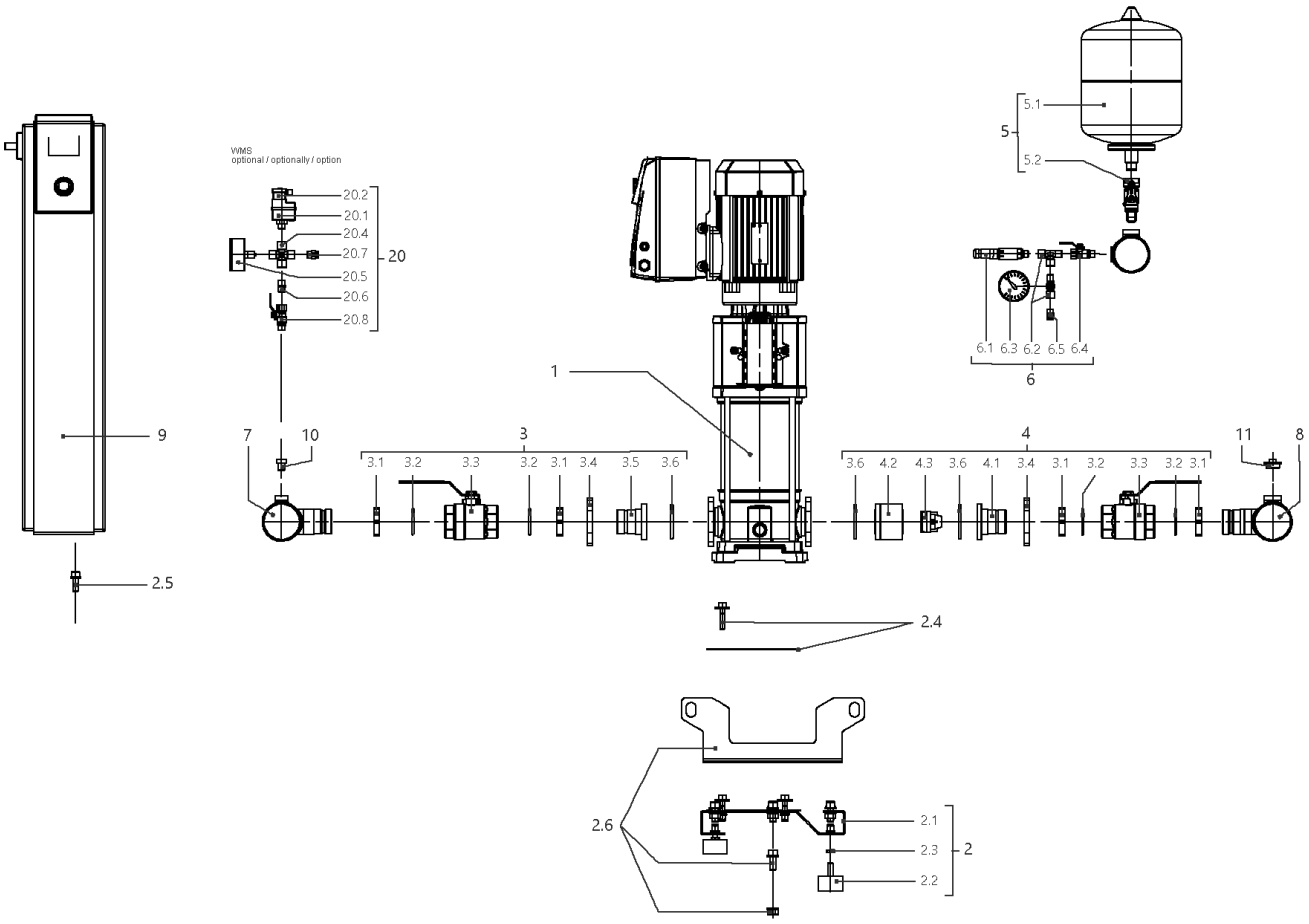
VVMS
optional / optionally / option
20.2
20.1
20.4
20.7
20.5
20.6
20.8
20
5.1
5
5.2
6.1 6.3 6.2 6.5 6.4
6
1
9
7
10
3
3.1 3.2 3.3 3.2 3.1 3.4 3.5 3.6
4
3.6 4.2 4.3 3.6 4.1 3.4 3.1 3.2 3.3 3.2 3.1
11
8
2.5
2.4
2.6
2.1
2.3
2.2
2

## SiBoost Smart 3HELIX VE1003 (2537343)

| Item | Article no. | Description | Quantity |
|---|---|---|---|
| 1 | | HELIX VE1003-1/16/E/S | 1 |
| Note: TO / BIS / JUSQU'AU 31/03/2016 | | | |
| 1 | 4201549 | HELIX VE1003-1/16/E/S | 1 |
| Note: FROM / AB / À PARTIR DU 01/04/2016 | | | |
| 2 | 4200137 | BASE PLATE DE3 1150x300 M10 KIT | 1 |
| Note: TO / BIS / JUSQU'AU 06/02/2014 | | | |
| 2.1 | | > BASEPLATE_3x4/6/10V_E300_1150x300BOX_150 | 1 |
| 2.2 | 2028654 | > VIBRATION DAMPER D.50X30 M10X28 | 1 |
| 2.3 | 2028281 | > NUT M10 DIN936 (ISO4035) 17H VZ | 1 |
| 2.4 | 4199875 | > HOLDER PUMP Siboost Helix V2/4 KIT | 1 |
| 2.5 | 4197084 | > HOLDER SWITCHBOX WILO Smart Control KIT | 1 |
| 2.6 | 4197085 | > LIFTING Siboost HELIX SC KIT | 1 |
| 2 | 4197070 | BASE PLATE DE3 1150x420 M10 KIT | 1 |
| Note: FROM / AB / À PARTIR DU 07/02/2014 | | | |
| 2.1 | | > BASE DE3 HELIX 10 B150 G300 KPL.SMAR | 1 |
| 2.2 | 2028654 | > VIBRATION DAMPER D.50X30 M10X28 | 1 |
| 2.3 | 2028281 | > NUT M10 DIN936 (ISO4035) 17H VZ | 1 |
| 2.4 | 4197083 | > HOLDER PUMP Helix 10/16 KIT | 1 |
| 2.5 | 4197084 | > HOLDER SWITCHBOX WILO Smart Control KIT | 1 |
| 2.6 | 4197085 | > LIFTING Siboost HELIX SC KIT | 1 |
| 3 | 4197072 | SUCTION SIDE Siboost Helix10/16 KIT | 1 |
| 3.1 | 2032623 | > NUT G1 1/2"SW55 MS | 1 |
| 3.2 | 2032616 | > O-RING ID.44X3,53N DIN3771 E7502 | 1 |
| 3.2 | 2534877 | > BALL TAP KDW40-H G11/2I-I-DN40 DVGW | 1 |
| 3.4 | 2032626 | > OVAL FLANGE D52-LK100 ST-VZ | 1 |
| 3.5 | 2032627 | > UNION INSERT DN40 LAPPED FLANGE | 1 |
| 3.6 | 2032628 | > O-RING ID.56,52X5,33N DIN3771 E7502 | 1 |
| 4 | 4197074 | DELIVERY SIDE Siboost Helix V10 KIT | 1 |
| 3.1 | 2032623 | > NUT G1 1/2"SW55 MS | 1 |
| 3.2 | 2032616 | > O-RING ID.44X3,53N DIN3771 E7502 | 1 |
| 3.3 | 2534877 | > BALL TAP KDW40-H G11/2I-I-DN40 DVGW | 1 |
| 3.4 | 2032626 | > OVAL FLANGE D52-LK100 ST-VZ | 1 |
| 4.1 | 2054316 | > UNION INSERT DN40 LAPPED FLANGE(W.SLOT) | 1 |
| 4.2 | 2054317 | > HOUSING F.NON RETURN VALVE(RV-IN) DN40 | 1 |

| Item | Article no. | Description | Quantity |
|---|---|---|---|
| 4.3 | 2032631 | > NON-RETURN-DEVICE DN40 (MTR)TYP RV-IN | 1 |
| 3.6 | 2032628 | > O-RING ID.56,52X5,33N DIN3771 E7502 | 1 |
| 5 | 2032642 | DIAPHREM TANK 8L/PN16 DIN4807/T5 KIT | 1 |
| 5.1 | 2045914 | > DIAPHREM TANK 8L TYP-DD 16BAR | 1 |
| 5.2 | 2027853 | > FLOW FITTING G3/4 FOR DIAPHRAGM VES. | 1 |
| 6 | 4197076 | PRESSURE SENSOR/ GAUGE 0-16BAR KIT | 1 |
| 6.1 | 2085909 | > PRESS.SENSOR 1/4" 0-16BAR 4-20MA VP. | 1 |
| 6.2 | 4197077 | > T-PIECE 1/4" VP. | 1 |
| 6.3 | 2028692 | > PRESSURE GAUGE NG63-PN16-G1/4 | 1 |
| 6.4 | 2028291 | > BALL TAP R1/4" PN42 GIACOMINI R254DL | 1 |
| 6.5 | 2028691 | > BLOWGUN 1/4" MS 30BAR VP. | 1 |
| 7 | 4197078 | PIPE DE3 R21/2''-3x11/2"+2x1/4x900 VP. | 1 |
| 8 | 4197080 | PIPE DE3 R21/2''-3x11/2"+2x1/4+1x3/4x900 | 1 |
| 9 | | W-CTRL-SCE-B-3x0,55-1,5KW-T4-FM-ND1 | 1 |
| Note: TO / BIS / JUSQU'AU 18/05/2014 | | | |
| 9 | 2541914 | W-CTRL-SCE-B-3x10A-T34-FM-ND1-AVC-PKG | 1 |
| Note: FROM / AB / À PARTIR DU 19/05/2014 | | | |
| 10 | 4197079 | PLUG G1/4"x10 AISI304 KIT | 1 |
| 11 | 2032654 | PLUG R3/4" MS VIEGA 1751 | 1 |
| 20 | 2521150 | ASSEMBLY WMS. DE-EB. +VP | 1 |
| 20.1 | 2028652 | > PRESSURE SWITCH PS3-ASR 1/(1,3) VP. | 1 |
| 20.2 | 2130983 | > PLUG PS3-415 WITH KABEL 1,5M 2NO VP. | 1 |
| 20.4 | 2028290 | > CROSSPIECE R1/4" MS-NICKEL | 1 |
| 20.5 | 2028687 | > PRESSURE GAUGE NG63 R1/4" HI.0-6BAR | 1 |
| 20.6 | 2054268 | > DUAL NIPPLE G1/4" x G1/4" MS VP. | 1 |
| 20.7 | 2028691 | > BLOWGUN 1/4" MS 30BAR VP. | 1 |
| 20.8 | 2028291 | > BALL TAP R1/4" PN42 GIACOMINI R254DL | 1 |

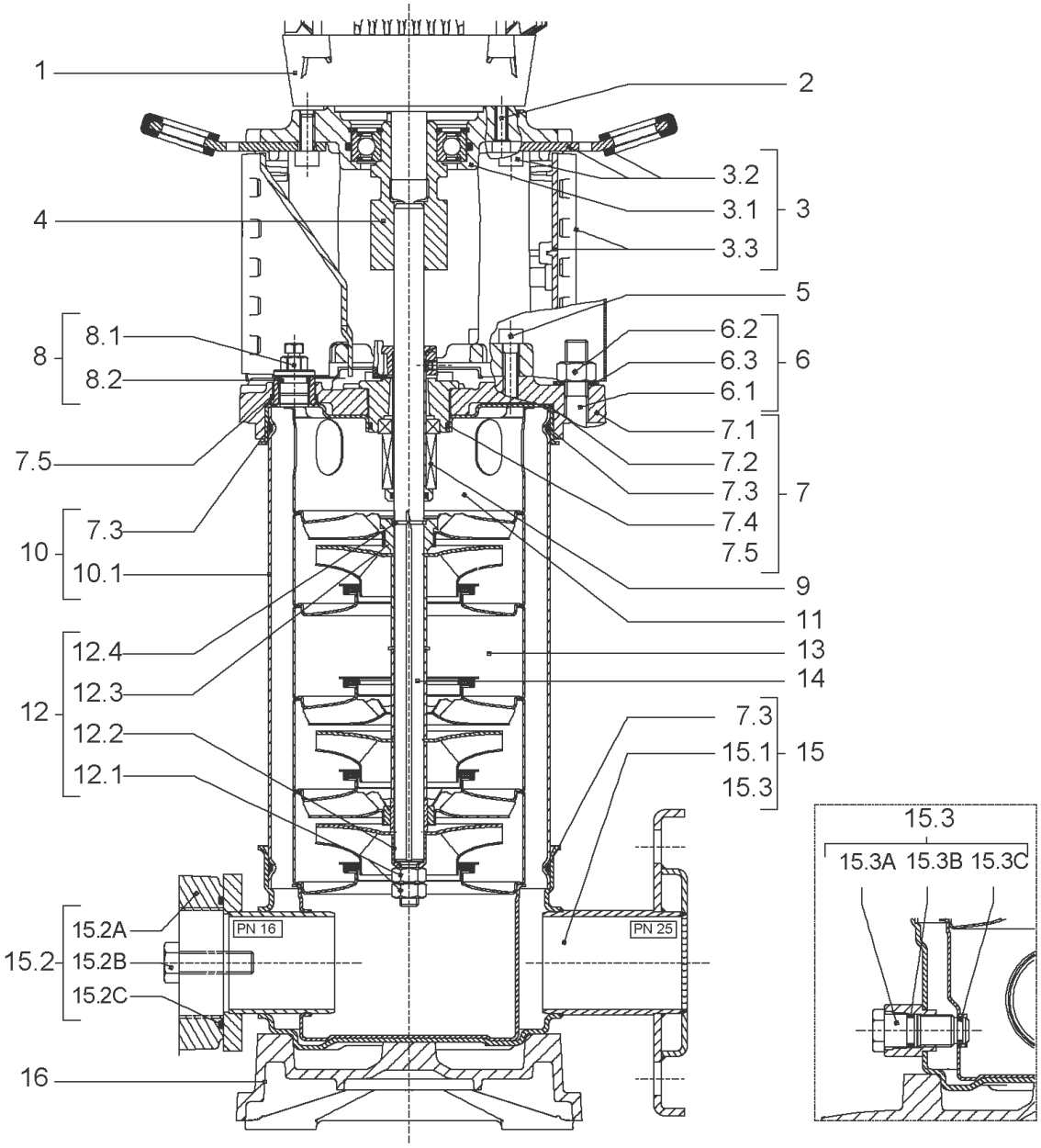
1
2
3.2
3.1
3
3.3
4
5
8.1
8
8.2
6.2
6.3
6
6.1
7.1
7.5
7.2
7.3
7
7.4
7.3
10
7.5
10.1
9
11
12.4
13
12.3
14
12
12.2
7.3
15.1
15
12.1
15.3
15.3
15.3A 15.3B 15.3C
15.2A
PN 16
PN 25
15.2
15.2B
15.2C
16

| Item | Article no. | Description | Quantity |
|---|---|---|---|
| 1 | | DRIVE HELIX-VE1003IE2-WE KIT | 1 |
| Note: MOTOR BRAND WILO ELEC | | | |
| 1 | | DRIVE HELIX-VE1003-IE4-WE-KIT | 1 |
| Note: MOTOR BRAND WILO ELEC | | | |
| 2 | 4159703 | SCREW M8X40 (4 PIECES) | 1 |
| 3 | 4172795 | LANTERNE FT115 HELIX KIT | 1 |
| 3.1 | | > M+5_6_LANTERN_ONE-PIECE_FT115_CATA | 1 |
| 3.2 | 2127604 | > EYELET CPL.FT HELIX(2 PIECES) | 1 |
| 3.3 | 4159692 | > COUPLING PROTECTOR FT HELIX KIT | 1 |
| 4 | 4159709 | COUPLING D.16xD.24 FT115 HELIX KIT | 1 |
| 5 | 4159707 | SCREW M8X30 (4 PIECES) | 1 |
| 6 | 4177812 | STUD BOLT M12X300KIT | 1 |
| 6.1 | | > TIE BOLT M12-300x18x30-1.4057 | 1 |
| 6.2 | 2094647 | > NUT M12 M12 ISO4032 VP. | 1 |
| 6.3 | 2123557 | > WASHER CS-12.4-24-1.6-NFE25 (4 PIECES) | 1 |
| 7 | 4210143 | STATIONARY RING HOLDER HELIX 6" EPDM | 1 |
| 7.2 | 2127607 | > STATIONARY RING HOLDER 6" HELIX 1.4301 V | 1 |
| 7.3 | 4176513 | > O-RING FOR PUMP JACKET VP. | 1 |
| 7.4 | 2127603 | > O-RING ID.37,6x2,4 EPDM VP. | 1 |
| 7.5 | 2127602 | > O-RING ID.21,35x2 EPDM VP. | 1 |
| 8 | 4159686 | FILING/PURGING PLUG HELIX EPDM KIT | 1 |
| 9 | 4171327 | SEAL-KIT-HELIX6-10-16 O/E KIT | 1 |
| 10 | 4177813 | HOUSING PIPE D.152x172 1.4301 KIT | 1 |
| 7.3 | 4176513 | > O-RING FOR PUMP JACKET VP. | 1 |
| 10.1 | | > HOUSING-PIPE Ø152-M+1003-304 | 1 |
| 11 | 4172791 | CENTERING STAGE-RETURN HELIX10 1.4301VP. | 1 |
| 12 | 4209273 | SHAFT EQUIPMENT HELIX V10 KIT | 1 |
| 12.1 | | > NUT-H-M10-A4.70 | 1 |
| 12.2 | | > SERRATED LOCK WASHER M+10M3-316L | 1 |
| 12.3 | | > IMPELLER STOP RING L33,6-304 | 1 |
| 12.4 | | > STOP-RUSH-1/2-D16xd2-M+316 | 1 |
| 13 | | HYDRAULIC HELIX V 1003 1.4307 | 1 |
| 14 | 4177815 | SHAFT D.16X292,5 1.4301 VP. | 1 |
| 15 | 4159682 | PUMP HOUSING HELIX DN50 PN16 1.4301 KIT | 1 |

| Item | Article no. | Description | Quantity |
|---|---|---|---|
| 7.3 | 4176513 | > O-RING FOR PUMP JACKET VP. | 1 |
| 15.1 | | > BLASTING PPE HOUSING V-PN16-DN50-304 | 1 |
| 15.2 | 4217893 | > COUNTER FLANGE-G1"1/2-PN16-GJL KIT | 1 |
| 15.3 | 4171321 | > PRIMING/DRAIN PLUG EPDM HELIX KIT | 1 |
| 16 | 4176517 | BASEPLATE V8/10 VP. | 1 |

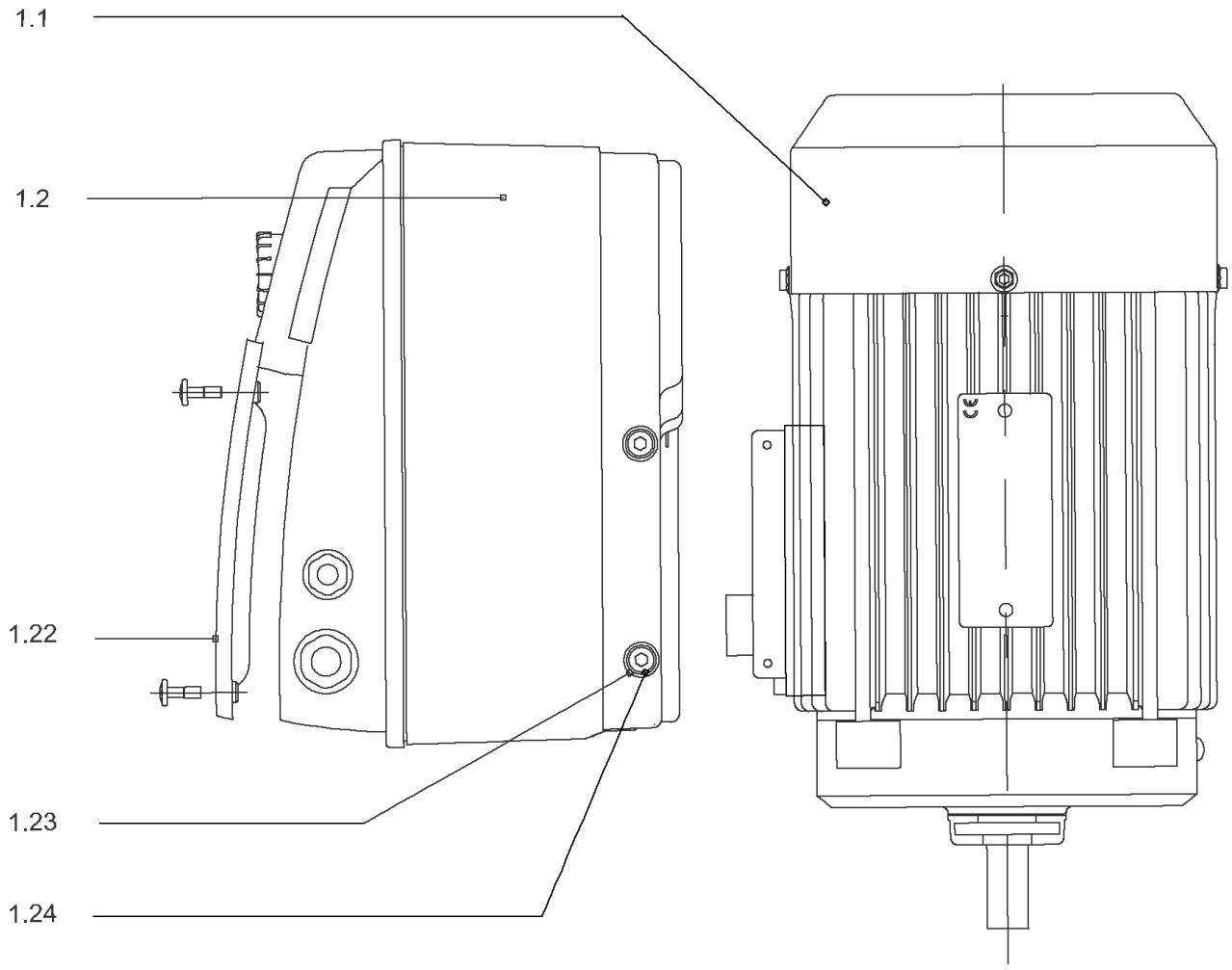
1.1
1.2
1.22
1.23
1.24

## DRIVE HELIX-VE1003IE2-WE KIT

| Item | Article no. | Description | Quantity |
|---|---|---|---|
| 1.1 | | MOTOR 1,5/2/90 3~ 380V 60HZ IE2 WE VP. | 1 |
| Note: no longer available/nicht mehrlieferbar/n'est plus disponible | | | |
| | | SPARE PARTS MOTOR:ON REQUEST | 1 |
| 1.2 | 4186336 | MODULE HELIX-VE1003-IE2-WE KIT | 1 |
| 1.22 | 2054227 | > MODULE COVER/GASKET TL3/4 KIT | 1 |
| 1.23 | 4215716 | > SCREW M5X16 DIN912 8.8 A2A (4pieces) VP. | 1 |
| 1.24 | 2057978 | > RONDELLE A5,3 DIN6797 FST ZN (4 PIECES) | 1 |

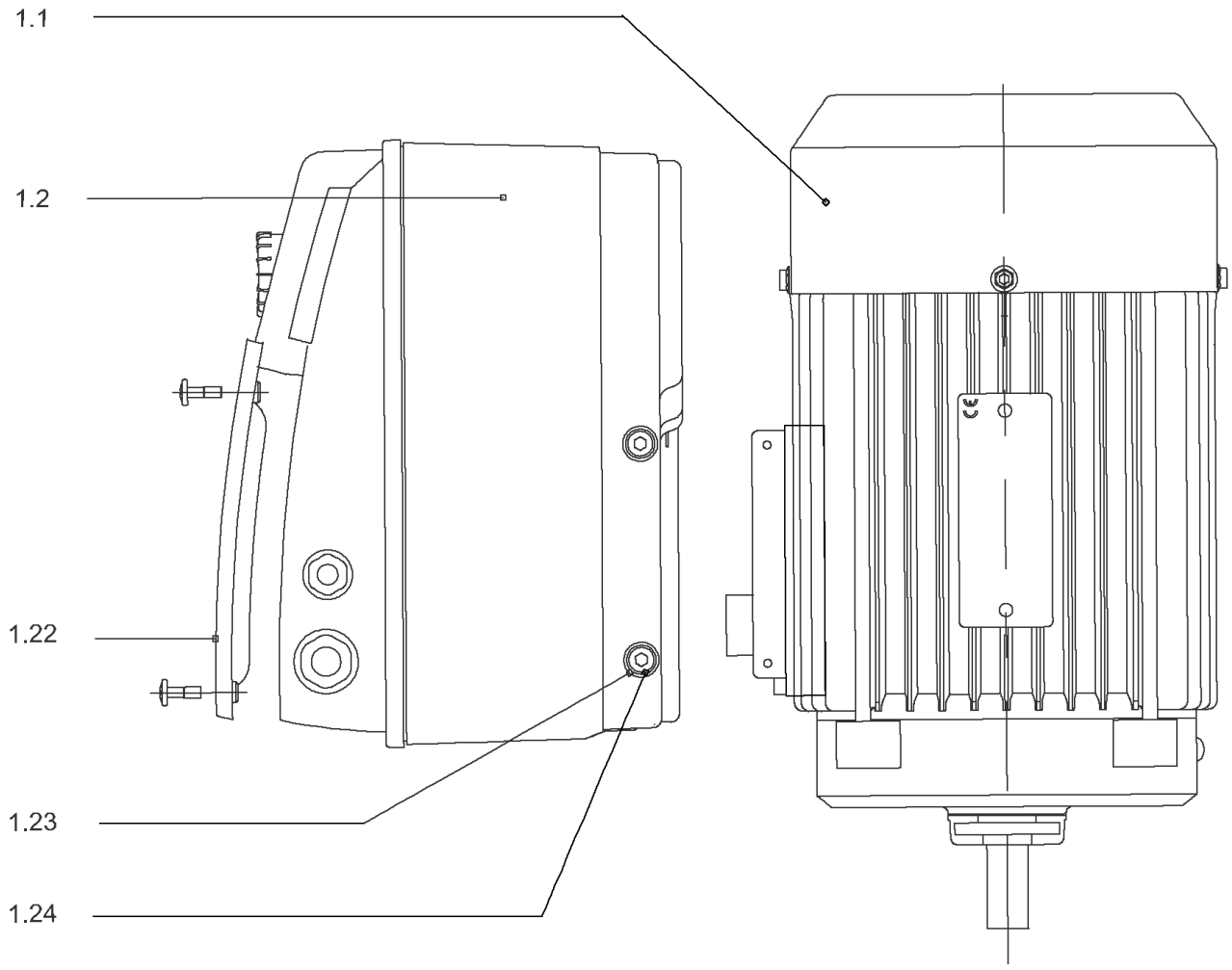
1.1
1.2
1.22
1.23
1.24

## DRIVE HELIX-VE1003-IE4-WE-KIT

| Item | Article no. | Description | Quantity |
|---|---|---|---|
| 1.1 | 4207918 | MOTOR 1.5/2/90 3~ 380V 60HZ IE4 WE VP. | 1 |
| | | SPARE PARTS MOTOR:ON REQUEST | 1 |
| 1.2 | 4209327 | MODULE HELIX-VE1003-IE4-WE KIT | 1 |
| 1.22 | 2054227 | > MODULE COVER/GASKET TL3/4 KIT | 1 |
| 1.23 | 4215716 | > SCREW M5X16 DIN912 8.8 A2A (4pieces) VP. | 1 |
| 1.24 | 2057978 | > RONDELLE A5,3 DIN6797 FST ZN (4 PIECES) | 1 |

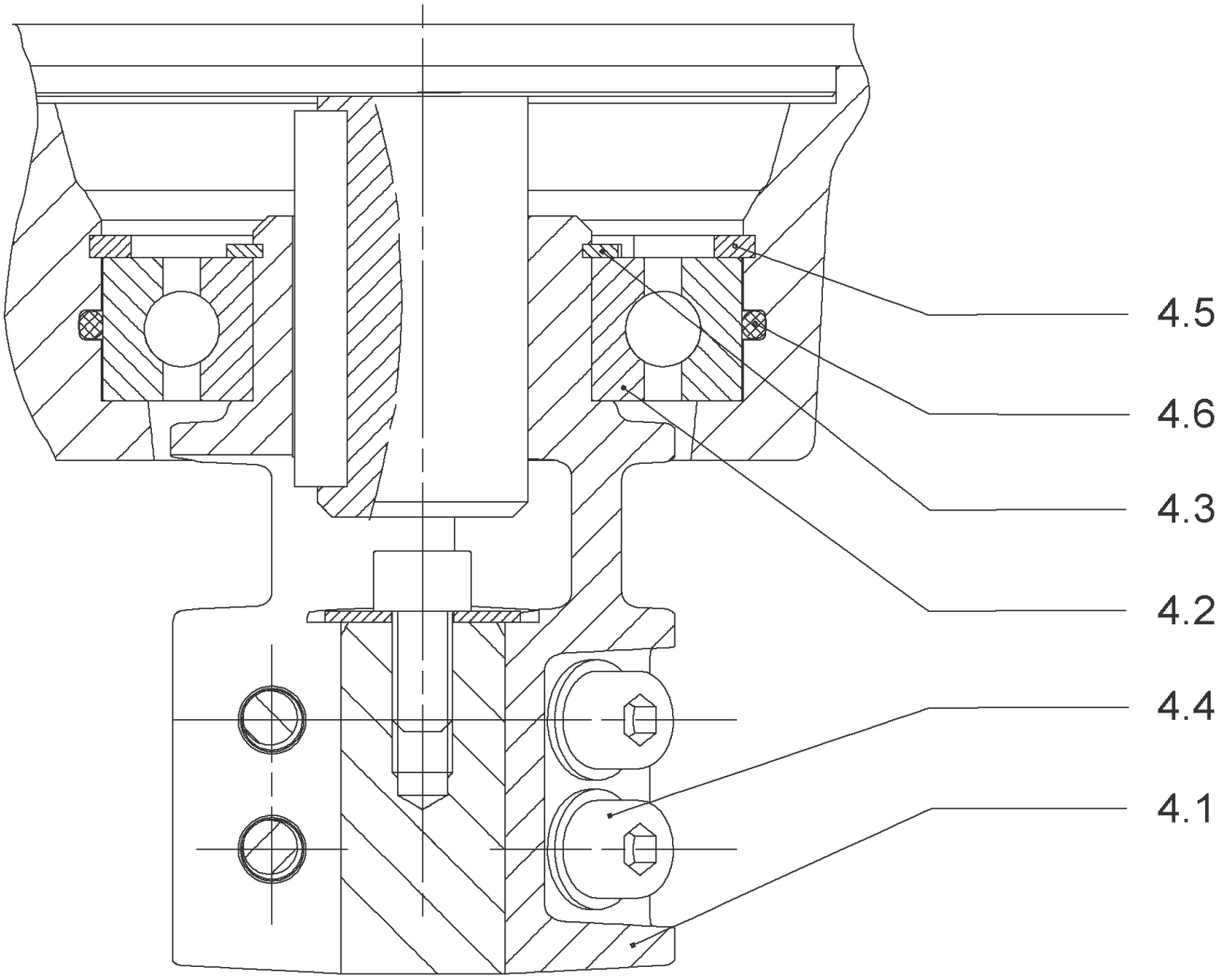
4.5
4.6
4.3
4.2
4.4
4.1

## COUPLING D.16xD.24 FT115 HELIX KIT (4159709)

| Item | Article no. | Description | Quantity |
|---|---|---|---|
| 4.1 | | COUPLING M+ Ø16XØ24 FT115 MACHINED | 1 |
| 4.2 | 2131023 | BALL BEARING 6207/ZZ-C3(HT)VP. | 1 |
| 4.3 | 4234254 | CIRCLIP-FOR-SHAFT-D35x1.5 VP. | 1 |
| 4.4 | 4157726 | SCREW KIT M8X30 (4 PIECES) | 1 |
| 4.5 | 4234251 | CIRCLIP-D72x2.5 VP. | 1 |
| 4.6 | 4234246 | O-RING 72X3 VP. | 1 |
| | | NOMEL CONTACT WASHER 8x16x1,4 STEEL ZC | 1 |

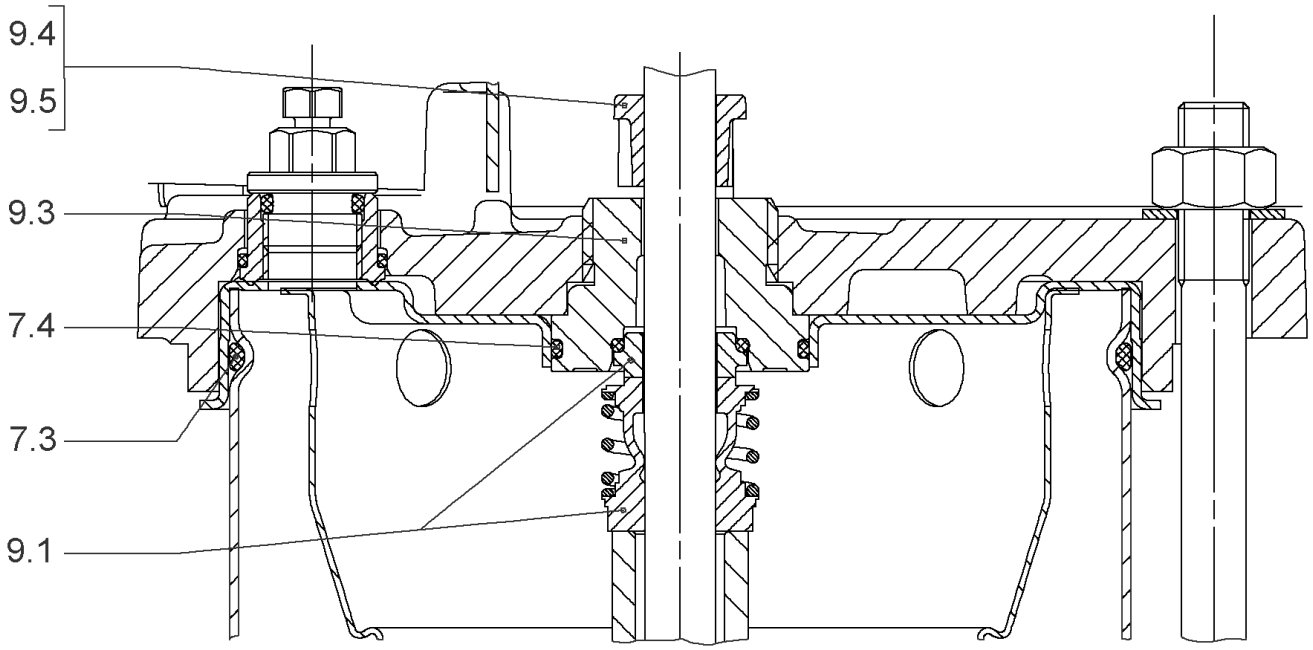
9.4
9.5
9.3
7.4
7.3
9.1

## SEAL-KIT-HELIX6-10-16 O/E KIT (4171327)

| Item | Article no. | Description | Quantity |
|---|---|---|---|
| 7.3 | 4176513 | O-RING FOR PUMP JACKET VP. | 1 |
| 7.4 | 2127603 | O-RING ID.37,6x2,4 EPDM VP. | 1 |
| 9.1 | 4177801 | MECH.SEAL HELIX6-10-16 O/E VP. | 1 |
| 9.3 | 4177798 | MACHINED RING HOLDER M+6" Ø16 304 VP. | 1 |
| 9.5 | 4177799 | MACHINED DRIVE RING Ø16 VP. | 1 |
| 9.4 | 4176520 | SCREW CH M5x5 A4-70 ( 3PIECES ) | 1 |

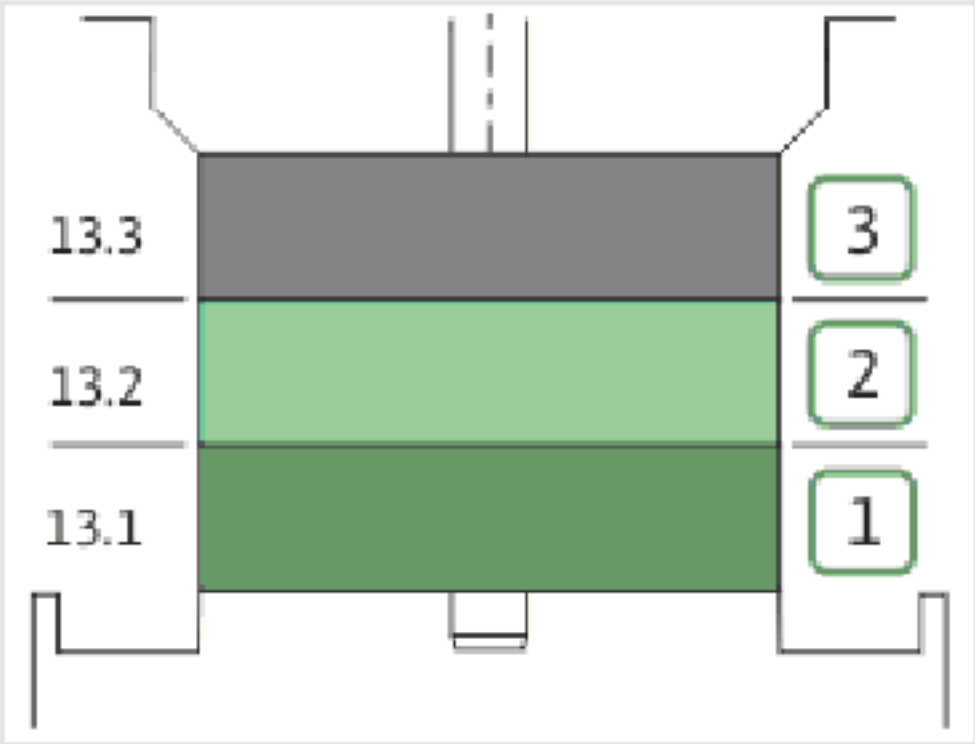
13.3
13.2
13.1
3
2
1

| Item | Article no. | Description | Quantity |
|---|---|---|---|
| 13.1 | 4171331 | STAGE HELIX10 1.4301KIT | 1 |
| | | > MACH.STG-CASING-WOGV-WNR-M+10-304 | 1 |
| | | > IMPELLER-M+10-304 | 1 |
| 13.2 | 4172792 | INTERMEDIATE STAGE HELIX 10 1.4301 KIT | 1 |
| | | > MACH.BEARING-STG-CASING-WNR-M+10-304 | 1 |
| | | > IMPELLER-M+10-304 | 1 |
| | | > SHAFT SLEEVE-SPACER-Ø19,35x18,465-304 | 1 |
| | | > SHAFT-SLEEVE-D16xD20x18-CW | 1 |
| 13.3 | 4172793 | INTERMEDIATE STAGE HELIX 10 1.4301 KIT | 1 |
| | | > MACH.STD-STG-CASING-WGV+NR-M+10-304 | 1 |
| | | > IMPELLER-M+10-304 | 1 |
| | | > IMPELLER SPACER Ø16,05X19,45-L36,465-304 | 1 |

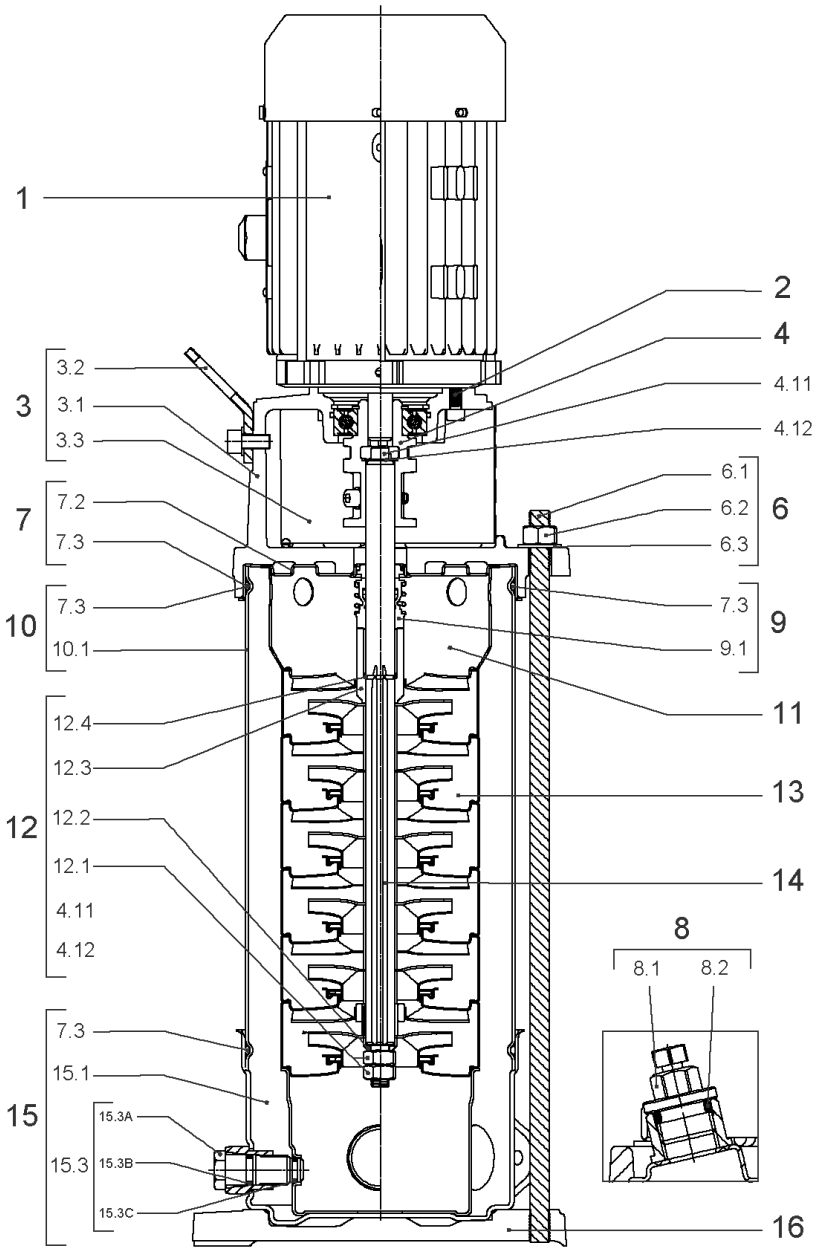
1
2
4
4.11
4.12
3
3.2
3.1
3.3
7
7.2
7.3
10
7.3
10.1
12
12.4
12.3
12.2
12.1
4.11
4.12
15
7.3
15.1
15.3
15.3A
15.3B
15.3C
6
6.1
6.2
6.3
9
7.3
9.1
11
13
14
8
8.1
8.2
16

## HELIX VE1003-1/16/E/S (4201549)

| Item | Article no. | Description | Quantity |
|---|---|---|---|
| 1 | | DRIVE HELIX-VE1003-IE4-WE-KIT | 1 |
| Note: MOTOR BRAND WILO ELEC | | | |
| | | SPARE PARTS MOTOR:ON REQUEST | 1 |
| 2 | 4159707 | SCREW M8X30 (4 PIECES) | 1 |
| 3 | 4213784 | LANTERN FT115 HELIX KIT | 1 |
| 3.1 | | > LANT-MOT-VMI-ReDTC6"-FT115-MACHINED+CATA | 1 |
| 3.2 | 4184852 | > EYELET CPL.FT HELIX (2 PIECES) | 1 |
| 3.3 | 4213782 | > COUPLING PROTECTOR FT115/130 HELIX KIT | 1 |
| 4 | 4159709 | COUPLING D.16xD.24 FT115 HELIX KIT | 1 |
| 6 | 4177812 | STUD BOLT M12X300KIT | 1 |
| 6.1 | | > TIE BOLT M12-300x18x30-1.4057 | 1 |
| 6.2 | 2094647 | > NUT M12 M12 ISO4032 VP. | 1 |
| 6.3 | 2123557 | > WASHER CS-12.4-24-1.6-NFE25 (4 PIECES) | 1 |
| 7 | 4214481 | STATIONARY RING HOLDER HELIX D27 ReDTC | 1 |
| 7.2 | 4214479 | > STATIONARY RING HOLDER HELIX D27 VP. | 1 |
| 7.3 | 4176513 | > O-RING FOR PUMP JACKET VP. | 1 |
| 8 | 4212724 | FILING/PURGING PLUG HELIX ReDTC KIT | 1 |
| 8.1 | | > FILLING PLUG MVI6"-304 | 1 |
| 8.2 | 4177800 | > O-RING EPDM PLUG HELIX VP. | 1 |
| 9 | 4214483 | MECH.SEAL HELIX6-10-16 O/E ReDTC KIT | 1 |
| 9.1 | 4177801 | > MECH.SEAL HELIX6-10-16 O/E VP. | 1 |
| 7.3 | 4176513 | > O-RING FOR PUMP JACKET VP. | 1 |
| 10 | 4177813 | HOUSING PIPE D.152x172 1.4301 KIT | 1 |
| 7.3 | 4176513 | > O-RING FOR PUMP JACKET VP. | 1 |
| 10.1 | | > HOUSING-PIPE Ø152-M+1003-304 | 1 |
| 11 | 4172791 | CENTERING STAGE-RETURN HELIX10 1.4301VP. | 1 |
| 12 | 4214517 | SHAFT EQUIPMENT HELIX V10 ReDTC KIT | 1 |
| 12.1 | | > NUT-H-M10-A4.70 | 1 |
| 12.2 | | > SERRATED LOCK WASHER M+10M3-316L | 1 |
| 12.3 | | > 1/2-SNAP-RING-6/10M3-316L | 1 |
| 12.4 | | > STOP-RUSH-1/2-D16xd2-M+316 | 1 |
| 4.11 | | > SCREW CHC-M6X14-8.8-ISO4762-GEOMET500A | 1 |
| 4.12 | | > WASHER D.24 L6U ZINK | 1 |
| 13 | | HYDRAULIC HELIX V 1003 1.4307 | 1 |

| Item | Article no. | Description | Quantity |
|---|---|---|---|
| 14 | 4214493 | SHAFT D.16X241 HELIX 1.4057 VP. | 1 |
| 15 | 4159682 | PUMP HOUSING HELIX DN50 PN16 1.4301 KIT | 1 |
| 7.3 | 4176513 | > O-RING FOR PUMP JACKET VP. | 1 |
| 15.1 | | > BLASTING PPE HOUSING V-PN16-DN50-304 | 1 |
| 15.2 | 4217893 | > COUNTER FLANGE-G1"1/2-PN16-GJL KIT | 1 |
| 15.3 | 4171321 | > PRIMING/DRAIN PLUG EPDM HELIX KIT | 1 |
| 16 | 4176517 | BASEPLATE V8/10 VP. | 1 |

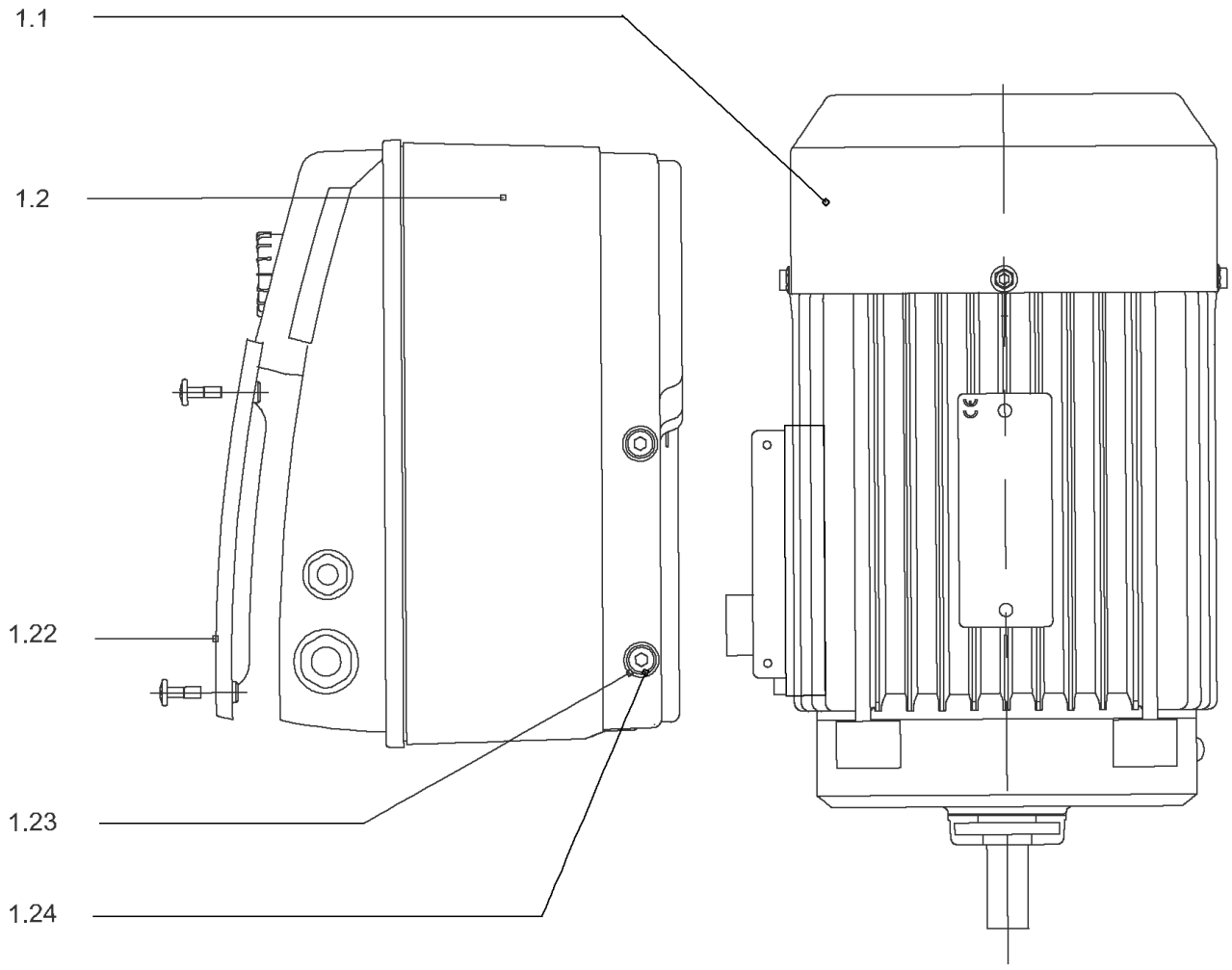
1.1
1.2
1.22
1.23
1.24

## DRIVE HELIX-VE1003-IE4-WE-KIT

| Item | Article no. | Description | Quantity |
|---|---|---|---|
| 1.1 | 4207918 | MOTOR 1.5/2/90 3~ 380V 60HZ IE4 WE VP. | 1 |
| | | SPARE PARTS MOTOR:ON REQUEST | 1 |
| 1.2 | 4209327 | MODULE HELIX-VE1003-IE4-WE KIT | 1 |
| 1.22 | 2054227 | > MODULE COVER/GASKET TL3/4 KIT | 1 |
| 1.23 | 4215716 | > SCREW M5X16 DIN912 8.8 A2A (4pieces) VP. | 1 |
| 1.24 | 2057978 | > RONDELLE A5,3 DIN6797 FST ZN (4 PIECES) | 1 |

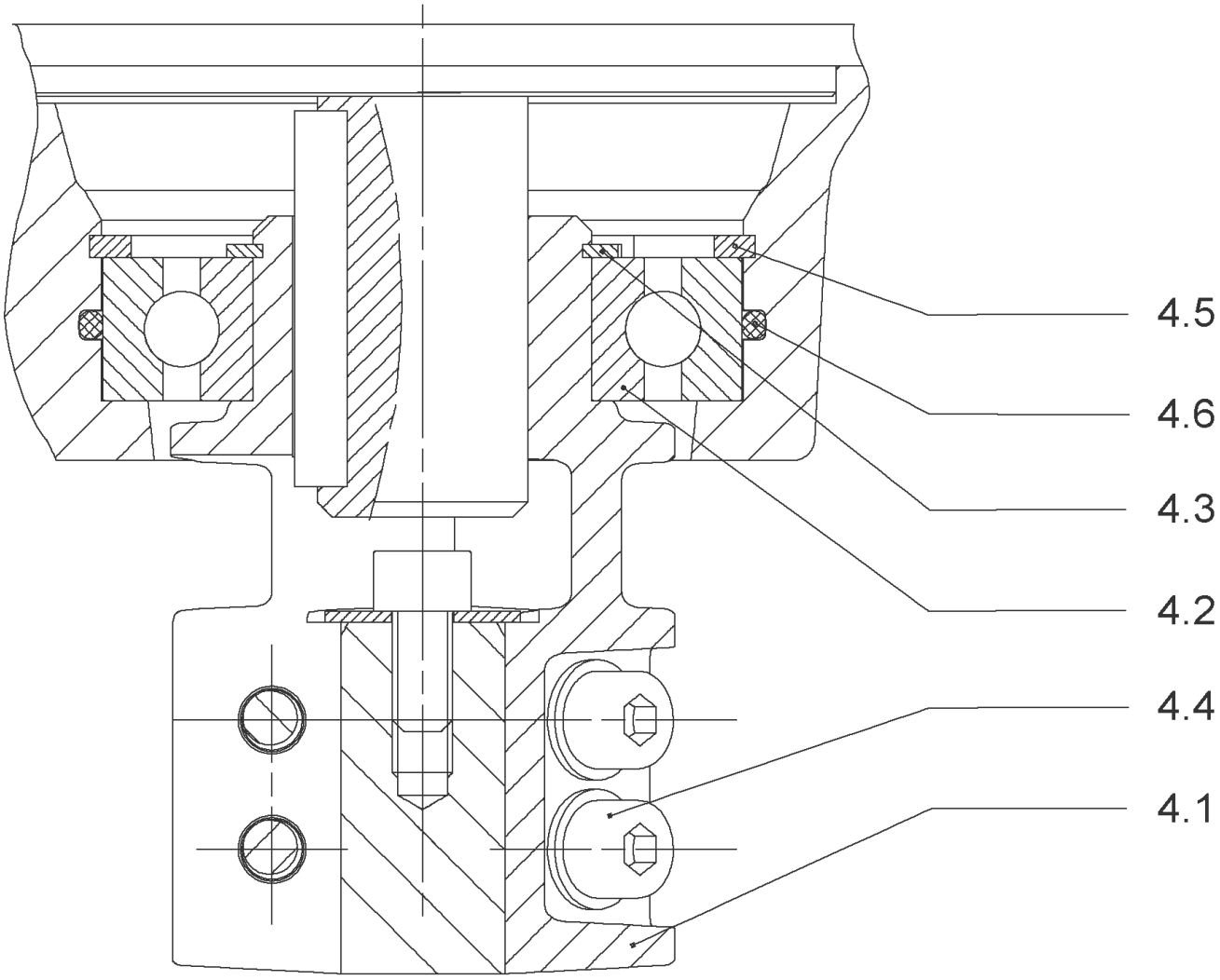
4.5
4.6
4.3
4.2
4.4
4.1

## COUPLING D.16xD.24 FT115 HELIX KIT (4159709)

| Item | Article no. | Description | Quantity |
|---|---|---|---|
| 4.1 | | COUPLING M+ Ø16XØ24 FT115 MACHINED | 1 |
| 4.2 | 2131023 | BALL BEARING 6207/ZZ-C3(HT)VP. | 1 |
| 4.3 | 4234254 | CIRCLIP-FOR-SHAFT-D35x1.5 VP. | 1 |
| 4.4 | 4157726 | SCREW KIT M8X30 (4 PIECES) | 1 |
| 4.5 | 4234251 | CIRCLIP-D72x2.5 VP. | 1 |
| 4.6 | 4234246 | O-RING 72X3 VP. | 1 |
| | | NOMEL CONTACT WASHER 8x16x1,4 STEEL ZC | 1 |

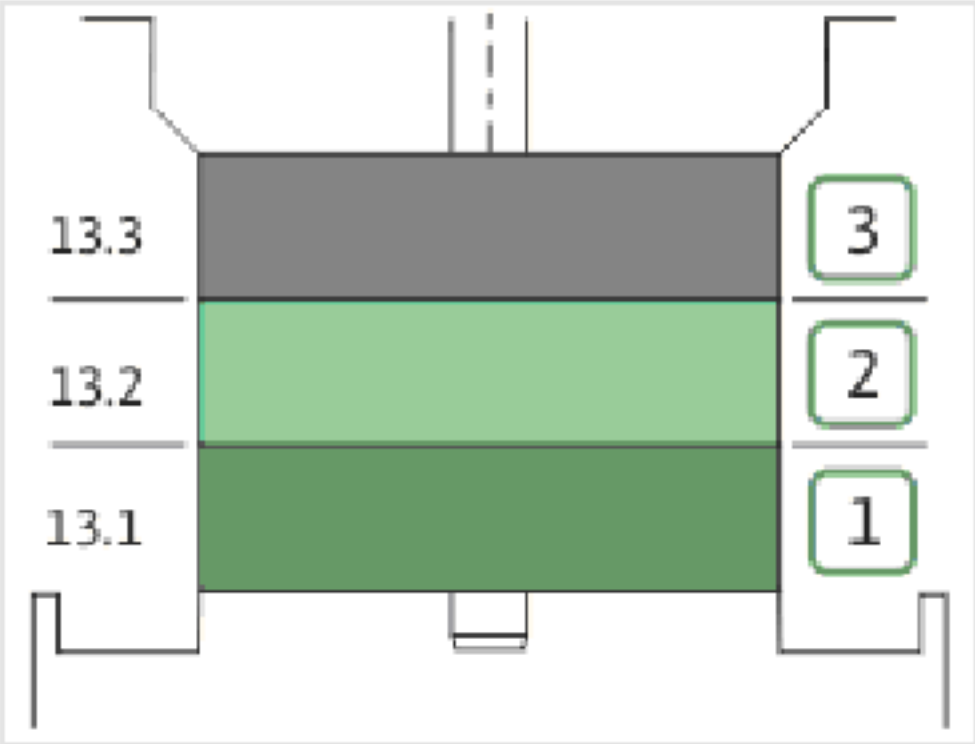
13.3
13.2
13.1
3
2
1

| Item | Article no. | Description | Quantity |
|---|---|---|---|
| 13.1 | 4171331 | STAGE HELIX10 1.4301KIT | 1 |
| | | > MACH.STG-CASING-WOGV-WNR-M+10-304 | 1 |
| | | > IMPELLER-M+10-304 | 1 |
| 13.2 | 4172792 | INTERMEDIATE STAGE HELIX 10 1.4301 KIT | 1 |
| | | > MACH.BEARING-STG-CASING-WNR-M+10-304 | 1 |
| | | > IMPELLER-M+10-304 | 1 |
| | | > SHAFT SLEEVE-SPACER-Ø19,35x18,465-304 | 1 |
| | | > SHAFT-SLEEVE-D16xD20x18-CW | 1 |
| 13.3 | 4172793 | INTERMEDIATE STAGE HELIX 10 1.4301 KIT | 1 |
| | | > MACH.STD-STG-CASING-WGV+NR-M+10-304 | 1 |
| | | > IMPELLER-M+10-304 | 1 |
| | | > IMPELLER SPACER Ø16,05X19,45-L36,465-304 | 1 |

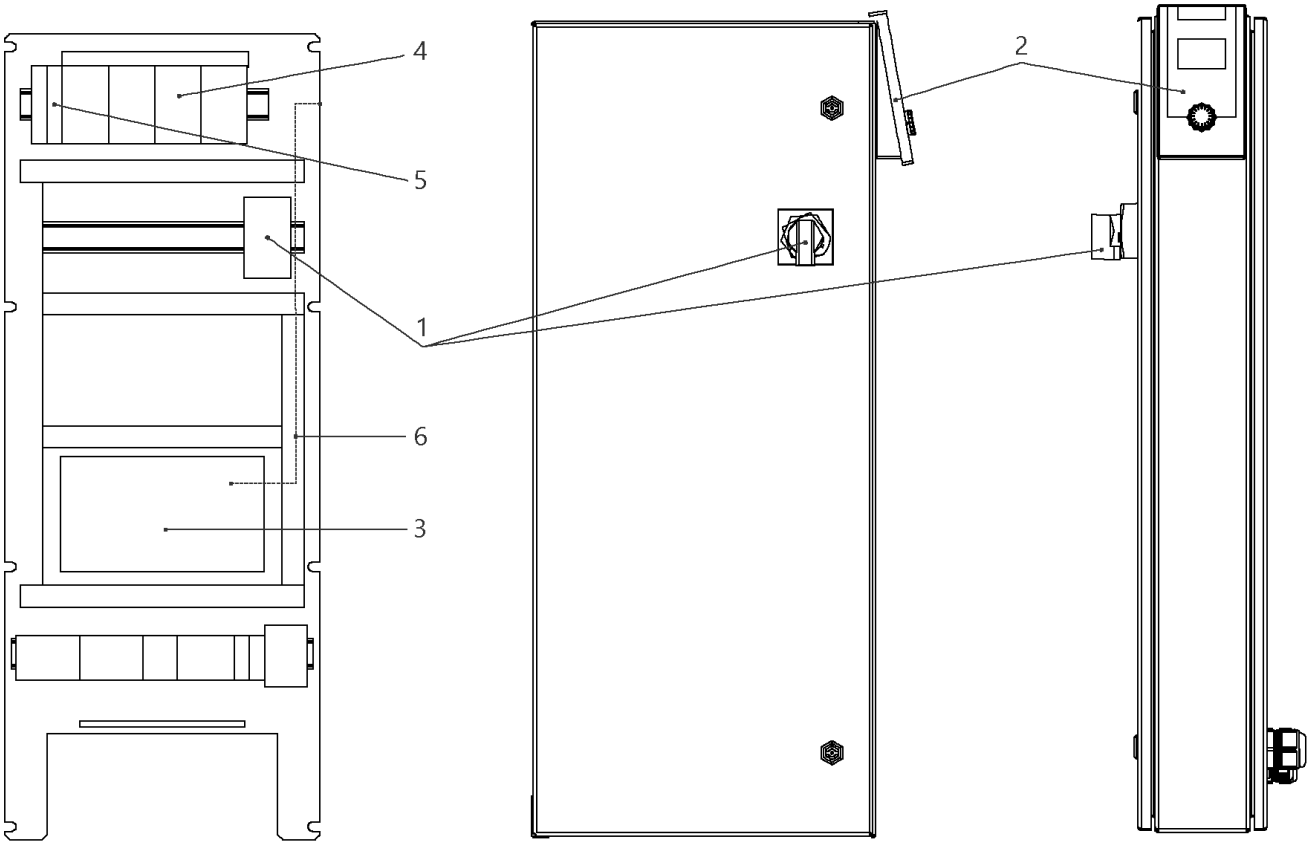
4
5
1
6
3
2

## W-CTRL-SCE-B-3x0,55-1,5KW-T4-FM-ND1

| Item | Article no. | Description | Quantity |
|---|---|---|---|
| 1 | 2104470 | MAIN SWITCH OT40F3 L250 KIT | 1 |
| 2 | 4184784 | CONTROL PANEL HMI SC KIT | 1 |
| 2 | 4185259 | ASSEMBLY DISPLAY SC PKG VP. | 1 |
| 3 | 4185257 | ASSEMBLY CPU SCe Booster VP. | 1 |
| 4 | 2051217 | AUTOM.CIRCUIT BREAKER S203 B16 TO7,5kW | 1 |
| 5 | 2046288 | CIRCUIT BREAKER S201 B16 | 1 |
| 6 | 4197081 | CABLE RJ45 CAT6 0,5M RED SC-PANEL VP. | 1 |

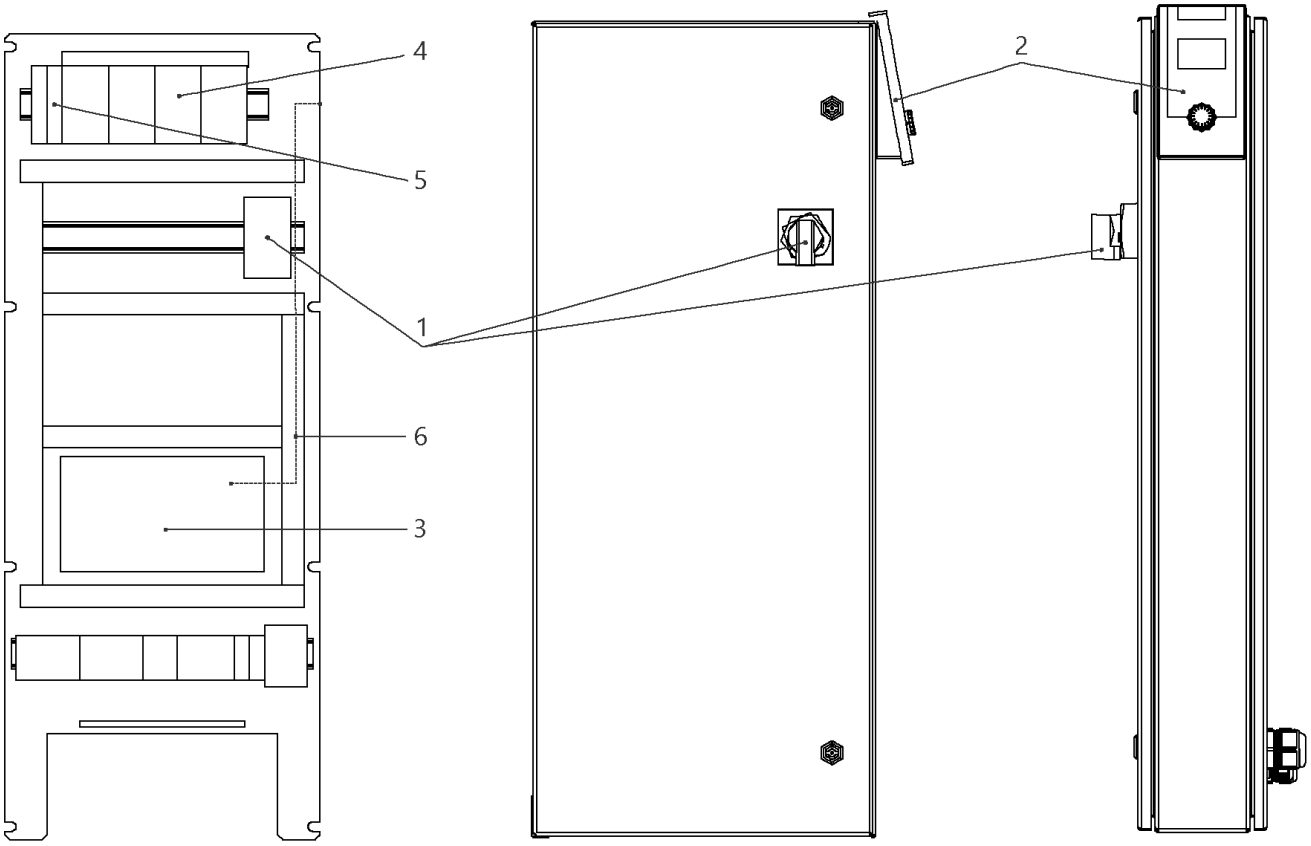
4
5
1
6
3
2

## W-CTRL-SCE-B-3x10A-T34-FM-ND1-AVC-PKG (2541914)

| Item | Article no. | Description | Quantity |
|---|---|---|---|
| 1 | 2104473 | MAIN SWITCH OT63F3 L105 KIT | 1 |
| Note: TO / BIS / JUSQU'AU 30/06/2015 | | | |
| 1 | 2104470 | MAIN SWITCH OT40F3 L250 KIT | 1 |
| Note: FROM / AB / À PARTIR DU 01/07/2015 | | | |
| 2 | 4184784 | CONTROL PANEL HMI SC KIT | 1 |
| 2 | 4185259 | ASSEMBLY DISPLAY SC PKG VP. | 1 |
| Note: DISPLAY ALONE / PLATINE SEULE | | | |
| 3 | 4185257 | ASSEMBLY CPU SCe Booster VP. | 1 |
| 4 | 2119861 | AUTOMATIC CIRCUIT BREAKER S203 B13 3POL. | 1 |
| 5 | 2046288 | CIRCUIT BREAKER S201 B16 | 1 |
| 6 | 4197081 | CABLE RJ45 CAT6 0,5M RED SC-PANEL VP. | 1 |

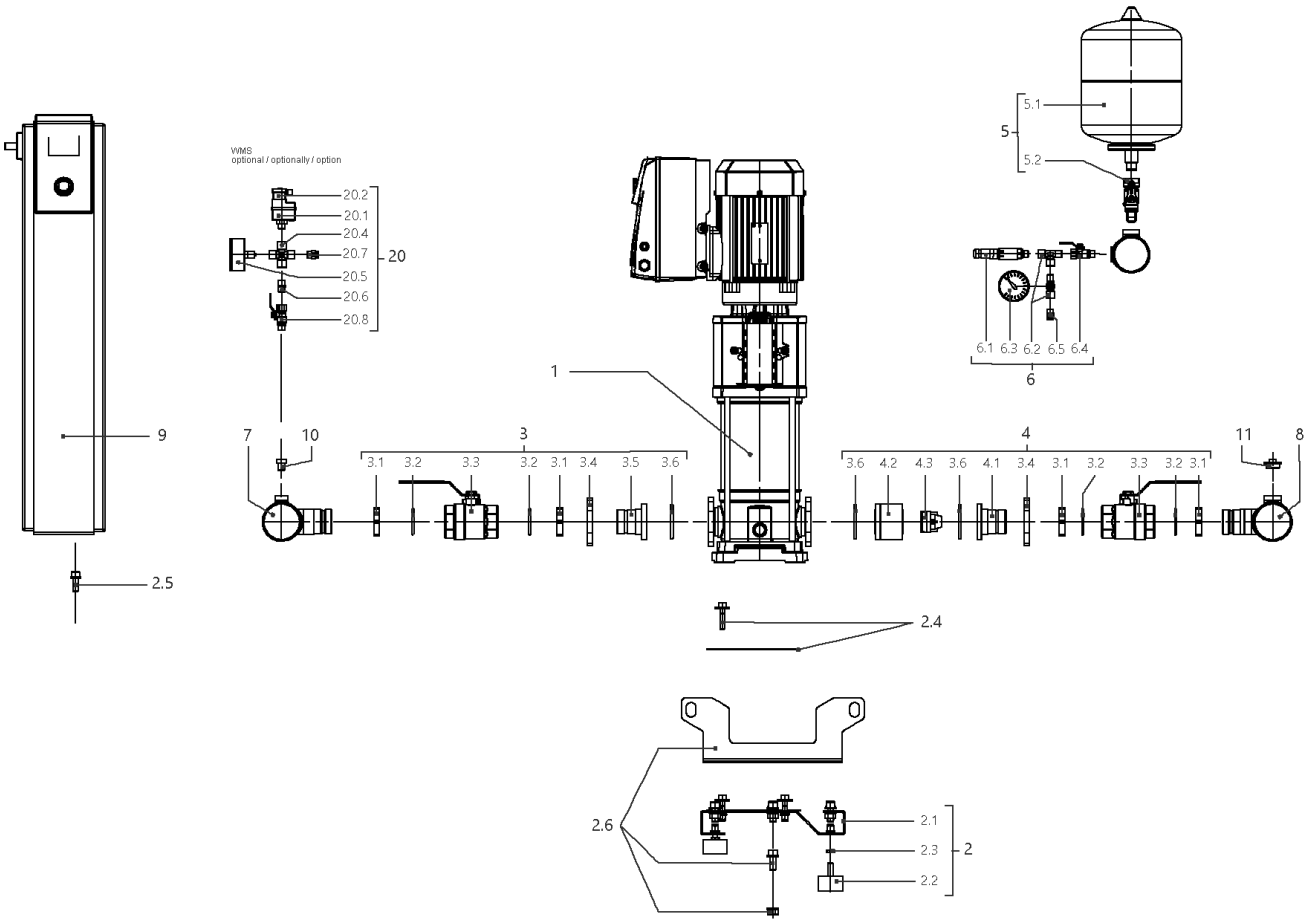
VVMS
optional / optionally / option
20.2
20.1
20.4
20.7
20.5
20.6
20.8
20
5.1
5
5.2
6.1 6.3 6.2 6.5 6.4
6
1
9
7
10
3
3.1 3.2 3.3 3.2 3.1 3.4 3.5 3.6
4
3.6 4.2 4.3 3.6 4.1 3.4 3.1 3.2 3.3 3.2 3.1
11
8
2.5
2.4
2.6
2.1
2.3
2.2
2

## SiBoost Smart 3HELIX VE1005 (2537344)

| Item | Article no. | Description | Quantity |
|---|---|---|---|
| 1 | | HELIX VE1005-1/16/E/S | 1 |
| Note: TO / BIS / JUSQU'AU 30/04/2016 | | | |
| 1 | 4201553 | HELIX VE1005-1/16/E/S | 1 |
| Note: FROM / AB / À PARTIR DU 01/05/2016 | | | |
| 2 | 4197116 | BASE PLATE DE3 1150x420 KIT | 1 |
| 2.1 | | > BASEPLATE_3x4/6/10/16V_E300_BOX_150 | 1 |
| 2.2 | 2028654 | > VIBRATION DAMPER D.50X30 M10X28 | 1 |
| 2.3 | 2028281 | > NUT M10 DIN936 (ISO4035) 17H VZ | 1 |
| 2.4 | 4197083 | > HOLDER PUMP Helix 10/16 KIT | 1 |
| 2.5 | 4197084 | > HOLDER SWITCHBOX WILO Smart Control KIT | 1 |
| 2.6 | 4197117 | > LIFTING Siboost HELIX SC KIT | 1 |
| 3 | 4197072 | SUCTION SIDE Siboost Helix10/16 KIT | 1 |
| 3.1 | 2032623 | > NUT G1 1/2"SW55 MS | 1 |
| 3.2 | 2032616 | > O-RING ID.44X3,53N DIN3771 E7502 | 1 |
| 3.2 | 2534877 | > BALL TAP KDW40-H G11/2I-I-DN40 DVGW | 1 |
| 3.4 | 2032626 | > OVAL FLANGE D52-LK100 ST-VZ | 1 |
| 3.5 | 2032627 | > UNION INSERT DN40 LAPPED FLANGE | 1 |
| 3.6 | 2032628 | > O-RING ID.56,52X5,33N DIN3771 E7502 | 1 |
| 4 | 4197074 | DELIVERY SIDE Siboost Helix V10 KIT | 1 |
| 3.1 | 2032623 | > NUT G1 1/2"SW55 MS | 1 |
| 3.2 | 2032616 | > O-RING ID.44X3,53N DIN3771 E7502 | 1 |
| 3.3 | 2534877 | > BALL TAP KDW40-H G11/2I-I-DN40 DVGW | 1 |
| 3.4 | 2032626 | > OVAL FLANGE D52-LK100 ST-VZ | 1 |
| 4.1 | 2054316 | > UNION INSERT DN40 LAPPED FLANGE(W.SLOT) | 1 |
| 4.2 | 2054317 | > HOUSING F.NON RETURN VALVE(RV-IN) DN40 | 1 |
| 4.3 | 2032631 | > NON-RETURN-DEVICE DN40 (MTR)TYP RV-IN | 1 |
| 3.6 | 2032628 | > O-RING ID.56,52X5,33N DIN3771 E7502 | 1 |
| 5 | 2032642 | DIAPHREM TANK 8L/PN16 DIN4807/T5 KIT | 1 |
| 5.1 | 2045914 | > DIAPHREM TANK 8L TYP-DD 16BAR | 1 |
| 5.2 | 2027853 | > FLOW FITTING G3/4 FOR DIAPHRAGM VES. | 1 |
| 6 | 4197076 | PRESSURE SENSOR/ GAUGE 0-16BAR KIT | 1 |
| 6.1 | 2085909 | > PRESS.SENSOR 1/4" 0-16BAR 4-20MA VP. | 1 |
| 6.2 | 4197077 | > T-PIECE 1/4" VP. | 1 |
| 6.3 | 2028692 | > PRESSURE GAUGE NG63-PN16-G1/4 | 1 |

| Item | Article no. | Description | Quantity |
|---|---|---|---|
| 6.4 | 2028291 | > BALL TAP R1/4" PN42 GIACOMINI R254DL | 1 |
| 6.5 | 2028691 | > BLOWGUN 1/4" MS 30BAR VP. | 1 |
| 7 | 4197078 | PIPE DE3 R21/2''-3x11/2"+2x1/4x900 VP. | 1 |
| 8 | 4197080 | PIPE DE3 R21/2''-3x11/2"+2x1/4+1x3/4x900 | 1 |
| 9 | | W-CTRL-SCE-B-3x4,0KW-T4-FM-ND2 | 1 |
| Note: TO / BIS / JUSQU'AU 18/05/2014 | | | |
| 9 | 2541906 | W-CTRL-SCE-B-3x13A-T34-FM-ND2-AVC-PKG | 1 |
| Note: FROM / AB / À PARTIR DU 19/05/2014 | | | |
| 10 | 4197079 | PLUG G1/4"x10 AISI304 KIT | 1 |
| 11 | 2032654 | PLUG R3/4" MS VIEGA 1751 | 1 |
| 20 | 2521150 | ASSEMBLY WMS. DE-EB. +VP | 1 |
| 20.1 | 2028652 | > PRESSURE SWITCH PS3-ASR 1/(1,3) VP. | 1 |
| 20.2 | 2130983 | > PLUG PS3-415 WITH KABEL 1,5M 2NO VP. | 1 |
| 20.4 | 2028290 | > CROSSPIECE R1/4" MS-NICKEL | 1 |
| 20.5 | 2028687 | > PRESSURE GAUGE NG63 R1/4" HI.0-6BAR | 1 |
| 20.6 | 2054268 | > DUAL NIPPLE G1/4" x G1/4" MS VP. | 1 |
| 20.7 | 2028691 | > BLOWGUN 1/4" MS 30BAR VP. | 1 |
| 20.8 | 2028291 | > BALL TAP R1/4" PN42 GIACOMINI R254DL | 1 |

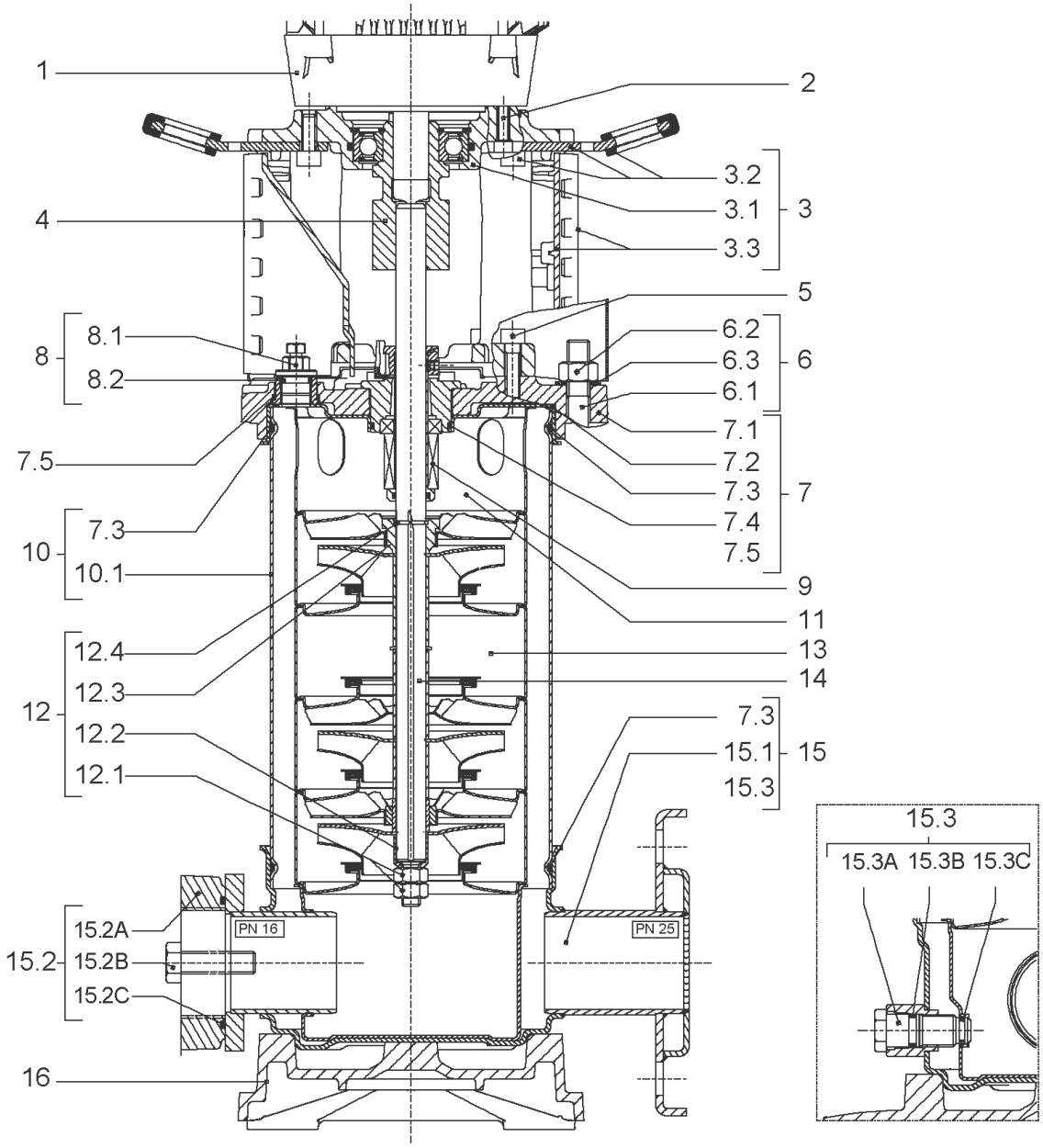
1
2
3.2
3.1
3
3.3
4
5
8.1
8
8.2
6.2
6.3
6
6.1
7.1
7.2
7.5
7.3
7
7.4
7.3
10
7.5
10.1
9
11
12.4
13
12.3
14
12
12.2
7.3
15.1
15
12.1
15.3
15.3
15.3A 15.3B 15.3C
15.2A
PN 16
PN 25
15.2
15.2B
15.2C
16

| Item | Article no. | Description | Quantity |
|---|---|---|---|
| 1 | | DRIVE HELIX-VE1005IE2-WE KIT | 1 |
| Note: MOTOR BRAND WILO ELEC | | | |
| 1 | | DRIVE HELIX-VE1005-IE4-WE-KIT | 1 |
| Note: MOTOR BRAND WILO ELEC | | | |
| 2 | 4206025 | SCREW M8X45 (4 PIECES) | 1 |
| 3 | 4172789 | LANTERN FT130 HELIX V10 KIT | 1 |
| 3.1 | | > M+5_6_LANTERN_ONE-PIECE_FT130_CATA | 1 |
| 3.2 | 2127604 | > EYELET CPL.FT HELIX(2 PIECES) | 1 |
| 3.3 | 4159692 | > COUPLING PROTECTOR FT HELIX KIT | 1 |
| 4 | 4159710 | COUPLING D.16XD.28 FT130 HELIX KIT | 1 |
| 5 | 4159707 | SCREW M8X30 (4 PIECES) | 1 |
| 6 | 2018576 | STUD BOLT M12X377 KIT | 1 |
| 6.1 | | > TIE BOLT M12-377x18x30-1.4057 | 1 |
| 6.2 | 2094647 | > NUT M12 M12 ISO4032 VP. | 1 |
| 6.3 | 2123557 | > WASHER CS-12.4-24-1.6-NFE25 (4 PIECES) | 1 |
| 7 | 4210143 | STATIONARY RING HOLDER HELIX 6" EPDM | 1 |
| 7.2 | 2127607 | > STATIONARY RING HOLDER 6" HELIX 1.4301 V | 1 |
| 7.3 | 4176513 | > O-RING FOR PUMP JACKET VP. | 1 |
| 7.4 | 2127603 | > O-RING ID.37,6x2,4 EPDM VP. | 1 |
| 7.5 | 2127602 | > O-RING ID.21,35x2 EPDM VP. | 1 |
| 8 | 4159686 | FILING/PURGING PLUG HELIX EPDM KIT | 1 |
| 9 | 4171327 | SEAL-KIT-HELIX6-10-16 O/E KIT | 1 |
| 10 | 4176518 | HOUSING PIPES D.152X247 1.4301 KIT | 1 |
| 7.3 | 4176513 | > O-RING FOR PUMP JACKET VP. | 1 |
| 10.1 | | > HOUSING-PIPE Ø152-M+1005-304 | 1 |
| 11 | 4172791 | CENTERING STAGE-RETURN HELIX10 1.4301VP. | 1 |
| 12 | 4209273 | SHAFT EQUIPMENT HELIX V10 KIT | 1 |
| 12.1 | | > NUT-H-M10-A4.70 | 1 |
| 12.2 | | > SERRATED LOCK WASHER M+10M3-316L | 1 |
| 12.3 | | > IMPELLER STOP RING L33,6-304 | 1 |
| 12.4 | | > STOP-RUSH-1/2-D16xd2-M+316 | 1 |
| 13 | | HYDRAULIC HELIX V 1005 1.4307 | 1 |
| 14 | 4176515 | SHAFT D.16 X367,5 1. 4301 VP. | 1 |
| 15 | 4159682 | PUMP HOUSING HELIX DN50 PN16 1.4301 KIT | 1 |

| Item | Article no. | Description | Quantity |
|---|---|---|---|
| 7.3 | 4176513 | > O-RING FOR PUMP JACKET VP. | 1 |
| 15.1 | | > BLASTING PPE HOUSING V-PN16-DN50-304 | 1 |
| 15.2 | 4217893 | > COUNTER FLANGE-G1"1/2-PN16-GJL KIT | 1 |
| 15.3 | 4171321 | > PRIMING/DRAIN PLUG EPDM HELIX KIT | 1 |
| 16 | 4176517 | BASEPLATE V8/10 VP. | 1 |

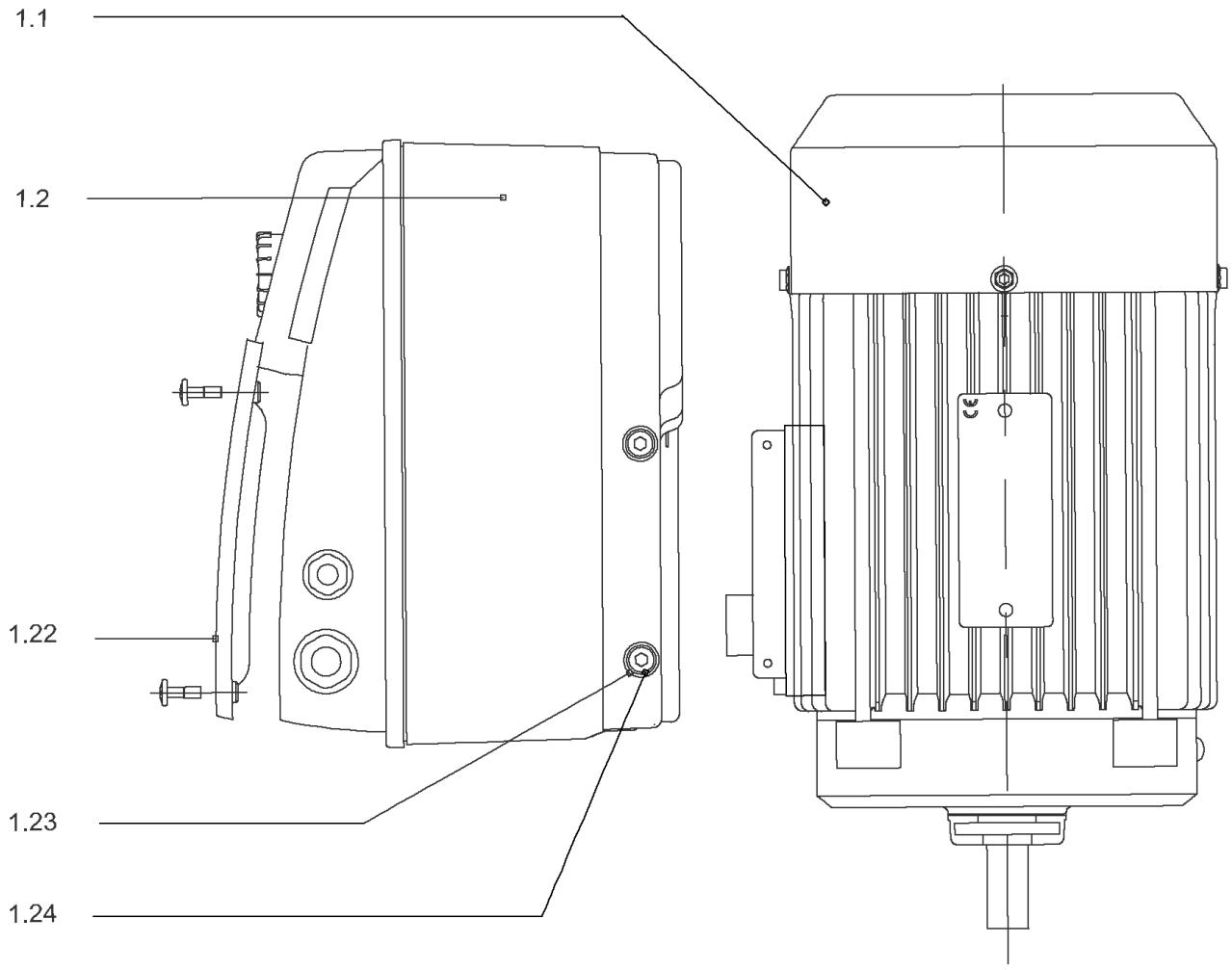
1.1
1.2
1.22
1.23
1.24

## DRIVE HELIX-VE1005IE2-WE KIT

| Item | Article no. | Description | Quantity |
|---|---|---|---|
| 1.1 | | M3-T638P55V18H-100F13-SU-N28-WE-IE2 VP. | 1 |
| Note: no longer available/nicht mehrlieferbar/n'est plus disponible | | | |
| | | SPARE PARTS MOTOR:ON REQUEST | 1 |
| 1.2 | 4190202 | MODULE HELIX-VE1005-IE2-WE KIT | 1 |
| 1.22 | 2054227 | > MODULE COVER/GASKET TL3/4 KIT | 1 |
| 1.23 | 4215716 | > SCREW M5X16 DIN912 8.8 A2A (4pieces) VP. | 1 |
| 1.24 | 2057978 | > RONDELLE A5,3 DIN6797 FST ZN (4 PIECES) | 1 |

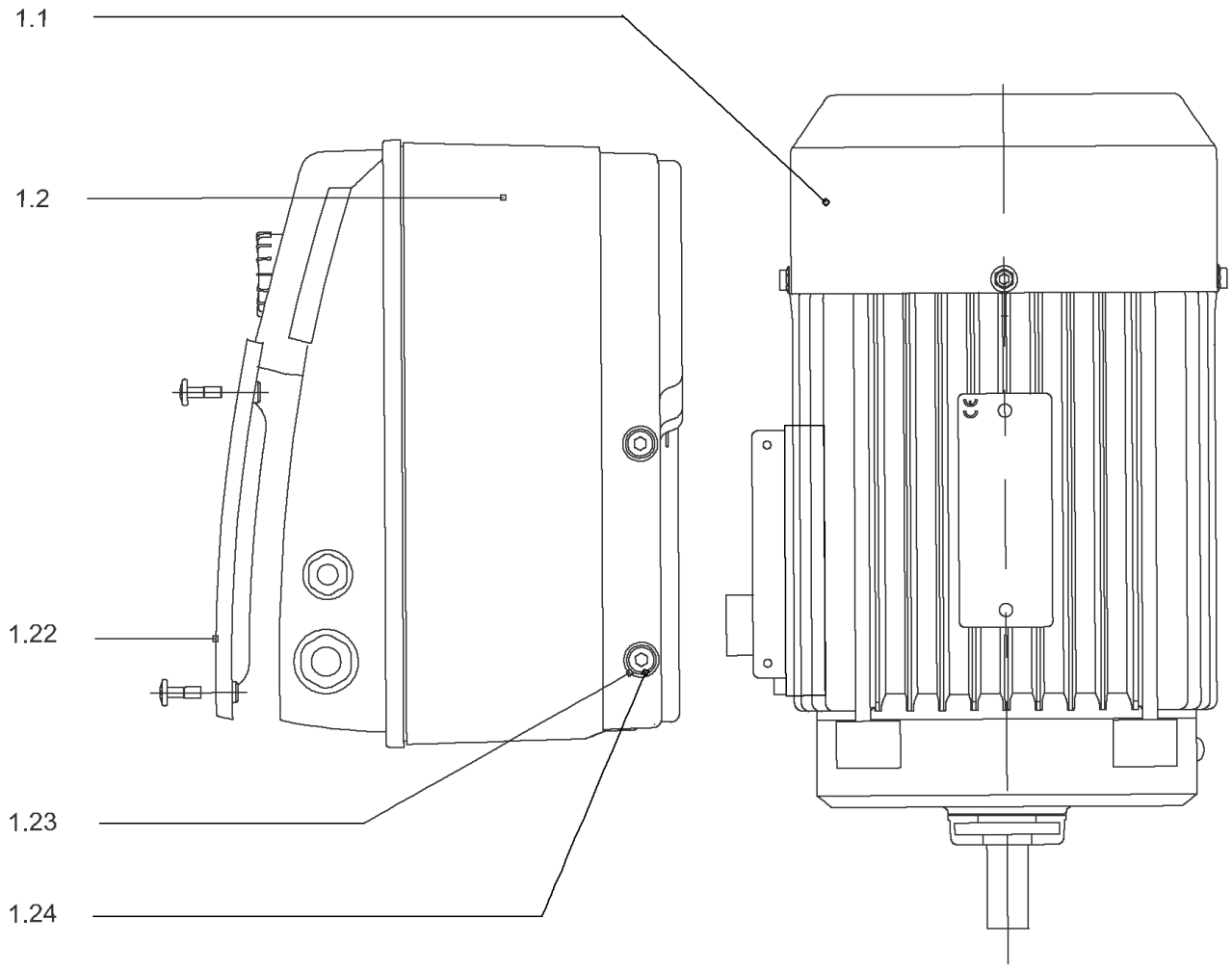
1.1
1.2
1.22
1.23
1.24

## DRIVE HELIX-VE1005-IE4-WE-KIT

| Item | Article no. | Description | Quantity |
|---|---|---|---|
| 1.1 | 4207922 | MOTOR 3/2/100 3~ 380V 60HZ IE4 WE VP. | 1 |
| | | SPARE PARTS MOTOR:ON REQUEST | 1 |
| 1.2 | 4209339 | MODULE HELIX-VE1005-IE4-WE KIT | 1 |
| 1.22 | 2054227 | > MODULE COVER/GASKET TL3/4 KIT | 1 |
| 1.23 | 4215716 | > SCREW M5X16 DIN912 8.8 A2A (4pieces) VP. | 1 |
| 1.24 | 2057978 | > RONDELLE A5,3 DIN6797 FST ZN (4 PIECES) | 1 |

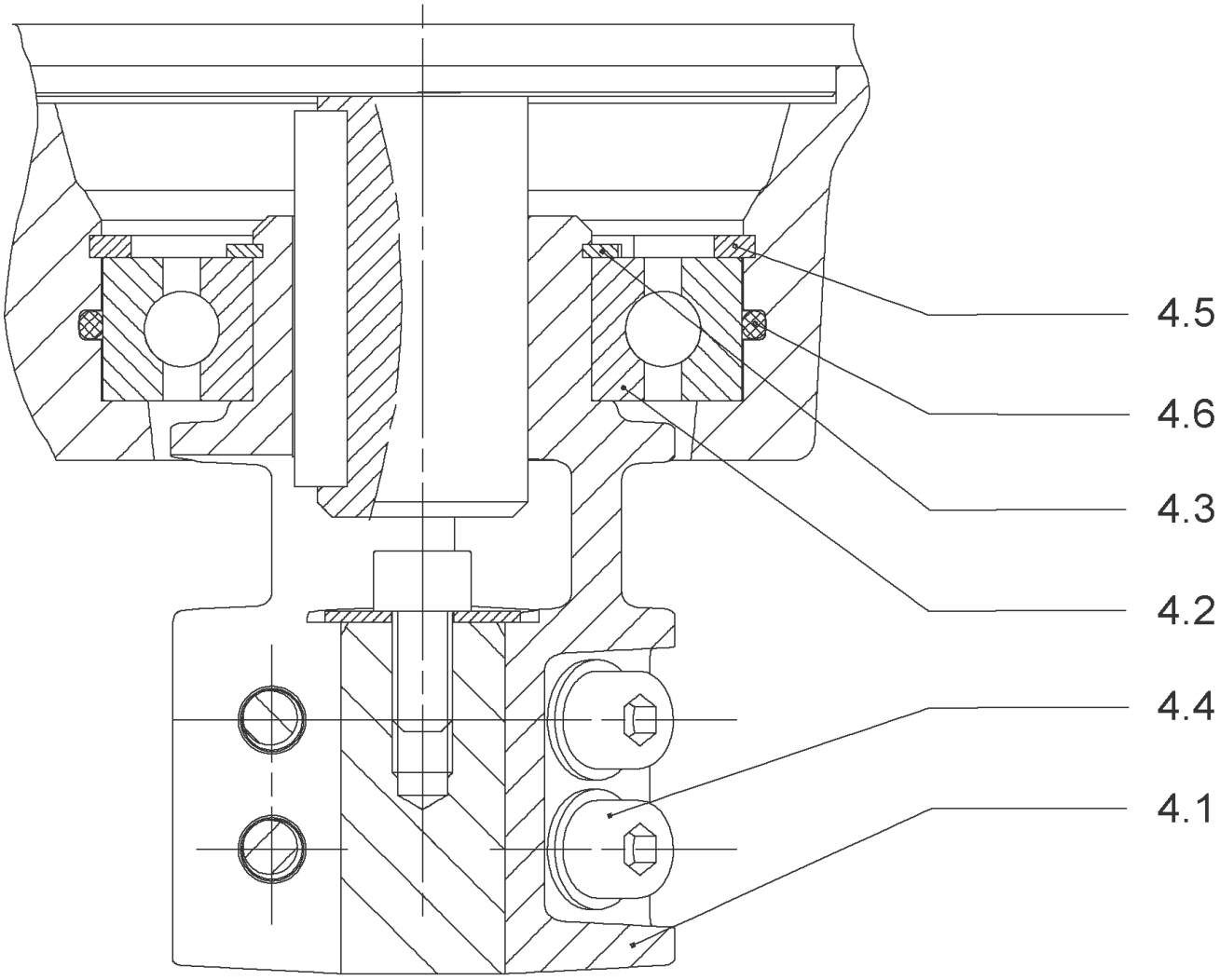
4.5
4.6
4.3
4.2
4.4
4.1

## COUPLING D.16XD.28 FT130 HELIX KIT (4159710)

| Item | Article no. | Description | Quantity |
|---|---|---|---|
| 4.1 | | COUPLING M+ Ø16XØ28 FT130 MACHINED | 1 |
| 4.2 | 2131022 | BALL BEARING 6209/ZZ-C3(HT)VP. | 1 |
| 4.3 | 4233930 | CIRCLIP-FOR-BORES-D45x1,75 VP. | 1 |
| 4.4 | 4157726 | SCREW KIT M8X30 (4 PIECES) | 1 |
| 4.5 | 4234252 | CIRCLIPS 85X3 VP. | 1 |
| 4.6 | 4234243 | O-RING 85X3 VP. | 1 |
| | | NOMEL CONTACT WASHER 8x16x1,4 STEEL ZC | 1 |

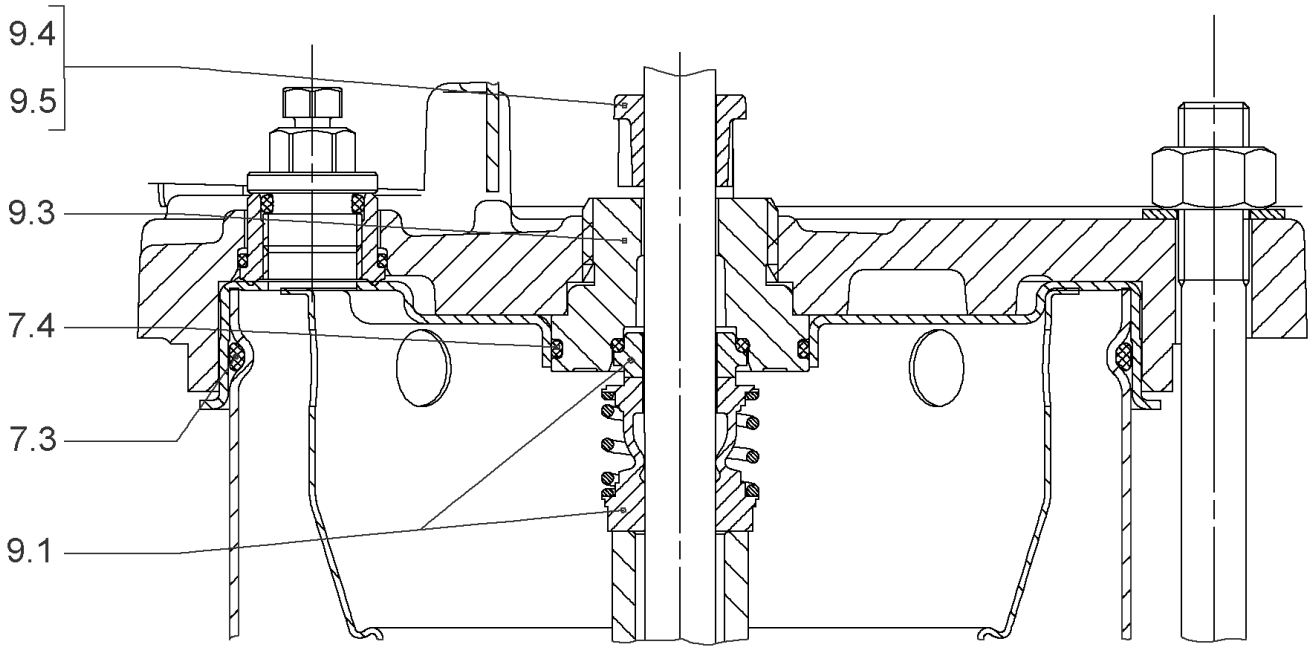
9.4
9.5
9.3
7.4
7.3
9.1

## SEAL-KIT-HELIX6-10-16 O/E KIT (4171327)

| Item | Article no. | Description | Quantity |
|---|---|---|---|
| 7.3 | 4176513 | O-RING FOR PUMP JACKET VP. | 1 |
| 7.4 | 2127603 | O-RING ID.37,6x2,4 EPDM VP. | 1 |
| 9.1 | 4177801 | MECH.SEAL HELIX6-10-16 O/E VP. | 1 |
| 9.3 | 4177798 | MACHINED RING HOLDER M+6" Ø16 304 VP. | 1 |
| 9.5 | 4177799 | MACHINED DRIVE RING Ø16 VP. | 1 |
| 9.4 | 4176520 | SCREW CH M5x5 A4-70 ( 3PIECES ) | 1 |

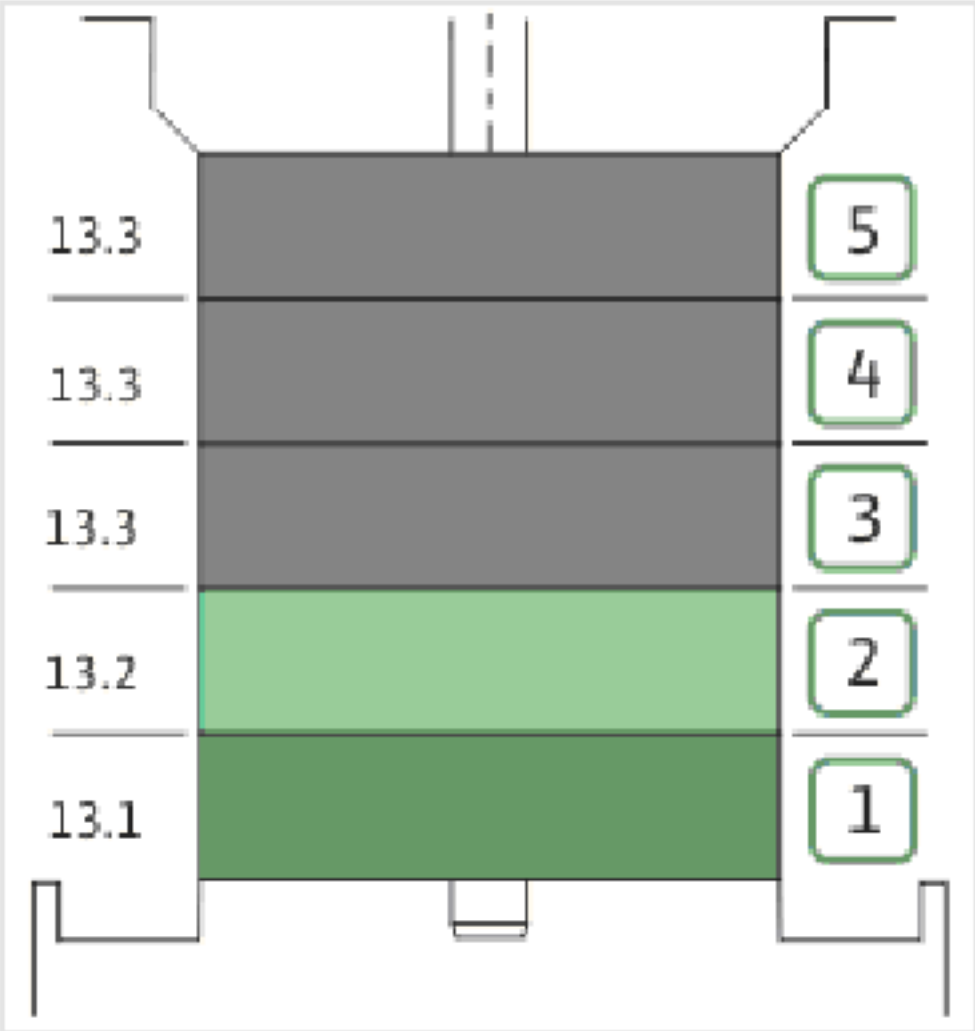
13.3
13.3
13.3
13.2
13.1
5
4
3
2
1

| Item | Article no. | Description | Quantity |
|---|---|---|---|
| 13.1 | 4171331 | STAGE HELIX10 1.4301KIT | 1 |
| | | > MACH.STG-CASING-WOGV-WNR-M+10-304 | 1 |
| | | > IMPELLER-M+10-304 | 1 |
| 13.2 | 4172792 | INTERMEDIATE STAGE HELIX 10 1.4301 KIT | 1 |
| | | > MACH.BEARING-STG-CASING-WNR-M+10-304 | 1 |
| | | > IMPELLER-M+10-304 | 1 |
| | | > SHAFT SLEEVE-SPACER-Ø19,35x18,465-304 | 1 |
| | | > SHAFT-SLEEVE-D16xD20x18-CW | 1 |
| 13.3 | 4172793 | INTERMEDIATE STAGE HELIX 10 1.4301 KIT | 1 |
| | | > MACH.STD-STG-CASING-WGV+NR-M+10-304 | 1 |
| | | > IMPELLER-M+10-304 | 1 |
| | | > IMPELLER SPACER Ø16,05X19,45-L36,465-304 | 1 |

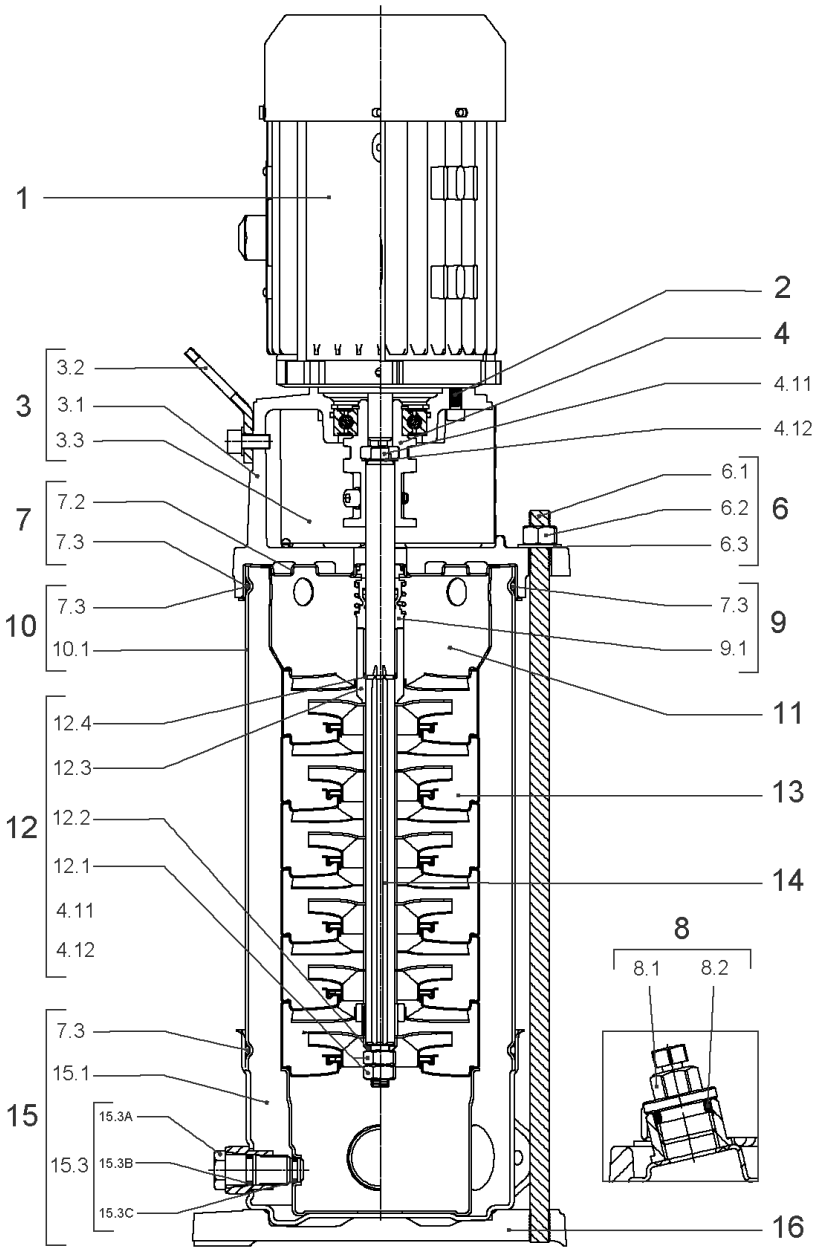
1
2
4
4.11
4.12
3
3.2
3.1
3.3
7
7.2
7.3
10
7.3
10.1
6
6.1
6.2
6.3
9
7.3
9.1
11
12
12.4
12.3
12.2
12.1
4.11
4.12
13
14
8
8.1
8.2
15
7.3
15.1
15.3
15.3A
15.3B
15.3C
16

## HELIX VE1005-1/16/E/S (4201553)

| Item | Article no. | Description | Quantity |
|---|---|---|---|
| 1 | | DRIVE HELIX-VE1005-IE4-WE-KIT | 1 |
| Note: MOTOR BRAND WILO ELEC | | | |
| | | SPARE PARTS MOTOR:ON REQUEST | 1 |
| 2 | 4159707 | SCREW M8X30 (4 PIECES) | 1 |
| 3 | 4214473 | LANTERN FT130 HELIX KIT | 1 |
| 3.1 | | > LANT-MOT-VMI-ReDTC6"-FT130-MACHINED+CATA | 1 |
| 3.2 | 4184852 | > EYELET CPL.FT HELIX (2 PIECES) | 1 |
| 3.3 | 4213782 | > COUPLING PROTECTOR FT115/130 HELIX KIT | 1 |
| 4 | 4159710 | COUPLING D.16XD.28 FT130 HELIX KIT | 1 |
| 6 | 2018576 | STUD BOLT M12X377 KIT | 1 |
| 6.1 | | > TIE BOLT M12-377x18x30-1.4057 | 1 |
| 6.2 | 2094647 | > NUT M12 M12 ISO4032 VP. | 1 |
| 6.3 | 2123557 | > WASHER CS-12.4-24-1.6-NFE25 (4 PIECES) | 1 |
| 7 | 4214481 | STATIONARY RING HOLDER HELIX D27 ReDTC | 1 |
| 7.2 | 4214479 | > STATIONARY RING HOLDER HELIX D27 VP. | 1 |
| 7.3 | 4176513 | > O-RING FOR PUMP JACKET VP. | 1 |
| 8 | 4212724 | FILING/PURGING PLUG HELIX ReDTC KIT | 1 |
| 8.1 | | > FILLING PLUG MVI6"-304 | 1 |
| 8.2 | 4177800 | > O-RING EPDM PLUG HELIX VP. | 1 |
| 9 | 4214483 | MECH.SEAL HELIX6-10-16 O/E ReDTC KIT | 1 |
| 9.1 | 4177801 | > MECH.SEAL HELIX6-10-16 O/E VP. | 1 |
| 7.3 | 4176513 | > O-RING FOR PUMP JACKET VP. | 1 |
| 10 | 4176518 | HOUSING PIPES D.152X247 1.4301 KIT | 1 |
| 7.3 | 4176513 | > O-RING FOR PUMP JACKET VP. | 1 |
| 10.1 | | > HOUSING-PIPE Ø152-M+1005-304 | 1 |
| 11 | 4172791 | CENTERING STAGE-RETURN HELIX10 1.4301VP. | 1 |
| 12 | 4214517 | SHAFT EQUIPMENT HELIX V10 ReDTC KIT | 1 |
| 12.1 | | > NUT-H-M10-A4.70 | 1 |
| 12.2 | | > SERRATED LOCK WASHER M+10M3-316L | 1 |
| 12.3 | | > 1/2-SNAP-RING-6/10M3-316L | 1 |
| 12.4 | | > STOP-RUSH-1/2-D16xd2-M+316 | 1 |
| 4.11 | | > SCREW CHC-M6X14-8.8-ISO4762-GEOMET500A | 1 |
| 4.12 | | > WASHER D.24 L6U ZINK | 1 |
| 13 | | HYDRAULIC HELIX V 1005 1.4307 | 1 |

| Item | Article no. | Description | Quantity |
|---|---|---|---|
| 14 | 4214498 | SHAFT D.16X316 HELIX 1.4057 VP. | 1 |
| 15 | 4159682 | PUMP HOUSING HELIX DN50 PN16 1.4301 KIT | 1 |
| 7.3 | 4176513 | > O-RING FOR PUMP JACKET VP. | 1 |
| 15.1 | | > BLASTING PPE HOUSING V-PN16-DN50-304 | 1 |
| 15.2 | 4217893 | > COUNTER FLANGE-G1"1/2-PN16-GJL KIT | 1 |
| 15.3 | 4171321 | > PRIMING/DRAIN PLUG EPDM HELIX KIT | 1 |
| 16 | 4176517 | BASEPLATE V8/10 VP. | 1 |

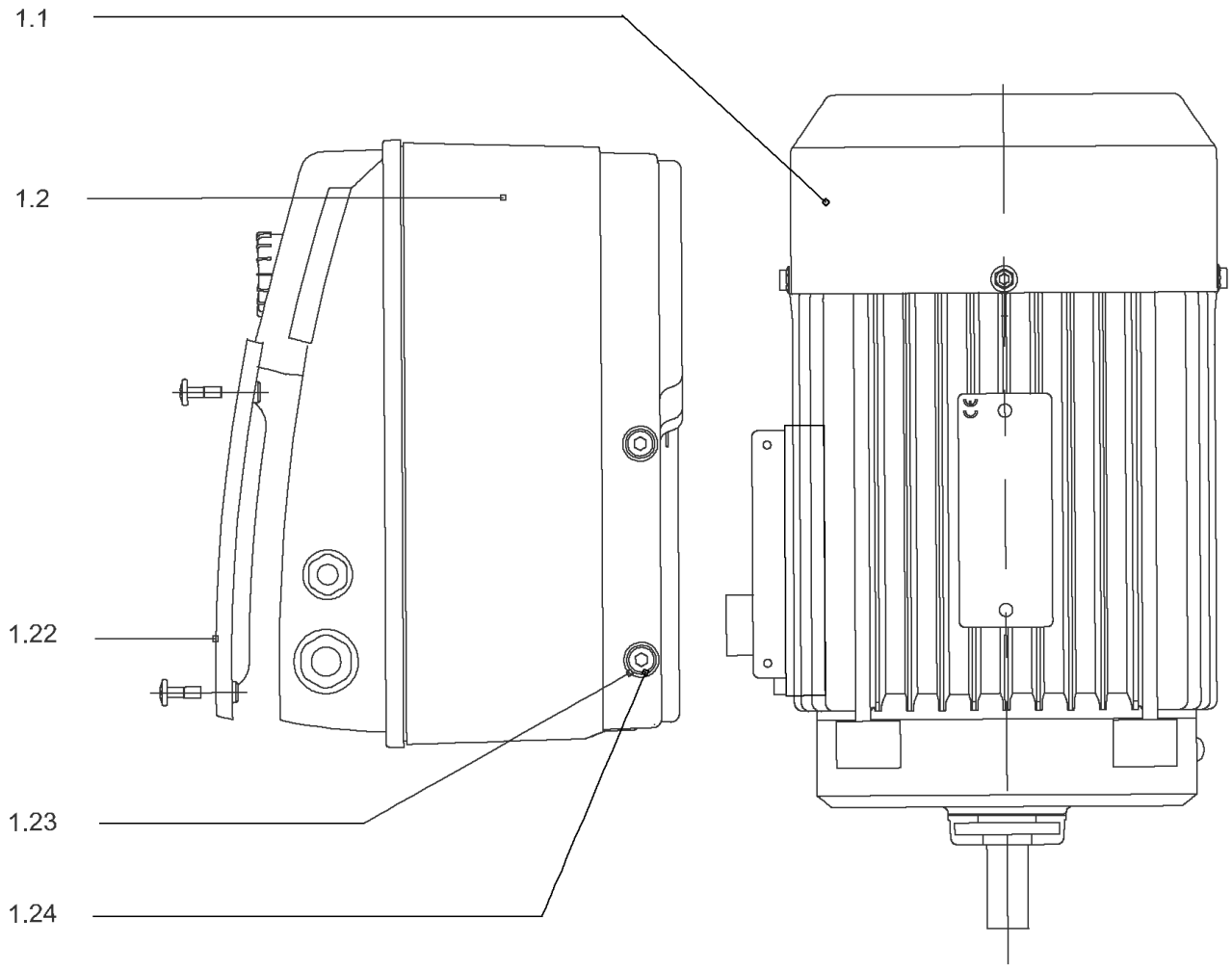
1.1
1.2
1.22
1.23
1.24

## DRIVE HELIX-VE1005-IE4-WE-KIT

| Item | Article no. | Description | Quantity |
|---|---|---|---|
| 1.1 | 4207922 | MOTOR 3/2/100 3~ 380V 60HZ IE4 WE VP. | 1 |
| | | SPARE PARTS MOTOR:ON REQUEST | 1 |
| 1.2 | 4209339 | MODULE HELIX-VE1005-IE4-WE KIT | 1 |
| 1.22 | 2054227 | > MODULE COVER/GASKET TL3/4 KIT | 1 |
| 1.23 | 4215716 | > SCREW M5X16 DIN912 8.8 A2A (4pieces) VP. | 1 |
| 1.24 | 2057978 | > RONDELLE A5,3 DIN6797 FST ZN (4 PIECES) | 1 |

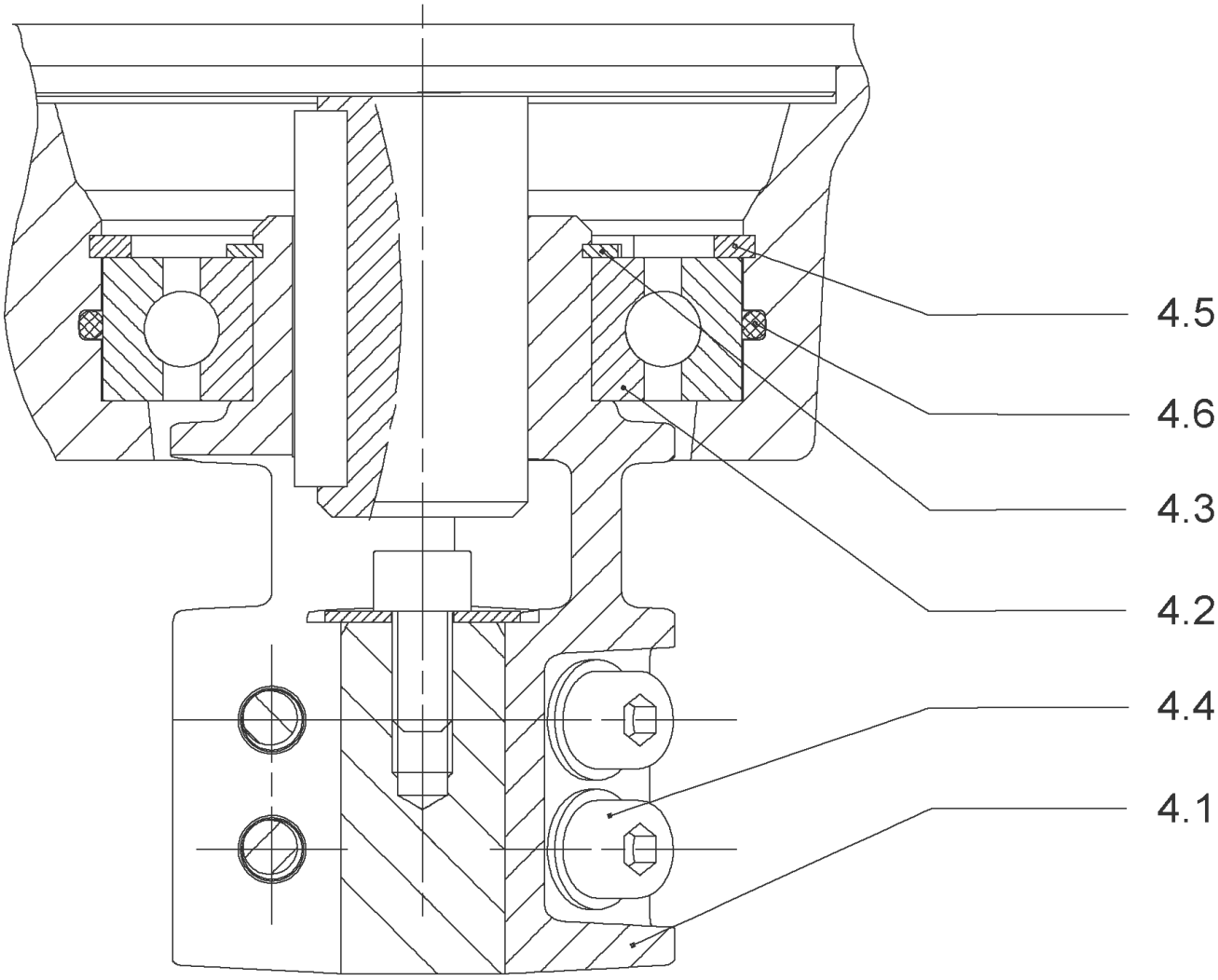
4.5
4.6
4.3
4.2
4.4
4.1

## COUPLING D.16XD.28 FT130 HELIX KIT (4159710)

| Item | Article no. | Description | Quantity |
|---|---|---|---|
| 4.1 | | COUPLING M+ Ø16XØ28 FT130 MACHINED | 1 |
| 4.2 | 2131022 | BALL BEARING 6209/ZZ-C3(HT)VP. | 1 |
| 4.3 | 4233930 | CIRCLIP-FOR-BORES-D45x1,75 VP. | 1 |
| 4.4 | 4157726 | SCREW KIT M8X30 (4 PIECES) | 1 |
| 4.5 | 4234252 | CIRCLIPS 85X3 VP. | 1 |
| 4.6 | 4234243 | O-RING 85X3 VP. | 1 |
| | | NOMEL CONTACT WASHER 8x16x1,4 STEEL ZC | 1 |

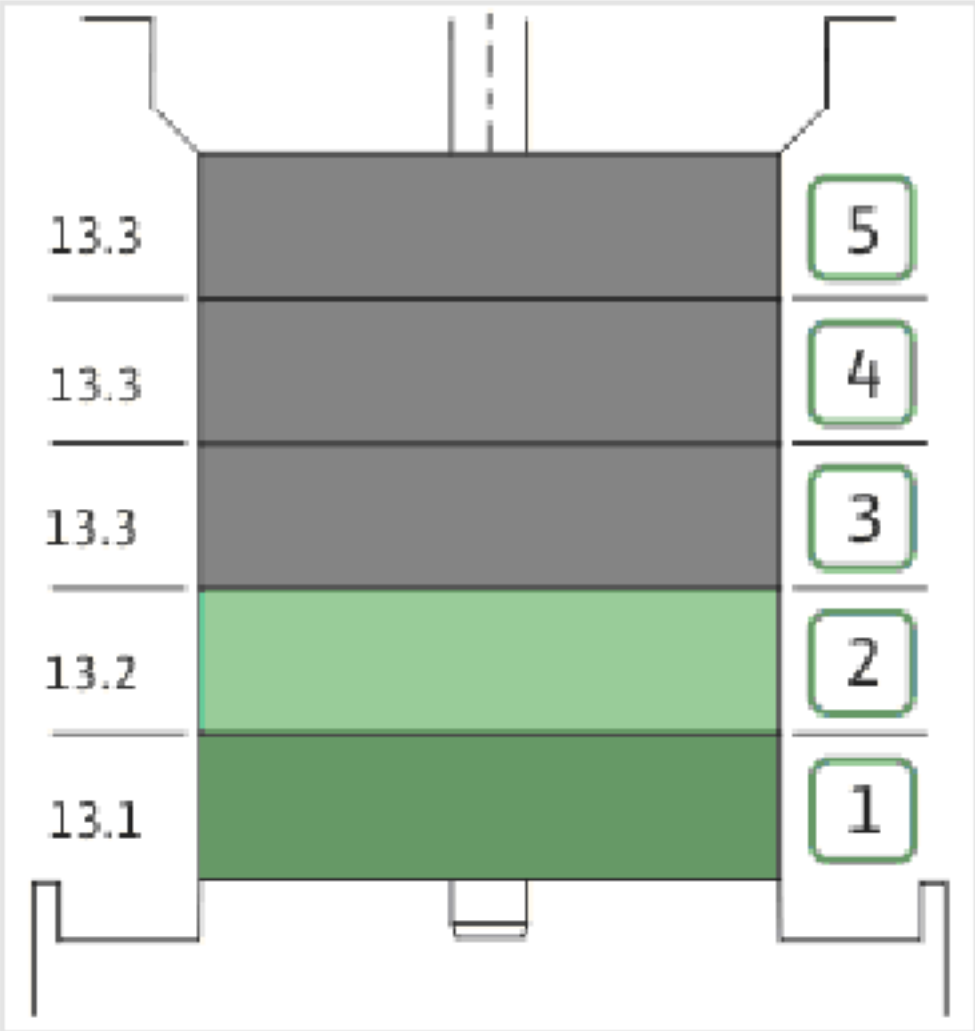
13.3
13.3
13.3
13.2
13.1
5
4
3
2
1

| Item | Article no. | Description | Quantity |
|---|---|---|---|
| 13.1 | 4171331 | STAGE HELIX10 1.4301KIT | 1 |
| | | > MACH.STG-CASING-WOGV-WNR-M+10-304 | 1 |
| | | > IMPELLER-M+10-304 | 1 |
| 13.2 | 4172792 | INTERMEDIATE STAGE HELIX 10 1.4301 KIT | 1 |
| | | > MACH.BEARING-STG-CASING-WNR-M+10-304 | 1 |
| | | > IMPELLER-M+10-304 | 1 |
| | | > SHAFT SLEEVE-SPACER-Ø19,35x18,465-304 | 1 |
| | | > SHAFT-SLEEVE-D16xD20x18-CW | 1 |
| 13.3 | 4172793 | INTERMEDIATE STAGE HELIX 10 1.4301 KIT | 1 |
| | | > MACH.STD-STG-CASING-WGV+NR-M+10-304 | 1 |
| | | > IMPELLER-M+10-304 | 1 |
| | | > IMPELLER SPACER Ø16,05X19,45-L36,465-304 | 1 |

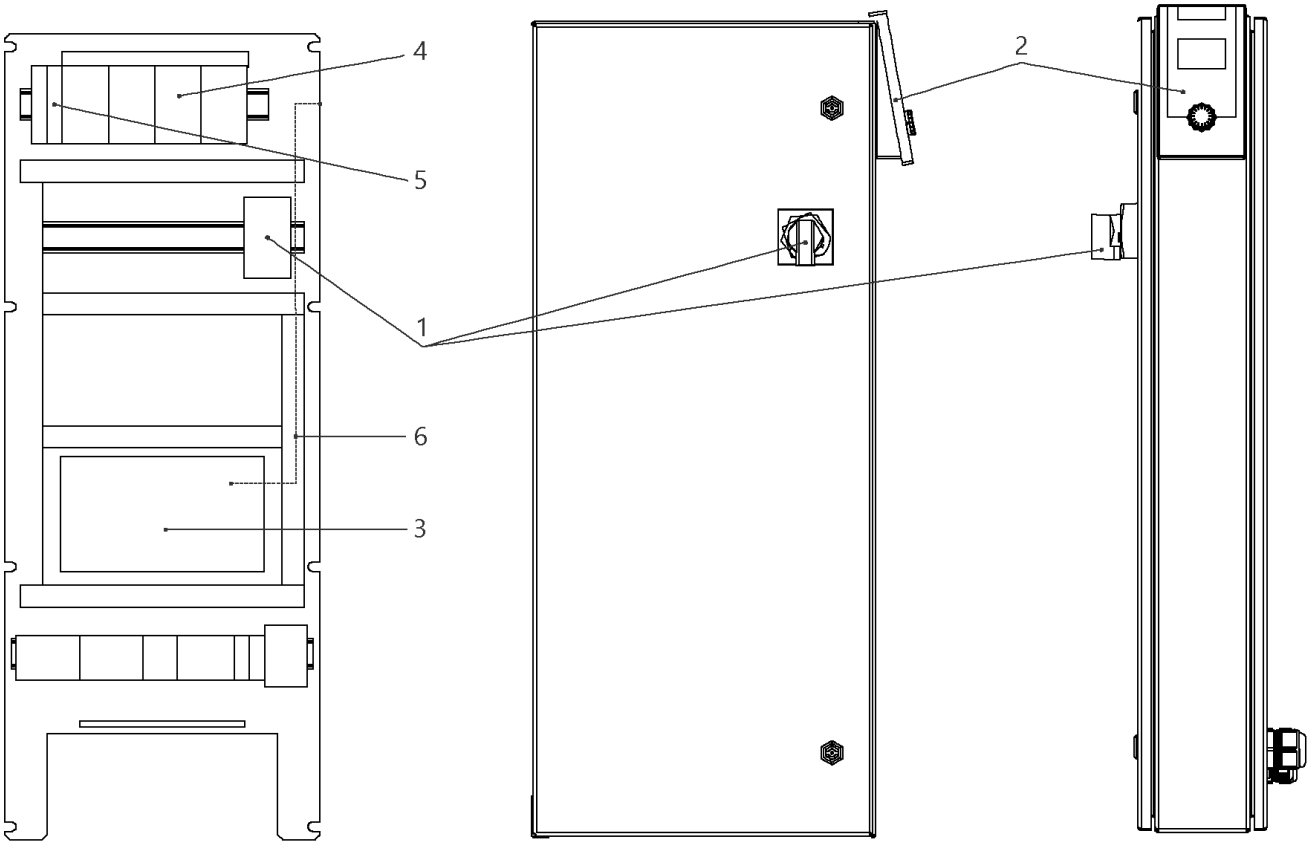
4
5
1
6
3
2

## W-CTRL-SCE-B-3x4,0KW-T4-FM-ND2

| Item | Article no. | Description | Quantity |
|---|---|---|---|
| 1 | 2104473 | MAIN SWITCH OT63F3 L105 KIT | 1 |
| 2 | 4184784 | CONTROL PANEL HMI SC KIT | 1 |
| 2 | 4185259 | ASSEMBLY DISPLAY SC PKG VP. | 1 |
| 3 | 4185257 | ASSEMBLY CPU SCe Booster VP. | 1 |
| 4 | 2051217 | AUTOM.CIRCUIT BREAKER S203 B16 TO7,5kW | 1 |
| 5 | 2046288 | CIRCUIT BREAKER S201 B16 | 1 |
| 6 | 4194956 | PATCH CABLE RJ45 CAT6 1,0M BLUE SC-PANEL | 1 |

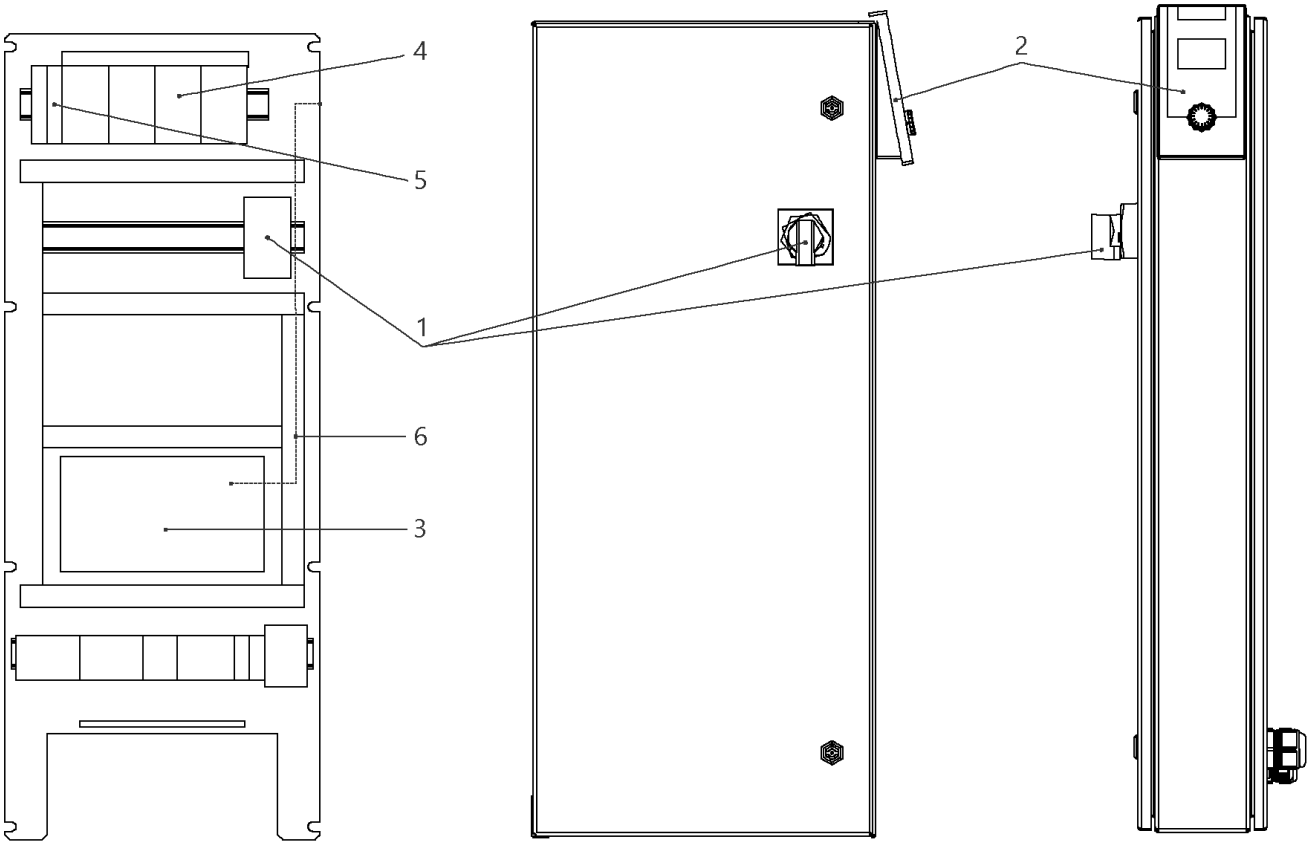
4
5
1
6
3
2

## W-CTRL-SCE-B-3x13A-T34-FM-ND2-AVC-PKG (2541906)

| Item | Article no. | Description | Quantity |
|---|---|---|---|
| 1 | 2104473 | MAIN SWITCH OT63F3 L105 KIT | 1 |
| 2 | 4184784 | CONTROL PANEL HMI SC KIT | 1 |
| 2 | 4185259 | ASSEMBLY DISPLAY SC PKG VP. | 1 |
| Note: DISPLAY ALONE / PLATINE SEULE | | | |
| 3 | 4185257 | ASSEMBLY CPU SCe Booster VP. | 1 |
| 4 | 2051217 | AUTOM.CIRCUIT BREAKER S203 B16 TO7,5kW | 1 |
| 5 | 2046288 | CIRCUIT BREAKER S201 B16 | 1 |
| 6 | 4194956 | PATCH CABLE RJ45 CAT6 1,0M BLUE SC-PANEL | 1 |

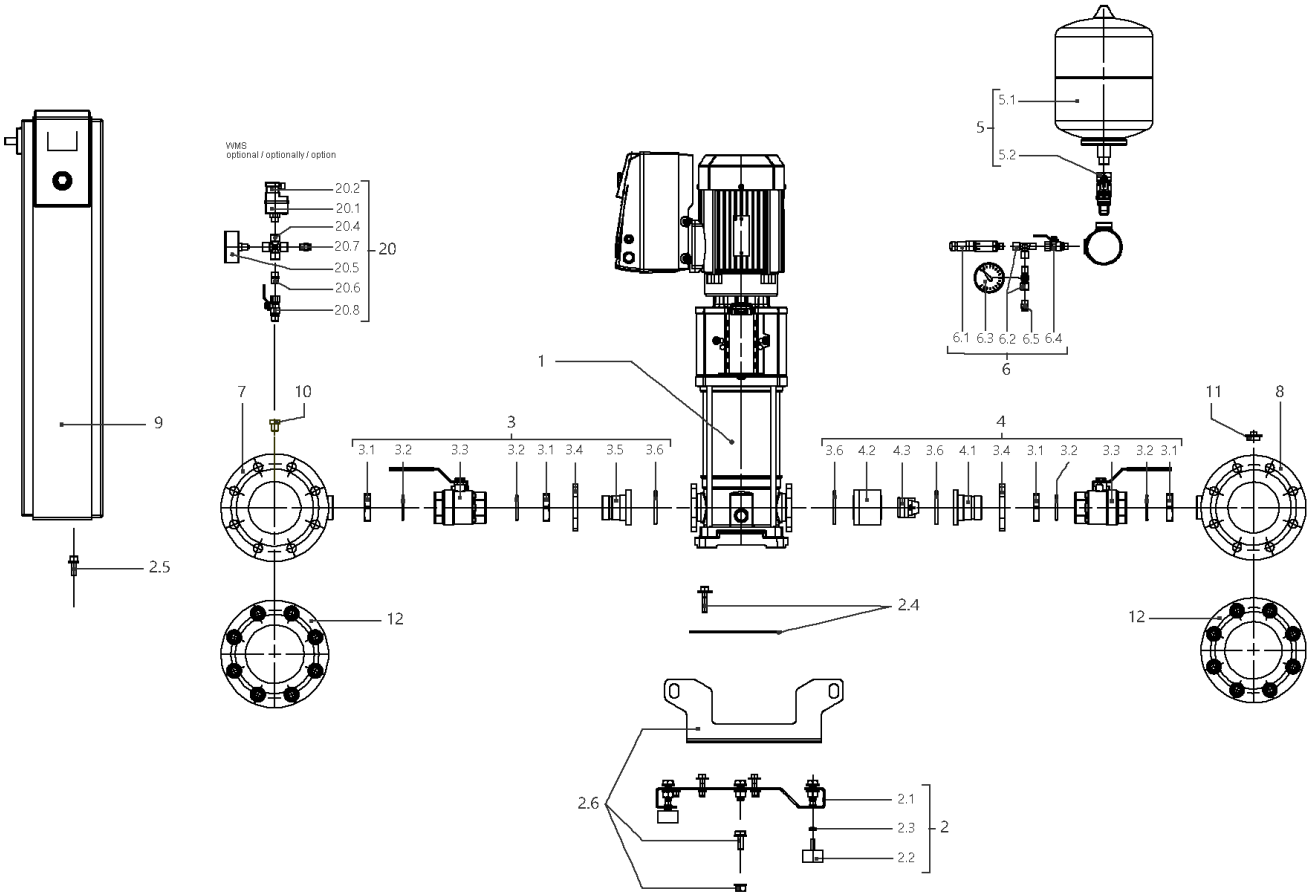
VIMS
optional / optionally / option
20.2
20.1
20.4
20.7
20.5
20.6
20.8
20
5.1
5
5.2
6.1 6.3 6.2 6.5 6.4
6
1
7
10
3
3.1 3.2 3.3 3.2 3.1 3.4 3.5 3.6
4
3.6 4.2 4.3 3.6 4.1 3.4 3.1 3.2 3.3 3.2 3.1
11
8
9
2.5
12
2.4
12
2.6
2.1
2.3
2
2.2

## SiBoost Smart 3HELIX VE1603/3kW (2537345)

| Item | Article no. | Description | Quantity |
|---|---|---|---|
| 1 | | HELIX VE1603-3.0-1/16/E/S | 1 |
| Note: TO / BIS / JUSQU'AU 30/04/2016 | | | |
| 1 | 4201559 | HELIX VE1603-3.0-1/16/E/S | 1 |
| Note: FROM / AB / À PARTIR DU 01/05/2016 | | | |
| 2 | 4197116 | BASE PLATE DE3 1150x420 KIT | 1 |
| 2.1 | | > BASEPLATE_3x4/6/10/16V_E300_BOX_150 | 1 |
| 2.2 | 2028654 | > VIBRATION DAMPER D.50X30 M10X28 | 1 |
| 2.3 | 2028281 | > NUT M10 DIN936 (ISO4035) 17H VZ | 1 |
| 2.4 | 4197083 | > HOLDER PUMP Helix 10/16 KIT | 1 |
| 2.5 | 4197084 | > HOLDER SWITCHBOX WILO Smart Control KIT | 1 |
| 2.6 | 4197117 | > LIFTING Siboost HELIX SC KIT | 1 |
| 3 | 4197072 | SUCTION SIDE Siboost Helix10/16 KIT | 1 |
| 3.1 | 2032623 | > NUT G1 1/2"SW55 MS | 1 |
| 3.2 | 2032616 | > O-RING ID.44X3,53N DIN3771 E7502 | 1 |
| 3.2 | 2534877 | > BALL TAP KDW40-H G11/2I-I-DN40 DVGW | 1 |
| 3.4 | 2032626 | > OVAL FLANGE D52-LK100 ST-VZ | 1 |
| 3.5 | 2032627 | > UNION INSERT DN40 LAPPED FLANGE | 1 |
| 3.6 | 2032628 | > O-RING ID.56,52X5,33N DIN3771 E7502 | 1 |
| 4 | 4197829 | DELIVERY SIDE Siboost Helix V16 KIT | 1 |
| 3.1 | 2032623 | > NUT G1 1/2"SW55 MS | 1 |
| 3.2 | 2032616 | > O-RING ID.44X3,53N DIN3771 E7502 | 1 |
| 3.3 | 2534877 | > BALL TAP KDW40-H G11/2I-I-DN40 DVGW | 1 |
| 3.4 | 2032626 | > OVAL FLANGE D52-LK100 ST-VZ | 1 |
| 4.1 | 2054274 | > UNION INSERT DN40 LAPPED FLANGE(W.COLLAR | 1 |
| 4.2 | 2054270 | > HOUSING RFV(RV-IN) DN50 MS VP. | 1 |
| 4.3 | 2028284 | > NON-RETURN DEVICE UNIT NV50/DN50 VP. | 1 |
| 3.6 | 2032628 | > O-RING ID.56,52X5,33N DIN3771 E7502 | 1 |
| 5 | 2032642 | DIAPHREM TANK 8L/PN16 DIN4807/T5 KIT | 1 |
| 5.1 | 2045914 | > DIAPHREM TANK 8L TYP-DD 16BAR | 1 |
| 5.2 | 2027853 | > FLOW FITTING G3/4 FOR DIAPHRAGM VES. | 1 |
| 6 | 4197076 | PRESSURE SENSOR/ GAUGE 0-16BAR KIT | 1 |
| 6.1 | 2085909 | > PRESS.SENSOR 1/4" 0-16BAR 4-20MA VP. | 1 |
| 6.2 | 4197077 | > T-PIECE 1/4" VP. | 1 |
| 6.3 | 2028692 | > PRESSURE GAUGE NG63-PN16-G1/4 | 1 |

| Item | Article no. | Description | Quantity |
|---|---|---|---|
| 6.4 | 2028291 | > BALL TAP R1/4" PN42 GIACOMINI R254DL | 1 |
| 6.5 | 2028691 | > BLOWGUN 1/4" MS 30BAR VP. | 1 |
| 7 | 4197833 | PIPE DE3 DN100-3x11/2"+2x1/4x900 VP. | 1 |
| 8 | 4197834 | PIPE DE3 DN100-3x11/2"+2x1/4+1x3/4x900VP | 1 |
| 9 | | W-CTRL-SCE-B-3x4,0KW-T4-FM-ND2 | 1 |
| Note: TO / BIS / JUSQU'AU 18/05/2014 | | | |
| 9 | 2541906 | W-CTRL-SCE-B-3x13A-T34-FM-ND2-AVC-PKG | 1 |
| Note: FROM / AB / À PARTIR DU 19/05/2014 | | | |
| 10 | 4197079 | PLUG G1/4"x10 AISI304 KIT | 1 |
| 11 | 2032654 | PLUG R3/4" MS VIEGA 1751 | 1 |
| 12 | 4197835 | BLIND-FLANGE DN100 PN16 -1.4404 KIT | 1 |
| | 2106342 | > FLAT GASKET D.120/162X2 DN100 C4430 VP. | 1 |
| | | > NUT M16 DIN934 A2 1.4301 | 1 |
| | | > SCREW M16x70 DIN933 A2 (8 PIECES) | 1 |
| | | > WASHER A17 DIN125 A2 | 1 |
| | | > FULL FLANGE ST.DN100 PN16 EN1092-1/05 A | 1 |
| | | > FLANGE COVER DN100 DIN 3443 FORM A | 1 |
| 20 | 2521150 | ASSEMBLY WMS. DE-EB. +VP | 1 |
| 20.1 | 2028652 | > PRESSURE SWITCH PS3-ASR 1/(1,3) VP. | 1 |
| 20.2 | 2130983 | > PLUG PS3-415 WITH KABEL 1,5M 2NO VP. | 1 |
| 20.4 | 2028290 | > CROSSPIECE R1/4" MS-NICKEL | 1 |
| 20.5 | 2028687 | > PRESSURE GAUGE NG63 R1/4" HI.0-6BAR | 1 |
| 20.6 | 2054268 | > DUAL NIPPLE G1/4" x G1/4" MS VP. | 1 |
| 20.7 | 2028691 | > BLOWGUN 1/4" MS 30BAR VP. | 1 |
| 20.8 | 2028291 | > BALL TAP R1/4" PN42 GIACOMINI R254DL | 1 |

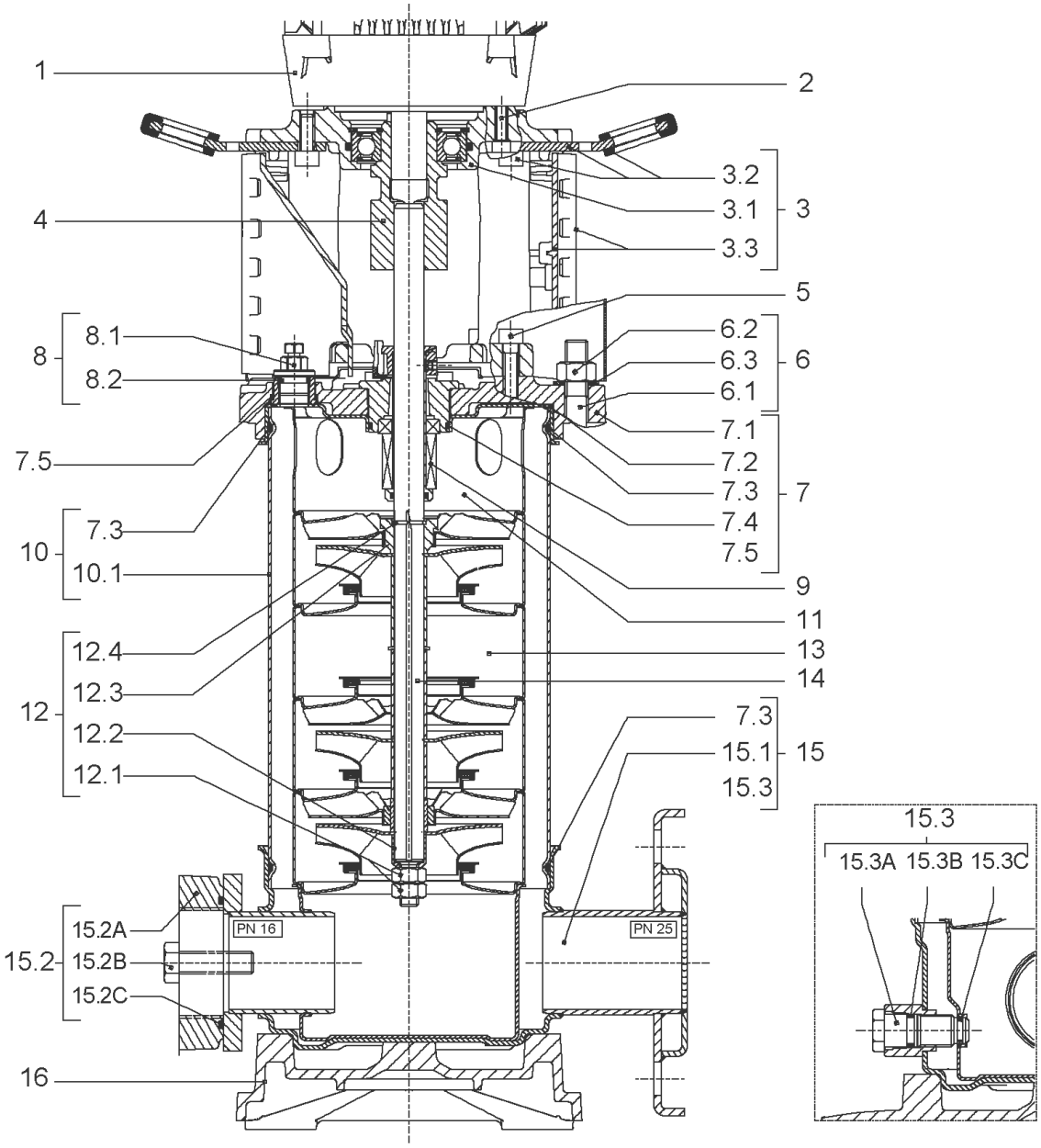
1
2
3.2
3.1
3
3.3
4
5
8.1
8
8.2
6.2
6.3
6
6.1
7.1
7.5
7.2
7.3
7
7.4
7.3
10
7.5
10.1
9
11
12.4
13
12.3
14
12
12.2
7.3
15.1
15
12.1
15.3
15.3
15.3A 15.3B 15.3C
15.2A
PN 16
PN 25
15.2
15.2B
15.2C
16

| Item | Article no. | Description | Quantity |
|---|---|---|---|
| 1 | | DRIVE HELIXVE1603-3.0-IE2-WE KIT | 1 |
| Note: MOTOR BRAND WILO ELEC | | | |
| 1 | | DRIVE HELIX-VE1603-3T-IE4-WE-KIT | 1 |
| Note: MOTOR BRAND WILO ELEC | | | |
| 2 | 4159703 | SCREW M8X40 (4 PIECES) | 1 |
| 3 | 4172789 | LANTERN FT130 HELIX V10 KIT | 1 |
| 3.1 | | > M+5_6_LANTERN_ONE-PIECE_FT130_CATA | 1 |
| 3.2 | 2127604 | > EYELET CPL.FT HELIX(2 PIECES) | 1 |
| 3.3 | 4159692 | > COUPLING PROTECTOR FT HELIX KIT | 1 |
| 4 | 4159710 | COUPLING D.16XD.28 FT130 HELIX KIT | 1 |
| 5 | 4159707 | SCREW M8X30 (4 PIECES) | 1 |
| 6 | 4177817 | STUD BOLT M12X341 KIT | 1 |
| 6.1 | | > TIE BOLT M12-341x18x30-1.4057 | 1 |
| 6.2 | 2094647 | > NUT M12 M12 ISO4032 VP. | 1 |
| 6.3 | 2123557 | > WASHER CS-12.4-24-1.6-NFE25 (4 PIECES) | 1 |
| 7 | 4210143 | STATIONARY RING HOLDER HELIX 6" EPDM | 1 |
| 7.2 | 2127607 | > STATIONARY RING HOLDER 6" HELIX 1.4301 V | 1 |
| 7.3 | 4176513 | > O-RING FOR PUMP JACKET VP. | 1 |
| 7.4 | 2127603 | > O-RING ID.37,6x2,4 EPDM VP. | 1 |
| 7.5 | 2127602 | > O-RING ID.21,35x2 EPDM VP. | 1 |
| 8 | 4159686 | FILING/PURGING PLUG HELIX EPDM KIT | 1 |
| 9 | 4171327 | SEAL-KIT-HELIX6-10-16 O/E KIT | 1 |
| 10 | 2127575 | HOUSING PIPE D.152x210 1.4301 KIT | 1 |
| 11 | 2127588 | CENTERING STAGE-RETURN HELIX16 1.4301 VP | 1 |
| 12 | 4209329 | SHAFT EQUIPMENT HELIX V16 KIT | 1 |
| 12.1 | | > NUT-H-M10-A4.70 | 1 |
| 12.2 | | > SERRATED LOCK WASHER M+16M3-316L | 1 |
| 12.3 | | > IMPELLER STOP RING L35,9-304 | 1 |
| 12.4 | | > STOP-RUSH-1/2-D16xd2-M+316 | 1 |
| 13 | | HYDRAULIC HELIX V 1603 1.4307 | 1 |
| 14 | 2127564 | SHAFT D.16X330 1.4301 VP. | 1 |
| 15 | 4217899 | PUMP HOUSING HELIX DN50 PN16 1.4301 KIT | 1 |
| 7.3 | 4176513 | > O-RING FOR PUMP JACKET VP. | 1 |
| 15.1 | | > BLASTING PPE HOUSING V-PN16-DN50-304 | 1 |

| Item | Article no. | Description | Quantity |
|---|---|---|---|
| 15.2 | 4217895 | > COUNTER FLANGE-G2"-PN16-GJL KIT | 1 |
| 15.3 | 4171321 | > PRIMING/DRAIN PLUG EPDM HELIX KIT | 1 |
| 16 | 2127601 | BASEPLATE HELIX V16 VP. | 1 |

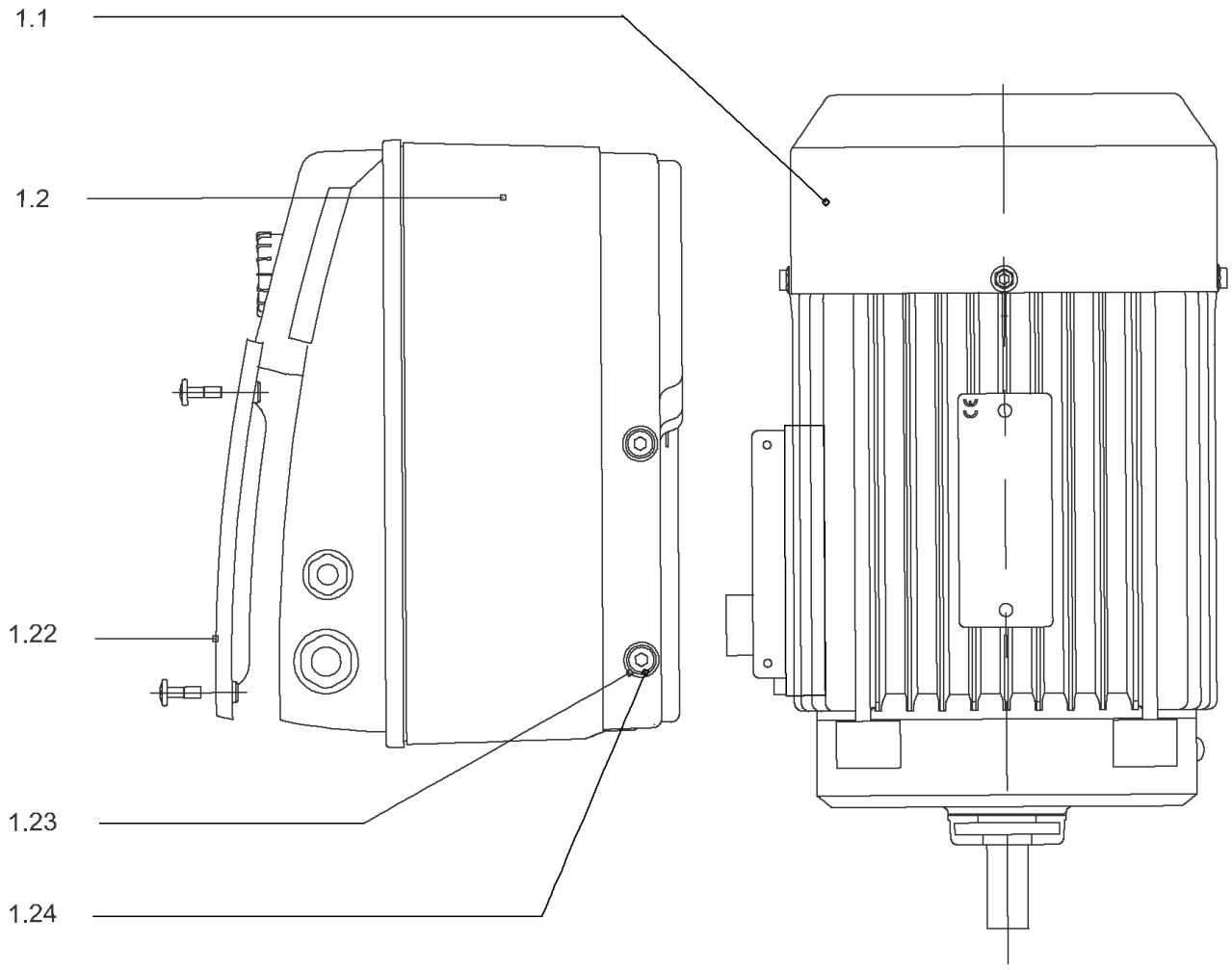
1.1
1.2
1.22
1.23
1.24

## DRIVE HELIXVE1603-3.0-IE2-WE KIT

| Item | Article no. | Description | Quantity |
|---|---|---|---|
| 1.1 | | M3-T638P55V18H-100F13-SU-N28-WE-IE2 VP. | 1 |
| Note: no longer available /nicht mehrlieferbarn'est plus disponible | | | |
| | | SPARE PARTS MOTOR:ON REQUEST | 1 |
| 1.2 | 4186405 | MODULE HELIX-VE1603-3.0-IE2-WE KIT | 1 |
| 1.22 | 2054227 | > MODULE COVER/GASKET TL3/4 KIT | 1 |
| 1.23 | 4215716 | > SCREW M5X16 DIN912 8.8 A2A (4pieces) VP. | 1 |
| 1.24 | 2057978 | > RONDELLE A5,3 DIN6797 FST ZN (4 PIECES) | 1 |

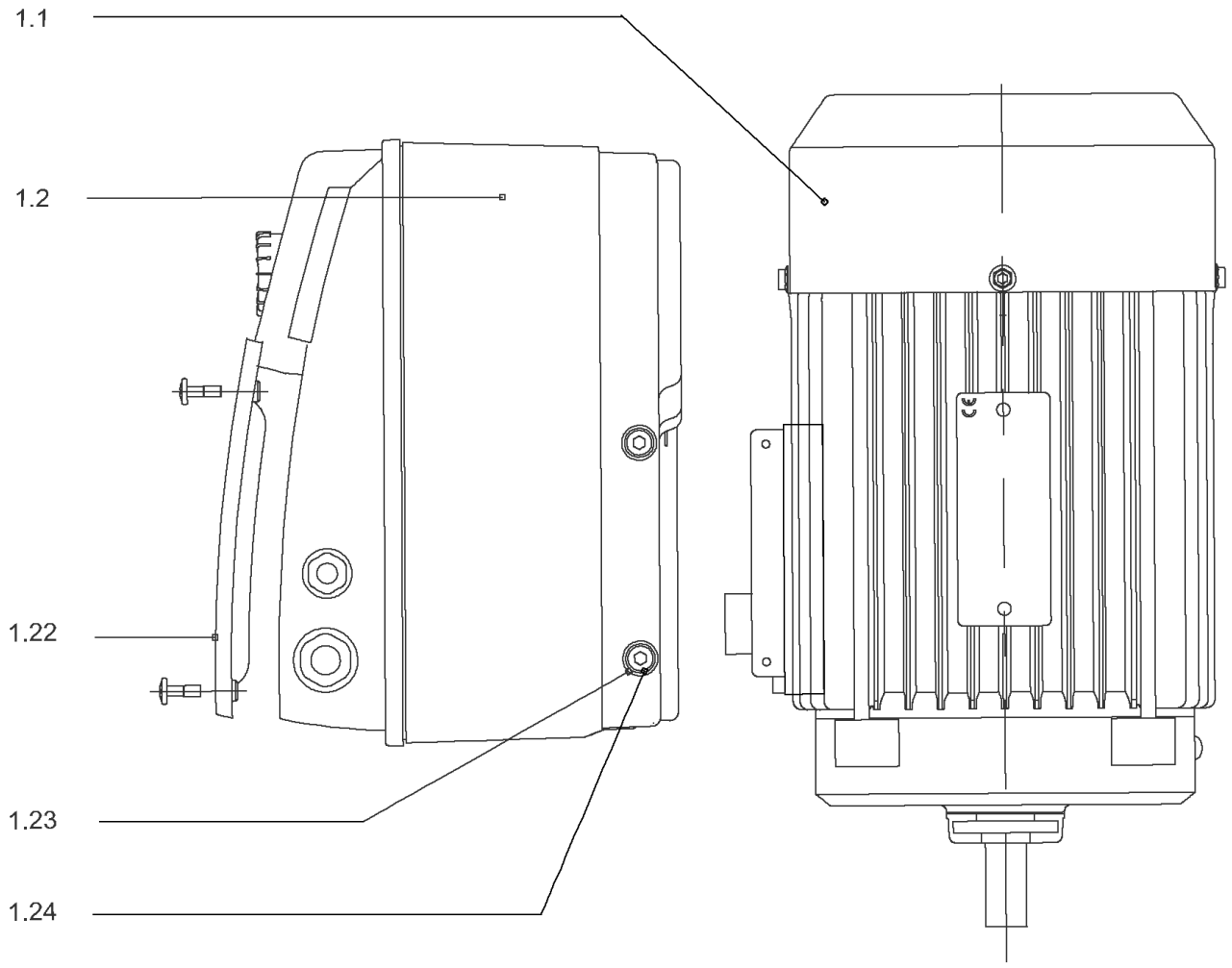
1.1
1.2
1.22
1.23
1.24

## DRIVE HELIX-VE1603-3T-IE4-WE-KIT

| Item | Article no. | Description | Quantity |
|---|---|---|---|
| 1.1 | 4207922 | MOTOR 3/2/100 3~ 380V 60HZ IE4 WE VP. | 1 |
| | | SPARE PARTS MOTOR:ON REQUEST | 1 |
| 1.2 | 4209340 | MODULE HELIX-VE1603-3.0-IE4-WE KIT | 1 |
| 1.22 | 2054227 | > MODULE COVER/GASKET TL3/4 KIT | 1 |
| 1.23 | 4215716 | > SCREW M5X16 DIN912 8.8 A2A (4pieces) VP. | 1 |
| 1.24 | 2057978 | > RONDELLE A5,3 DIN6797 FST ZN (4 PIECES) | 1 |

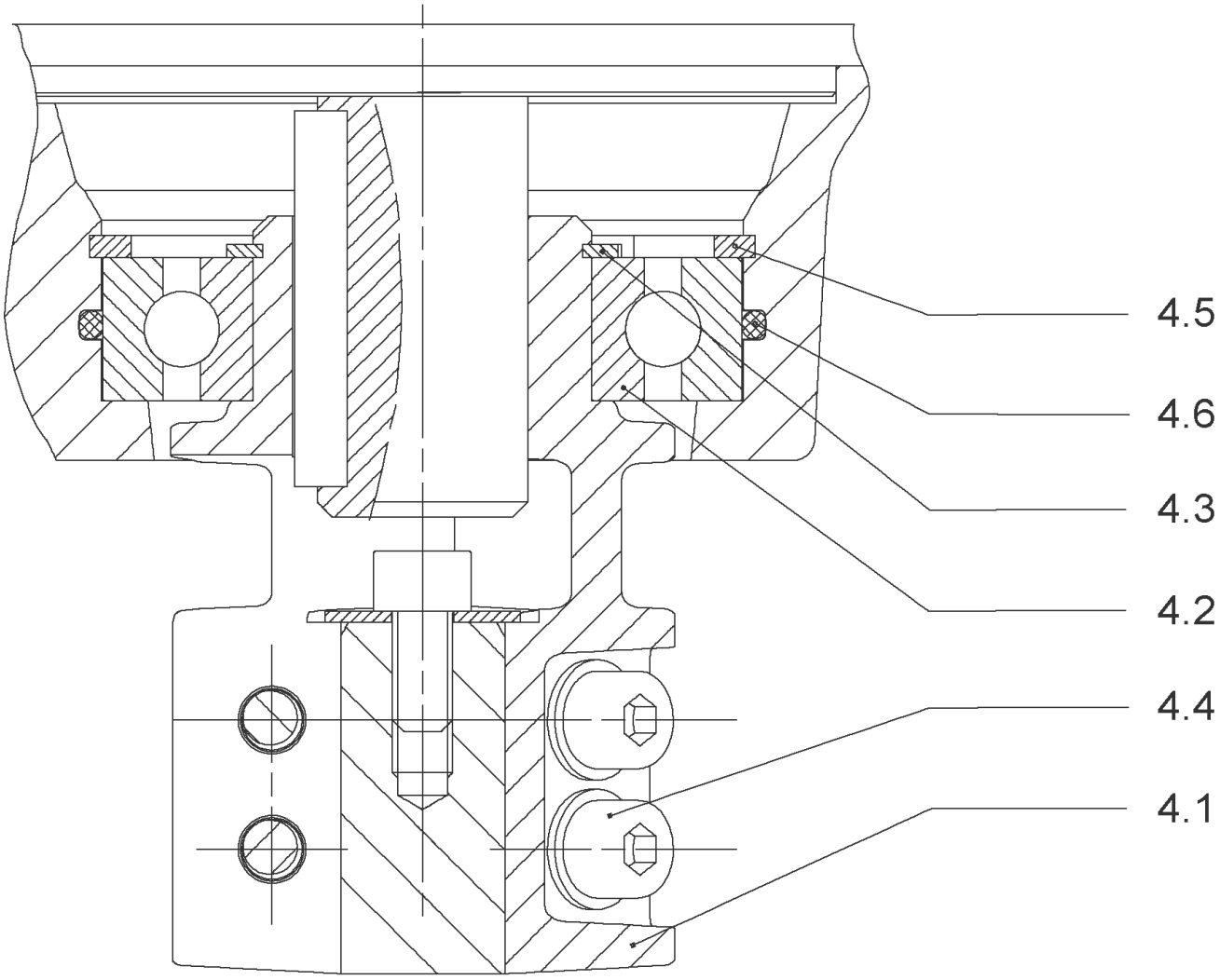
4.5
4.6
4.3
4.2
4.4
4.1

## COUPLING D.16XD.28 FT130 HELIX KIT (4159710)

| Item | Article no. | Description | Quantity |
|---|---|---|---|
| 4.1 | | COUPLING M+ Ø16XØ28 FT130 MACHINED | 1 |
| 4.2 | 2131022 | BALL BEARING 6209/ZZ-C3(HT)VP. | 1 |
| 4.3 | 4233930 | CIRCLIP-FOR-BORES-D45x1,75 VP. | 1 |
| 4.4 | 4157726 | SCREW KIT M8X30 (4 PIECES) | 1 |
| 4.5 | 4234252 | CIRCLIPS 85X3 VP. | 1 |
| 4.6 | 4234243 | O-RING 85X3 VP. | 1 |
| | | NOMEL CONTACT WASHER 8x16x1,4 STEEL ZC | 1 |

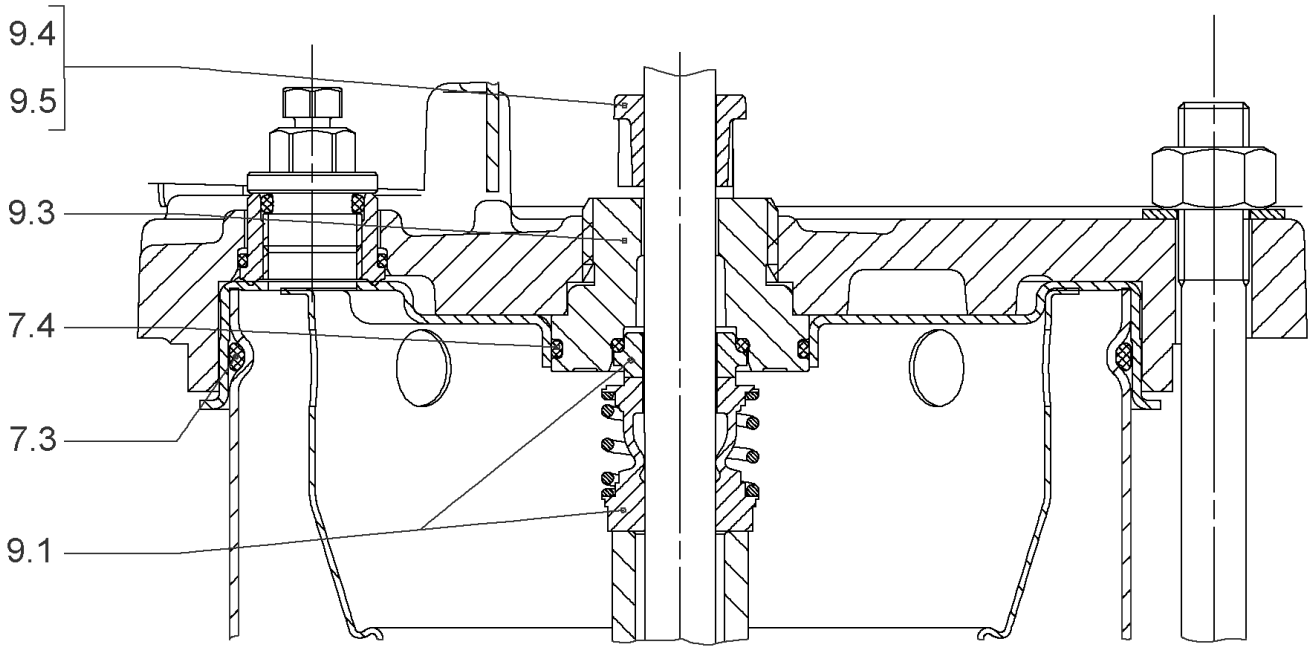
9.4
9.5
9.3
7.4
7.3
9.1

## SEAL-KIT-HELIX6-10-16 O/E KIT (4171327)

| Item | Article no. | Description | Quantity |
|---|---|---|---|
| 7.3 | 4176513 | O-RING FOR PUMP JACKET VP. | 1 |
| 7.4 | 2127603 | O-RING ID.37,6x2,4 EPDM VP. | 1 |
| 9.1 | 4177801 | MECH.SEAL HELIX6-10-16 O/E VP. | 1 |
| 9.3 | 4177798 | MACHINED RING HOLDER M+6" Ø16 304 VP. | 1 |
| 9.5 | 4177799 | MACHINED DRIVE RING Ø16 VP. | 1 |
| 9.4 | 4176520 | SCREW CH M5x5 A4-70 ( 3PIECES ) | 1 |

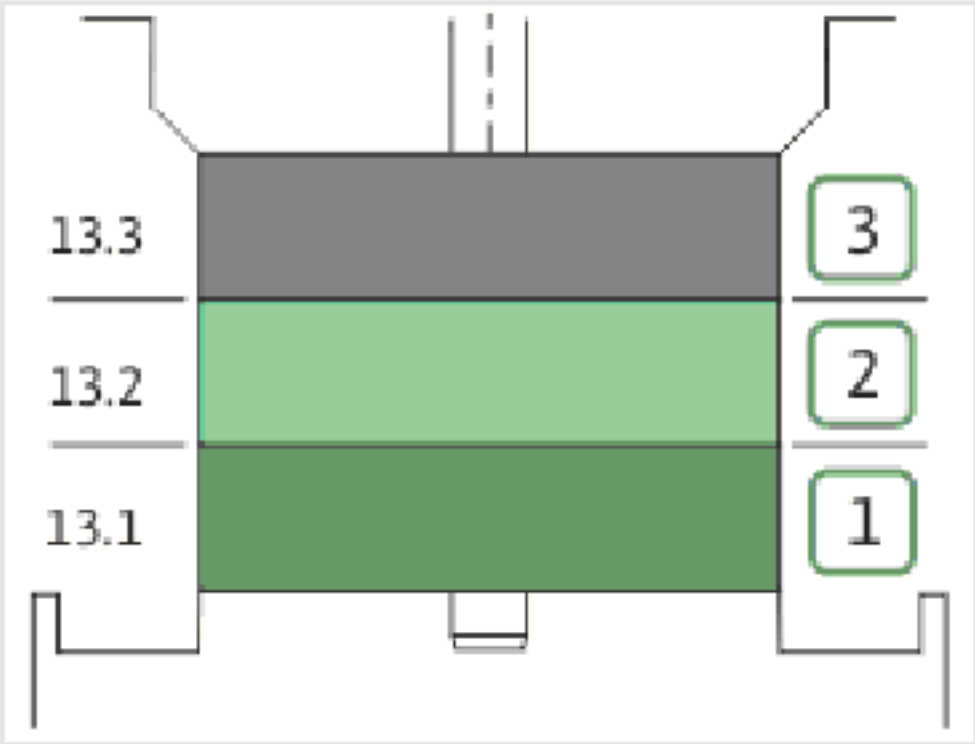
13.3
13.2
13.1
3
2
1

| Item | Article no. | Description | Quantity |
|---|---|---|---|
| 13.1 | 4159720 | STAGE HELIX 16 1.4301 KIT | 1 |
| | | > MACH.STG-CASING-WOGV-WNR-M+16-304 | 1 |
| | | > IMPELLER-M+16-304 | 1 |
| 13.2 | 4159714 | STAGE BEARING HELIX 16 1.4301 KIT | 1 |
| | | > MACH.BEARING-STG-CASING-WNR-M+16-304 | 1 |
| | | > IMPELLER-M+16-304 | 1 |
| | | > SLEEVE-SPACER-Ø19,35x30,665-304 | 1 |
| | | > SHAFT-SLEEVE-D16xD20x18-CW | 1 |
| 13.3 | 4159715 | INTERMEDIATE STAGE HELIX 16 1.4301 KIT | 1 |
| | | > CORPS-ETG-STD-ACR-AJR-USIN.M+16-304 | 1 |
| | | > IMPELLER-M+16-304 | 1 |
| | | > SPACER Ø16X19.4-L48.6-304 | 1 |

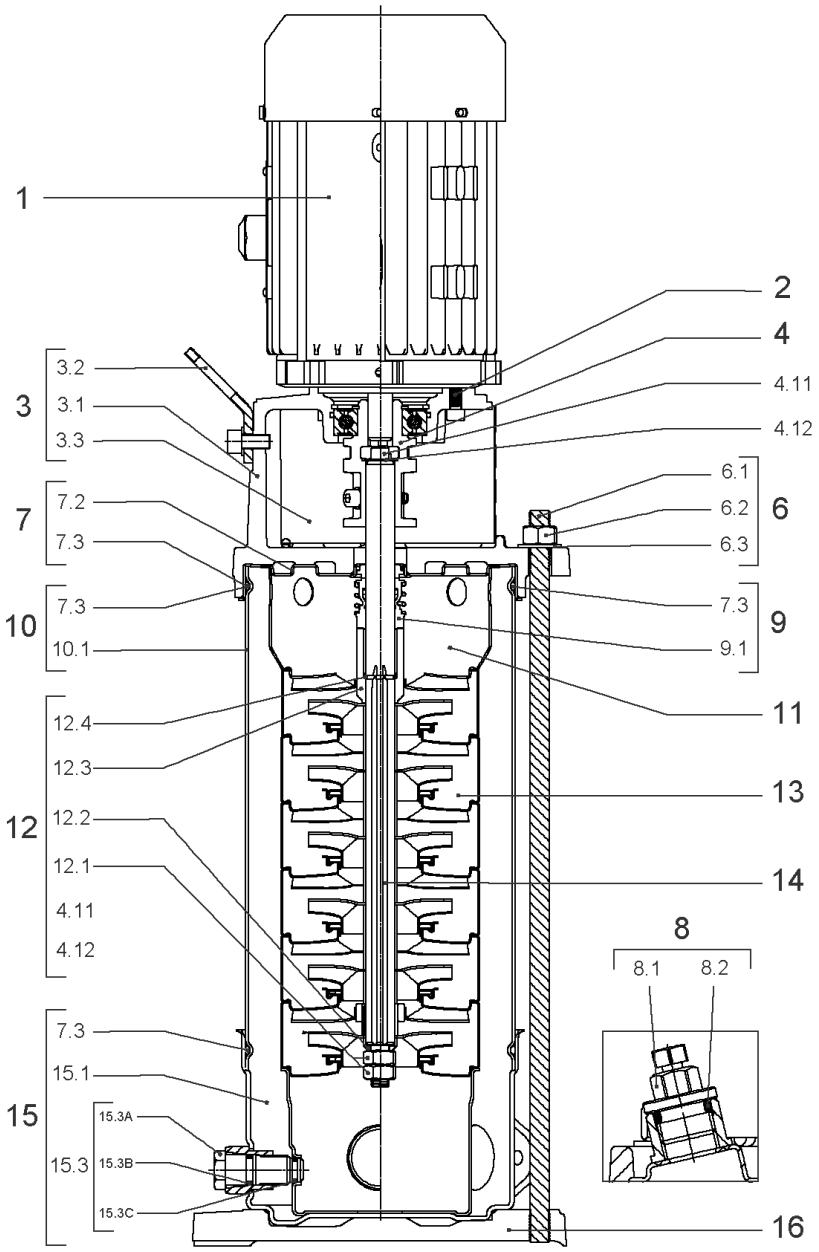
1
2
4
4.11
4.12
3
3.2
3.1
3.3
7
7.2
7.3
10
7.3
10.1
12
12.4
12.3
12.2
12.1
4.11
4.12
15
7.3
15.1
15.3
15.3A
15.3B
15.3C
6
6.1
6.2
6.3
9
7.3
9.1
11
13
14
8
8.1
8.2
16

## HELIX VE1603-3.0-1/16/E/S (4201559)

| Item | Article no. | Description | Quantity |
|---|---|---|---|
| 1 | | DRIVE HELIX-VE1603-3T-IE4-WE-KIT | 1 |
| Note: MOTOR BRAND WILO ELEC | | | |
| | | SPARE PARTS MOTOR:ON REQUEST | 1 |
| 2 | 4159707 | SCREW M8X30 (4 PIECES) | 1 |
| 3 | 4214473 | LANTERN FT130 HELIX KIT | 1 |
| 3.1 | | > LANT-MOT-VMI-ReDTC6"-FT130-MACHINED+CATA | 1 |
| 3.2 | 4184852 | > EYELET CPL.FT HELIX (2 PIECES) | 1 |
| 3.3 | 4213782 | > COUPLING PROTECTOR FT115/130 HELIX KIT | 1 |
| 4 | 4159710 | COUPLING D.16XD.28 FT130 HELIX KIT | 1 |
| 6 | 2127553 | STUD BOLT M12X341 KIT | 1 |
| 7 | 4214481 | STATIONARY RING HOLDER HELIX D27 ReDTC | 1 |
| 7.2 | 4214479 | > STATIONARY RING HOLDER HELIX D27 VP. | 1 |
| 7.3 | 4176513 | > O-RING FOR PUMP JACKET VP. | 1 |
| 8 | 4212724 | FILING/PURGING PLUG HELIX ReDTC KIT | 1 |
| 8.1 | | > FILLING PLUG MVI6"-304 | 1 |
| 8.2 | 4177800 | > O-RING EPDM PLUG HELIX VP. | 1 |
| 9 | 4214483 | MECH.SEAL HELIX6-10-16 O/E ReDTC KIT | 1 |
| 9.1 | 4177801 | > MECH.SEAL HELIX6-10-16 O/E VP. | 1 |
| 7.3 | 4176513 | > O-RING FOR PUMP JACKET VP. | 1 |
| 10 | 2127575 | HOUSING PIPE D.152x210 1.4301 KIT | 1 |
| 11 | 2127588 | CENTERING STAGE-RETURN HELIX16 1.4301 VP | 1 |
| 12 | 4214520 | SHAFT EQUIPMENT HELIX V16 ReDTC KIT | 1 |
| 12.1 | | > NUT-H-M10-A4.70 | 1 |
| 12.2 | | > SERRATED LOCK WASHER M+16M3-316L | 1 |
| 12.3 | | > 1/2-SNAP-RING-16M3-316L | 1 |
| 12.4 | | > STOP-RUSH-1/2-D16xd2-M+316 | 1 |
| 4.11 | | > SCREW CHC-M6X14-8.8-ISO4762-GEOMET500A | 1 |
| 4.12 | | > WASHER D.24 L6U ZINK | 1 |
| 13 | | HYDRAULIC HELIX V 1603 1.4307 | 1 |
| 14 | 4214495 | SHAFT D.16X278 HELIX 1.4057 VP. | 1 |
| 15 | 4217899 | PUMP HOUSING HELIX DN50 PN16 1.4301 KIT | 1 |
| 7.3 | 4176513 | > O-RING FOR PUMP JACKET VP. | 1 |
| 15.1 | | > BLASTING PPE HOUSING V-PN16-DN50-304 | 1 |
| 15.2 | 4217895 | > COUNTER FLANGE-G2"-PN16-GJL KIT | 1 |

| Item | Article no. | Description | Quantity |
|---|---|---|---|
| 15.3 | 4171321 | > PRIMING/DRAIN PLUG EPDM HELIX KIT | 1 |
| 16 | 2127601 | BASEPLATE HELIX V16 VP. | 1 |

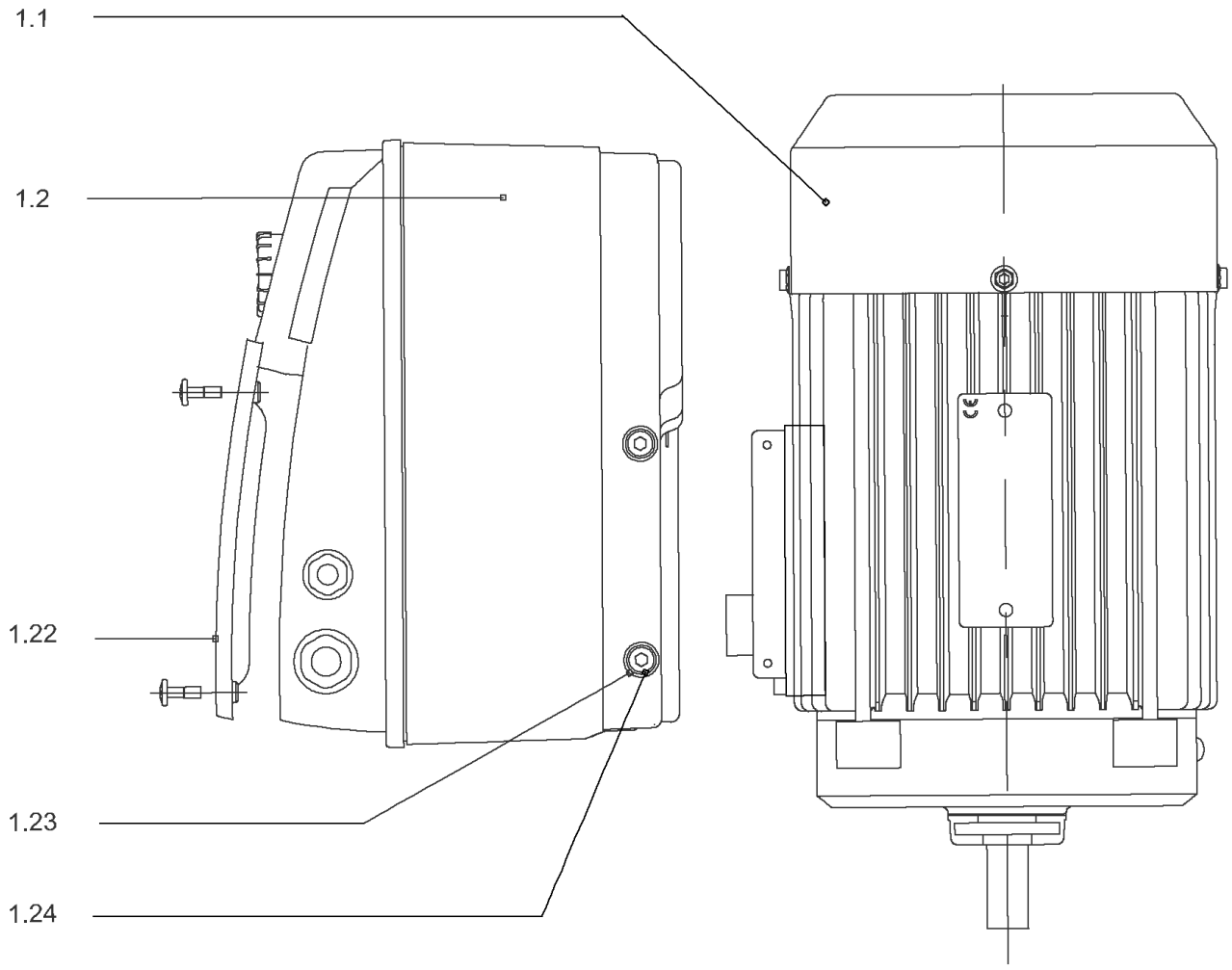
1.1
1.2
1.22
1.23
1.24

## DRIVE HELIX-VE1603-3T-IE4-WE-KIT

| Item | Article no. | Description | Quantity |
|---|---|---|---|
| 1.1 | 4207922 | MOTOR 3/2/100 3~ 380V 60HZ IE4 WE VP. | 1 |
| | | SPARE PARTS MOTOR:ON REQUEST | 1 |
| 1.2 | 4209340 | MODULE HELIX-VE1603-3.0-IE4-WE KIT | 1 |
| 1.22 | 2054227 | > MODULE COVER/GASKET TL3/4 KIT | 1 |
| 1.23 | 4215716 | > SCREW M5X16 DIN912 8.8 A2A (4pieces) VP. | 1 |
| 1.24 | 2057978 | > RONDELLE A5,3 DIN6797 FST ZN (4 PIECES) | 1 |

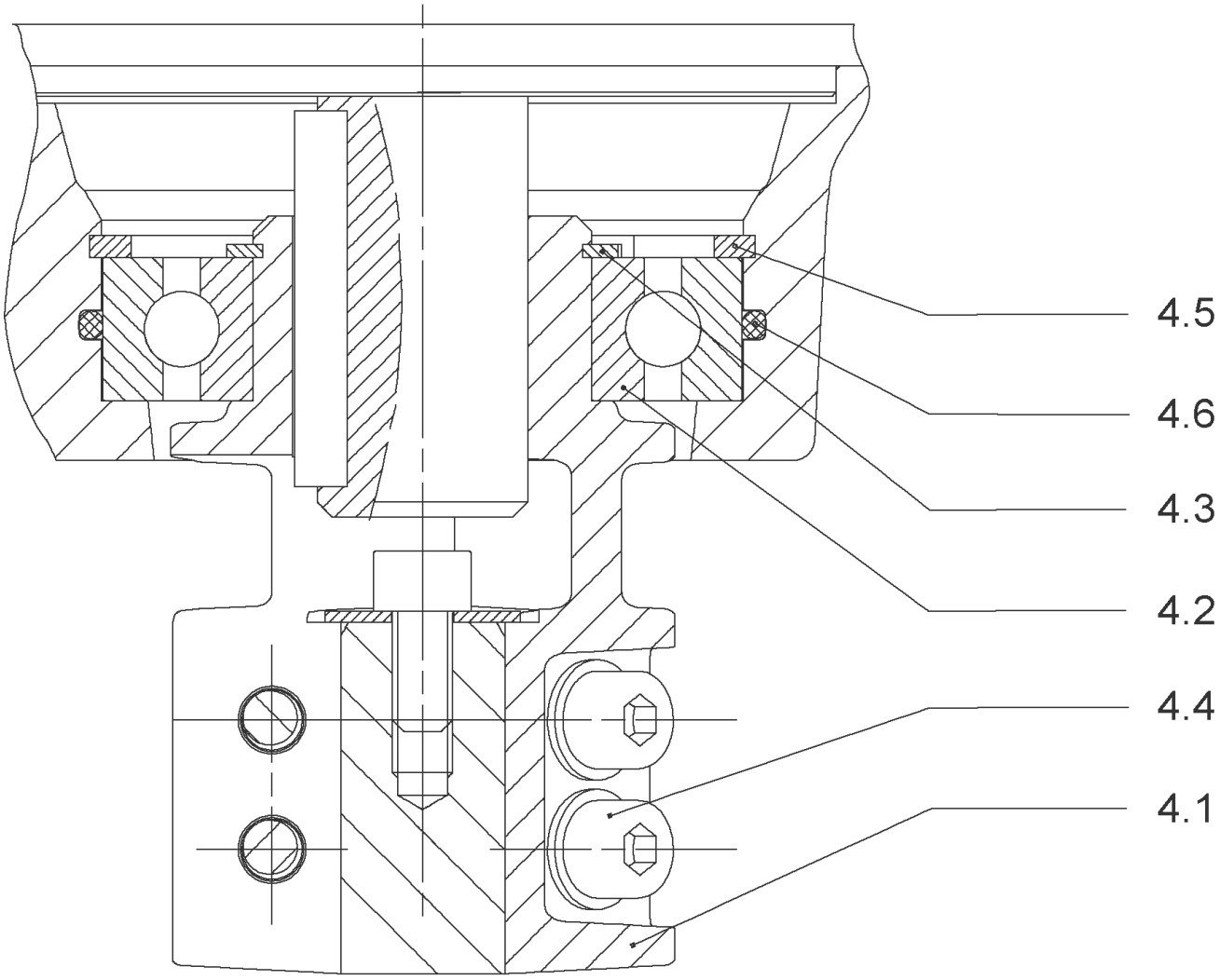
4.5
4.6
4.3
4.2
4.4
4.1

## COUPLING D.16XD.28 FT130 HELIX KIT (4159710)

| Item | Article no. | Description | Quantity |
|---|---|---|---|
| 4.1 | | COUPLING M+ Ø16XØ28 FT130 MACHINED | 1 |
| 4.2 | 2131022 | BALL BEARING 6209/ZZ-C3(HT)VP. | 1 |
| 4.3 | 4233930 | CIRCLIP-FOR-BORES-D45x1,75 VP. | 1 |
| 4.4 | 4157726 | SCREW KIT M8X30 (4 PIECES) | 1 |
| 4.5 | 4234252 | CIRCLIPS 85X3 VP. | 1 |
| 4.6 | 4234243 | O-RING 85X3 VP. | 1 |
| | | NOMEL CONTACT WASHER 8x16x1,4 STEEL ZC | 1 |

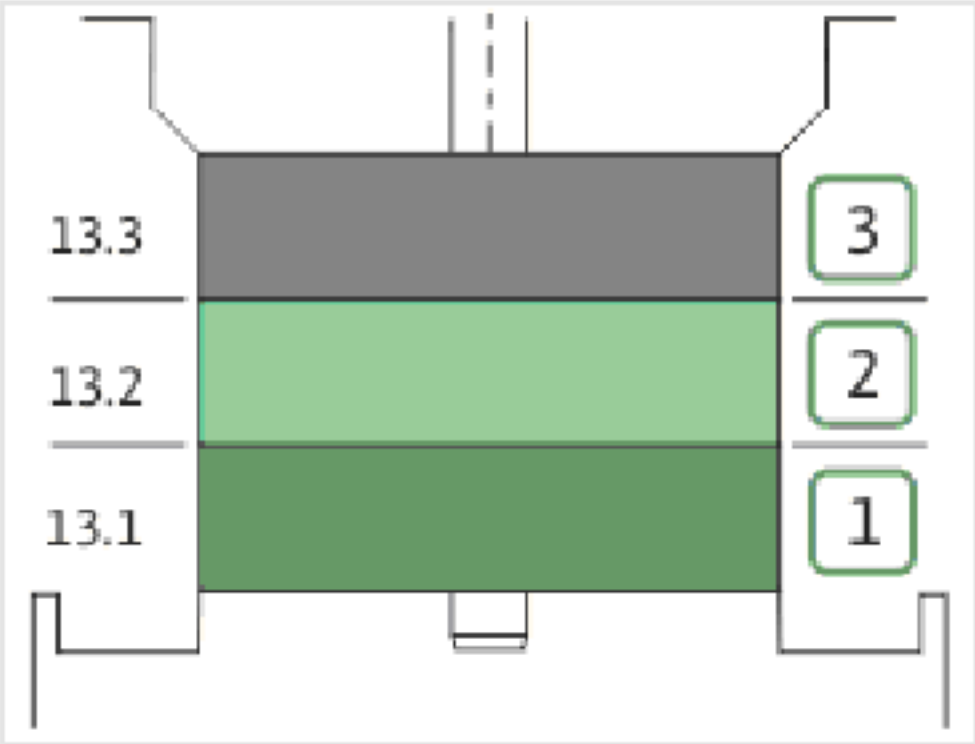
13.3
13.2
13.1
3
2
1

| Item | Article no. | Description | Quantity |
|---|---|---|---|
| 13.1 | 4159720 | STAGE HELIX 16 1.4301 KIT | 1 |
| | | > MACH.STG-CASING-WOGV-WNR-M+16-304 | 1 |
| | | > IMPELLER-M+16-304 | 1 |
| 13.2 | 4159714 | STAGE BEARING HELIX 16 1.4301 KIT | 1 |
| | | > MACH.BEARING-STG-CASING-WNR-M+16-304 | 1 |
| | | > IMPELLER-M+16-304 | 1 |
| | | > SLEEVE-SPACER-Ø19,35x30,665-304 | 1 |
| | | > SHAFT-SLEEVE-D16xD20x18-CW | 1 |
| 13.3 | 4159715 | INTERMEDIATE STAGE HELIX 16 1.4301 KIT | 1 |
| | | > CORPS-ETG-STD-ACR-AJR-USIN.M+16-304 | 1 |
| | | > IMPELLER-M+16-304 | 1 |
| | | > SPACER Ø16X19.4-L48.6-304 | 1 |

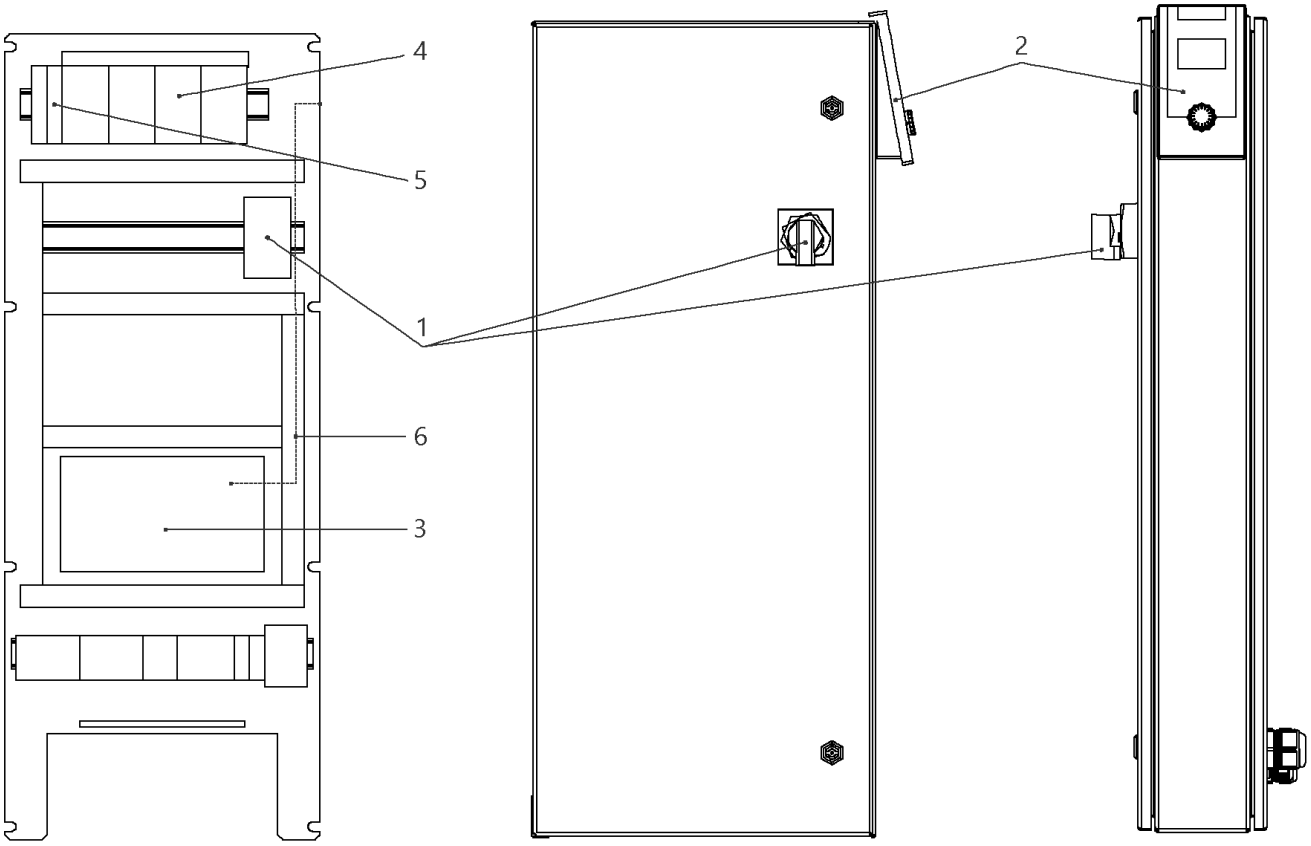
4
5
1
6
3
2

## W-CTRL-SCE-B-3x4,0KW-T4-FM-ND2

| Item | Article no. | Description | Quantity |
|---|---|---|---|
| 1 | 2104473 | MAIN SWITCH OT63F3 L105 KIT | 1 |
| 2 | 4184784 | CONTROL PANEL HMI SC KIT | 1 |
| 2 | 4185259 | ASSEMBLY DISPLAY SC PKG VP. | 1 |
| 3 | 4185257 | ASSEMBLY CPU SCe Booster VP. | 1 |
| 4 | 2051217 | AUTOM.CIRCUIT BREAKER S203 B16 TO7,5kW | 1 |
| 5 | 2046288 | CIRCUIT BREAKER S201 B16 | 1 |
| 6 | 4194956 | PATCH CABLE RJ45 CAT6 1,0M BLUE SC-PANEL | 1 |

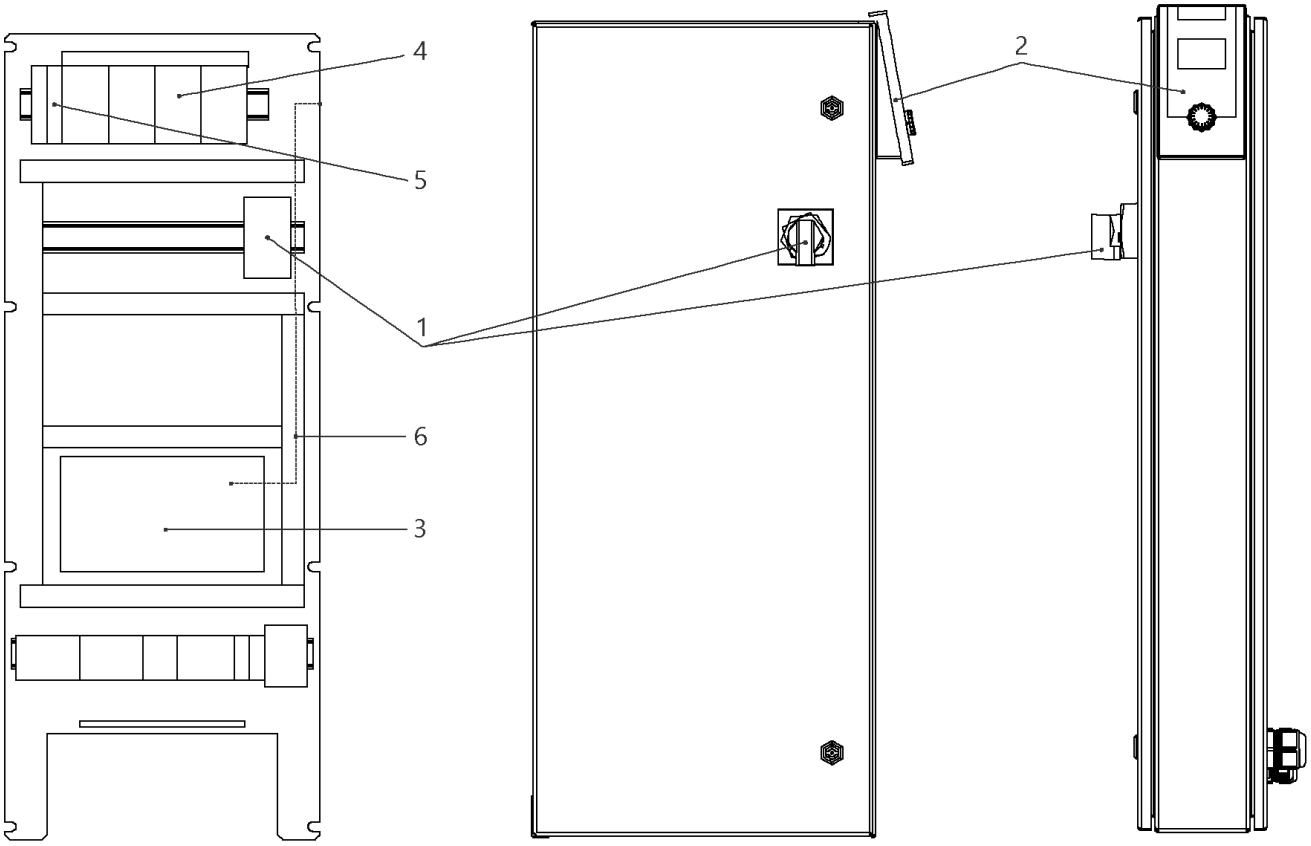
4
5
1
6
3
2

## W-CTRL-SCE-B-3x13A-T34-FM-ND2-AVC-PKG (2541906)

| Item | Article no. | Description | Quantity |
|---|---|---|---|
| 1 | 2104473 | MAIN SWITCH OT63F3 L105 KIT | 1 |
| 2 | 4184784 | CONTROL PANEL HMI SC KIT | 1 |
| 2 | 4185259 | ASSEMBLY DISPLAY SC PKG VP. | 1 |
| Note: DISPLAY ALONE / PLATINE SEULE | | | |
| 3 | 4185257 | ASSEMBLY CPU SCe Booster VP. | 1 |
| 4 | 2051217 | AUTOM.CIRCUIT BREAKER S203 B16 TO7,5kW | 1 |
| 5 | 2046288 | CIRCUIT BREAKER S201 B16 | 1 |
| 6 | 4194956 | PATCH CABLE RJ45 CAT6 1,0M BLUE SC-PANEL | 1 |

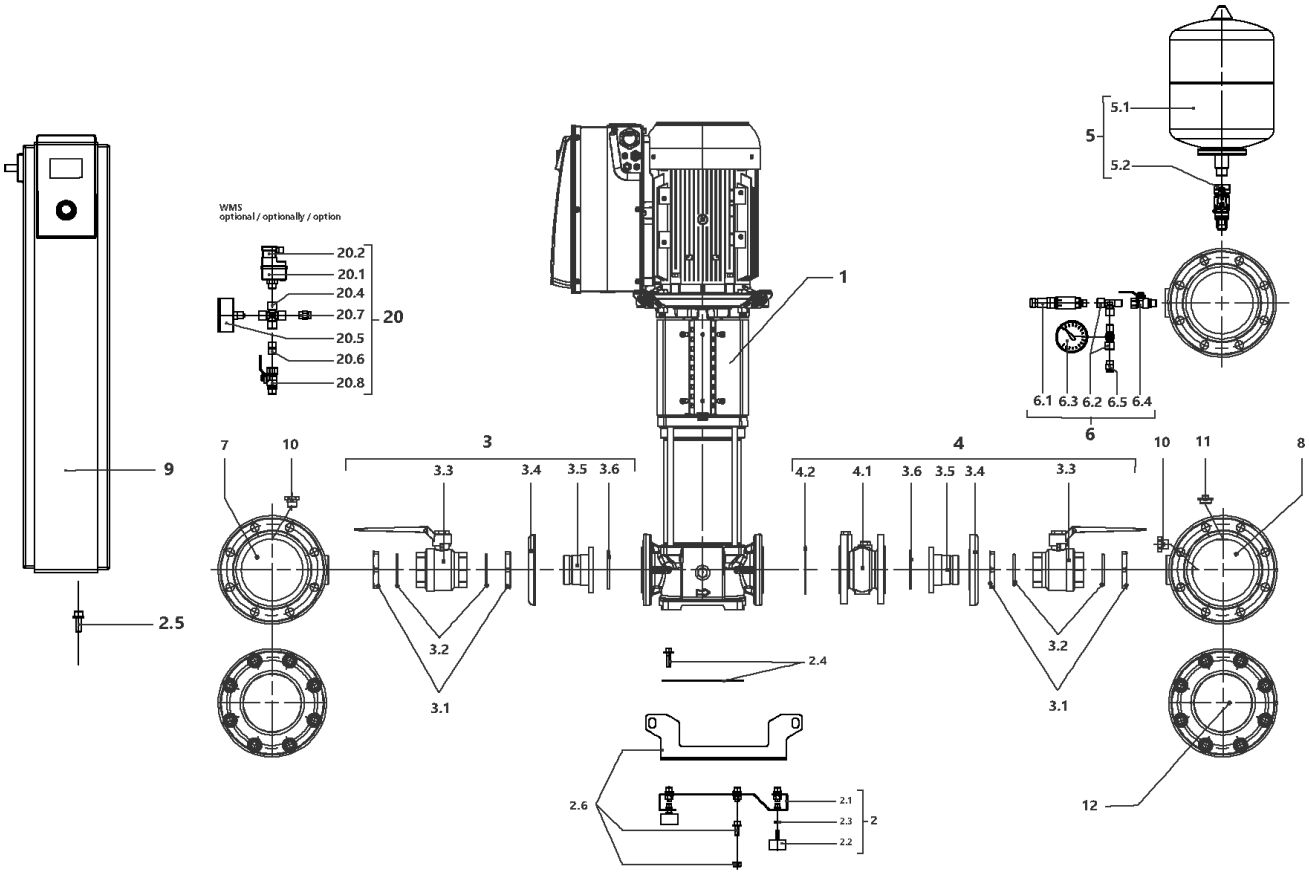
WMS
optional / optionally / option
20.2
20.1
20.4
20.7
20.5
20.6
20.8
20
1
5.1
5
5.2
6.1 6.3 6.2 6.5 6.4
6
9
7
10
3
3.3
3.4
3.5 3.6
4.2
4.1
3.6 3.5 3.4
4
10
11
8
2.5
3.2
3.1
2.4
2.6
2.1
2.3
2.2
2
12

## SiBoost Smart 3HELIX VE2202/4kW (2540905)

| Item | Article no. | Description | Quantity |
|---|---|---|---|
| 1 | | HELIX VE2202-4.0-4/16/E/S | 1 |
| 2 | 4203986 | BASE PLATE DE3 1150x420 M10 KIT | 1 |
| 2.1 | | > BASEPLATE_3x4/6/10/16V_E300_BOX_150 | 1 |
| 2.2 | 2027881 | > VIBRATION DAMPER M.10X20 D.70 | 1 |
| 2.3 | 2028281 | > NUT M10 DIN936 (ISO4035) 17H VZ | 1 |
| 2.4 | 4203978 | > HOLDER PUMP Siboost Helix 22 KIT | 1 |
| 2.5 | 4197084 | > HOLDER SWITCHBOX WILO Smart Control KIT | 1 |
| 2.6 | 4203979 | > LIFTING Siboost HELIX 22/36 KIT | 1 |
| 3 | 4203980 | SUCTION SIDE Siboost Helix 22 KIT | 1 |
| 3.1 | 2028689 | > NUT G2"X14 RG | 1 |
| 3.2 | 2028690 | > O-RING ID.53,35X5,33 EP851 | 1 |
| 3.2 | 2663977 | > BALL VALVE TYP250W IG.2" PN35 GIACOMINI | 1 |
| 3.4 | 2028285 | > LAPPED FLANGE DN50 1.4301 DIN2642P | 1 |
| 3.5 | 4203981 | > UNION INSERT DN50-G2" FLANGE AISI304 VP. | 1 |
| 3.6 | 2029911 | > O-RING ID.69,2X5,33 EPDM 70 SHR | 1 |
| 4 | 4203982 | DELIVERY SIDE Siboost Helix 22 KIT | 1 |
| 3.1 | 2028689 | > NUT G2"X14 RG | 1 |
| 3.2 | 2028690 | > O-RING ID.53,35X5,33 EP851 | 1 |
| 3.3 | 2663977 | > BALL VALVE TYP250W IG.2" PN35 GIACOMINI | 1 |
| 3.4 | 2028285 | > LAPPED FLANGE DN50 1.4301 DIN2642P | 1 |
| 3.5 | 4203981 | > UNION INSERT DN50-G2" FLANGE AISI304 VP. | 1 |
| 3.6 | 2029911 | > O-RING ID.69,2X5,33 EPDM 70 SHR | 1 |
| 4.1 | 2118590 | > NON RETURN VALVE DN50 PN16 VP. | 1 |
| 4.2 | 4202854 | > Flat gasket D61x107x2_DN50_PN25_FIBER VP | 1 |
| 5 | 4203983 | DIAPHREM TANK 8L/PN16 DIN4807/T5 KIT | 1 |
| 5.1 | 2045914 | > DIAPHREM TANK 8L TYP-DD 16BAR | 1 |
| 5.2 | 4189350 | > FLOW FITTING G3/4 FOR DIAPHRAG VESSEL VP | 1 |
| 6 | 4197076 | PRESSURE SENSOR/ GAUGE 0-16BAR KIT | 1 |
| 6.1 | 2085909 | > PRESS.SENSOR 1/4" 0-16BAR 4-20MA VP. | 1 |
| 6.2 | 4197077 | > T-PIECE 1/4" VP. | 1 |
| 6.3 | 2028692 | > PRESSURE GAUGE NG63-PN16-G1/4 | 1 |
| 6.4 | 2028291 | > BALL TAP R1/4" PN42 GIACOMINI R254DL | 1 |
| 6.5 | 2028691 | > BLOWGUN 1/4" MS 30BAR VP. | 1 |
| 7 | 4203987 | PIPE DE3 DN100-3x2"+2x1/4x900 VP. | 1 |

| Item | Article no. | Description | Quantity |
|---|---|---|---|
| 8 | 4203988 | PIPE DE3 DN100-3x2"+2x1/4+1x3/4x900 VP. | 1 |
| 9 | | W-CTRL-SCE-B-3x13A-T34-FM-ND2-AVC-PKG | 1 |
| 10 | 4197079 | PLUG G1/4"x10 AISI304 KIT | 1 |
| 11 | 2032654 | PLUG R3/4" MS VIEGA 1751 | 1 |
| 12 | 4203989 | BLIND-FLANGE DN100 PN16 -1.4301 KIT | 1 |
| | 2094573 | > NUT M16 DIN934 A2 1.4301 VP. | 1 |
| | 2107590 | > SCREW M16x70 DIN933 A2 (8 PIECES) | 1 |
| | 2094572 | > WASHER A17 DIN125 A2 1.4301 VP. | 1 |
| | | > FULL FLANGE ST.DN100 PN16 EN1092-1/05 A2 | 1 |
| | | > FLANGE COVER DN100 DIN 3443 FORM A | 1 |
| | 2106342 | > FLAT GASKET D.120/162X2 DN100 C4430 VP. | 1 |
| 20 | | ASSEMBLY WMS. DE-EB. +VP | 1 |
| 20.1 | 2028652 | > PRESSURE SWITCH PS3-ASR 1/(1,3) VP. | 1 |
| 20.2 | 2130983 | > PLUG PS3-415 WITH KABEL 1,5M 2NO VP. | 1 |
| 20.4 | 2028290 | > CROSSPIECE R1/4" MS-NICKEL | 1 |
| 20.5 | 2028687 | > PRESSURE GAUGE NG63 R1/4" HI.0-6BAR | 1 |
| 20.6 | 2054268 | > DUAL NIPPLE G1/4" x G1/4" MS VP. | 1 |
| 20.7 | 2028691 | > BLOWGUN 1/4" MS 30BAR VP. | 1 |
| 20.8 | 2028291 | > BALL TAP R1/4" PN42 GIACOMINI R254DL | 1 |

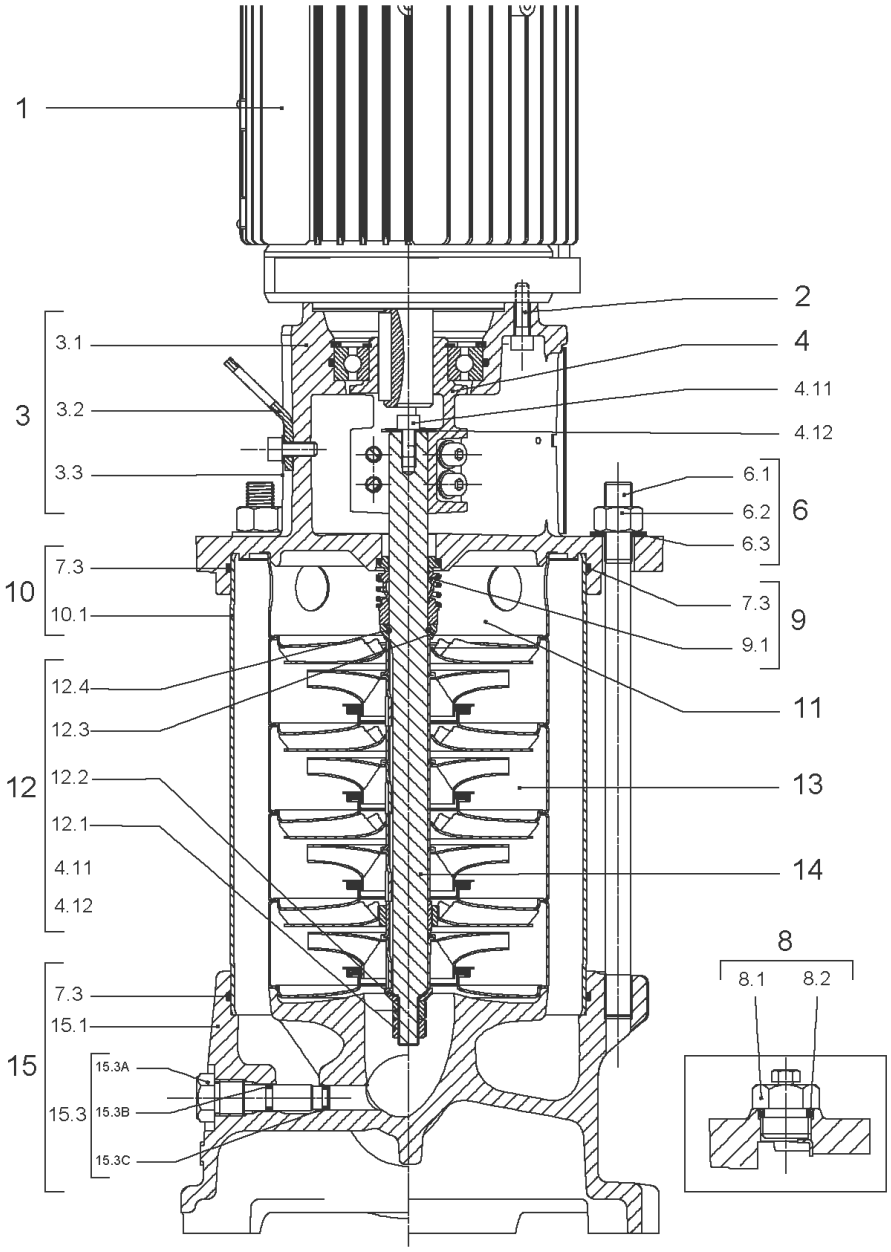
1
2
3.1
4
4.11
3
3.2
4.12
3.3
6.1
6.2
6
6.3
7.3
10
10.1
7.3
9
9.1
12.4
11
12.3
12
12.2
13
12.1
4.11
14
4.12
8
8.1
8.2
7.3
15.1
15
15.3A
15.3
15.3B
15.3C

| Item | Article no. | Description | Quantity |
|---|---|---|---|
| 1 | | DRIVE HELIX-VE2202-4.0-WE KIT | 1 |
| Note: MOTOR BRAND WILO ELEC | | | |
| 1 | | DRIVE HELIX-VE2202-IE2-ATB KIT | 1 |
| Note: MOTOR BRAND ATB | | | |
| 1 | | DRIVE HELIX-VE2202-4.0-IE4-WE KIT | 1 |
| Note: MOTOR BRAND WILO ELEC | | | |
| 2 | 4159707 | SCREW M8X30 (4 PIECES) | 1 |
| 3 | 4186356 | LANTERN HELIX OPTI 8" FT130 KIT | 1 |
| 3.1 | | > M+8_LANTERN_ONE-PIECE_FT130_CATA_DWA | 1 |
| 3.2 | 4184852 | > EYELET CPL.FT HELIX (2 PIECES) | 1 |
| 3.3 | 4184853 | > COUPLING PROTECTOR FT HELIX 8'' KIT | 1 |
| 4 | 4184854 | COUPLING D.22XD.28 FT130 HELIX KIT | 1 |
| 6 | 4179563 | STUD BOLT M16X198 KIT | 1 |
| 6.1 | | > TIE BOLT M16-198x24x44-1.4057 | 1 |
| 6.2 | 4179562 | > NUT M16 8.8 ISO4032 (4 PIECES) | 1 |
| 6.3 | 4097852 | > WASHER-CS-16.4-32-2.8-NFE25-511-A2 | 1 |
| 8 | 4186377 | FILING/PURGING PLUG 304 HELIX KIT | 1 |
| 8.1 | | > FILLING/VENTING-PLUG-MVI8/10"-304 | 1 |
| 8.2 | 4032291 | > O-RING 17x3 EPDM KTW/WRC | 1 |
| 9 | 4192148 | SEAL-KIT-HELIX22-36-52 FIRST O/E | 1 |
| 7.3 | 4179571 | > O-RING HOUSING PIPE HELIX22/36/52 VP. | 1 |
| 9.1 | 4179573 | > M.SEAL.HELIX22-36-52 O/E VP. | 1 |
| 10 | 4181154 | HOUSING PIPE D.204X164 1.4307 KIT | 1 |
| 7.3 | 4179571 | > O-RING HOUSING PIPE HELIX22/36/52 VP. | 1 |
| 10.1 | | > HOUSING-PIPE Ø204-M+2201/2202-304 | 1 |
| 11 | 4179143 | CENTERING STAGE-RETURN HELIX22 1.4307 VP | 1 |
| 12 | 4184856 | SHAFT EQUIPMENT HELIX 22 FIRST KIT | 1 |
| 13 | | HYDRAULIC HELIX V 2202 | 1 |
| 14 | 4184857 | SHAFT D.22X251 1.4057 VP. | 1 |
| 15 | 4186357 | EQUIPED HOUSING HELIX OPTI DN50 GJL KIT | 1 |
| 15.1 | | > PUMP CASING MONO.GJL M+8" DN50 DWA | 1 |
| 15.3 | 4106048 | > DRAIN/PRIMING PLUG EPDM HELIX FIRST KIT | 1 |
| 15.3A | | >> DRAIN AND PRIMING PLUG-VMI10"-304 | 1 |
| 15.3B | 4032293 | >> O-RING-10x3-EPDM-KTW/WRC | 1 |

| Item | Article no. | Description | Quantity |
|---|---|---|---|
| 15.3C | 4233957 | >> O-RING ID.9 EPDM VP. | 1 |
| 7.3 | 4179571 | > O-RING HOUSING PIPE HELIX22/36/52 VP. | 1 |

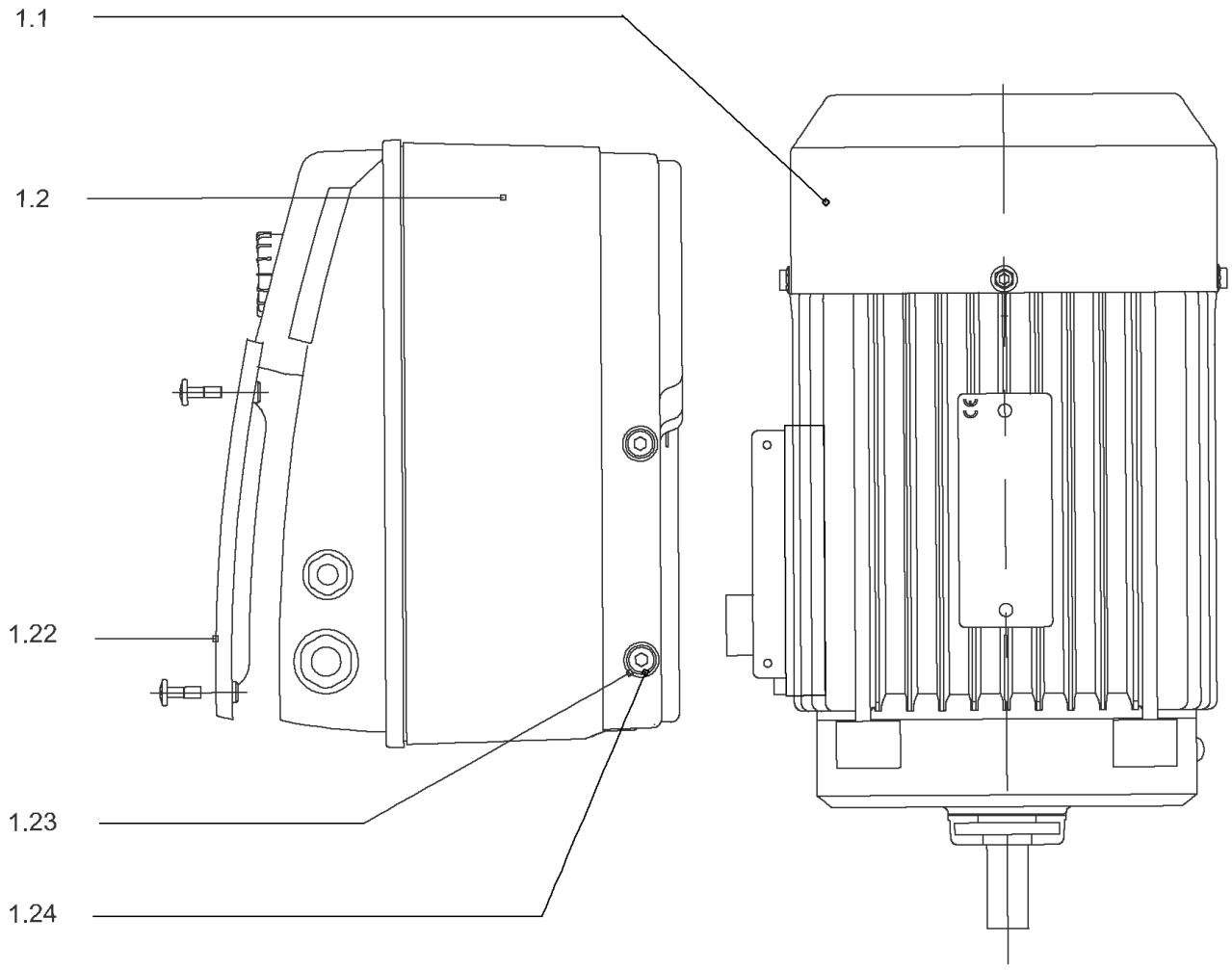
1.1
1.2
1.22
1.23
1.24

## DRIVE HELIX-VE2202-4.0-WE KIT

| Item | Article no. | Description | Quantity |
|---|---|---|---|
| 1.1 | 4188824 | MO.4/2/112 3~380V 60Hz IE2 WE VP. | 1 |
| | | SPARE PARTS MOTOR:ON REQUEST | 1 |
| 1.2 | 4186409 | MODULE HELIX-VE2202-4.0-IE2-WE KIT | 1 |
| 1.22 | 2054227 | > MODULE COVER/GASKET TL3/4 KIT | 1 |
| 1.23 | 4215716 | > SCREW M5X16 DIN912 8.8 A2A (4pieces) VP. | 1 |
| 1.24 | 2057978 | > RONDELLE A5,3 DIN6797 FST ZN (4 PIECES) | 1 |

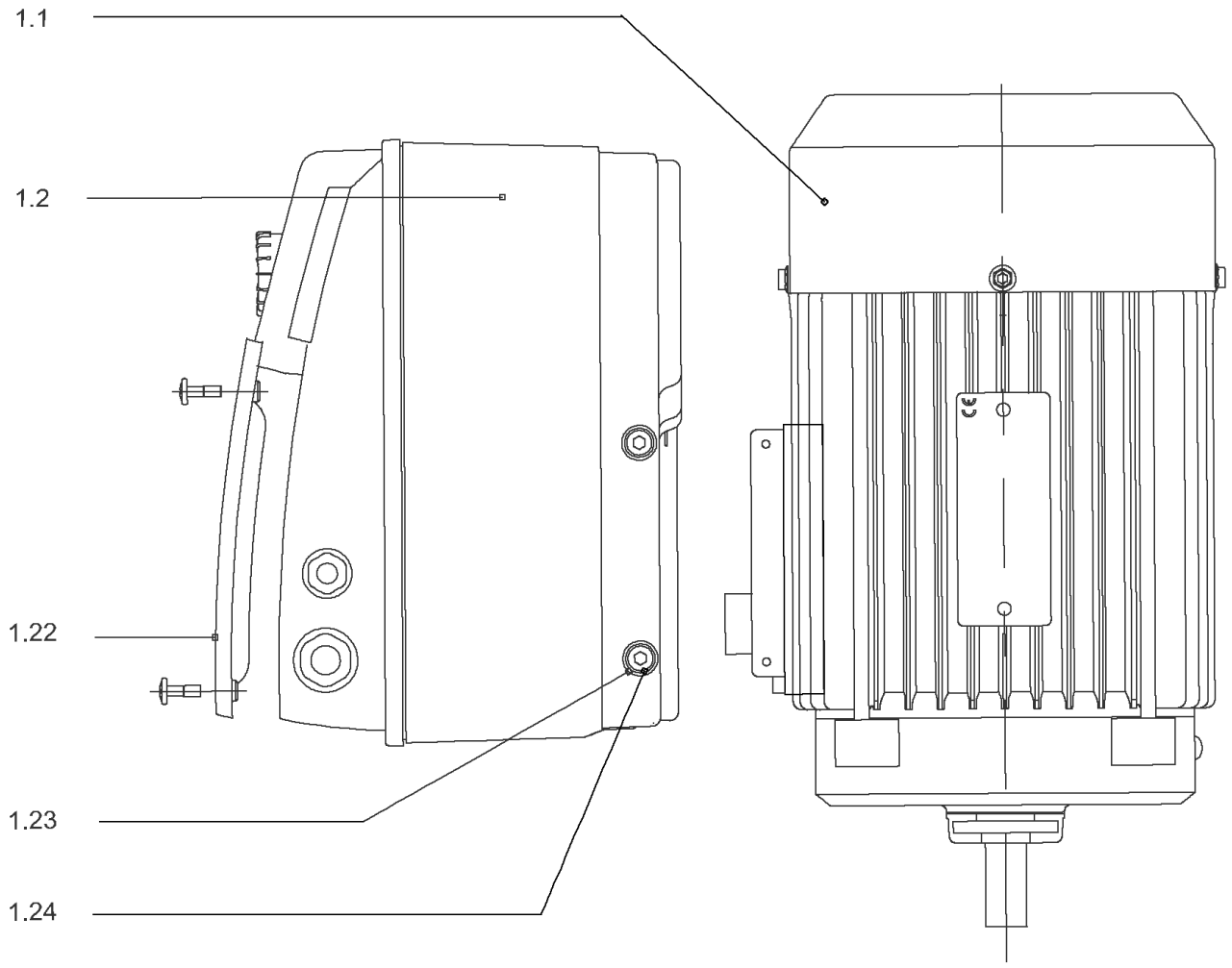
1.1
1.2
1.22
1.23
1.24

## DRIVE HELIX-VE2202-IE2-ATB KIT

| Item | Article no. | Description | Quantity |
|---|---|---|---|
| 1.1 | | MOTOR 4/2/112 3~ 380V 60HZ IE2 ATB VP. | 1 |
| Note: no longer available/nicht mehrlieferbar/n'est plus disponible | | | |
| | | SPARE PARTS MOTOR:ON REQUEST | 1 |
| 1.2 | 4185022 | MODULE HELIX-VE2202-4.0-IE2-ATB KIT | 1 |
| 1.22 | 2054227 | > MODULE COVER/GASKET TL3/4 KIT | 1 |
| 1.23 | 4215716 | > SCREW M5X16 DIN912 8.8 A2A (4pieces) VP. | 1 |
| 1.24 | 2057978 | > RONDELLE A5,3 DIN6797 FST ZN (4 PIECES) | 1 |

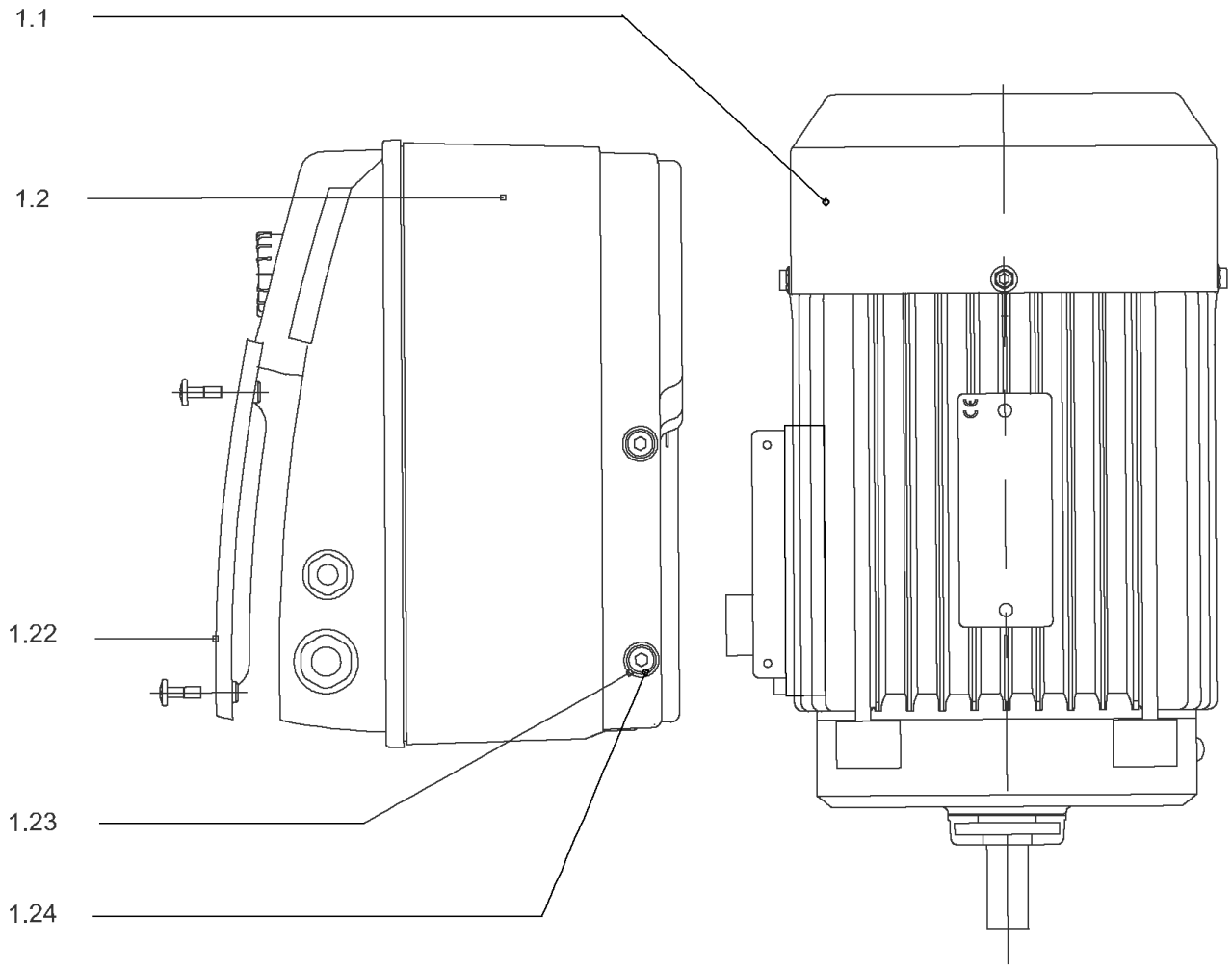
1.1
1.2
1.22
1.23
1.24

## DRIVE HELIX-VE2202-4.0-IE4-WE KIT

| Item | Article no. | Description | Quantity |
|---|---|---|---|
| 1.1 | 4207924 | MOTOR 4/2/112 3~ 380V 60HZ IE4 WE VP. | 1 |
| | | SPARE PARTS MOTOR:ON REQUEST | 1 |
| 1.2 | 4209608 | MODULE HELIX-VE2202-4.0-IE4-WE KIT | 1 |
| 1.22 | 2054227 | > MODULE COVER/GASKET TL3/4 KIT | 1 |
| 1.23 | 4215716 | > SCREW M5X16 DIN912 8.8 A2A (4pieces) VP. | 1 |
| 1.24 | 2057978 | > RONDELLE A5,3 DIN6797 FST ZN (4 PIECES) | 1 |

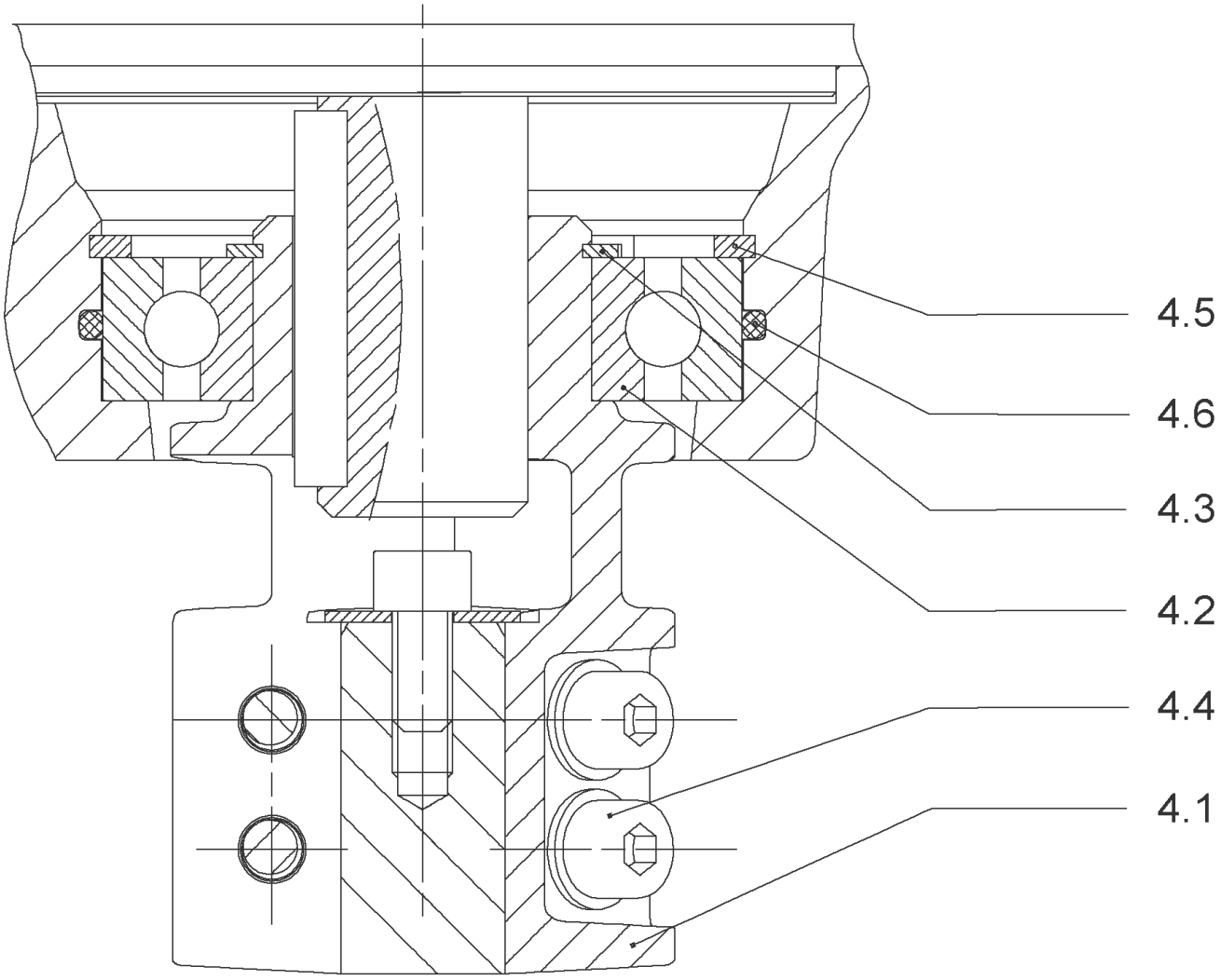
4.5
4.6
4.3
4.2
4.4
4.1

## COUPLING D.22XD.28 FT130 HELIX KIT (4184854)

| Item | Article no. | Description | Quantity |
|---|---|---|---|
| 4.1 | | COUPLING-VMI-Ø22xØ28-FT130-MACHINED | 1 |
| 4.2 | 2131022 | BALL BEARING 6209/ZZ-C3(HT)VP. | 1 |
| 4.3 | 4233930 | CIRCLIP-FOR-BORES-D45x1,75 VP. | 1 |
| 4.4 | 4157726 | SCREW KIT M8X30 (4 PIECES) | 1 |
| 4.5 | 4234252 | CIRCLIPS 85X3 VP. | 1 |
| 4.6 | 4234243 | O-RING 85X3 VP. | 1 |
| | | NOMEL CONTACT WASHER 8x16x1,4 STEEL ZC | 1 |

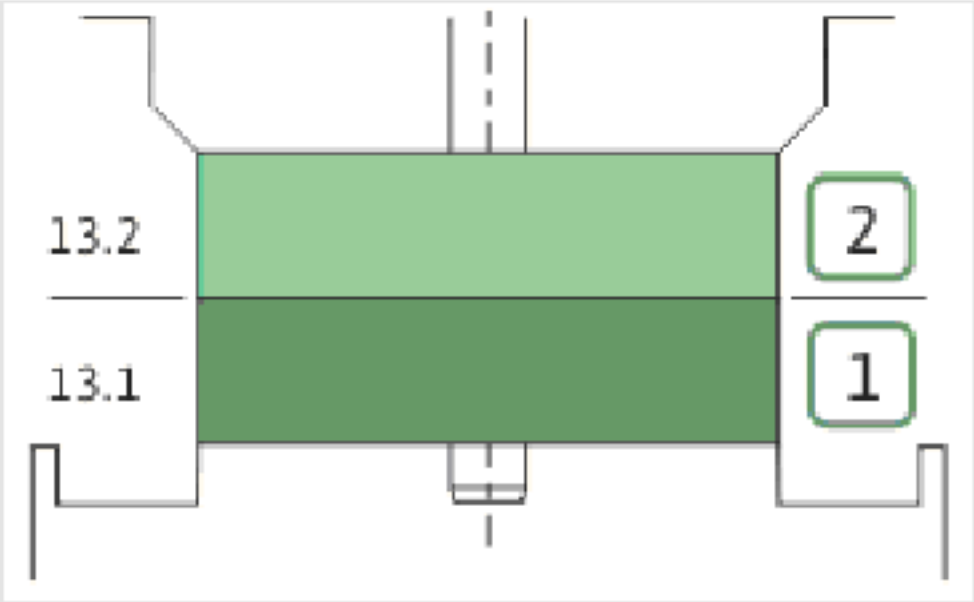
13.2
13.1
2
1

| Item | Article no. | Description | Quantity |
|---|---|---|---|
| 13.1 | 4157739 | FIRST STAGE HELIX 22 1.4307 KIT | 1 |
| | | > IMPELLER-H1-M+22-304 | 1 |
| | | > MACH.STG-CASING-WOGV-WNR-M+22-304 | 1 |
| 13.2 | 4157740 | BEARING STAGE HELIX 22 1.4307 KIT | 1 |
| | | > IMPELLER-H2-M+22-304 | 1 |
| | | > MACH.BEARING-STG-CASING-WNR-M+22-304 | 1 |
| | | > SHAFT-SLEEVE-D26xD22x16-CW | 1 |

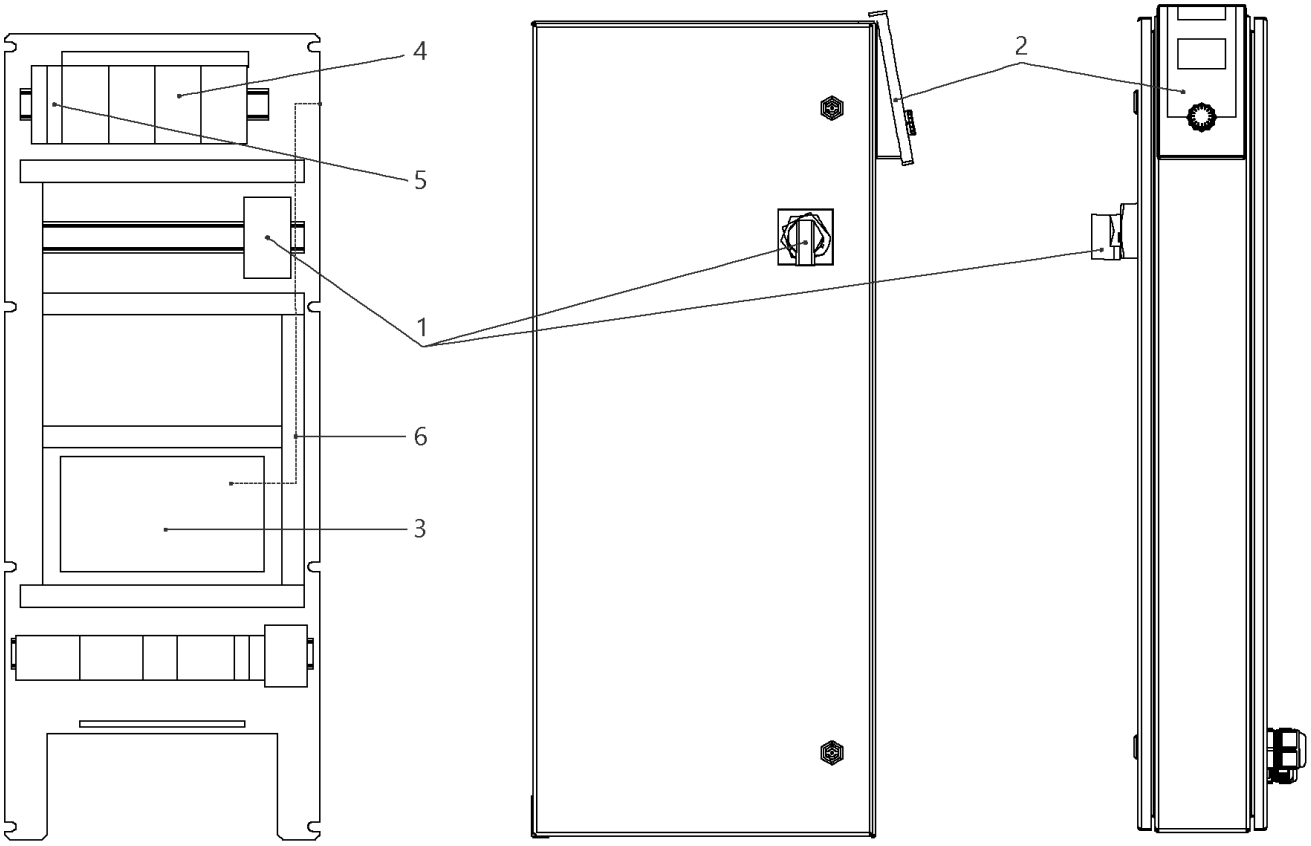
4
5
1
6
3
2

## W-CTRL-SCE-B-3x13A-T34-FM-ND2-AVC-PKG

| Item | Article no. | Description | Quantity |
|---|---|---|---|
| 1 | 2104473 | MAIN SWITCH OT63F3 L105 KIT | 1 |
| 2 | 4184784 | CONTROL PANEL HMI SC KIT | 1 |
| 2 | 4185259 | ASSEMBLY DISPLAY SC PKG VP. | 1 |
| Note: DISPLAY ALONE / PLATINE SEULE | | | |
| 3 | 4185257 | ASSEMBLY CPU SCe Booster VP. | 1 |
| 4 | 2051217 | AUTOM.CIRCUIT BREAKER S203 B16 TO7,5kW | 1 |
| 5 | 2046288 | CIRCUIT BREAKER S201 B16 | 1 |
| 6 | 4194956 | PATCH CABLE RJ45 CAT6 1,0M BLUE SC-PANEL | 1 |

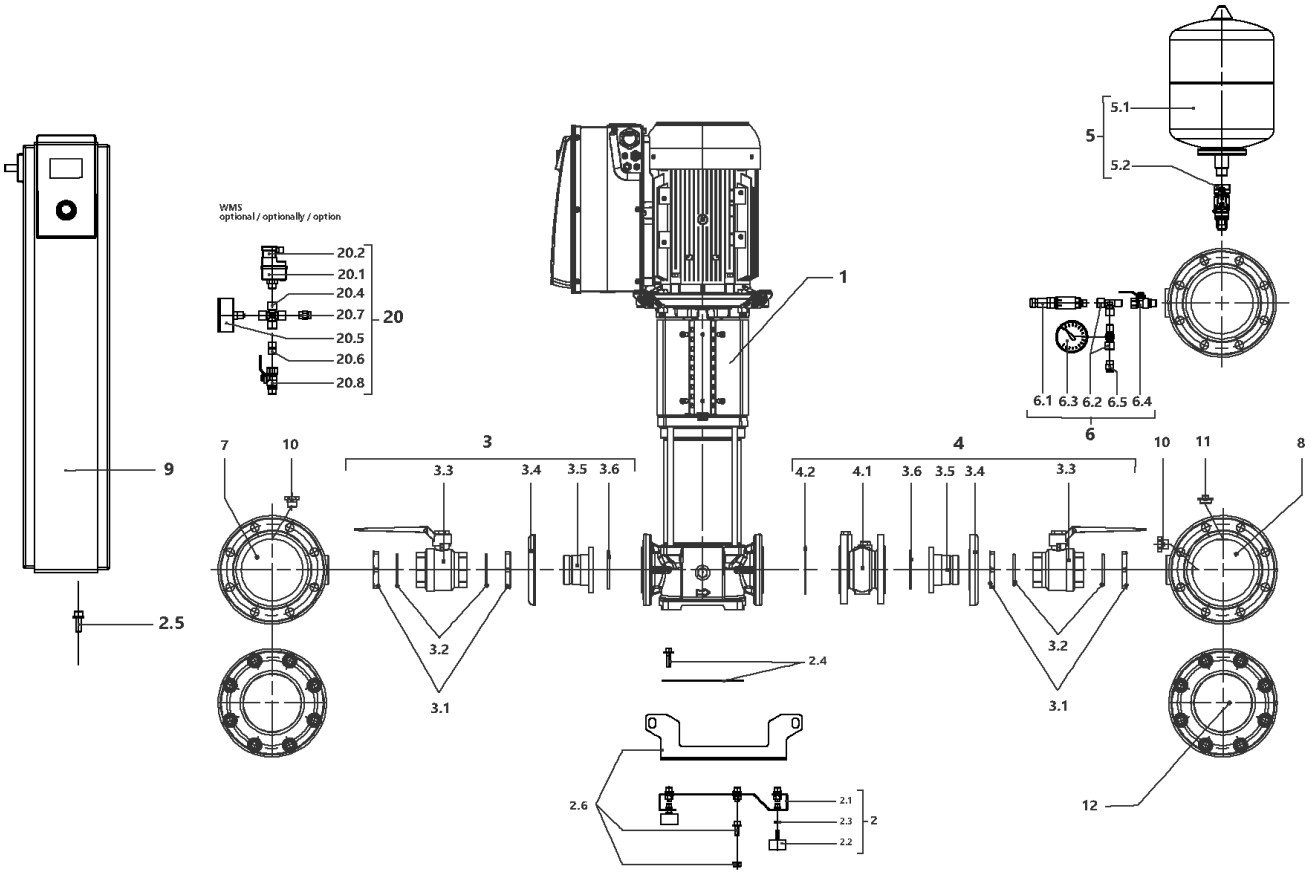
WMS
optional / optionally / option
20.2
20.1
20.4
20.7
20.5
20.6
20.8
20
1
5.1
5
5.2
6.1 6.3 6.2 6.5 6.4
6
9
7
10
3
3.3
3.4
3.5 3.6
4.2
4.1
3.6 3.5 3.4
4
10
11
8
2.5
3.2
3.1
2.4
2.6
2.1
2.3
2.2
2
12

## SiBoost Smart 3HELIX VE2203 (2540906)

| Item | Article no. | Description | Quantity |
|---|---|---|---|
| 1 | | HELIX VE2203-4/16/E/S-FF240 | 1 |
| 2 | 4203986 | BASE PLATE DE3 1150x420 M10 KIT | 1 |
| 2.1 | | > BASEPLATE_3x4/6/10/16V_E300_BOX_150 | 1 |
| 2.2 | 2027881 | > VIBRATION DAMPER M.10X20 D.70 | 1 |
| 2.3 | 2028281 | > NUT M10 DIN936 (ISO4035) 17H VZ | 1 |
| 2.4 | 4203978 | > HOLDER PUMP Siboost Helix 22 KIT | 1 |
| 2.5 | 4197084 | > HOLDER SWITCHBOX WILO Smart Control KIT | 1 |
| 2.6 | 4203979 | > LIFTING Siboost HELIX 22/36 KIT | 1 |
| 3 | 4203980 | SUCTION SIDE Siboost Helix 22 KIT | 1 |
| 3.1 | 2028689 | > NUT G2"X14 RG | 1 |
| 3.2 | 2028690 | > O-RING ID.53,35X5,33 EP851 | 1 |
| 3.2 | 2663977 | > BALL VALVE TYP250W IG.2" PN35 GIACOMINI | 1 |
| 3.4 | 2028285 | > LAPPED FLANGE DN50 1.4301 DIN2642P | 1 |
| 3.5 | 4203981 | > UNION INSERT DN50-G2" FLANGE AISI304 VP. | 1 |
| 3.6 | 2029911 | > O-RING ID.69,2X5,33 EPDM 70 SHR | 1 |
| 4 | 4203982 | DELIVERY SIDE Siboost Helix 22 KIT | 1 |
| 3.1 | 2028689 | > NUT G2"X14 RG | 1 |
| 3.2 | 2028690 | > O-RING ID.53,35X5,33 EP851 | 1 |
| 3.3 | 2663977 | > BALL VALVE TYP250W IG.2" PN35 GIACOMINI | 1 |
| 3.4 | 2028285 | > LAPPED FLANGE DN50 1.4301 DIN2642P | 1 |
| 3.5 | 4203981 | > UNION INSERT DN50-G2" FLANGE AISI304 VP. | 1 |
| 3.6 | 2029911 | > O-RING ID.69,2X5,33 EPDM 70 SHR | 1 |
| 4.1 | 2118590 | > NON RETURN VALVE DN50 PN16 VP. | 1 |
| 4.2 | 4202854 | > Flat gasket D61x107x2_DN50_PN25_FIBER VP | 1 |
| 5 | 4203983 | DIAPHREM TANK 8L/PN16 DIN4807/T5 KIT | 1 |
| 5.1 | 2045914 | > DIAPHREM TANK 8L TYP-DD 16BAR | 1 |
| 5.2 | 4189350 | > FLOW FITTING G3/4 FOR DIAPHRAG VESSEL VP | 1 |
| 6 | 4197076 | PRESSURE SENSOR/ GAUGE 0-16BAR KIT | 1 |
| 6.1 | 2085909 | > PRESS.SENSOR 1/4" 0-16BAR 4-20MA VP. | 1 |
| 6.2 | 4197077 | > T-PIECE 1/4" VP. | 1 |
| 6.3 | 2028692 | > PRESSURE GAUGE NG63-PN16-G1/4 | 1 |
| 6.4 | 2028291 | > BALL TAP R1/4" PN42 GIACOMINI R254DL | 1 |
| 6.5 | 2028691 | > BLOWGUN 1/4" MS 30BAR VP. | 1 |
| 7 | 4203987 | PIPE DE3 DN100-3x2"+2x1/4x900 VP. | 1 |

| Item | Article no. | Description | Quantity |
|---|---|---|---|
| 8 | 4203988 | PIPE DE3 DN100-3x2"+2x1/4+1x3/4x900 VP. | 1 |
| 9 | | W-CTRL-SCE-B-3x13A-T34-FM-ND2-AVC-PKG | 1 |
| 10 | 4197079 | PLUG G1/4"x10 AISI304 KIT | 1 |
| 11 | 2032654 | PLUG R3/4" MS VIEGA 1751 | 1 |
| 12 | 4203989 | BLIND-FLANGE DN100 PN16 -1.4301 KIT | 1 |
| | 2094573 | > NUT M16 DIN934 A2 1.4301 VP. | 1 |
| | 2107590 | > SCREW M16x70 DIN933 A2 (8 PIECES) | 1 |
| | 2094572 | > WASHER A17 DIN125 A2 1.4301 VP. | 1 |
| | | > FULL FLANGE ST.DN100 PN16 EN1092-1/05 A2 | 1 |
| | | > FLANGE COVER DN100 DIN 3443 FORM A | 1 |
| | 2106342 | > FLAT GASKET D.120/162X2 DN100 C4430 VP. | 1 |
| 20 | | ASSEMBLY WMS. DE-EB. +VP | 1 |
| 20.1 | 2028652 | > PRESSURE SWITCH PS3-ASR 1/(1,3) VP. | 1 |
| 20.2 | 2130983 | > PLUG PS3-415 WITH KABEL 1,5M 2NO VP. | 1 |
| 20.4 | 2028290 | > CROSSPIECE R1/4" MS-NICKEL | 1 |
| 20.5 | 2028687 | > PRESSURE GAUGE NG63 R1/4" HI.0-6BAR | 1 |
| 20.6 | 2054268 | > DUAL NIPPLE G1/4" x G1/4" MS VP. | 1 |
| 20.7 | 2028691 | > BLOWGUN 1/4" MS 30BAR VP. | 1 |
| 20.8 | 2028291 | > BALL TAP R1/4" PN42 GIACOMINI R254DL | 1 |

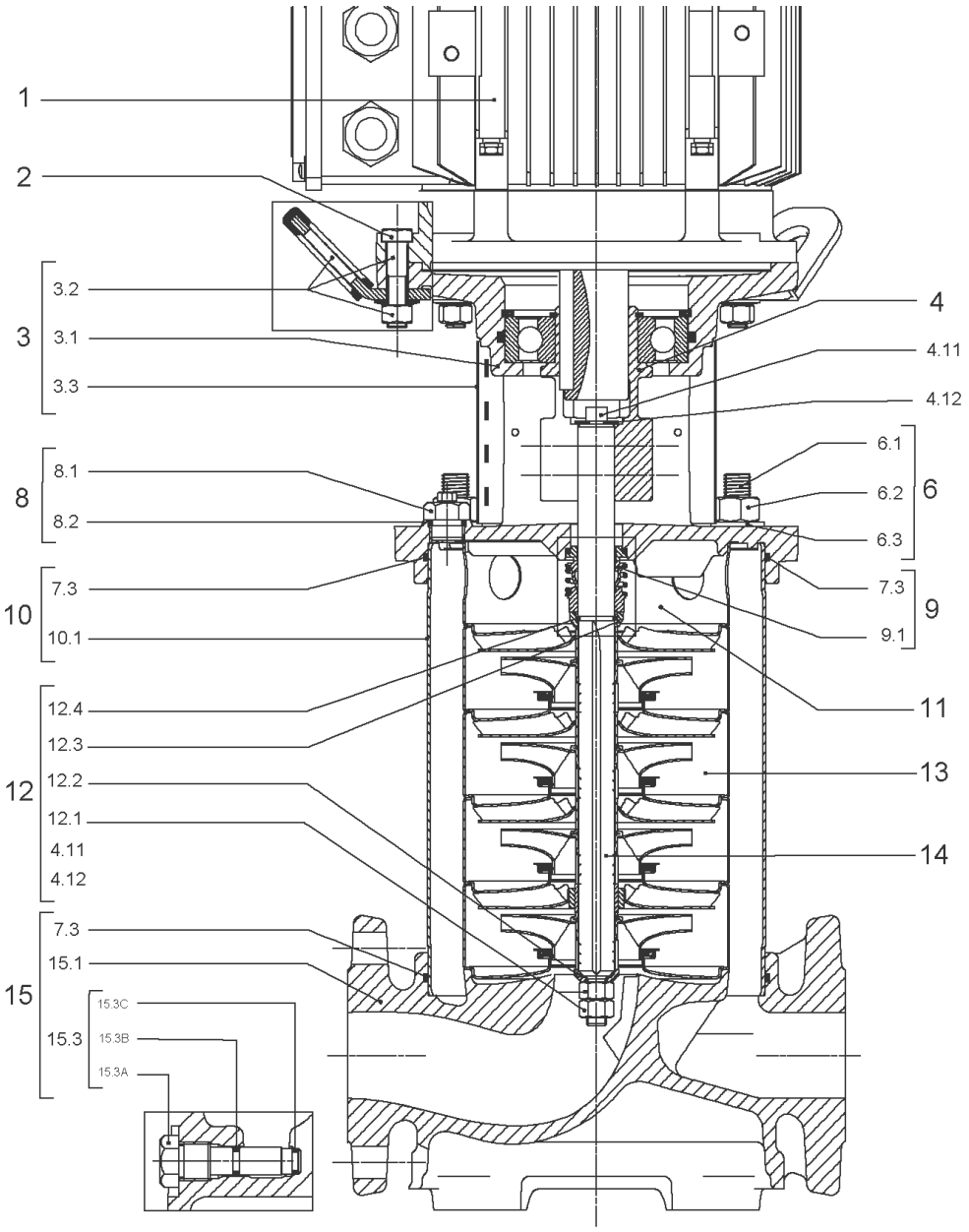
1
2
3
3.2
3.1
3.3
4
4.11
4.12
8
8.1
8.2
6
6.1
6.2
6.3
10
7.3
10.1
9
7.3
9.1
11
12
12.4
12.3
12.2
12.1
4.11
4.12
13
14
15
7.3
15.1
15.3
15.3C
15.3B
15.3A

| Item | Article no. | Description | Quantity |
|---|---|---|---|
| 1 | | DRIVE HELIX-VE2203-FF240-IE2-ATB KIT | 1 |
| Note: MOTOR BRAND ATB | | | |
| 1 | | DRIVE HELIX-VE2203-FF240-IE4-WE KIT | 1 |
| Note: MOTOR BRAND WILO ELEC | | | |
| | | SPARE PARTS MOTOR:ON REQUEST | 1 |
| 2 | 4174093 | SCREW M12X50 (4 PIECES) | 1 |
| 3 | 4186358 | LANTERN HELIX OPTI 8" FF240 KIT | 1 |
| 3.1 | | > M+8_LANTERN_ONE-PIECE_FF240_CATA_DWA | 1 |
| 3.2 | 4186346 | > EYELET CPL.FF240 HELIX (4 PIECES) | 1 |
| 3.3 | 4184853 | > COUPLING PROTECTOR FT HELIX 8'' KIT | 1 |
| 4 | 4186347 | COUPLING D.22XD.38 FF240T130 HELIX KIT | 1 |
| 6 | 4186342 | STUD BOLT M16X253 KIT | 1 |
| 6.1 | | > TIE BOLT M16-253x24x44-1.4057 | 1 |
| 6.2 | 4179562 | > NUT M16 8.8 ISO4032 (4 PIECES) | 1 |
| 6.3 | 4097852 | > WASHER-CS-16.4-32-2.8-NFE25-511-A2 | 1 |
| 8 | 4186377 | FILING/PURGING PLUG 304 HELIX KIT | 1 |
| 8.1 | | > FILLING/VENTING-PLUG-MVI8/10"-304 | 1 |
| 8.2 | 4032291 | > O-RING 17x3 EPDM KTW/WRC | 1 |
| 9 | 4192148 | SEAL-KIT-HELIX22-36-52 FIRST O/E | 1 |
| 7.3 | 4179571 | > O-RING HOUSING PIPE HELIX22/36/52 VP. | 1 |
| 9.1 | 4179573 | > M.SEAL.HELIX22-36-52 O/E VP. | 1 |
| 10 | 4181161 | HOUSING PIPE D.204X214 1.4307 KIT | 1 |
| 10.1 | | > HOUSING-PIPE Ø204-M+2203-304 | 1 |
| 7.3 | 4179571 | > O-RING HOUSING PIPE HELIX22/36/52 VP. | 1 |
| 11 | 4179143 | CENTERING STAGE-RETURN HELIX22 1.4307 VP | 1 |
| 12 | 4184856 | SHAFT EQUIPMENT HELIX 22 FIRST KIT | 1 |
| 13 | | HYDRAULIC HELIX V 2203 | 1 |
| 14 | 4186343 | SHAFT D.22X301 1.4057 VP. | 1 |
| 15 | 4186357 | EQUIPED HOUSING HELIX OPTI DN50 GJL KIT | 1 |
| 15.1 | | > PUMP CASING MONO.GJL M+8" DN50 DWA | 1 |
| 15.3 | 4106048 | > DRAIN/PRIMING PLUG EPDM HELIX FIRST KIT | 1 |
| 15.3A | | >> DRAIN AND PRIMING PLUG-VMI10"-304 | 1 |
| 15.3B | 4032293 | >> O-RING-10x3-EPDM-KTW/WRC | 1 |
| 15.3C | 4233957 | >> O-RING ID.9 EPDM VP. | 1 |

| Item | Article no. | Description | Quantity |
|---|---|---|---|
| 7.3 | 4179571 | > O-RING HOUSING PIPE HELIX22/36/52 VP. | 1 |

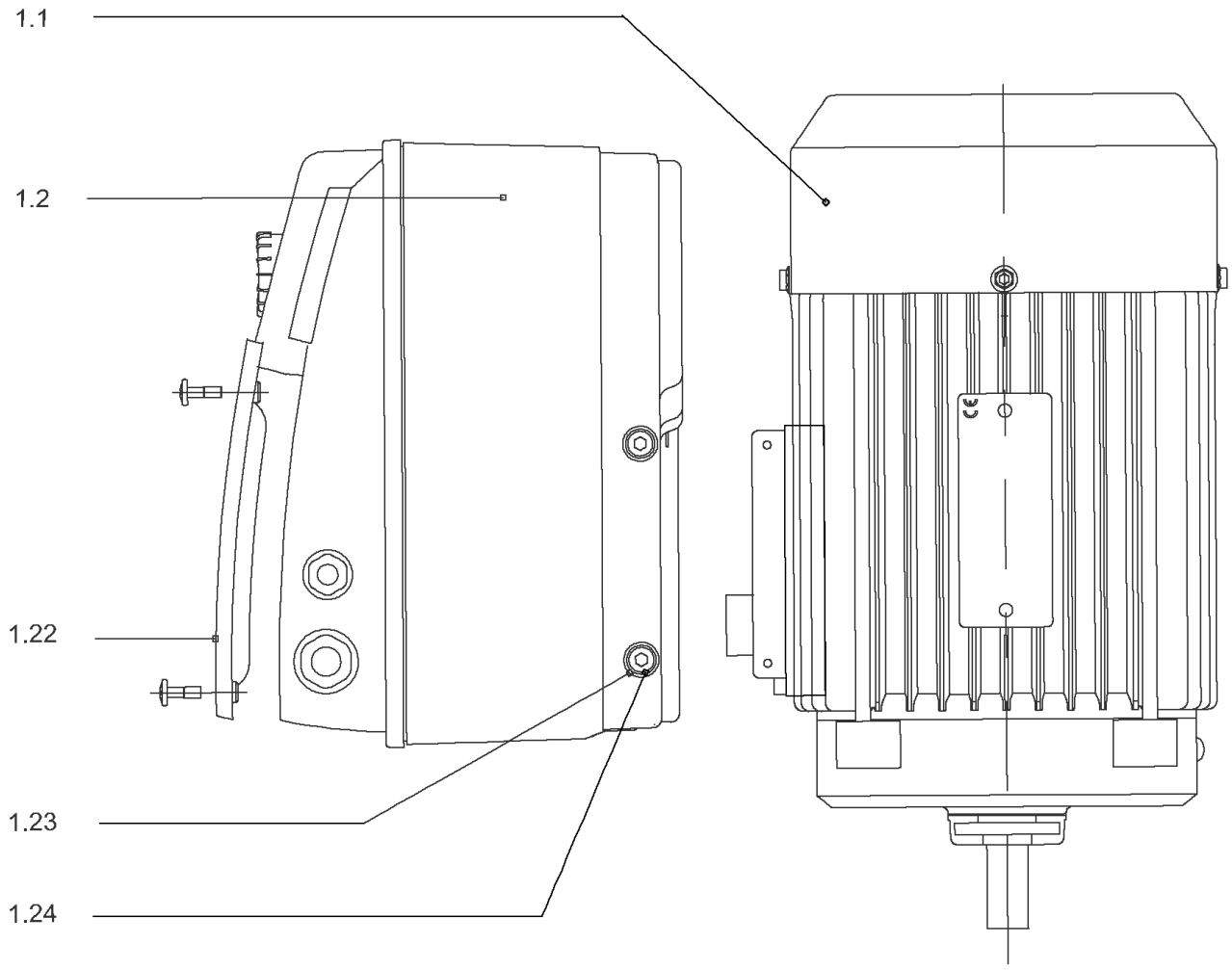
1.1
1.2
1.22
1.23
1.24

## DRIVE HELIX-VE2203-FF240-IE2-ATB KIT

| Item | Article no. | Description | Quantity |
|---|---|---|---|
| 1.1 | | MOTOR 5,5/2/132 FF240 3~380V 60HZ IE2 VP | 1 |
| Note: no longer available/nicht mehrlieferbar/n'est plus disponible | | | |
| | | SPARE PARTS MOTOR:ON REQUEST | 1 |
| 1.2 | 4186782 | MODULE HELIX-VE2203-IE2-ATB KIT | 1 |
| 1.22 | 2111344 | > MODULE COVER/GASKET TL5 KIT | 1 |
| 1.23 | 4215716 | > SCREW M5X16 DIN912 8.8 A2A (4pieces) VP. | 1 |
| 1.24 | 2057978 | > RONDELLE A5,3 DIN6797 FST ZN (4 PIECES) | 1 |

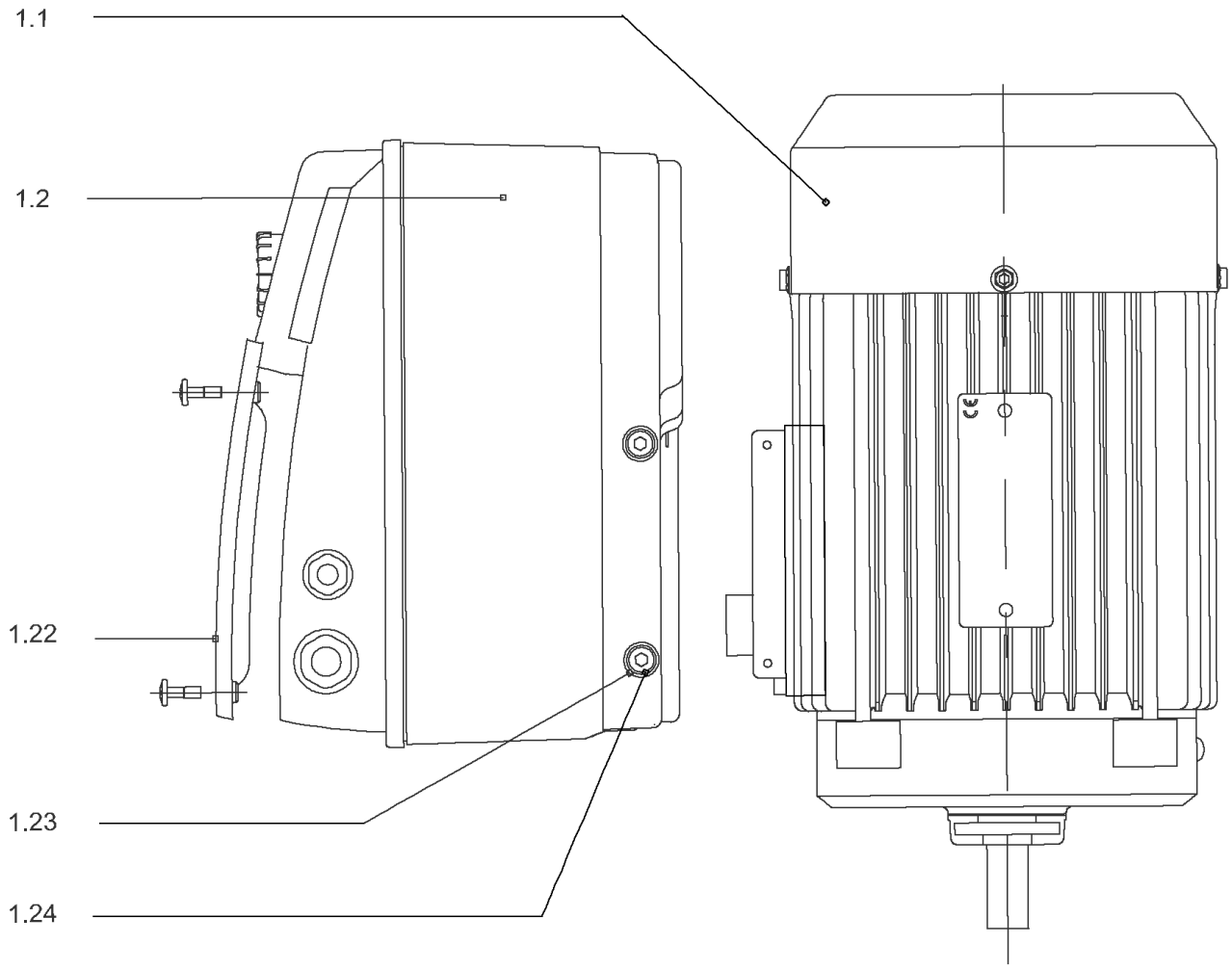
1.1
1.2
1.22
1.23
1.24

## DRIVE HELIX-VE2203-FF240-IE4-WE KIT

| Item | Article no. | Description | Quantity |
|---|---|---|---|
| 1.1 | 4207932 | MO.5.5/2/132FF240 3~380V 60Hz IE4 WE VP. | 1 |
| | | SPARE PARTS MOTOR:ON REQUEST | 1 |
| 1.2 | 4212634 | MODULE HELIX-VE2203-IE4-WE KIT | 1 |
| 1.22 | 2111344 | > MODULE COVER/GASKET TL5 KIT | 1 |
| 1.23 | 4215716 | > SCREW M5X16 DIN912 8.8 A2A (4pieces) VP. | 1 |
| 1.24 | 2057978 | > RONDELLE A5,3 DIN6797 FST ZN (4 PIECES) | 1 |

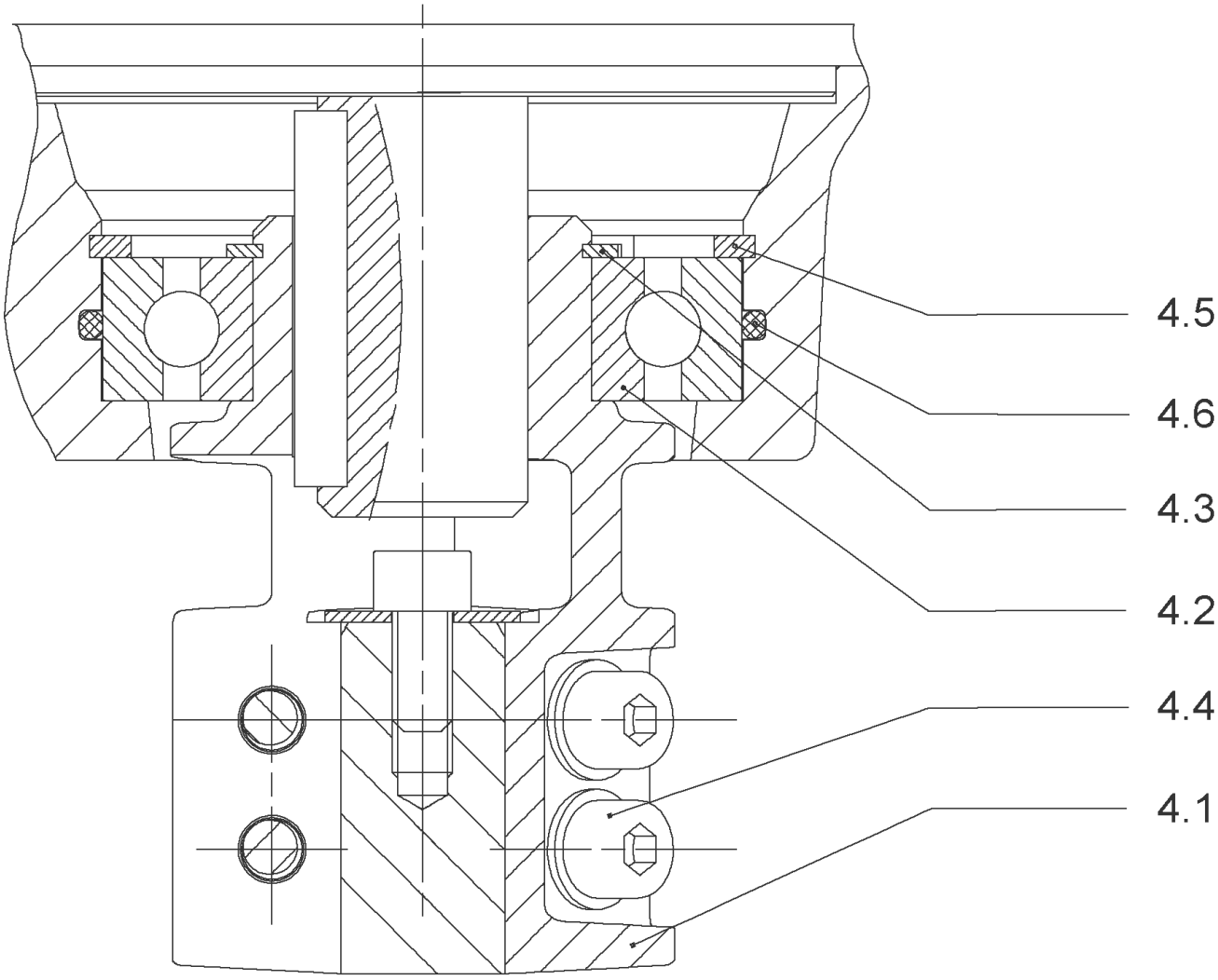
4.5
4.6
4.3
4.2
4.4
4.1

## COUPLING D.22XD.38 FF240T130 HELIX KIT (4186347)

| Item | Article no. | Description | Quantity |
|---|---|---|---|
| 4.1 | | COUPLING-VMI-D22xD38-FF265-MACHINED | 1 |
| 4.2 | 2131017 | BALL BEARING 6310/ZZ-C4(HT)VP. | 1 |
| 4.3 | 4234253 | CIRCLIP-FOR-SHAFT-D50x2 VP. | 1 |
| 4.4 | 4157726 | SCREW KIT M8X30 (4 PIECES) | 1 |
| 4.5 | 4234255 | CIRCLIPS 110X4 VP. | 1 |
| 4.6 | 4233944 | O-RING ID.110 VP. | 1 |
| | | NOMEL CONTACT WASHER 8x16x1,4 STEEL ZC | 1 |

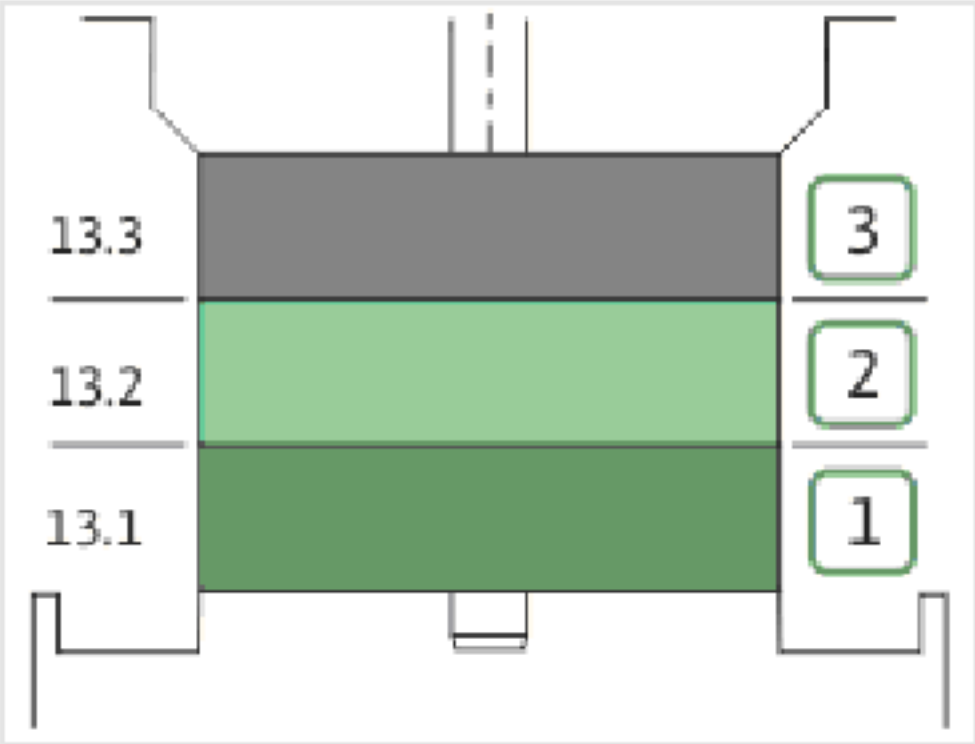
13.3
13.2
13.1
3
2
1

| Item | Article no. | Description | Quantity |
|---|---|---|---|
| 13.1 | 4157739 | FIRST STAGE HELIX 22 1.4307 KIT | 1 |
| | | > IMPELLER-H1-M+22-304 | 1 |
| | | > MACH.STG-CASING-WOGV-WNR-M+22-304 | 1 |
| 13.2 | 4157740 | BEARING STAGE HELIX 22 1.4307 KIT | 1 |
| | | > IMPELLER-H2-M+22-304 | 1 |
| | | > MACH.BEARING-STG-CASING-WNR-M+22-304 | 1 |
| | | > SHAFT-SLEEVE-D26xD22x16-CW | 1 |
| 13.3 | 4157743 | INTERMEDIATE STAGE HELIX 22 KIT | 1 |
| | | > MACH.STD-STG-CASING-WGV+NR-M+22-304 | 1 |
| | | > IMPELLER-H2-M+22-304 | 1 |

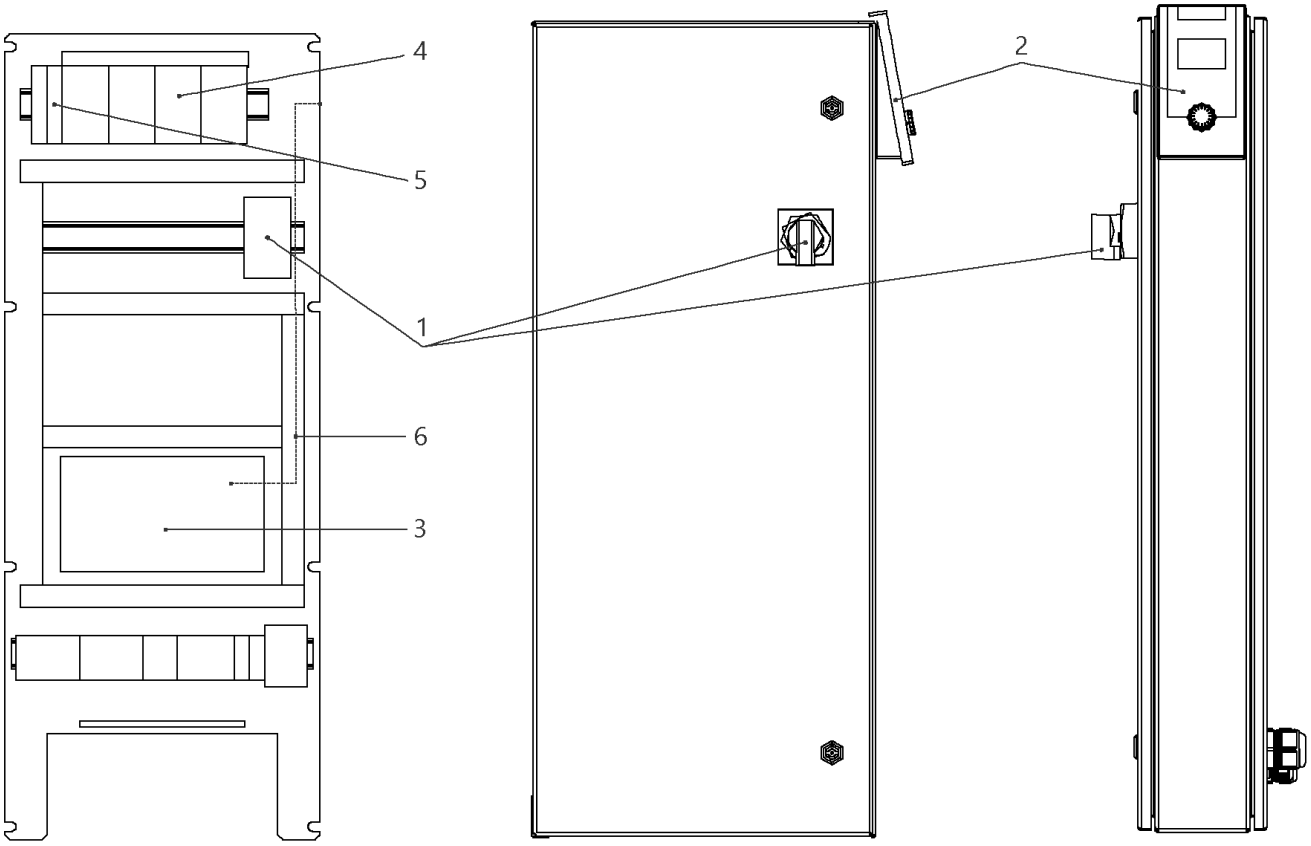
4
5
1
6
3
2

## W-CTRL-SCE-B-3x13A-T34-FM-ND2-AVC-PKG

| Item | Article no. | Description | Quantity |
|---|---|---|---|
| 1 | 2104473 | MAIN SWITCH OT63F3 L105 KIT | 1 |
| 2 | 4184784 | CONTROL PANEL HMI SC KIT | 1 |
| 2 | 4185259 | ASSEMBLY DISPLAY SC PKG VP. | 1 |
| Note: DISPLAY ALONE / PLATINE SEULE | | | |
| 3 | 4185257 | ASSEMBLY CPU SCe Booster VP. | 1 |
| 4 | 2051217 | AUTOM.CIRCUIT BREAKER S203 B16 TO7,5kW | 1 |
| 5 | 2046288 | CIRCUIT BREAKER S201 B16 | 1 |
| 6 | 4194956 | PATCH CABLE RJ45 CAT6 1,0M BLUE SC-PANEL | 1 |

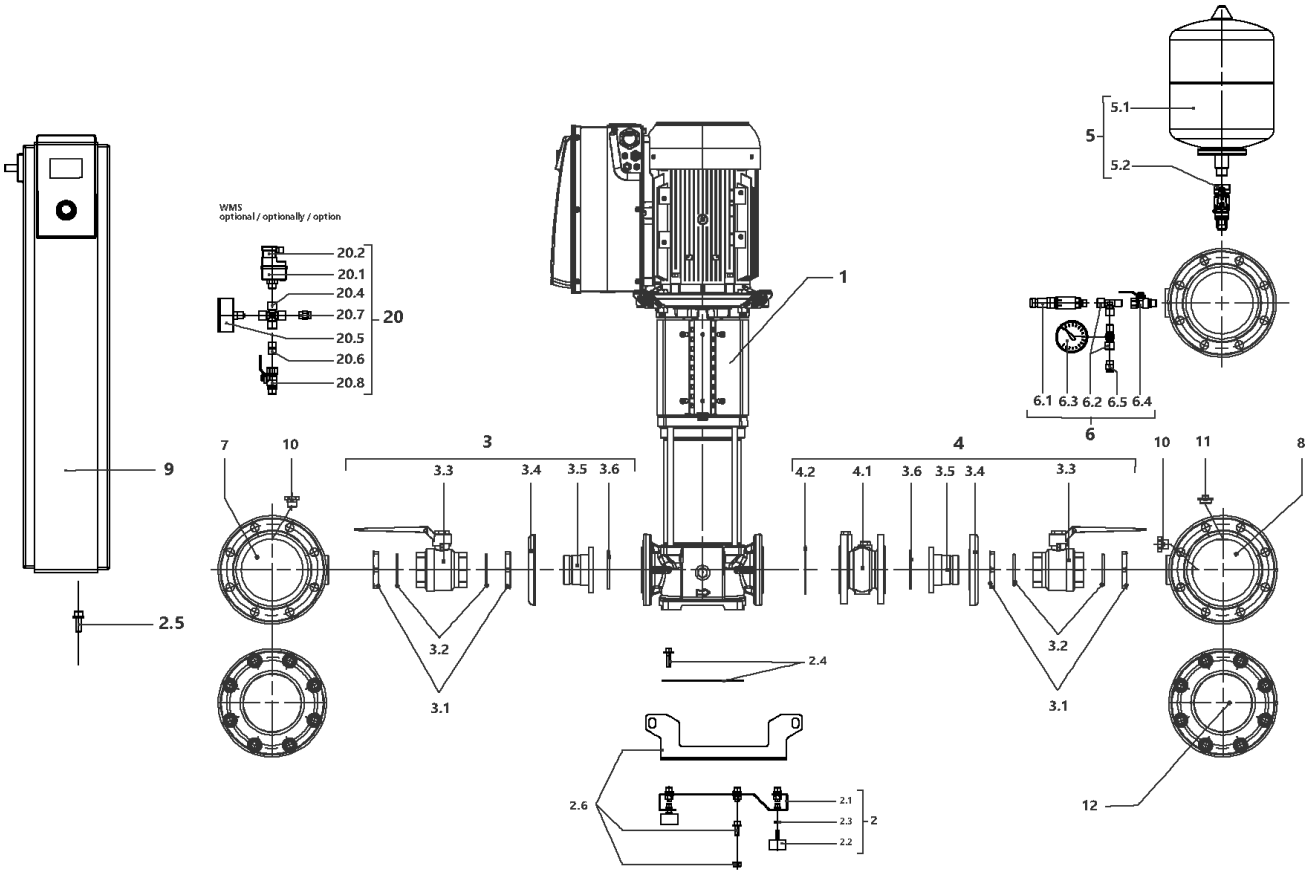
WMS
optional / optionally / option
20.2
20.1
20.4
20.7
20.5
20.6
20.8
20
1
5.1
5
5.2
6.1 6.3 6.2 6.5 6.4
6
9
7
10
3
3.3
3.4
3.5 3.6
4.2
4.1
3.6 3.5 3.4
4
10
11
8
2.5
3.2
3.1
2.4
2.6
2.1
2.3
2.2
2
12

## SiBoost Smart 3HELIX VE2204 (2540907)

| Item | Article no. | Description | Quantity |
|---|---|---|---|
| 1 | | HELIX VE2204-4/16/E/S-FF240 | 1 |
| 2 | 4203986 | BASE PLATE DE3 1150x420 M10 KIT | 1 |
| 2.1 | | > BASEPLATE_3x4/6/10/16V_E300_BOX_150 | 1 |
| 2.2 | 2027881 | > VIBRATION DAMPER M.10X20 D.70 | 1 |
| 2.3 | 2028281 | > NUT M10 DIN936 (ISO4035) 17H VZ | 1 |
| 2.4 | 4203978 | > HOLDER PUMP Siboost Helix 22 KIT | 1 |
| 2.5 | 4197084 | > HOLDER SWITCHBOX WILO Smart Control KIT | 1 |
| 2.6 | 4203979 | > LIFTING Siboost HELIX 22/36 KIT | 1 |
| 3 | 4203980 | SUCTION SIDE Siboost Helix 22 KIT | 1 |
| 3.1 | 2028689 | > NUT G2"X14 RG | 1 |
| 3.2 | 2028690 | > O-RING ID.53,35X5,33 EP851 | 1 |
| 3.2 | 2663977 | > BALL VALVE TYP250W IG.2" PN35 GIACOMINI | 1 |
| 3.4 | 2028285 | > LAPPED FLANGE DN50 1.4301 DIN2642P | 1 |
| 3.5 | 4203981 | > UNION INSERT DN50-G2" FLANGE AISI304 VP. | 1 |
| 3.6 | 2029911 | > O-RING ID.69,2X5,33 EPDM 70 SHR | 1 |
| 4 | 4203982 | DELIVERY SIDE Siboost Helix 22 KIT | 1 |
| 3.1 | 2028689 | > NUT G2"X14 RG | 1 |
| 3.2 | 2028690 | > O-RING ID.53,35X5,33 EP851 | 1 |
| 3.3 | 2663977 | > BALL VALVE TYP250W IG.2" PN35 GIACOMINI | 1 |
| 3.4 | 2028285 | > LAPPED FLANGE DN50 1.4301 DIN2642P | 1 |
| 3.5 | 4203981 | > UNION INSERT DN50-G2" FLANGE AISI304 VP. | 1 |
| 3.6 | 2029911 | > O-RING ID.69,2X5,33 EPDM 70 SHR | 1 |
| 4.1 | 2118590 | > NON RETURN VALVE DN50 PN16 VP. | 1 |
| 4.2 | 4202854 | > Flat gasket D61x107x2_DN50_PN25_FIBER VP | 1 |
| 5 | 4203983 | DIAPHREM TANK 8L/PN16 DIN4807/T5 KIT | 1 |
| 5.1 | 2045914 | > DIAPHREM TANK 8L TYP-DD 16BAR | 1 |
| 5.2 | 4189350 | > FLOW FITTING G3/4 FOR DIAPHRAG VESSEL VP | 1 |
| 6 | 4197076 | PRESSURE SENSOR/ GAUGE 0-16BAR KIT | 1 |
| 6.1 | 2085909 | > PRESS.SENSOR 1/4" 0-16BAR 4-20MA VP. | 1 |
| 6.2 | 4197077 | > T-PIECE 1/4" VP. | 1 |
| 6.3 | 2028692 | > PRESSURE GAUGE NG63-PN16-G1/4 | 1 |
| 6.4 | 2028291 | > BALL TAP R1/4" PN42 GIACOMINI R254DL | 1 |
| 6.5 | 2028691 | > BLOWGUN 1/4" MS 30BAR VP. | 1 |
| 7 | 4203987 | PIPE DE3 DN100-3x2"+2x1/4x900 VP. | 1 |

| Item | Article no. | Description | Quantity |
|---|---|---|---|
| 8 | 4203988 | PIPE DE3 DN100-3x2"+2x1/4+1x3/4x900 VP. | 1 |
| 9 | | W-CTRL-SCE-B-3x16A-T34-FM-ND2-AVC-PKG | 1 |
| 10 | 4197079 | PLUG G1/4"x10 AISI304 KIT | 1 |
| 11 | 2032654 | PLUG R3/4" MS VIEGA 1751 | 1 |
| 12 | 4203989 | BLIND-FLANGE DN100 PN16 -1.4301 KIT | 1 |
| | 2094573 | > NUT M16 DIN934 A2 1.4301 VP. | 1 |
| | 2107590 | > SCREW M16x70 DIN933 A2 (8 PIECES) | 1 |
| | 2094572 | > WASHER A17 DIN125 A2 1.4301 VP. | 1 |
| | | > FULL FLANGE ST.DN100 PN16 EN1092-1/05 A2 | 1 |
| | | > FLANGE COVER DN100 DIN 3443 FORM A | 1 |
| | 2106342 | > FLAT GASKET D.120/162X2 DN100 C4430 VP. | 1 |
| 20 | | ASSEMBLY WMS. DE-EB. +VP | 1 |
| 20.1 | 2028652 | > PRESSURE SWITCH PS3-ASR 1/(1,3) VP. | 1 |
| 20.2 | 2130983 | > PLUG PS3-415 WITH KABEL 1,5M 2NO VP. | 1 |
| 20.4 | 2028290 | > CROSSPIECE R1/4" MS-NICKEL | 1 |
| 20.5 | 2028687 | > PRESSURE GAUGE NG63 R1/4" HI.0-6BAR | 1 |
| 20.6 | 2054268 | > DUAL NIPPLE G1/4" x G1/4" MS VP. | 1 |
| 20.7 | 2028691 | > BLOWGUN 1/4" MS 30BAR VP. | 1 |
| 20.8 | 2028291 | > BALL TAP R1/4" PN42 GIACOMINI R254DL | 1 |

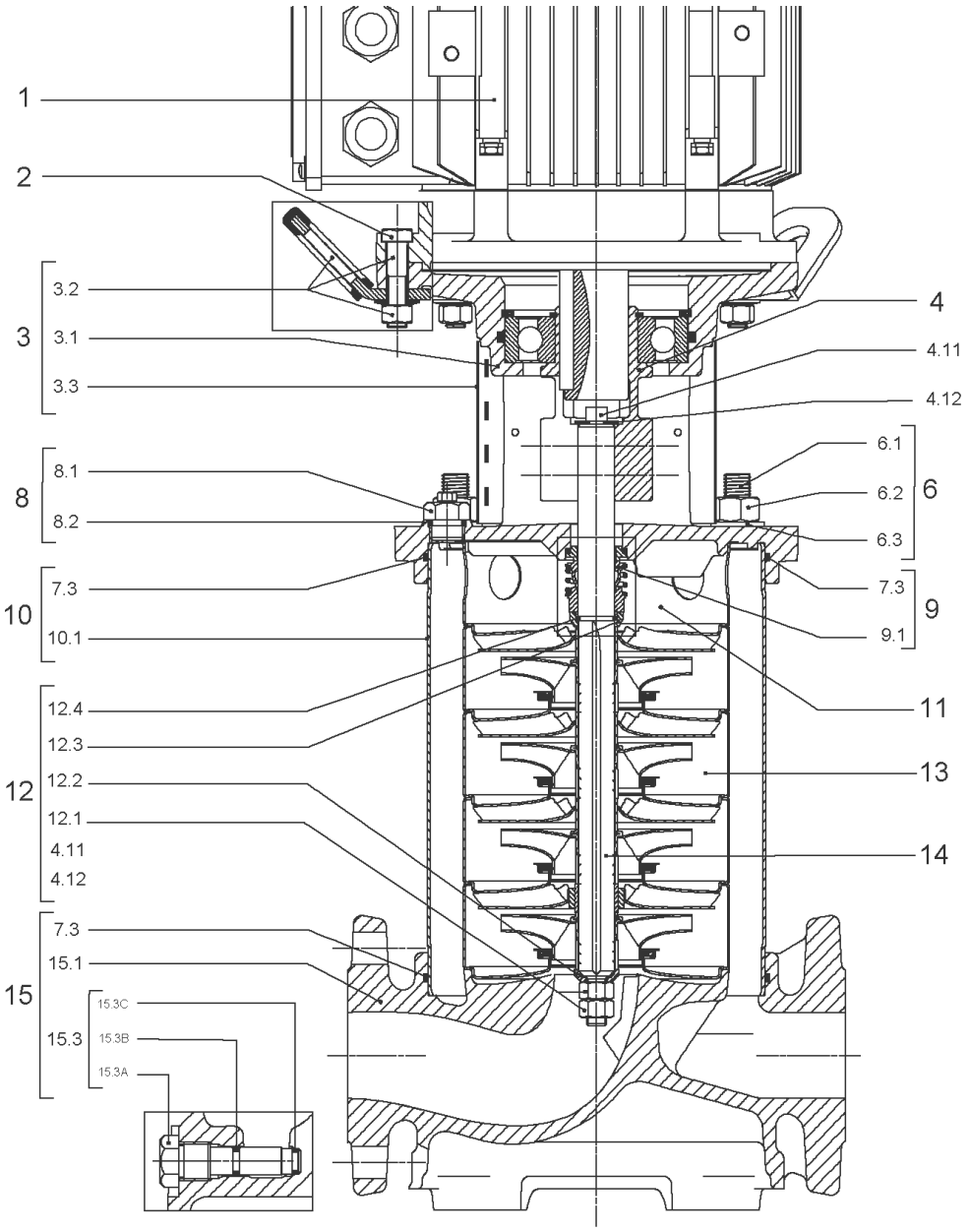
1
2
3
3.2
3.1
3.3
4
4.11
4.12
8
8.1
8.2
6
6.1
6.2
6.3
10
7.3
10.1
9
7.3
9.1
11
12
12.4
12.3
12.2
12.1
4.11
4.12
13
14
15
7.3
15.1
15.3
15.3C
15.3B
15.3A

| Item | Article no. | Description | Quantity |
|---|---|---|---|
| 1 | | DRIVE HELIX-VE2204-FF240-IE2-ATB KIT | 1 |
| Note: MOTOR BRAND ATB | | | |
| 1 | | DRIVE HELIX-VE2204-FF240-IE4-WE KIT | 1 |
| Note: MOTOR BRAND WILO ELEC | | | |
| | | SPARE PARTS MOTOR:ON REQUEST | 1 |
| 2 | 4174093 | SCREW M12X50 (4 PIECES) | 1 |
| 3 | 4186358 | LANTERN HELIX OPTI 8" FF240 KIT | 1 |
| 3.1 | | > M+8_LANTERN_ONE-PIECE_FF240_CATA_DWA | 1 |
| 3.2 | 4186346 | > EYELET CPL.FF240 HELIX (4 PIECES) | 1 |
| 3.3 | 4184853 | > COUPLING PROTECTOR FT HELIX 8'' KIT | 1 |
| 4 | 4186347 | COUPLING D.22XD.38 FF240T130 HELIX KIT | 1 |
| 6 | 4179581 | STUD BOLT M16X305.5 KIT | 1 |
| 6.1 | | > TIE BOLT M16-305.5x24x44-1.4057 | 1 |
| 6.2 | 4179562 | > NUT M16 8.8 ISO4032 (4 PIECES) | 1 |
| 6.3 | 4097852 | > WASHER-CS-16.4-32-2.8-NFE25-511-A2 | 1 |
| 8 | 4186377 | FILING/PURGING PLUG 304 HELIX KIT | 1 |
| 8.1 | | > FILLING/VENTING-PLUG-MVI8/10"-304 | 1 |
| 8.2 | 4032291 | > O-RING 17x3 EPDM KTW/WRC | 1 |
| 9 | 4192148 | SEAL-KIT-HELIX22-36-52 FIRST O/E | 1 |
| 7.3 | 4179571 | > O-RING HOUSING PIPE HELIX22/36/52 VP. | 1 |
| 9.1 | 4179573 | > M.SEAL.HELIX22-36-52 O/E VP. | 1 |
| 10 | 4181077 | HOUSING-PIPE D.204X264 1.4307 KIT | 1 |
| 7.3 | 4179571 | > O-RING HOUSING PIPE HELIX22/36/52 VP. | 1 |
| 10.1 | | > HOUSING-PIPE Ø204-M+2204/3603-304 | 1 |
| 11 | 4179143 | CENTERING STAGE-RETURN HELIX22 1.4307 VP | 1 |
| 12 | 4184856 | SHAFT EQUIPMENT HELIX 22 FIRST KIT | 1 |
| 13 | | HYDRAULIC HELIX V 2204 | 1 |
| 14 | 4186344 | SHAFT D.22X351 1.4057 VP. | 1 |
| 15 | 4186357 | EQUIPED HOUSING HELIX OPTI DN50 GJL KIT | 1 |
| 15.1 | | > PUMP CASING MONO.GJL M+8" DN50 DWA | 1 |
| 15.3 | 4106048 | > DRAIN/PRIMING PLUG EPDM HELIX FIRST KIT | 1 |
| 15.3A | | >> DRAIN AND PRIMING PLUG-VMI10"-304 | 1 |
| 15.3B | 4032293 | >> O-RING-10x3-EPDM-KTW/WRC | 1 |
| 15.3C | 4233957 | >> O-RING ID.9 EPDM VP. | 1 |

| Item | Article no. | Description | Quantity |
|---|---|---|---|
| 7.3 | 4179571 | > O-RING HOUSING PIPE HELIX22/36/52 VP. | 1 |

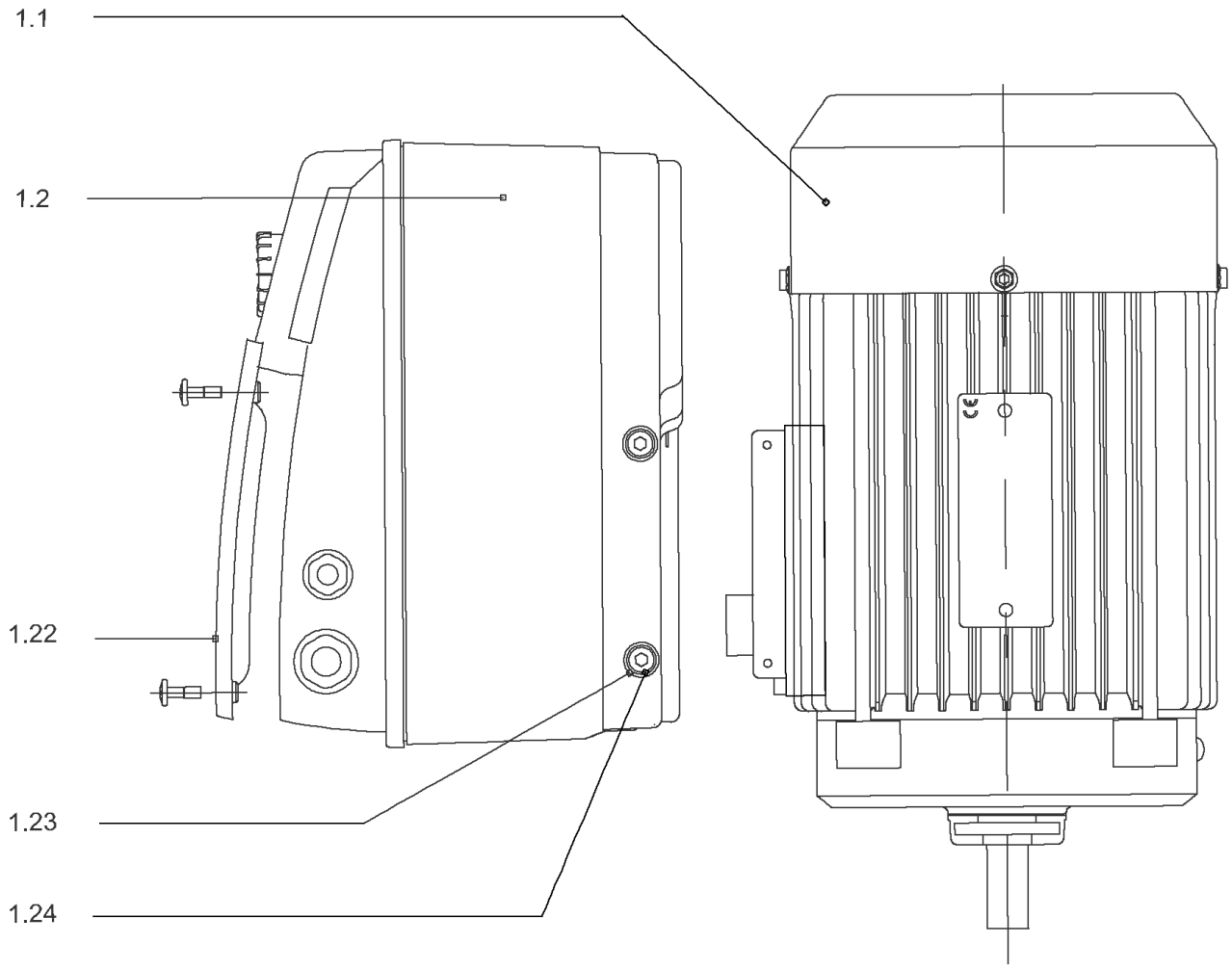
1.1
1.2
1.22
1.23
1.24

## DRIVE HELIX-VE2204-FF240-IE2-ATB KIT

| Item | Article no. | Description | Quantity |
|---|---|---|---|
| 1.1 | | MOTOR 7,5/2/132 FF240 3~380V 60HZ IE2 VP | 1 |
| Note: no longer available/nicht mehrlieferbar/n'est plus disponible | | | |
| | | SPARE PARTS MOTOR:ON REQUEST | 1 |
| 1.2 | 4144857 | MODULE HELIX-VE2204-IE2-ATB KIT | 1 |
| 1.22 | 2111344 | > MODULE COVER/GASKET TL5 KIT | 1 |
| 1.23 | 4215716 | > SCREW M5X16 DIN912 8.8 A2A (4pieces) VP. | 1 |
| 1.24 | 2057978 | > RONDELLE A5,3 DIN6797 FST ZN (4 PIECES) | 1 |

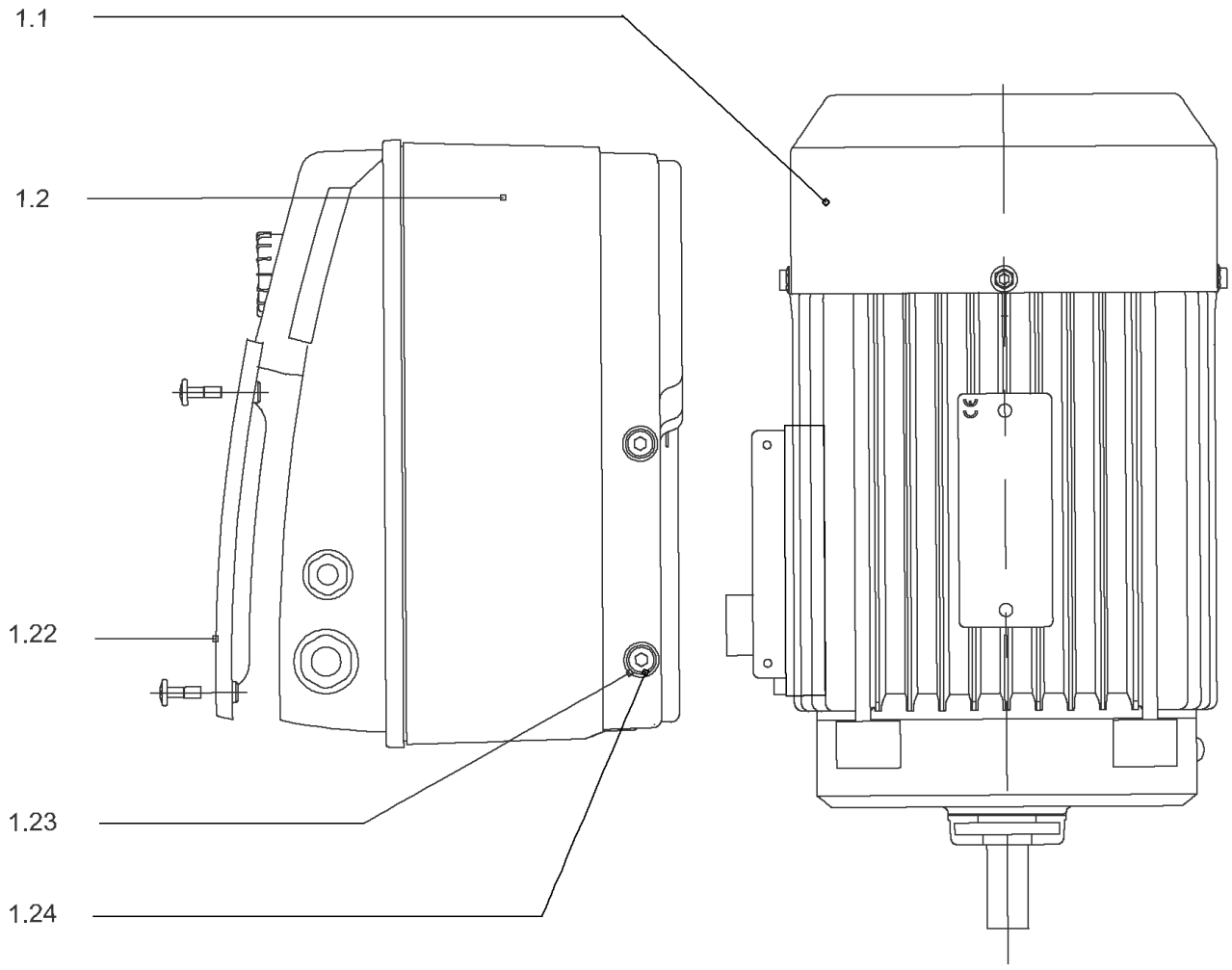
1.1
1.2
1.22
1.23
1.24

## DRIVE HELIX-VE2204-FF240-IE4-WE KIT

| Item | Article no. | Description | Quantity |
|---|---|---|---|
| 1.1 | 4207940 | MO.7.5/2/132FF240 3~380V 60Hz IE4 WE VP. | 1 |
| | | SPARE PARTS MOTOR:ON REQUEST | 1 |
| 1.2 | 4212639 | MODULE HELIX-VE2204-IE4-WE KIT | 1 |
| 1.22 | 2111344 | > MODULE COVER/GASKET TL5 KIT | 1 |
| 1.23 | 4215716 | > SCREW M5X16 DIN912 8.8 A2A (4pieces) VP. | 1 |
| 1.24 | 2057978 | > RONDELLE A5,3 DIN6797 FST ZN (4 PIECES) | 1 |

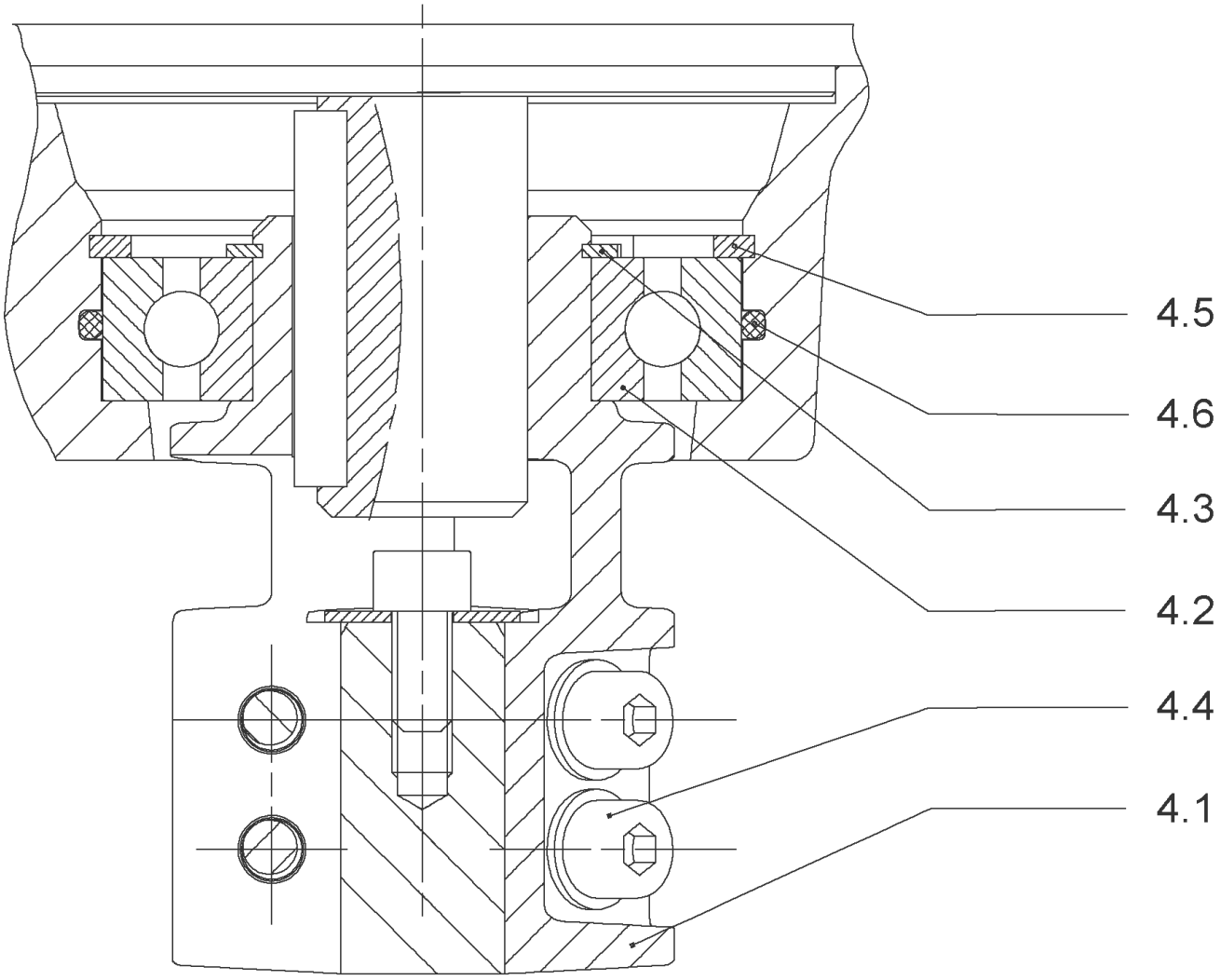
4.5
4.6
4.3
4.2
4.4
4.1

## COUPLING D.22XD.38 FF240T130 HELIX KIT (4186347)

| Item | Article no. | Description | Quantity |
|---|---|---|---|
| 4.1 | | COUPLING-VMI-D22xD38-FF265-MACHINED | 1 |
| 4.2 | 2131017 | BALL BEARING 6310/ZZ-C4(HT)VP. | 1 |
| 4.3 | 4234253 | CIRCLIP-FOR-SHAFT-D50x2 VP. | 1 |
| 4.4 | 4157726 | SCREW KIT M8X30 (4 PIECES) | 1 |
| 4.5 | 4234255 | CIRCLIPS 110X4 VP. | 1 |
| 4.6 | 4233944 | O-RING ID.110 VP. | 1 |
| | | NOMEL CONTACT WASHER 8x16x1,4 STEEL ZC | 1 |

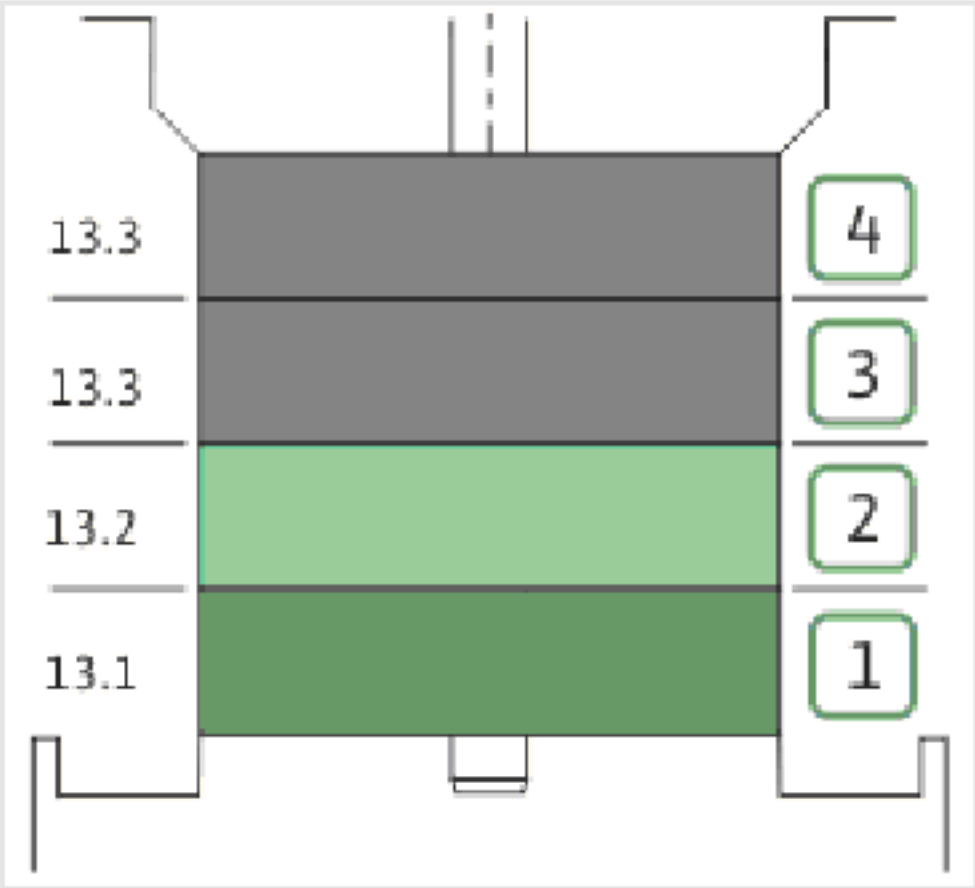
13.3
13.3
13.2
13.1
4
3
2
1

| Item | Article no. | Description | Quantity |
|---|---|---|---|
| 13.1 | 4157739 | FIRST STAGE HELIX 22 1.4307 KIT | 1 |
| | | > IMPELLER-H1-M+22-304 | 1 |
| | | > MACH.STG-CASING-WOGV-WNR-M+22-304 | 1 |
| 13.2 | 4157740 | BEARING STAGE HELIX 22 1.4307 KIT | 1 |
| | | > IMPELLER-H2-M+22-304 | 1 |
| | | > MACH.BEARING-STG-CASING-WNR-M+22-304 | 1 |
| | | > SHAFT-SLEEVE-D26xD22x16-CW | 1 |
| 13.3 | 4157743 | INTERMEDIATE STAGE HELIX 22 KIT | 1 |
| | | > MACH.STD-STG-CASING-WGV+NR-M+22-304 | 1 |
| | | > IMPELLER-H2-M+22-304 | 1 |

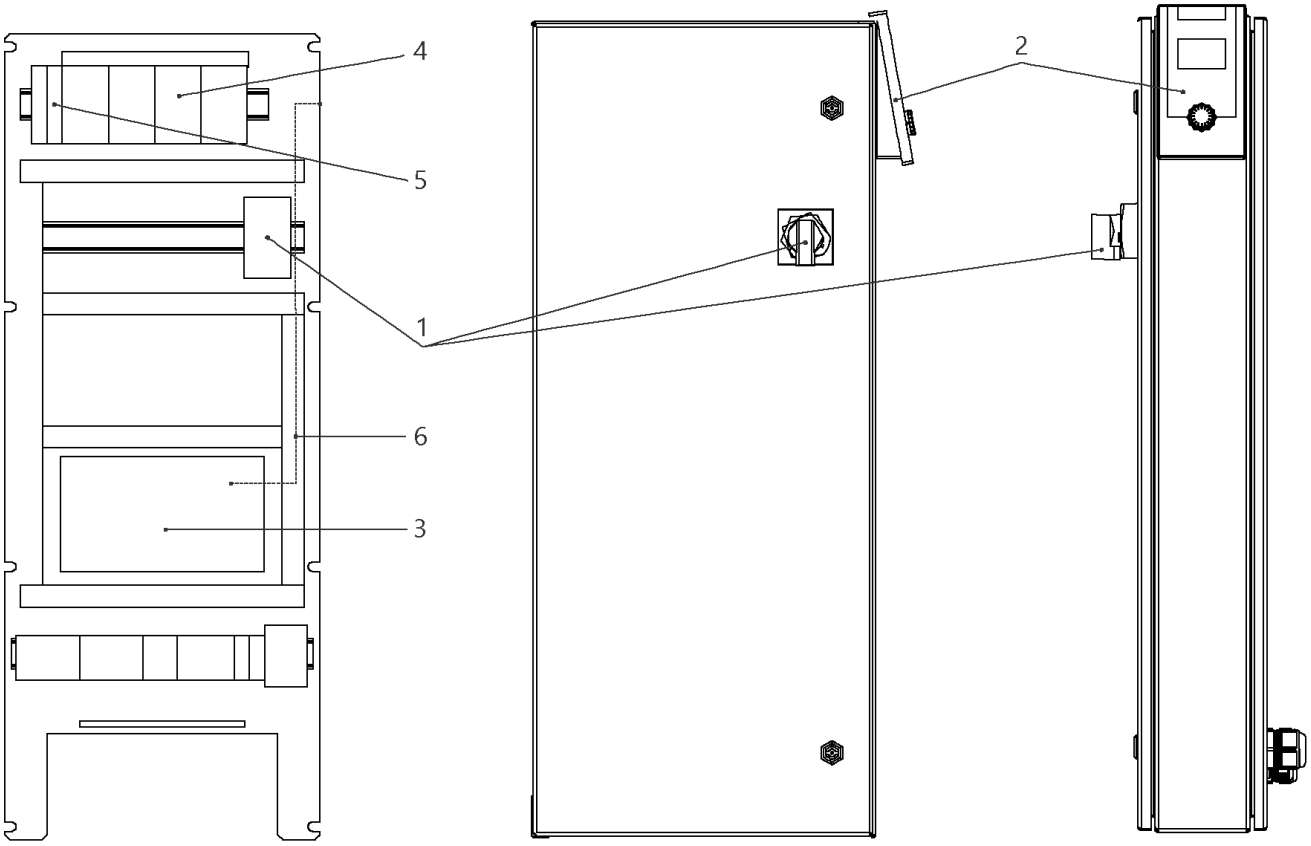
4
5
1
6
3
2

## W-CTRL-SCE-B-3x16A-T34-FM-ND2-AVC-PKG

| Item | Article no. | Description | Quantity |
|---|---|---|---|
| 1 | 2104473 | MAIN SWITCH OT63F3 L105 KIT | 1 |
| 2 | 4184784 | CONTROL PANEL HMI SC KIT | 1 |
| 2 | 4185259 | ASSEMBLY DISPLAY SC PKG VP. | 1 |
| Note: DISPLAY ALONE / PLATINE SEULE | | | |
| 3 | 4185257 | ASSEMBLY CPU SCe Booster VP. | 1 |
| 4 | 4197832 | AUTOMATIC CIRCUIT BREAKER S203 B20 VP. | 1 |
| 5 | 2046288 | CIRCUIT BREAKER S201 B16 | 1 |
| 6 | 4194956 | PATCH CABLE RJ45 CAT6 1,0M BLUE SC-PANEL | 1 |

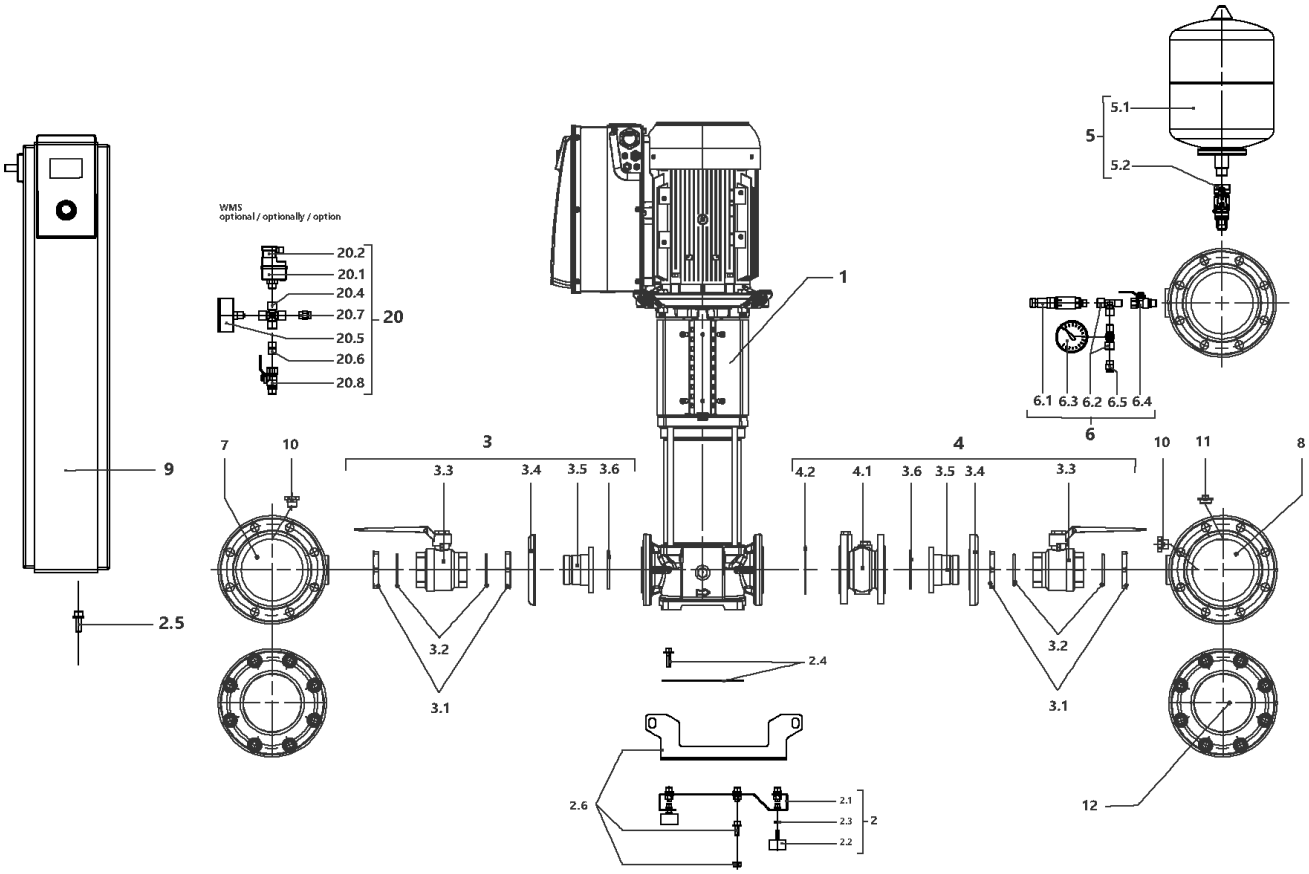
WMS
optional / optionally / option
20.2
20.1
20.4
20.7
20.5
20.6
20.8
20
1
5.1
5
5.2
6.1 6.3 6.2 6.5 6.4
6
9
7
10
3
3.3
3.4
3.5 3.6
4.2
4.1
3.6 3.5 3.4
4
10
11
8
2.5
3.2
3.1
2.4
2.6
2.1
2.3
2.2
2
12

## SiBoost Smart 3HELIX VE2205 (2540908)

| Item | Article no. | Description | Quantity |
|---|---|---|---|
| 1 | | HELIX VE2205-4/16/E/KS/2G | 1 |
| 2 | 4204001 | BASE PLATE DE3 1750x420 M10 | 1 |
| 2.1 | | > BASE_FR_3x22/36/52V_E500_L400_BOX150-250 | 1 |
| 2.2 | 2027881 | > VIBRATION DAMPER M.10X20 D.70 | 1 |
| 2.3 | 2028281 | > NUT M10 DIN936 (ISO4035) 17H VZ | 1 |
| 2.4 | 4203978 | > HOLDER PUMP Siboost Helix 22 KIT | 1 |
| 2.5 | 4197084 | > HOLDER SWITCHBOX WILO Smart Control KIT | 1 |
| 2.6 | 4203979 | > LIFTING Siboost HELIX 22/36 KIT | 1 |
| 3 | 4203980 | SUCTION SIDE Siboost Helix 22 KIT | 1 |
| 3.1 | 2028689 | > NUT G2"X14 RG | 1 |
| 3.2 | 2028690 | > O-RING ID.53,35X5,33 EP851 | 1 |
| 3.2 | 2663977 | > BALL VALVE TYP250W IG.2" PN35 GIACOMINI | 1 |
| 3.4 | 2028285 | > LAPPED FLANGE DN50 1.4301 DIN2642P | 1 |
| 3.5 | 4203981 | > UNION INSERT DN50-G2" FLANGE AISI304 VP. | 1 |
| 3.6 | 2029911 | > O-RING ID.69,2X5,33 EPDM 70 SHR | 1 |
| 4 | 4203982 | DELIVERY SIDE Siboost Helix 22 KIT | 1 |
| 3.1 | 2028689 | > NUT G2"X14 RG | 1 |
| 3.2 | 2028690 | > O-RING ID.53,35X5,33 EP851 | 1 |
| 3.3 | 2663977 | > BALL VALVE TYP250W IG.2" PN35 GIACOMINI | 1 |
| 3.4 | 2028285 | > LAPPED FLANGE DN50 1.4301 DIN2642P | 1 |
| 3.5 | 4203981 | > UNION INSERT DN50-G2" FLANGE AISI304 VP. | 1 |
| 3.6 | 2029911 | > O-RING ID.69,2X5,33 EPDM 70 SHR | 1 |
| 4.1 | 2118590 | > NON RETURN VALVE DN50 PN16 VP. | 1 |
| 4.2 | 4202854 | > Flat gasket D61x107x2_DN50_PN25_FIBER VP | 1 |
| 5 | 4203983 | DIAPHREM TANK 8L/PN16 DIN4807/T5 KIT | 1 |
| 5.1 | 2045914 | > DIAPHREM TANK 8L TYP-DD 16BAR | 1 |
| 5.2 | 4189350 | > FLOW FITTING G3/4 FOR DIAPHRAG VESSEL VP | 1 |
| 6 | 4197076 | PRESSURE SENSOR/ GAUGE 0-16BAR KIT | 1 |
| 6.1 | 2085909 | > PRESS.SENSOR 1/4" 0-16BAR 4-20MA VP. | 1 |
| 6.2 | 4197077 | > T-PIECE 1/4" VP. | 1 |
| 6.3 | 2028692 | > PRESSURE GAUGE NG63-PN16-G1/4 | 1 |
| 6.4 | 2028291 | > BALL TAP R1/4" PN42 GIACOMINI R254DL | 1 |
| 6.5 | 2028691 | > BLOWGUN 1/4" MS 30BAR VP. | 1 |
| 7 | 4204002 | PIPE DE3 DN100-3x2"+2x1/4x1500 VP. | 1 |

| Item | Article no. | Description | Quantity |
|---|---|---|---|
| 8 | 4204003 | PIPE DE3 DN100-3x2"+2x1/4+1x3/4x1500 VP. | 1 |
| 9 | | W-CTRL-SCE-B-3x24A-T34-FM-ND4-AVC-PKG | 1 |
| 10 | 4197079 | PLUG G1/4"x10 AISI304 KIT | 1 |
| 11 | 2032654 | PLUG R3/4" MS VIEGA 1751 | 1 |
| 12 | 4203989 | BLIND-FLANGE DN100 PN16 -1.4301 KIT | 1 |
| | 2094573 | > NUT M16 DIN934 A2 1.4301 VP. | 1 |
| | 2107590 | > SCREW M16x70 DIN933 A2 (8 PIECES) | 1 |
| | 2094572 | > WASHER A17 DIN125 A2 1.4301 VP. | 1 |
| | | > FULL FLANGE ST.DN100 PN16 EN1092-1/05 A2 | 1 |
| | | > FLANGE COVER DN100 DIN 3443 FORM A | 1 |
| | 2106342 | > FLAT GASKET D.120/162X2 DN100 C4430 VP. | 1 |
| 20 | | ASSEMBLY WMS. DE-EB. +VP | 1 |
| 20.1 | 2028652 | > PRESSURE SWITCH PS3-ASR 1/(1,3) VP. | 1 |
| 20.2 | 2130983 | > PLUG PS3-415 WITH KABEL 1,5M 2NO VP. | 1 |
| 20.4 | 2028290 | > CROSSPIECE R1/4" MS-NICKEL | 1 |
| 20.5 | 2028687 | > PRESSURE GAUGE NG63 R1/4" HI.0-6BAR | 1 |
| 20.6 | 2054268 | > DUAL NIPPLE G1/4" x G1/4" MS VP. | 1 |
| 20.7 | 2028691 | > BLOWGUN 1/4" MS 30BAR VP. | 1 |
| 20.8 | 2028291 | > BALL TAP R1/4" PN42 GIACOMINI R254DL | 1 |

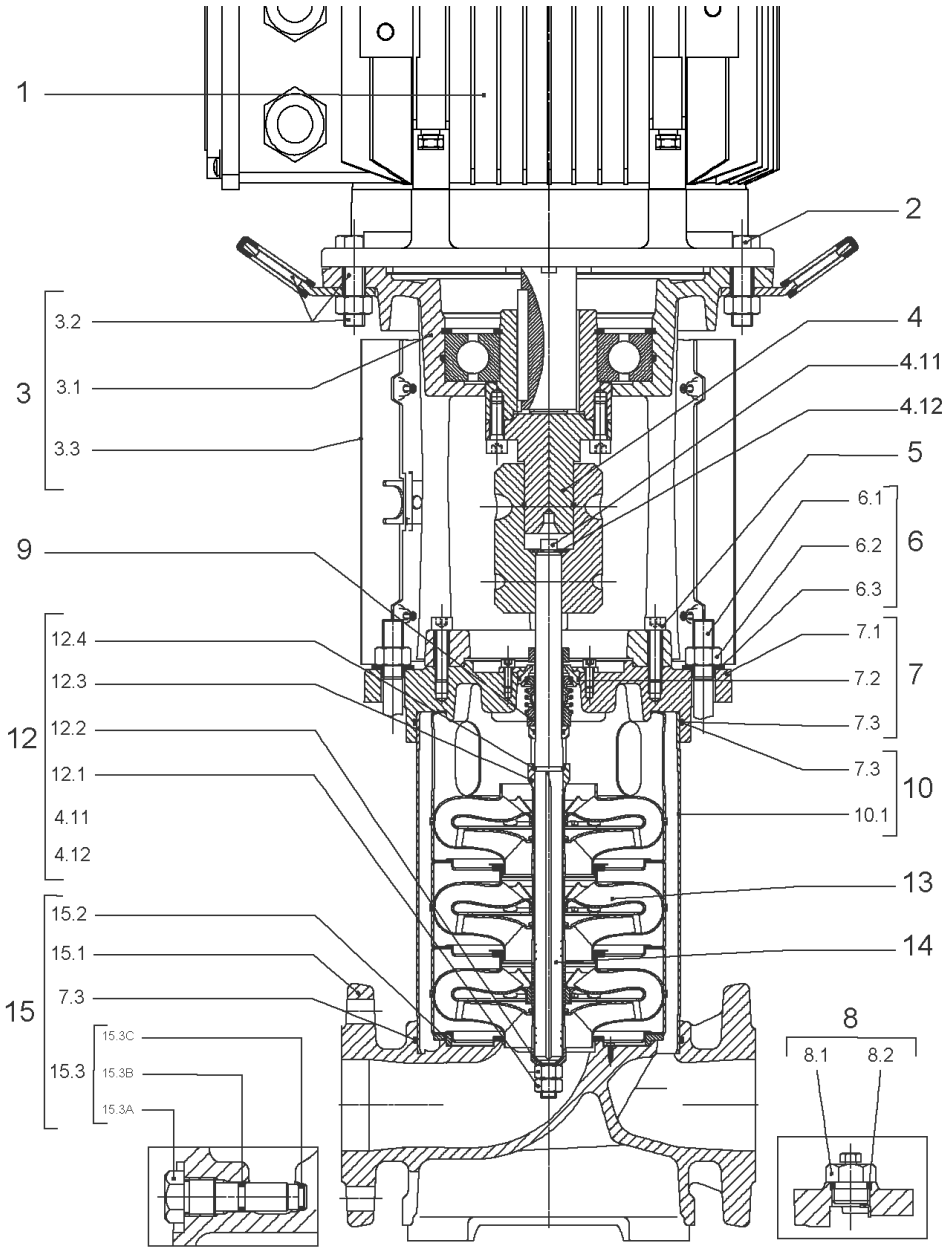
1
2
3.2
3
3.1
3.3
4
4.11
4.12
5
6.1
6
6.2
6.3
9
12.4
12.3
12
12.2
12.1
4.11
4.12
7.1
7
7.2
7.3
7.3
10
10.1
13
14
15.2
15.1
7.3
15
15.3C
15.3
15.3B
15.3A
8
8.1
8.2

## HELIX VE2205-4/16/E/KS/2G

| Item | Article no. | Description | Quantity |
|---|---|---|---|
| 1 | | DRIVE HELIX VE2205-IE2-ARC KIT | 1 |
| Note: no longer available/nicht mehrlieferbar/n'est plus disponible | | | |
| 1 | 4218536 | DRIVE HELIX VE2205-IE4-WEG KIT | 1 |
| Note: MOTOR BRAND WEG | | | |
| 2 | 4179586 | SCREW M16X60 (4 PIECES) | 1 |
| 3 | 4157721 | LANTERN HELIX 22/36 FF300 BB6312 KIT | 1 |
| 3.1 | | > LANTERN FF300 M+ GJL MACHINED+CATA 6312 | 1 |
| 3.2 | 4179589 | > EYELET CPL.FF300 HELIX(4 PIECES) | 1 |
| 3.3 | 4143969 | > COUPLING PROTECT HELIX FF KIT | 1 |
| 4 | 4143966 | COUPLING D.20XD.38 FF300 KIT | 1 |
| 5 | 4157725 | SCREW M10X40 (4 PIECES) | 1 |
| 6 | 4181164 | STUD BOLT M16X382 KIT | 1 |
| 6.1 | | > TIE BOLT M16-382x24x44-1.4057 | 1 |
| 6.2 | 4179562 | > NUT M16 8.8 ISO4032 (4 PIECES) | 1 |
| 6.3 | 4097852 | > WASHER-CS-16.4-32-2.8-NFE25-511-A2 | 1 |
| 7 | 4179565 | END SHIELD HELIX 8'' EPDM KIT | 1 |
| 7.1 | | > END SHIELD M+ GJL MACHINED+CATA | 1 |
| 7.2 | 4179564 | > O-RING D.42.52x2.62 EPDM VP. | 1 |
| 7.3 | 4179571 | > O-RING HOUSING PIPE HELIX22/36/52 VP. | 1 |
| 8 | 4186377 | FILING/PURGING PLUG 304 HELIX KIT | 1 |
| 8.1 | | > FILLING/VENTING-PLUG-MVI8/10"-304 | 1 |
| 8.2 | 4032291 | > O-RING 17x3 EPDM KTW/WRC | 1 |
| 9 | 4143973 | CARTRIDGE HELIX22-36-52 O/E KIT | 1 |
| 10 | 4181165 | HOUSING PIPE D.204X314 1.4301 KIT | 1 |
| 7.3 | 4179571 | > O-RING HOUSING PIPE HELIX22/36/52 VP. | 1 |
| 10.1 | | > HOUSING-PIPE Ø204-M+2205-304 | 1 |
| 11 | 4179143 | CENTERING STAGE-RETURN HELIX22 1.4307 VP | 1 |
| 12 | 4143967 | SHAFT EQUIPMENT HELIX V KIT | 1 |
| 13 | | HYDRAULIC HELIX V 2205 | 1 |
| 14 | 2114267 | SHAFT D.22X454 1.4057 VP. | 1 |
| 15 | 4186357 | EQUIPED HOUSING HELIX OPTI DN50 GJL KIT | 1 |
| 15.1 | | > PUMP CASING MONO.GJL M+8" DN50 DWA | 1 |
| 15.3 | 4106048 | > DRAIN/PRIMING PLUG EPDM HELIX FIRST KIT | 1 |
| 15.3A | | >> DRAIN AND PRIMING PLUG-VMI10"-304 | 1 |

| Item | Article no. | Description | Quantity |
|---|---|---|---|
| 15.3B | 4032293 | >> O-RING-10x3-EPDM-KTW/WRC | 1 |
| 15.3C | 4233957 | >> O-RING ID.9 EPDM VP. | 1 |
| 7.3 | 4179571 | > O-RING HOUSING PIPE HELIX22/36/52 VP. | 1 |

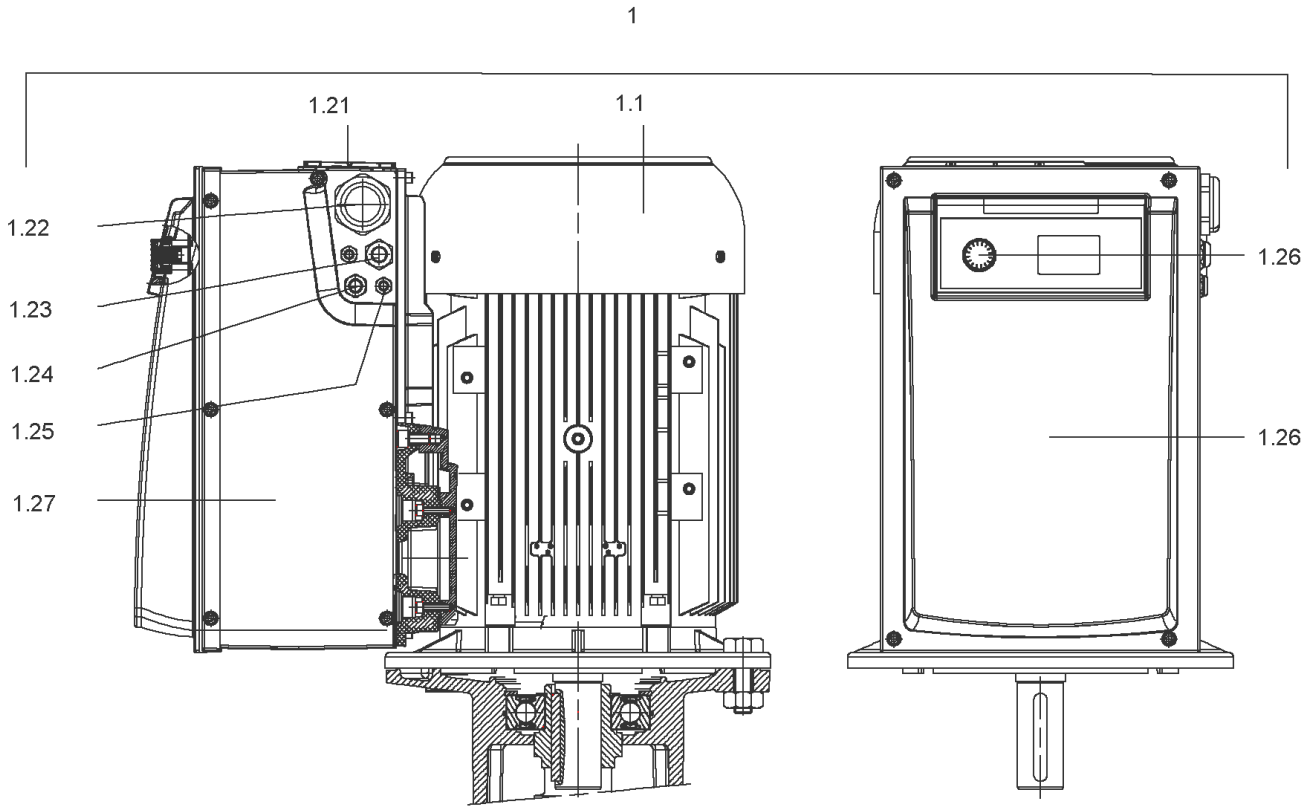
1
1.21
1.1
1.22
1.23
1.24
1.25
1.27
1.26
1.26

## DRIVE HELIX VE2205-IE2-ARC KIT

| Item | Article no. | Description | Quantity |
|---|---|---|---|
| 1.1 | | M11-2T638P55V1-160F300-N42-IE2 | 1 |
| | | SPARE PARTS MOTOR:ON REQUEST | 1 |
| 1.21 | 2132102 | FAN SMALL TL6/7 FF KIT | 1 |
| 1.25 | 2132097 | CABLE CONNECTION M12 TL6/7 FF VP. | 1 |
| 1.24 | 2132098 | CABLE CONNECTION M16 TL6/7 FF VP. | 1 |
| 1.23 | 2132099 | CABLE CONNECTION M20 TL6/7 FF VP. | 1 |
| 1.22 | 2132100 | CABLE CONNECTION SMALL M40 TL6/7 FF VP. | 1 |
| 1.27 | 2132104 | COVER SIDE TL6/7 FF CPL.VP. | 1 |
| 1.26 | 2132452 | MODULE COVER/BUTTON TL6/7 FF VP. | 1 |

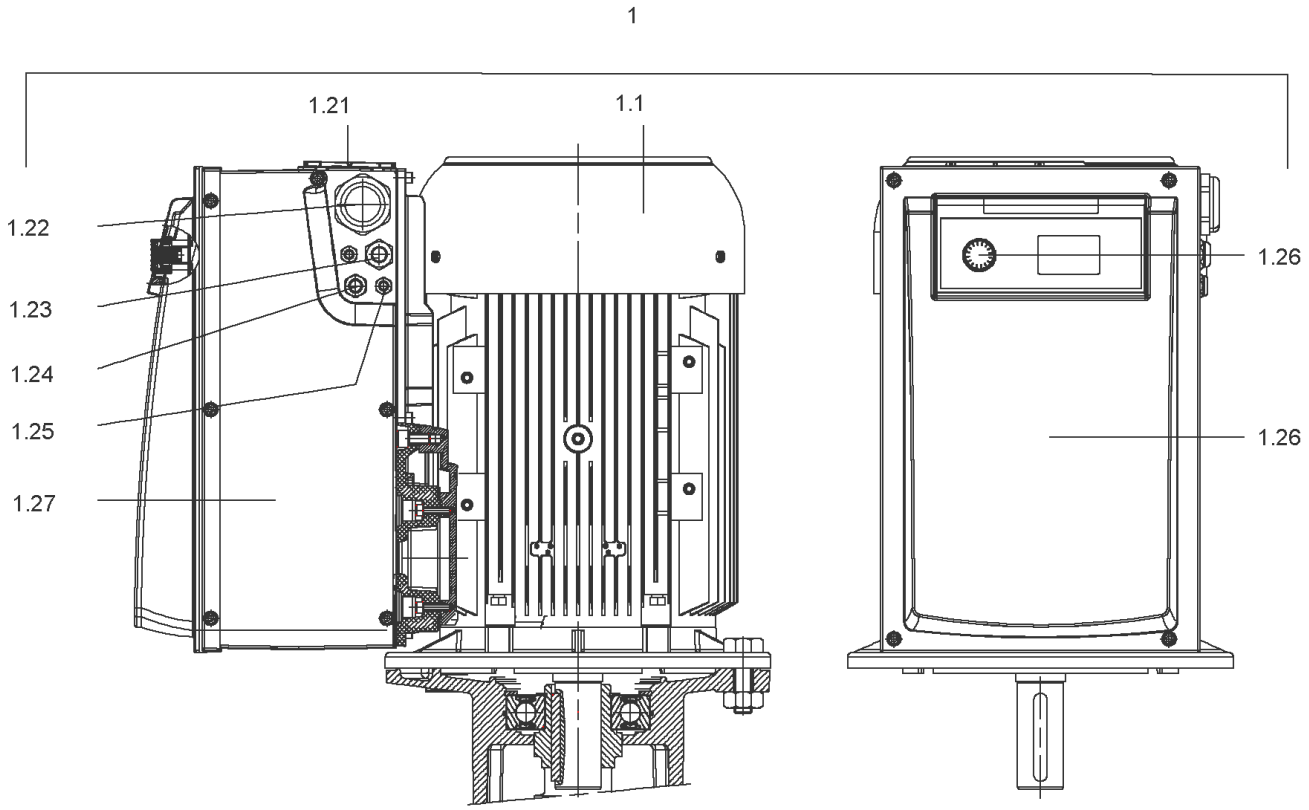
1
1.21
1.1
1.22
1.23
1.24
1.25
1.27
1.26
1.26

## DRIVE HELIX VE2205-IE4-WEG KIT (4218536)

| Item | Article no. | Description | Quantity |
|---|---|---|---|
| 1.1 | | M11-2T638P55V1-160F30-N42-ADAPT-IE4-WEG | 1 |
| | | SPARE PARTS MOTOR:ON REQUEST | 1 |
| 1.21 | 2132102 | FAN SMALL TL6/7 FF KIT | 1 |
| 1.25 | 2132097 | CABLE CONNECTION M12 TL6/7 FF VP. | 1 |
| 1.24 | 2132098 | CABLE CONNECTION M16 TL6/7 FF VP. | 1 |
| 1.23 | 2132099 | CABLE CONNECTION M20 TL6/7 FF VP. | 1 |
| 1.22 | 2132100 | CABLE CONNECTION SMALL M40 TL6/7 FF VP. | 1 |
| 1.27 | 2132104 | COVER SIDE TL6/7 FF CPL.VP. | 1 |
| 1.26 | 2132452 | MODULE COVER/BUTTON TL6/7 FF VP. | 1 |

## COUPLING D.20XD.38 FF300 KIT (4143966)

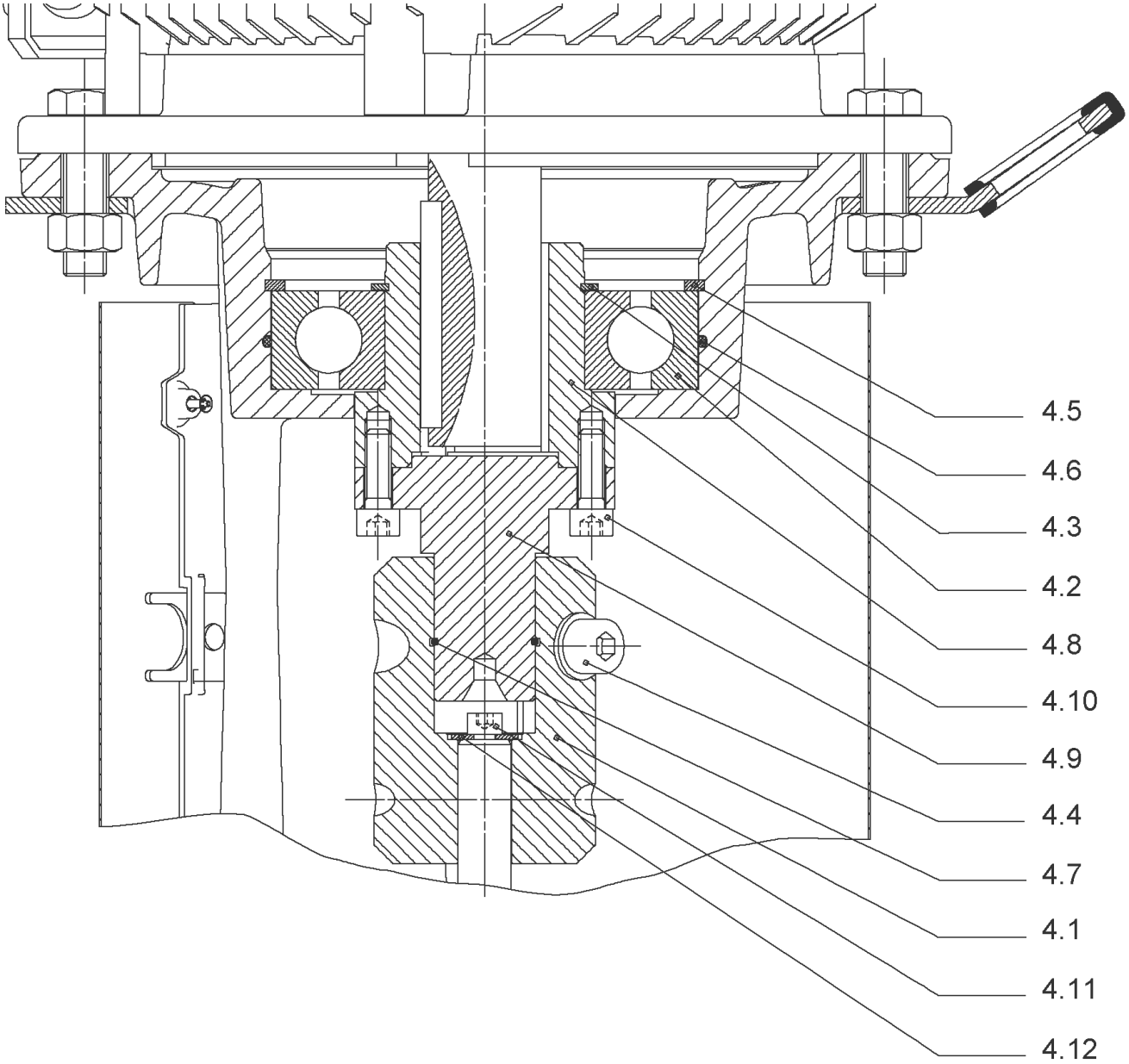

## COUPLING D.20XD.38 FF300 KIT (4143966)

| Item | Article no. | Description | Quantity |
|---|---|---|---|
| 4.1 | 4179590 | COUPLING 2 PARTS D.20XD.38XL115 VP. | 1 |
| 4.2 | 2123699 | BALL BEARING 6312/2Z-C4 (HT) VP. | 1 |
| 4.3 | 63428 | CIRCLIP-FOR-SHAFT-D60x2 | 1 |
| 4.4 | 2130991 | SCREW M12X30 ISO4762 8.8 ZN(4 PIECES) | 1 |
| 4.5 | 4032277 | CIRCLIP-HOLE-130x4 | 1 |
| 4.6 | 4006725 | O-RING ID.132,94x3,53 NBR70SR | 1 |
| 4.7 | 2130992 | RETAINING RING D.35xD.2,5 DIN7993 VP. | 1 |
| 4.8 | 4179591 | HUB D.42xD.60 VP. | 1 |
| 4.9 | 2130994 | SPACER D.38XD.55 VP. | 1 |
| 4.10 | 4094462 | SCREWS M10 ( 4 PIECES ) | 1 |
| 4.11 | 4233959 | SCREW M8x16 VP. | 1 |
| 4.12 | | SERRATED LOCK WASHER Ø8.2XØ25X35X2 | 1 |

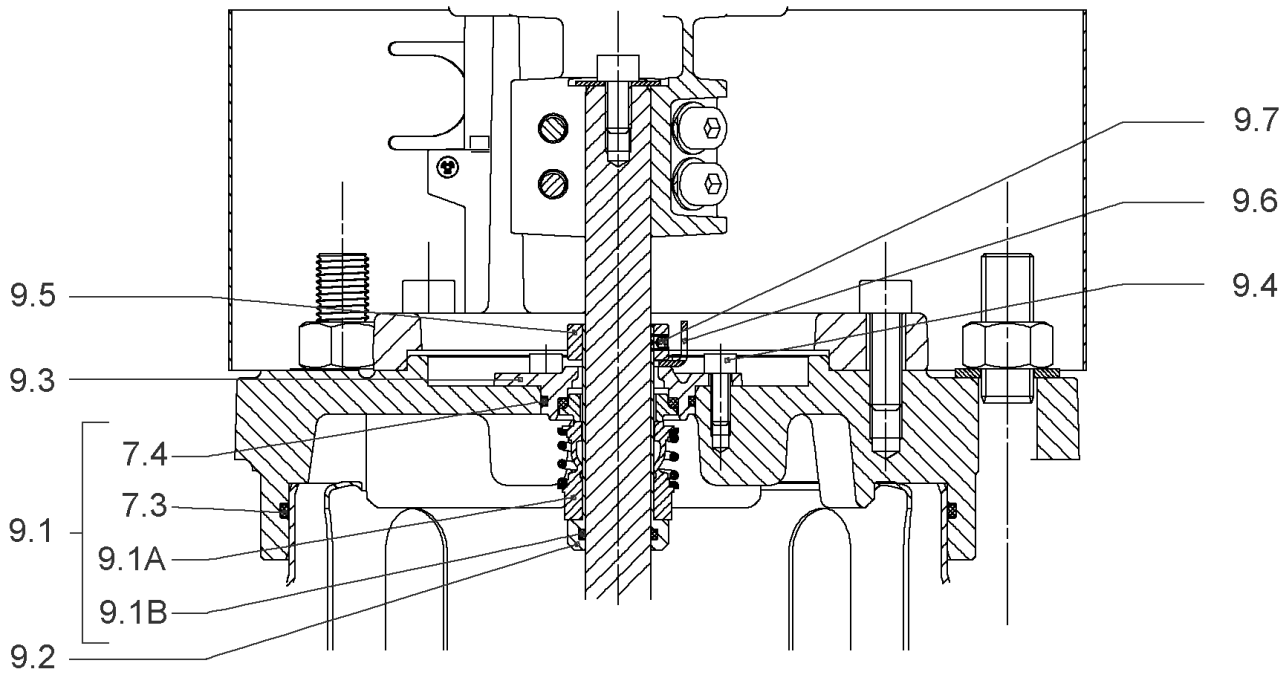
9.7
9.6
9.4
9.5
9.3
7.4
7.3
9.1
9.1A
9.1B
9.2

## CARTRIDGE HELIX22-36-52 O/E KIT (4143973)

| Item | Article no. | Description | Quantity |
|---|---|---|---|
| 9.1 | 4143974 | SEAL-KIT-HELIX22-36-52 O/E | 1 |
| 7.3 | 4179571 | > O-RING HOUSING PIPE HELIX22/36/52 VP. | 1 |
| 7.4 | 4179572 | > O-RING ID.42.52X2.62 EPDM VP. | 1 |
| 9.1A | 4179573 | > M.SEAL.HELIX22-36-52 O/E VP. | 1 |
| 9.1B | 4179574 | > O-RING ID.20x2.65 EPDM VP. | 1 |
| 9.2 | 4179566 | SHAFT SLEEVE D.20/20X60 1.4404 VP. | 1 |
| 9.3 | 4179567 | RING HOLDER Ø22 1.4301 VP. | 1 |
| 9.4 | 4176520 | SCREW CH M5x5 A4-70 ( 3PIECES ) | 1 |
| 9.5 | 4179568 | DRIVE RING D.31/22.1x11 MACH.VP. | 1 |
| 9.6 | 4179569 | TOOL M.S.CART.HELIX 8'' VP. | 1 |
| 9.7 | 4179570 | SCREW M6X16 ISO4762 8.8 GEOMET(4 PIECES) | 1 |

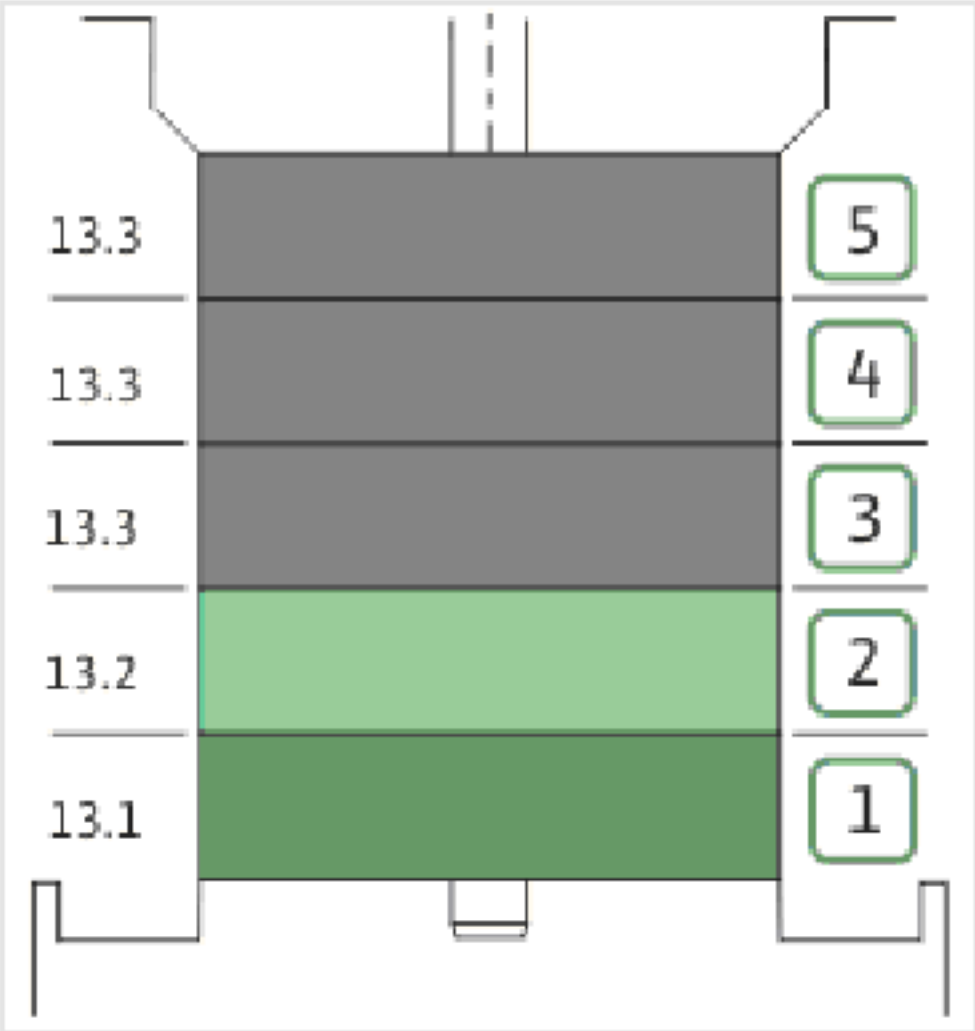
13.3
13.3
13.3
13.2
13.1
5
4
3
2
1

| Item | Article no. | Description | Quantity |
|---|---|---|---|
| 13.1 | 4157739 | FIRST STAGE HELIX 22 1.4307 KIT | 1 |
| | | > IMPELLER-H1-M+22-304 | 1 |
| | | > MACH.STG-CASING-WOGV-WNR-M+22-304 | 1 |
| 13.2 | 4157740 | BEARING STAGE HELIX 22 1.4307 KIT | 1 |
| | | > IMPELLER-H2-M+22-304 | 1 |
| | | > MACH.BEARING-STG-CASING-WNR-M+22-304 | 1 |
| | | > SHAFT-SLEEVE-D26xD22x16-CW | 1 |
| 13.3 | 4157743 | INTERMEDIATE STAGE HELIX 22 KIT | 1 |
| | | > MACH.STD-STG-CASING-WGV+NR-M+22-304 | 1 |
| | | > IMPELLER-H2-M+22-304 | 1 |

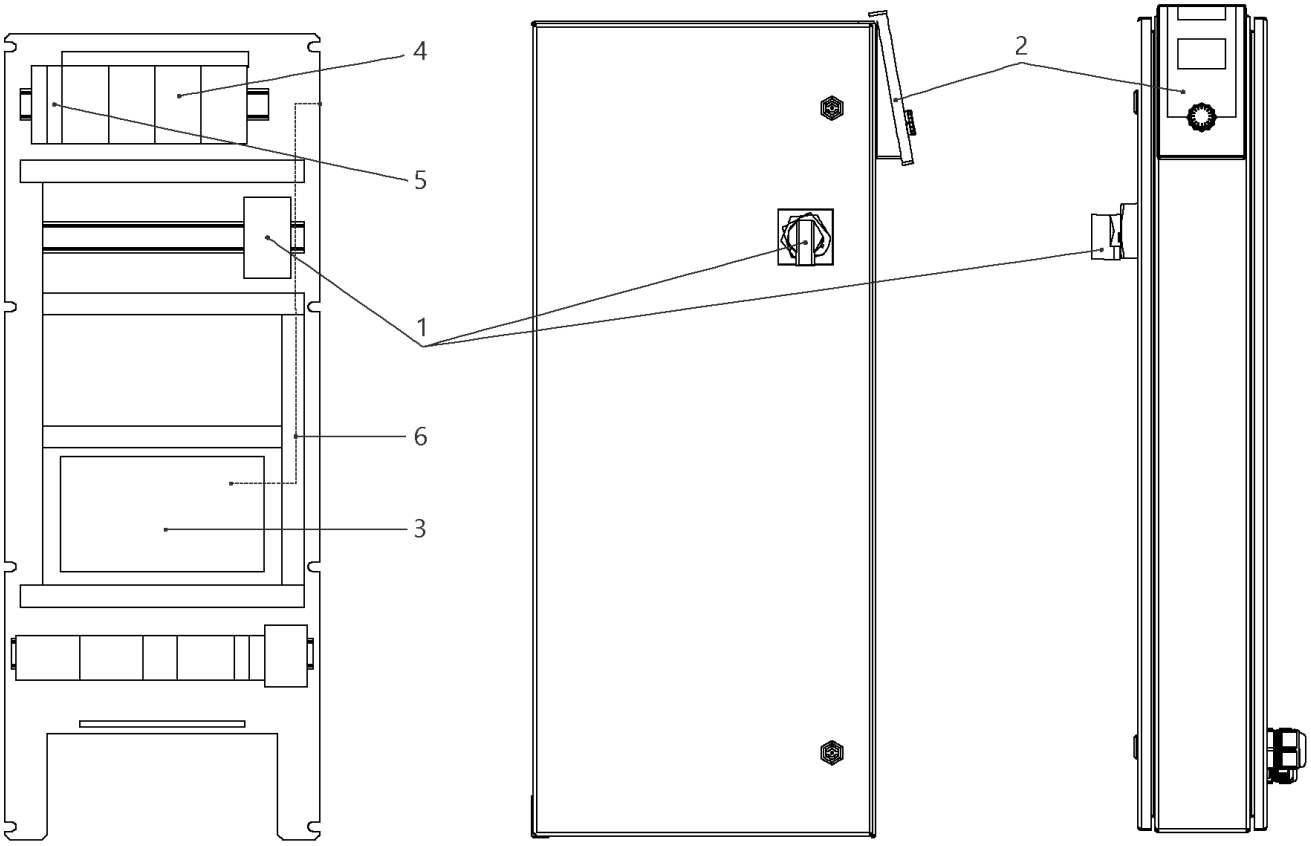
4
5
1
6
3
2

## W-CTRL-SCE-B-3x24A-T34-FM-ND4-AVC-PKG

| Item | Article no. | Description | Quantity |
|---|---|---|---|
| 1 | 2104465 | MAIN SWITCH OT100F3 L250 KIT | 1 |
| 2 | 4184784 | CONTROL PANEL HMI SC KIT | 1 |
| 2 | 4185259 | ASSEMBLY DISPLAY SC PKG VP. | 1 |
| Note: DISPLAY ALONE / PLATINE SEULE | | | |
| 3 | 4185257 | ASSEMBLY CPU SCe Booster VP. | 1 |
| 4 | 2051219 | AUTOM.CIRCUIT BREAKER S203 B32 FOR 15kW | 1 |
| 5 | 2046288 | CIRCUIT BREAKER S201 B16 | 1 |
| 6 | 4204004 | PATCH CABLE RJ45 CAT6 1,5M GREY SC-PANEL | 1 |

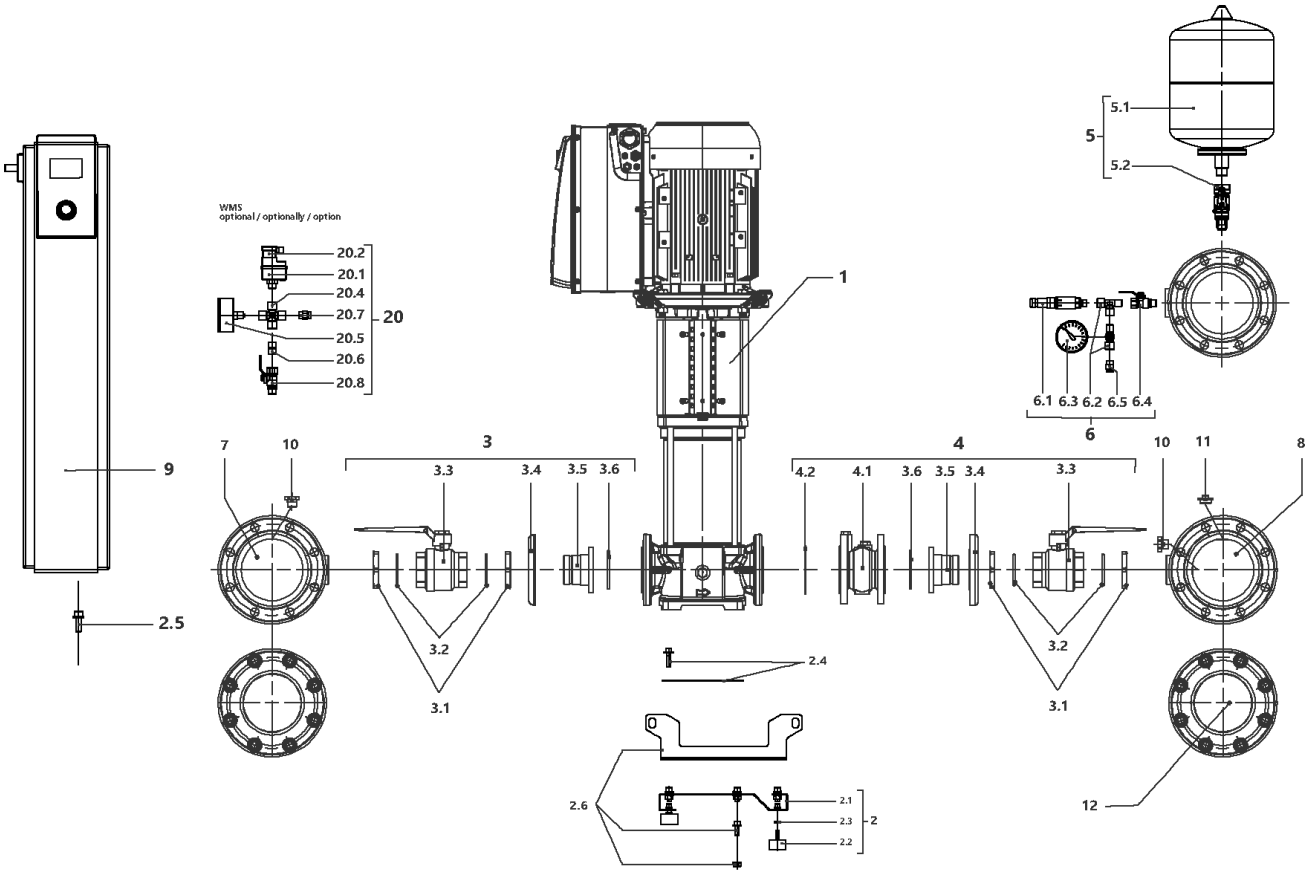
WMS
optional / optionally / option
20.2
20.1
20.4
20.7
20.5
20.6
20.8
20
1
5.1
5
5.2
6.1 6.3 6.2 6.5 6.4
6
9
7
10
3
3.3
3.4
3.5 3.6
4
4.2
4.1
3.6 3.5 3.4
3.3
10
11
8
2.5
3.2
3.1
2.4
3.2
3.1
2.6
2.1
2.3
2.2
2
12

## SiBoost Smart 3HELIX VE3602/5,5kW (2540917)

| Item | Article no. | Description | Quantity |
|---|---|---|---|
| 1 | | HELIX VE3602-5,5-4/16/E/S-FF240 | 1 |
| 2 | 4204907 | BASE PLATE DE3 1150x420 M10 KIT | 1 |
| 2.1 | | > BASEPLATE_3x4/6/10/16V_E300_BOX_150 | 1 |
| 2.2 | 2027881 | > VIBRATION DAMPER M.10X20 D.70 | 1 |
| 2.3 | 2028281 | > NUT M10 DIN936 (ISO4035) 17H VZ | 1 |
| 2.4 | 4204891 | > HOLDER PUMP Siboost Smart V36/52 KIT | 1 |
| 2.5 | 4197084 | > HOLDER SWITCHBOX WILO Smart Control KIT | 1 |
| 2.6 | 4203979 | > LIFTING Siboost HELIX 22/36 KIT | 1 |
| 3 | 4204892 | SUCTION SIDE Siboost Helix 36 KIT | 1 |
| 3.1 | 2027123 | > NUT G2½ X15 MS | 1 |
| 3.2 | 2025969 | > O-RING ID.72,39x5,33 EPDM 70SHORE | 1 |
| 3.2 | | > VALVE-BS-2"1/2-F/F-PS25-BRASS-NICK-ACS | 1 |
| 3.4 | 2032973 | > LAPPED FLANGE DN65 1.4301 DIN2642P | 1 |
| 3.5 | | > UNION INSERT DN65-G21/2" FLANGE AISI304 | 1 |
| 3.6 | 2028296 | > O-RING ID.91,44x5,33 EPDM 70SHORE | 1 |
| 4 | 4204894 | DELIVERY SIDE Siboost Helix 36 KIT | 1 |
| 3.1 | 2027123 | > NUT G2½ X15 MS | 1 |
| 3.2 | 2025969 | > O-RING ID.72,39x5,33 EPDM 70SHORE | 1 |
| 3.3 | | > VALVE-BS-2"1/2-F/F-PS25-BRASS-NICK-ACS | 1 |
| Note: accessories see price list/Zubehör siehe | | | |
| 3.4 | 2032973 | > LAPPED FLANGE DN65 1.4301 DIN2642P | 1 |
| 3.5 | | > UNION INSERT DN65-G21/2" FLANGE AISI304 | 1 |
| Note: accessories see price list/Zubehör siehe | | | |
| 3.6 | 2028296 | > O-RING ID.91,44x5,33 EPDM 70SHORE | 1 |
| 4.1 | 2127586 | > NON RETURN VALVE DN65 PN16 TYP402B VP. | 1 |
| 4.2 | 2119912 | > GASKET D.77/127X2 DN65 C4430 VP. | 1 |
| 5 | 4203983 | DIAPHREM TANK 8L/PN16 DIN4807/T5 KIT | 1 |
| 5.1 | 2045914 | > DIAPHREM TANK 8L TYP-DD 16BAR | 1 |
| 5.2 | 4189350 | > FLOW FITTING G3/4 FOR DIAPHRAG VESSEL VP | 1 |
| 6 | 4197076 | PRESSURE SENSOR/ GAUGE 0-16BAR KIT | 1 |
| 6.1 | 2085909 | > PRESS.SENSOR 1/4" 0-16BAR 4-20MA VP. | 1 |
| 6.2 | 4197077 | > T-PIECE 1/4" VP. | 1 |
| 6.3 | 2028692 | > PRESSURE GAUGE NG63-PN16-G1/4 | 1 |
| 6.4 | 2028291 | > BALL TAP R1/4" PN42 GIACOMINI R254DL | 1 |

| Item | Article no. | Description | Quantity |
|---|---|---|---|
| 6.5 | 2028691 | > BLOWGUN 1/4" MS 30BAR VP. | 1 |
| 7 | 4204908 | PIPE DE3 DN125-3x21/2"+3x1/4x1100 VP. | 1 |
| 8 | 4204909 | PIPE DE3 DN125-3x21/2"+2x1/4+1x3/4x1100 | 1 |
| 9 | | W-CTRL-SCE-B-3x13A-T34-FM-ND2-AVC-PKG | 1 |
| 10 | 4197079 | PLUG G1/4"x10 AISI304 KIT | 1 |
| 11 | 2032654 | PLUG R3/4" MS VIEGA 1751 | 1 |
| 12 | 4203993 | BLIND-FLANGE DN125 PN10/16-A2 KIT | 1 |
| | 4203994 | > FLAT GASKET D.120/162X2 DN125 FIBRE VP. | 1 |
| | 2094573 | > NUT M16 DIN934 A2 1.4301 VP. | 1 |
| | 2107590 | > SCREW M16x70 DIN933 A2 (8 PIECES) | 1 |
| | 2094572 | > WASHER A17 DIN125 A2 1.4301 VP. | 1 |
| | | > FULL FLANGE ST.DN100 PN16 EN1092-1/05 A2 | 1 |
| | | > FLANGE COVER DN125 DIN 3443 FORM A | 1 |
| 20 | | ASSEMBLY WMS. DE-EB. +VP | 1 |
| 20.1 | 2028652 | > PRESSURE SWITCH PS3-ASR 1/(1,3) VP. | 1 |
| 20.2 | 2130983 | > PLUG PS3-415 WITH KABEL 1,5M 2NO VP. | 1 |
| 20.4 | 2028290 | > CROSSPIECE R1/4" MS-NICKEL | 1 |
| 20.5 | 2028687 | > PRESSURE GAUGE NG63 R1/4" HI.0-6BAR | 1 |
| 20.6 | 2054268 | > DUAL NIPPLE G1/4" x G1/4" MS VP. | 1 |
| 20.7 | 2028691 | > BLOWGUN 1/4" MS 30BAR VP. | 1 |
| 20.8 | 2028291 | > BALL TAP R1/4" PN42 GIACOMINI R254DL | 1 |

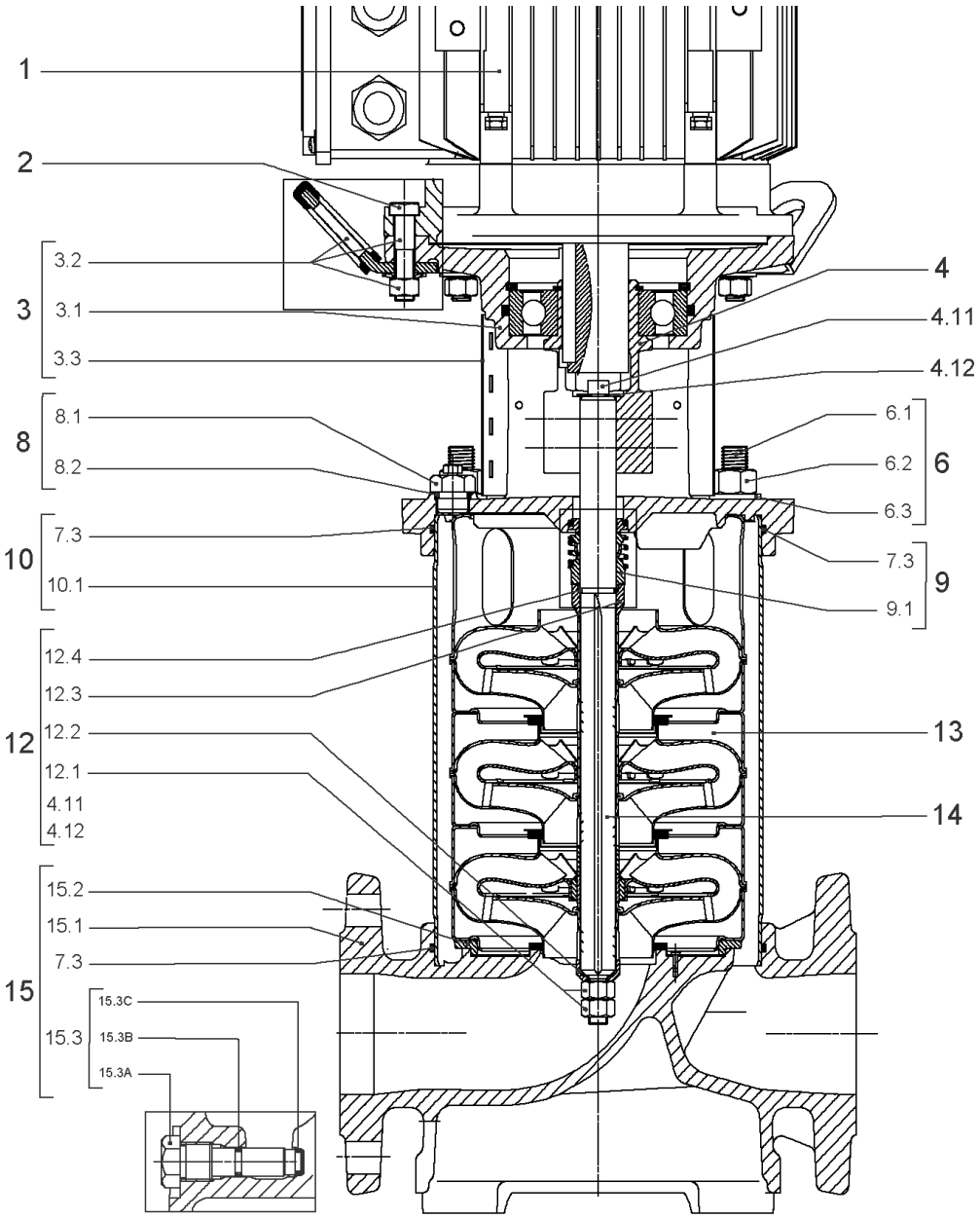
1
2
3
3.2
3.1
3.3
8
8.1
8.2
10
7.3
10.1
12
12.4
12.3
12.2
12.1
4.11
4.12
15
15.2
15.1
7.3
15.3
15.3C
15.3B
15.3A
4
4.11
4.12
6
6.1
6.2
6.3
9
7.3
9.1
13
14

| Item | Article no. | Description | Quantity |
|---|---|---|---|
| 1 | | DRIVE HELIX-VE3602-FF240-IE2-ATB KIT | 1 |
| Note: MOTOR BRAND ATB | | | |
| 1 | | DRIVE HELIXVE3602-5Kw-FF240 IE4-WE KIT | 1 |
| Note: MOTOR BRAND WILO ELEC | | | |
| | | SPARE PARTS MOTOR:ON REQUEST | 1 |
| 2 | 4174093 | SCREW M12X50 (4 PIECES) | 1 |
| 3 | 4186358 | LANTERN HELIX OPTI 8" FF240 KIT | 1 |
| 3.1 | | > M+8_LANTERN_ONE-PIECE_FF240_CATA_DWA | 1 |
| 3.2 | 4186346 | > EYELET CPL.FF240 HELIX (4 PIECES) | 1 |
| 3.3 | 4184853 | > COUPLING PROTECTOR FT HELIX 8'' KIT | 1 |
| 4 | 4186347 | COUPLING D.22XD.38 FF240T130 HELIX KIT | 1 |
| 6 | 4181156 | STUD BOLT M16X233 KIT | 1 |
| 6.1 | | > TIE BOLT M16-233x24x44-1.4057 | 1 |
| 6.2 | 4179562 | > NUT M16 8.8 ISO4032 (4 PIECES) | 1 |
| 6.3 | 4097852 | > WASHER-CS-16.4-32-2.8-NFE25-511-A2 | 1 |
| 8 | 4186377 | FILING/PURGING PLUG 304 HELIX KIT | 1 |
| 8.1 | | > FILLING/VENTING-PLUG-MVI8/10"-304 | 1 |
| 8.2 | 4032291 | > O-RING 17x3 EPDM KTW/WRC | 1 |
| 9 | 4192148 | SEAL-KIT-HELIX22-36-52 FIRST O/E | 1 |
| 7.3 | 4179571 | > O-RING HOUSING PIPE HELIX22/36/52 VP. | 1 |
| 9.1 | 4179573 | > M.SEAL.HELIX22-36-52 O/E VP. | 1 |
| 10 | 4181070 | HOUSING PIPE D.204X197 1.4307 KIT | 1 |
| 7.3 | 4179571 | > O-RING HOUSING PIPE HELIX22/36/52 VP. | 1 |
| 10.1 | | > HOUSING-PIPE Ø204-M+3602-304 | 1 |
| 12 | 4186374 | SHAFT EQUIPMENT HELIX 36 FIRST KIT | 1 |
| 13 | | HYDRAULIC HELIX V 3602 | 1 |
| 14 | 4186343 | SHAFT D.22X301 1.4057 VP. | 1 |
| 15 | 4186381 | EQUIPED HOUSING HELIX OPTI DN65 GJL KIT | 1 |
| 15.1 | | > PUMP CASING MONO.M+8" DN65 PN16 DWA | 1 |
| 15.2 | | > HYD.SUP.M+8" MONO.HOUSING DN65 DWA | 1 |
| 15.3 | 4106048 | > DRAIN/PRIMING PLUG EPDM HELIX FIRST KIT | 1 |
| 15.3A | | >> DRAIN AND PRIMING PLUG-VMI10"-304 | 1 |
| 15.3B | 4032293 | >> O-RING-10x3-EPDM-KTW/WRC | 1 |
| 15.3C | 4233957 | >> O-RING ID.9 EPDM VP. | 1 |

| Item | Article no. | Description | Quantity |
|---|---|---|---|
| 7.3 | 4179571 | > O-RING HOUSING PIPE HELIX22/36/52 VP. | 1 |
| 13.1A | 4161200 | > NECK RING 1.STAGE HELIX V36/52 KIT | 1 |
| | | >> NECK-RING-M+36/52 | 1 |
| | | >> HYDRAULIC SUPPORT CAP M+36/52 304 | 1 |
| | | >> SCREW TCL M3X8 A4 POZIDRIV | 1 |

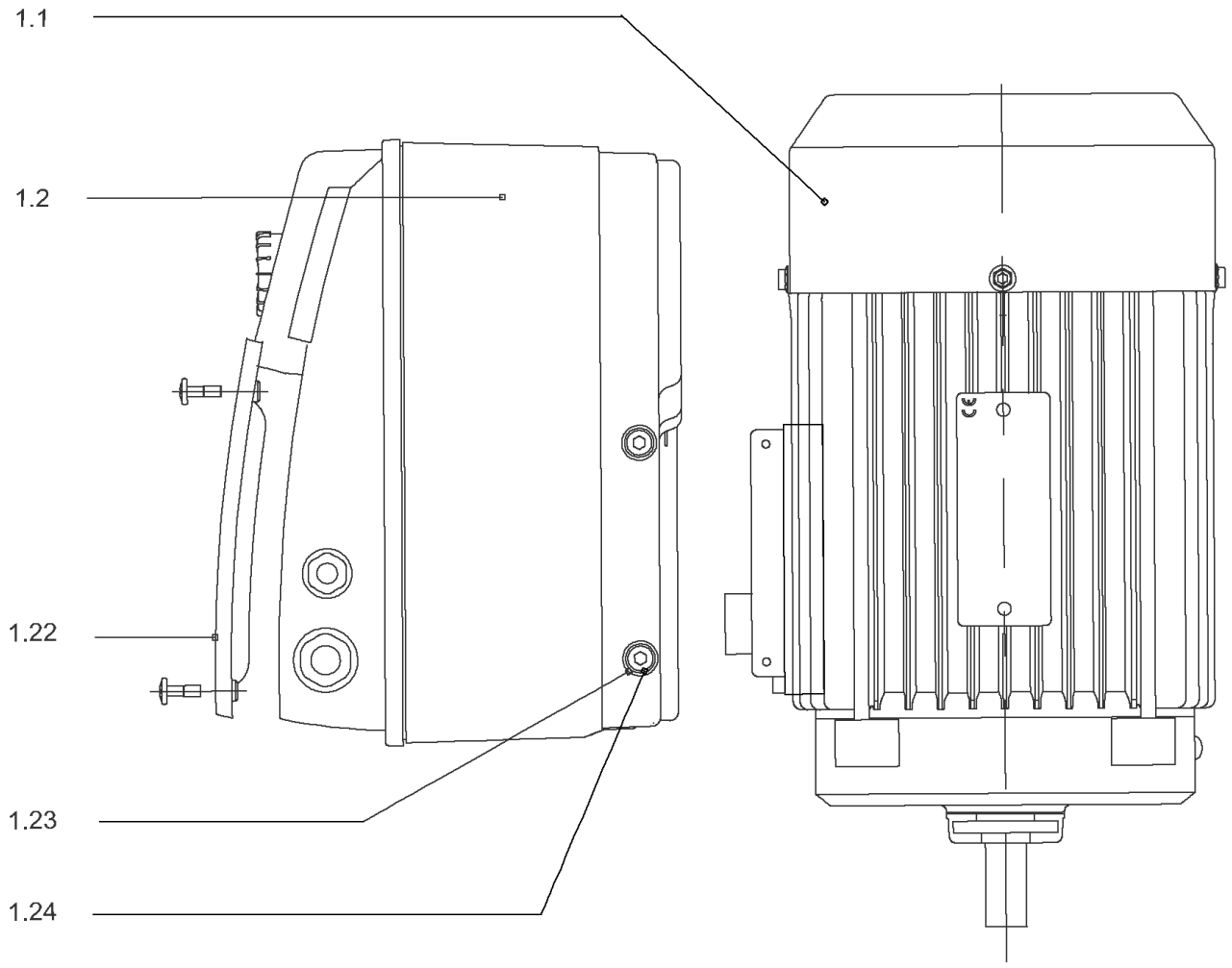
1.1
1.2
1.22
1.23
1.24

## DRIVE HELIX-VE3602-FF240-IE2-ATB KIT

| Item | Article no. | Description | Quantity |
|---|---|---|---|
| 1.1 | | MOTOR 5,5/2/132 FF240 T400V 50HZ IE2 VP | 1 |
| Note: no longer available/nicht mehrlieferbar/n'est plus disponible | | | |
| | | SPARE PARTS MOTOR:ON REQUEST | 1 |
| 1.2 | 4186773 | MODULE HELIX-VE3602-IE2-ATB KIT | 1 |
| 1.22 | 2111344 | > MODULE COVER/GASKET TL5 KIT | 1 |
| 1.23 | 4215716 | > SCREW M5X16 DIN912 8.8 A2A (4pieces) VP. | 1 |
| 1.24 | 2057978 | > RONDELLE A5,3 DIN6797 FST ZN (4 PIECES) | 1 |

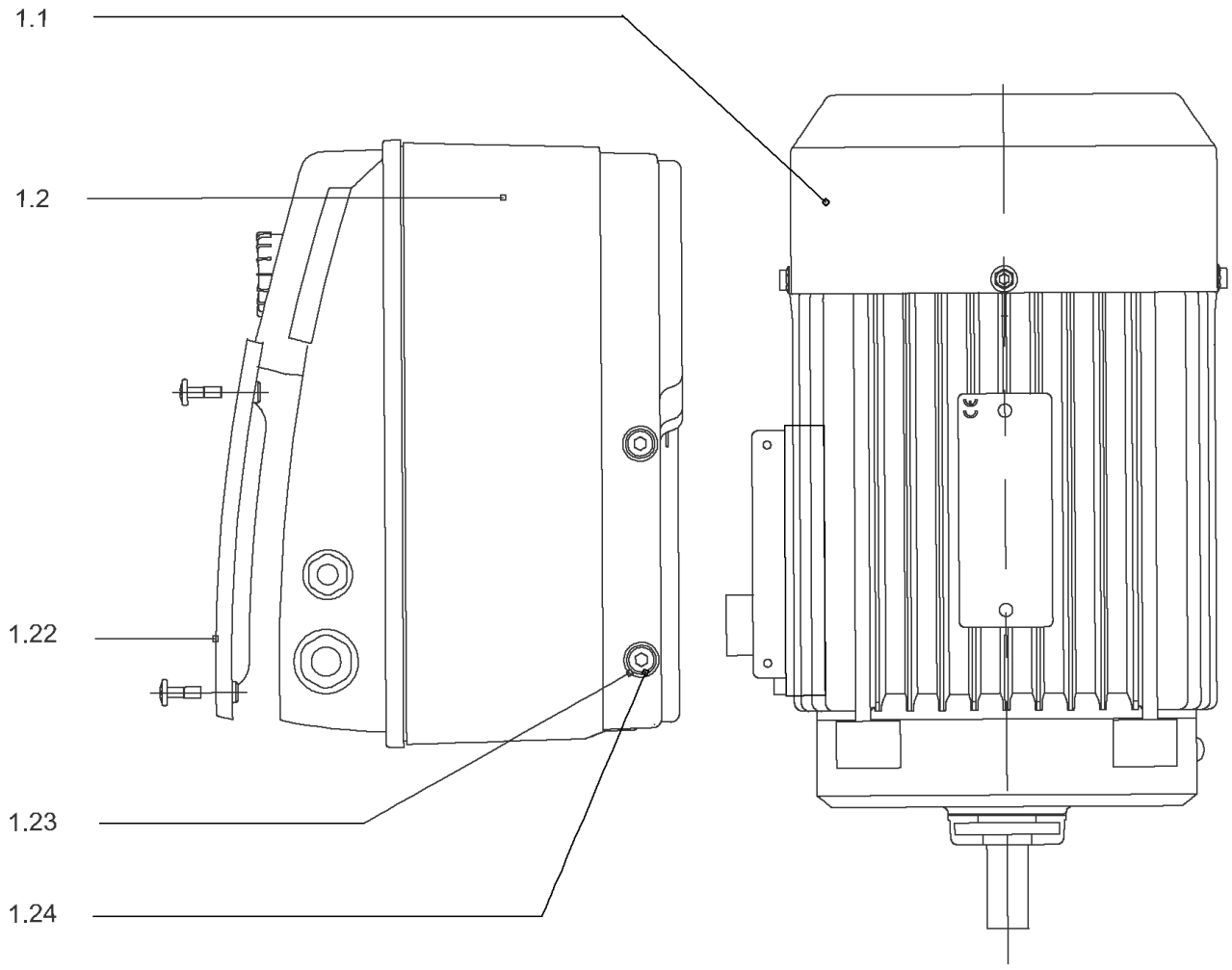
1.1
1.2
1.22
1.23
1.24

## DRIVE HELIXVE3602-5Kw-FF240 IE4-WE KIT

| Item | Article no. | Description | Quantity |
|---|---|---|---|
| 1.1 | 4207928 | MO.5.5/2/132FF240 3~400V 50Hz IE4 WE VP. | 1 |
| | | SPARE PARTS MOTOR:ON REQUEST | 1 |
| 1.2 | 4212635 | MODULE HELIX-VE3602-IE4-WE KIT | 1 |
| 1.22 | 2111344 | > MODULE COVER/GASKET TL5 KIT | 1 |
| 1.23 | 4215716 | > SCREW M5X16 DIN912 8.8 A2A (4pieces) VP. | 1 |
| 1.24 | 2057978 | > RONDELLE A5,3 DIN6797 FST ZN (4 PIECES) | 1 |

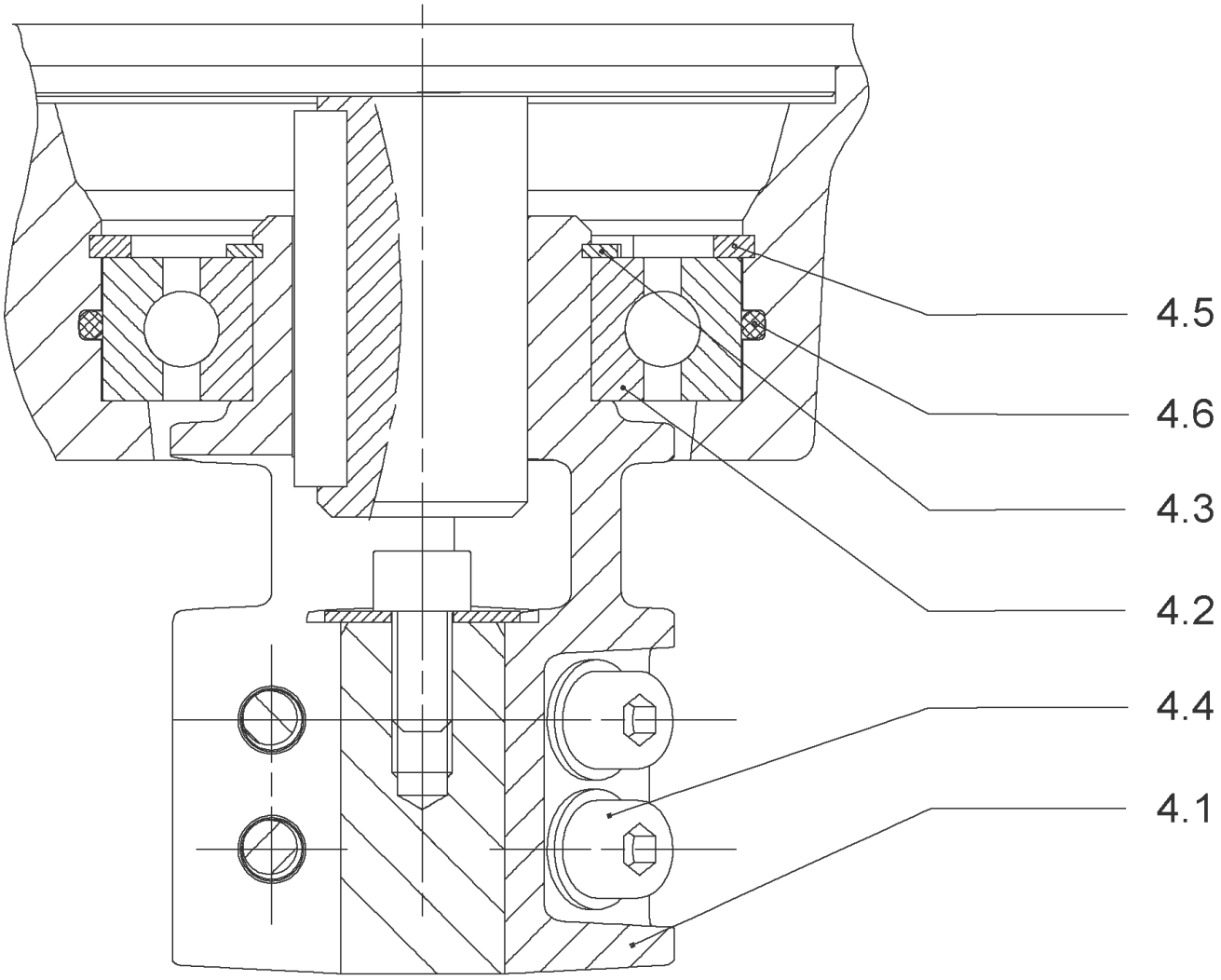
4.5
4.6
4.3
4.2
4.4
4.1

## COUPLING D.22XD.38 FF240T130 HELIX KIT (4186347)

| Item | Article no. | Description | Quantity |
|---|---|---|---|
| 4.1 | | COUPLING-VMI-D22xD38-FF265-MACHINED | 1 |
| 4.2 | 2131017 | BALL BEARING 6310/ZZ-C4(HT)VP. | 1 |
| 4.3 | 4234253 | CIRCLIP-FOR-SHAFT-D50x2 VP. | 1 |
| 4.4 | 4157726 | SCREW KIT M8X30 (4 PIECES) | 1 |
| 4.5 | 4234255 | CIRCLIPS 110X4 VP. | 1 |
| 4.6 | 4233944 | O-RING ID.110 VP. | 1 |
| | | NOMEL CONTACT WASHER 8x16x1,4 STEEL ZC | 1 |

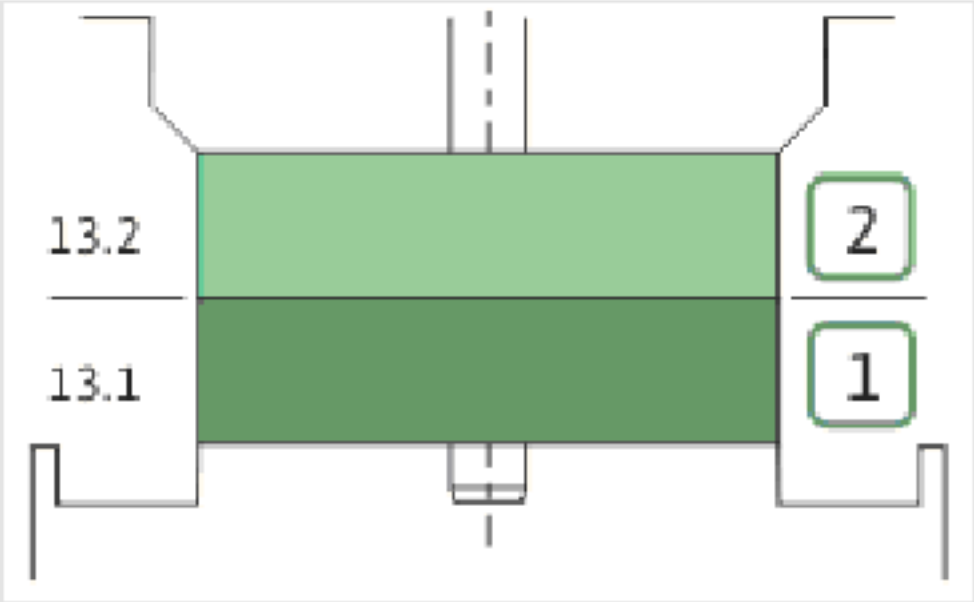
13.2
13.1
2
1

| Item | Article no. | Description | Quantity |
|---|---|---|---|
| 13.1 | 4161192 | INTERMEDIATE STAGE HELIX V36 1.4301 KIT | 1 |
| | | > SLEEVE-SPACER-D22XL16,66-316L | 1 |
| | | > MACH.BEARING-DIFFUSER+NR-M+36-304 | 1 |
| | | > SHAFT-SLEEVE-D26xD22x16-CW | 1 |
| | | > IMPELLER-H1-M+36-304 | 1 |
| 13.1A | 4161200 | > NECK RING 1.STAGE HELIX V36/52 KIT | 1 |
| | | >> NECK-RING-M+36/52 | 1 |
| | | >> HYDRAULIC SUPPORT CAP M+36/52 304 | 1 |
| | | >> SCREW TCL M3X8 A4 POZIDRIV | 1 |
| 13.2 | 4161194 | UPPER STAGE HELIX 36 1.4301 KIT | 1 |
| | | > STOP COLLAR OF IMPELLER L20-Ø22-316L | 1 |
| | | > IMPELLER-H4-M+36-304 | 1 |
| | | > MACH.-RIGID-STD-DISCH.-CHAMBER-M+36-304 | 1 |

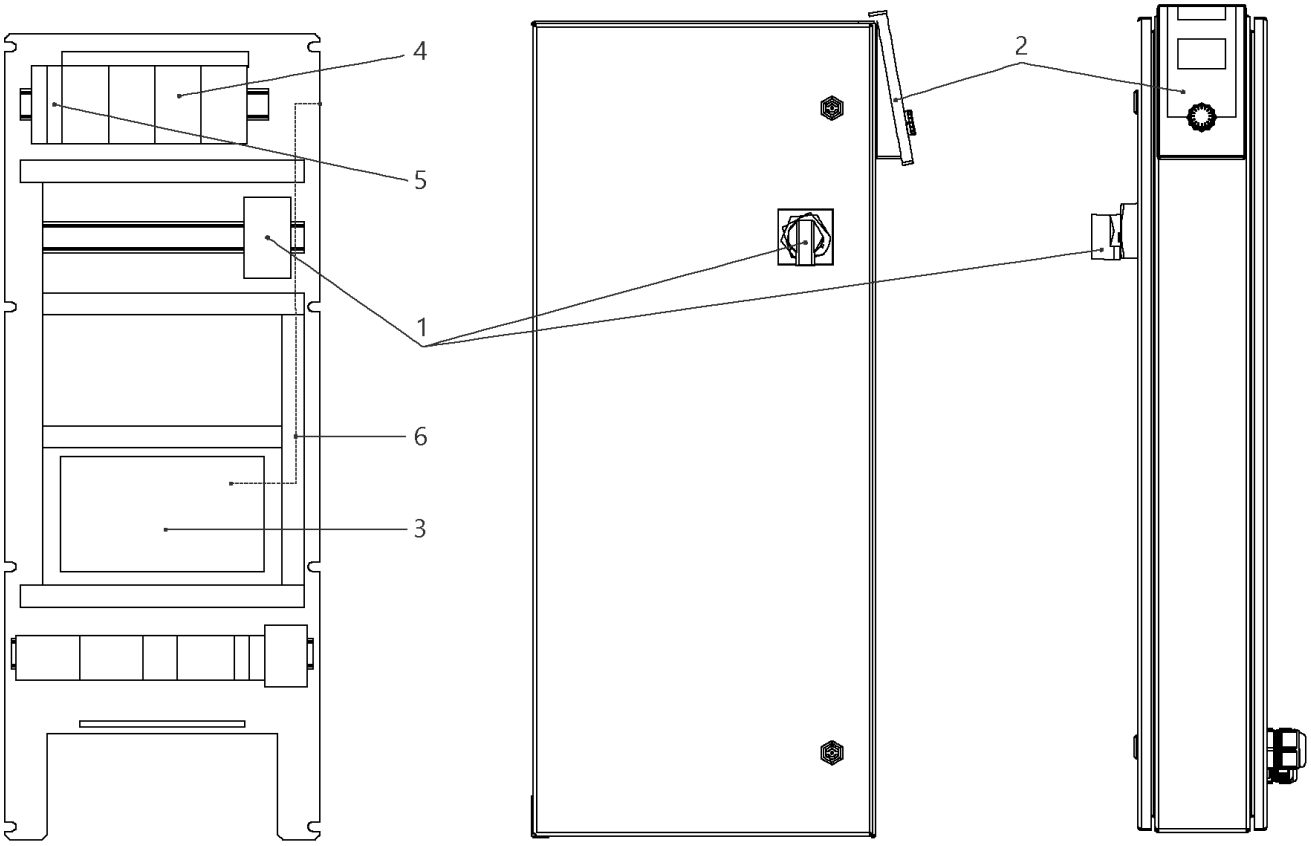
4
5
1
6
3
2

## W-CTRL-SCE-B-3x13A-T34-FM-ND2-AVC-PKG

| Item | Article no. | Description | Quantity |
|---|---|---|---|
| 1 | 2104473 | MAIN SWITCH OT63F3 L105 KIT | 1 |
| 2 | 4184784 | CONTROL PANEL HMI SC KIT | 1 |
| 2 | 4185259 | ASSEMBLY DISPLAY SC PKG VP. | 1 |
| Note: DISPLAY ALONE / PLATINE SEULE | | | |
| 3 | 4185257 | ASSEMBLY CPU SCe Booster VP. | 1 |
| 4 | 2051217 | AUTOM.CIRCUIT BREAKER S203 B16 TO7,5kW | 1 |
| 5 | 2046288 | CIRCUIT BREAKER S201 B16 | 1 |
| 6 | 4194956 | PATCH CABLE RJ45 CAT6 1,0M BLUE SC-PANEL | 1 |

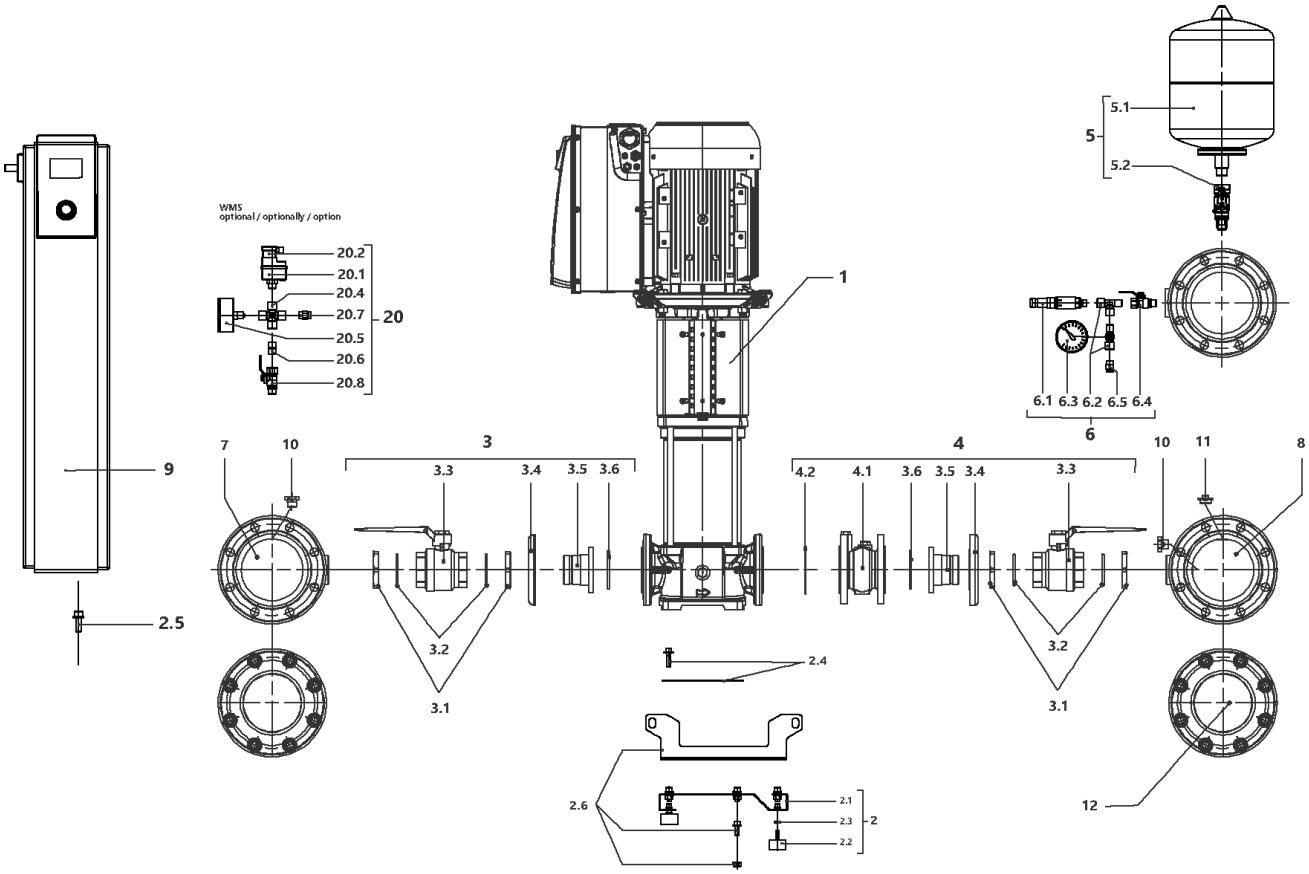
WMS
optional / optionally / option
20.2
20.1
20.4
20.7
20.5
20.6
20.8
20
1
5.1
5
5.2
6.1 6.3 6.2 6.5 6.4
6
9
7
10
3
3.3
3.4
3.5 3.6
4
4.2
4.1
3.6 3.5 3.4
3.3
10
11
8
2.5
3.2
3.1
2.4
3.2
3.1
2.6
2.1
2.3
2.2
2
12

## SiBoost Smart 3HELIX VE3602/7,5kW (2540918)

| Item | Article no. | Description | Quantity |
|---|---|---|---|
| 1 | | HELIX VE3602-7,5-4/16/E/S-FF240 | 1 |
| 2 | 4204907 | BASE PLATE DE3 1150x420 M10 KIT | 1 |
| 2.1 | | > BASEPLATE_3x4/6/10/16V_E300_BOX_150 | 1 |
| 2.2 | 2027881 | > VIBRATION DAMPER M.10X20 D.70 | 1 |
| 2.3 | 2028281 | > NUT M10 DIN936 (ISO4035) 17H VZ | 1 |
| 2.4 | 4204891 | > HOLDER PUMP Siboost Smart V36/52 KIT | 1 |
| 2.5 | 4197084 | > HOLDER SWITCHBOX WILO Smart Control KIT | 1 |
| 2.6 | 4203979 | > LIFTING Siboost HELIX 22/36 KIT | 1 |
| 3 | 4204892 | SUCTION SIDE Siboost Helix 36 KIT | 1 |
| 3.1 | 2027123 | > NUT G2½ X15 MS | 1 |
| 3.2 | 2025969 | > O-RING ID.72,39x5,33 EPDM 70SHORE | 1 |
| 3.2 | | > VALVE-BS-2"1/2-F/F-PS25-BRASS-NICK-ACS | 1 |
| 3.4 | 2032973 | > LAPPED FLANGE DN65 1.4301 DIN2642P | 1 |
| 3.5 | | > UNION INSERT DN65-G21/2" FLANGE AISI304 | 1 |
| 3.6 | 2028296 | > O-RING ID.91,44x5,33 EPDM 70SHORE | 1 |
| 4 | 4204894 | DELIVERY SIDE Siboost Helix 36 KIT | 1 |
| 3.1 | 2027123 | > NUT G2½ X15 MS | 1 |
| 3.2 | 2025969 | > O-RING ID.72,39x5,33 EPDM 70SHORE | 1 |
| 3.3 | | > VALVE-BS-2"1/2-F/F-PS25-BRASS-NICK-ACS | 1 |
| Note: accessories see price list/Zubehör siehe | | | |
| 3.4 | 2032973 | > LAPPED FLANGE DN65 1.4301 DIN2642P | 1 |
| 3.5 | | > UNION INSERT DN65-G21/2" FLANGE AISI304 | 1 |
| Note: accessories see price list/Zubehör siehe | | | |
| 3.6 | 2028296 | > O-RING ID.91,44x5,33 EPDM 70SHORE | 1 |
| 4.1 | 2127586 | > NON RETURN VALVE DN65 PN16 TYP402B VP. | 1 |
| 4.2 | 2119912 | > GASKET D.77/127X2 DN65 C4430 VP. | 1 |
| 5 | 4203983 | DIAPHREM TANK 8L/PN16 DIN4807/T5 KIT | 1 |
| 5.1 | 2045914 | > DIAPHREM TANK 8L TYP-DD 16BAR | 1 |
| 5.2 | 4189350 | > FLOW FITTING G3/4 FOR DIAPHRAG VESSEL VP | 1 |
| 6 | 4197076 | PRESSURE SENSOR/ GAUGE 0-16BAR KIT | 1 |
| 6.1 | 2085909 | > PRESS.SENSOR 1/4" 0-16BAR 4-20MA VP. | 1 |
| 6.2 | 4197077 | > T-PIECE 1/4" VP. | 1 |
| 6.3 | 2028692 | > PRESSURE GAUGE NG63-PN16-G1/4 | 1 |
| 6.4 | 2028291 | > BALL TAP R1/4" PN42 GIACOMINI R254DL | 1 |

| Item | Article no. | Description | Quantity |
|---|---|---|---|
| 6.5 | 2028691 | > BLOWGUN 1/4" MS 30BAR VP. | 1 |
| 7 | 4204908 | PIPE DE3 DN125-3x21/2"+3x1/4x1100 VP. | 1 |
| 8 | 4204909 | PIPE DE3 DN125-3x21/2"+2x1/4+1x3/4x1100 | 1 |
| 9 | | W-CTRL-SCE-B-3x16A-T34-FM-ND2-AVC-PKG | 1 |
| 10 | 4197079 | PLUG G1/4"x10 AISI304 KIT | 1 |
| 11 | 2032654 | PLUG R3/4" MS VIEGA 1751 | 1 |
| 12 | 4203993 | BLIND-FLANGE DN125 PN10/16-A2 KIT | 1 |
| | 4203994 | > FLAT GASKET D.120/162X2 DN125 FIBRE VP. | 1 |
| | 2094573 | > NUT M16 DIN934 A2 1.4301 VP. | 1 |
| | 2107590 | > SCREW M16x70 DIN933 A2 (8 PIECES) | 1 |
| | 2094572 | > WASHER A17 DIN125 A2 1.4301 VP. | 1 |
| | | > FULL FLANGE ST.DN100 PN16 EN1092-1/05 A2 | 1 |
| | | > FLANGE COVER DN125 DIN 3443 FORM A | 1 |
| 20 | | ASSEMBLY WMS. DE-EB. +VP | 1 |
| 20.1 | 2028652 | > PRESSURE SWITCH PS3-ASR 1/(1,3) VP. | 1 |
| 20.2 | 2130983 | > PLUG PS3-415 WITH KABEL 1,5M 2NO VP. | 1 |
| 20.4 | 2028290 | > CROSSPIECE R1/4" MS-NICKEL | 1 |
| 20.5 | 2028687 | > PRESSURE GAUGE NG63 R1/4" HI.0-6BAR | 1 |
| 20.6 | 2054268 | > DUAL NIPPLE G1/4" x G1/4" MS VP. | 1 |
| 20.7 | 2028691 | > BLOWGUN 1/4" MS 30BAR VP. | 1 |
| 20.8 | 2028291 | > BALL TAP R1/4" PN42 GIACOMINI R254DL | 1 |

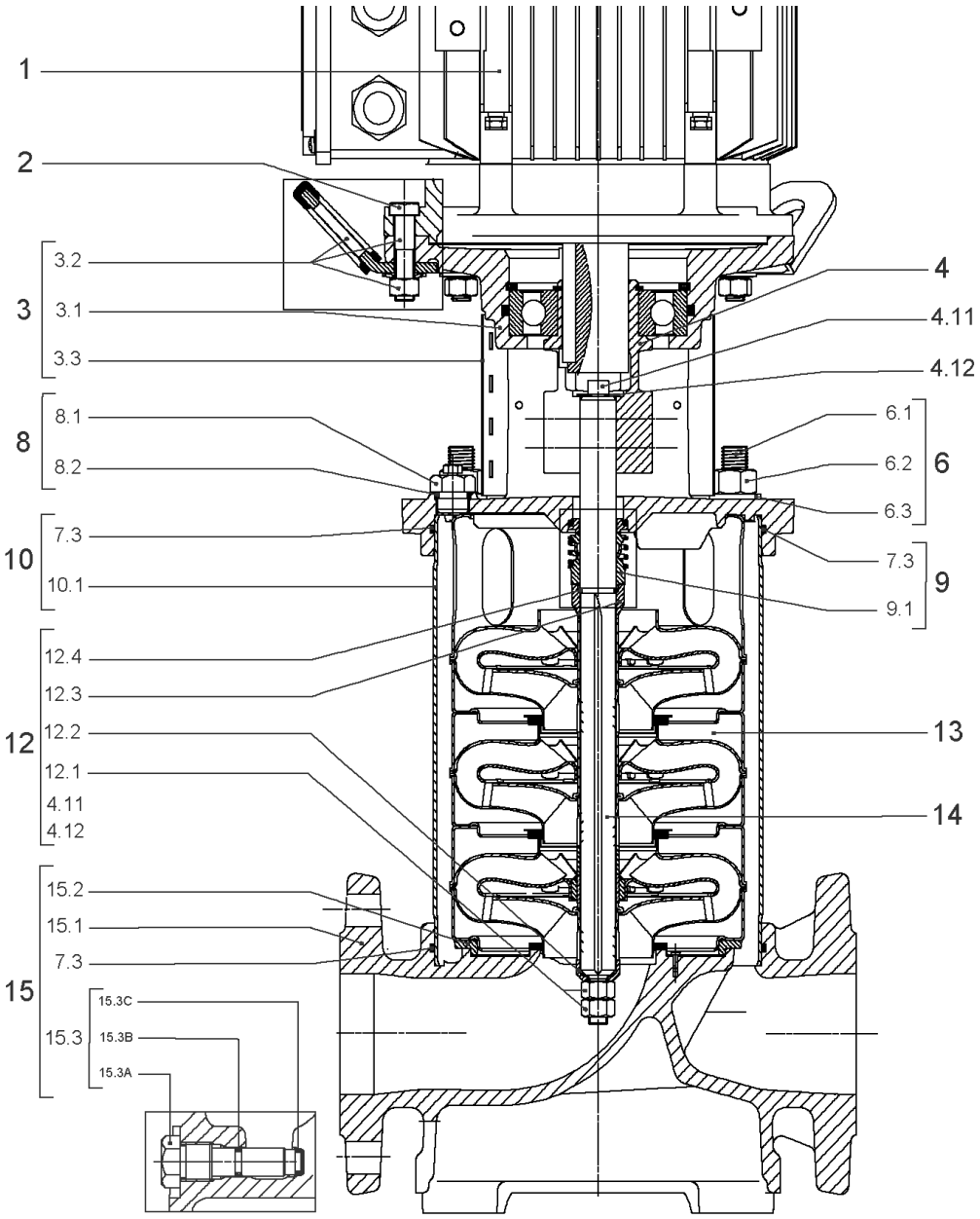
1
2
3
3.2
3.1
3.3
8
8.1
8.2
10
7.3
10.1
12
12.4
12.3
12.2
12.1
4.11
4.12
15
15.2
15.1
7.3
15.3
15.3C
15.3B
15.3A
4
4.11
4.12
6
6.1
6.2
6.3
9
7.3
9.1
13
14

| Item | Article no. | Description | Quantity |
|---|---|---|---|
| 1 | | DRIVE HELIX-VE3602-FF240-IE2-ATB KIT | 1 |
| Note: MOTOR BRAND ATB | | | |
| 1 | | DRIVE HELIXVE3602-7Kw-FF240 IE4-WE KIT | 1 |
| Note: MOTOR BRAND WILO ELEC | | | |
| | | SPARE PARTS MOTOR:ON REQUEST | 1 |
| 2 | 4174093 | SCREW M12X50 (4 PIECES) | 1 |
| 3 | 4186358 | LANTERN HELIX OPTI 8" FF240 KIT | 1 |
| 3.1 | | > M+8_LANTERN_ONE-PIECE_FF240_CATA_DWA | 1 |
| 3.2 | 4186346 | > EYELET CPL.FF240 HELIX (4 PIECES) | 1 |
| 3.3 | 4184853 | > COUPLING PROTECTOR FT HELIX 8'' KIT | 1 |
| 4 | 4186347 | COUPLING D.22XD.38 FF240T130 HELIX KIT | 1 |
| 6 | 4181156 | STUD BOLT M16X233 KIT | 1 |
| 6.1 | | > TIE BOLT M16-233x24x44-1.4057 | 1 |
| 6.2 | 4179562 | > NUT M16 8.8 ISO4032 (4 PIECES) | 1 |
| 6.3 | 4097852 | > WASHER-CS-16.4-32-2.8-NFE25-511-A2 | 1 |
| 8 | 4186377 | FILING/PURGING PLUG 304 HELIX KIT | 1 |
| 8.1 | | > FILLING/VENTING-PLUG-MVI8/10"-304 | 1 |
| 8.2 | 4032291 | > O-RING 17x3 EPDM KTW/WRC | 1 |
| 9 | 4192148 | SEAL-KIT-HELIX22-36-52 FIRST O/E | 1 |
| 7.3 | 4179571 | > O-RING HOUSING PIPE HELIX22/36/52 VP. | 1 |
| 9.1 | 4179573 | > M.SEAL.HELIX22-36-52 O/E VP. | 1 |
| 10 | 4181070 | HOUSING PIPE D.204X197 1.4307 KIT | 1 |
| 7.3 | 4179571 | > O-RING HOUSING PIPE HELIX22/36/52 VP. | 1 |
| 10.1 | | > HOUSING-PIPE Ø204-M+3602-304 | 1 |
| 12 | 4186374 | SHAFT EQUIPMENT HELIX 36 FIRST KIT | 1 |
| 13 | | HYDRAULIC HELIX V 3602 | 1 |
| 14 | 4186343 | SHAFT D.22X301 1.4057 VP. | 1 |
| 15 | 4186381 | EQUIPED HOUSING HELIX OPTI DN65 GJL KIT | 1 |
| 15.1 | | > PUMP CASING MONO.M+8" DN65 PN16 DWA | 1 |
| 15.2 | | > HYD.SUP.M+8" MONO.HOUSING DN65 DWA | 1 |
| 15.3 | 4106048 | > DRAIN/PRIMING PLUG EPDM HELIX FIRST KIT | 1 |
| 15.3A | | >> DRAIN AND PRIMING PLUG-VMI10"-304 | 1 |
| 15.3B | 4032293 | >> O-RING-10x3-EPDM-KTW/WRC | 1 |
| 15.3C | 4233957 | >> O-RING ID.9 EPDM VP. | 1 |

| Item | Article no. | Description | Quantity |
|---|---|---|---|
| 7.3 | 4179571 | > O-RING HOUSING PIPE HELIX22/36/52 VP. | 1 |
| 13.1A | 4161200 | > NECK RING 1.STAGE HELIX V36/52 KIT | 1 |
| | | >> NECK-RING-M+36/52 | 1 |
| | | >> HYDRAULIC SUPPORT CAP M+36/52 304 | 1 |
| | | >> SCREW TCL M3X8 A4 POZIDRIV | 1 |

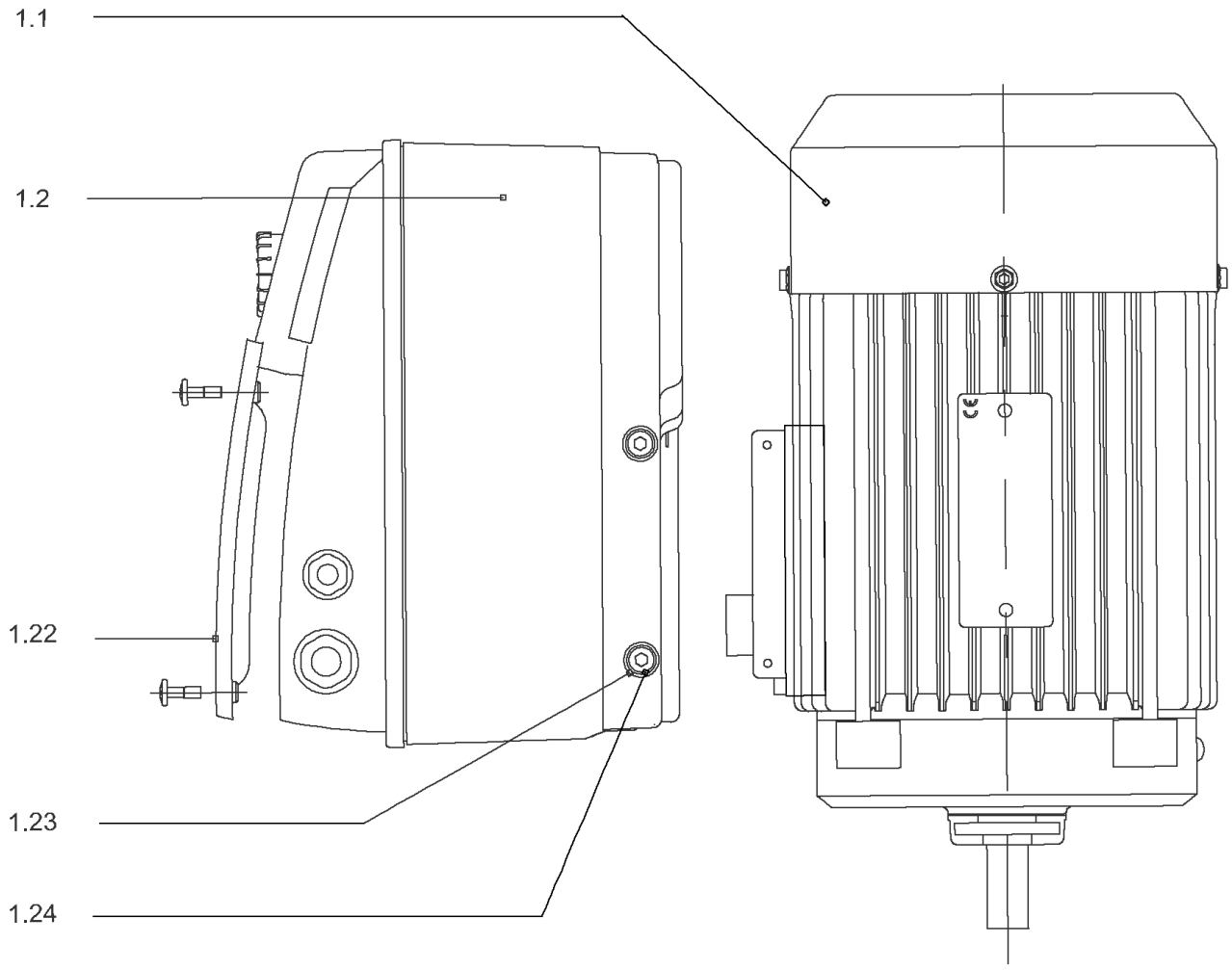
1.1
1.2
1.22
1.23
1.24

## DRIVE HELIX-VE3602-FF240-IE2-ATB KIT

| Item | Article no. | Description | Quantity |
|---|---|---|---|
| 1.1 | | MOTOR 7,5/2/132 FF240 3~380V 60HZ IE2 VP | 1 |
| Note: no longer available/nicht mehrlieferbar/n'est plus disponible | | | |
| | | SPARE PARTS MOTOR:ON REQUEST | 1 |
| 1.2 | 4195909 | MODULE HELIX-VE3602-7.5-IE2-ATB KIT | 1 |
| 1.22 | 2111344 | > MODULE COVER/GASKET TL5 KIT | 1 |
| 1.23 | 4215716 | > SCREW M5X16 DIN912 8.8 A2A (4pieces) VP. | 1 |
| 1.24 | 2057978 | > RONDELLE A5,3 DIN6797 FST ZN (4 PIECES) | 1 |

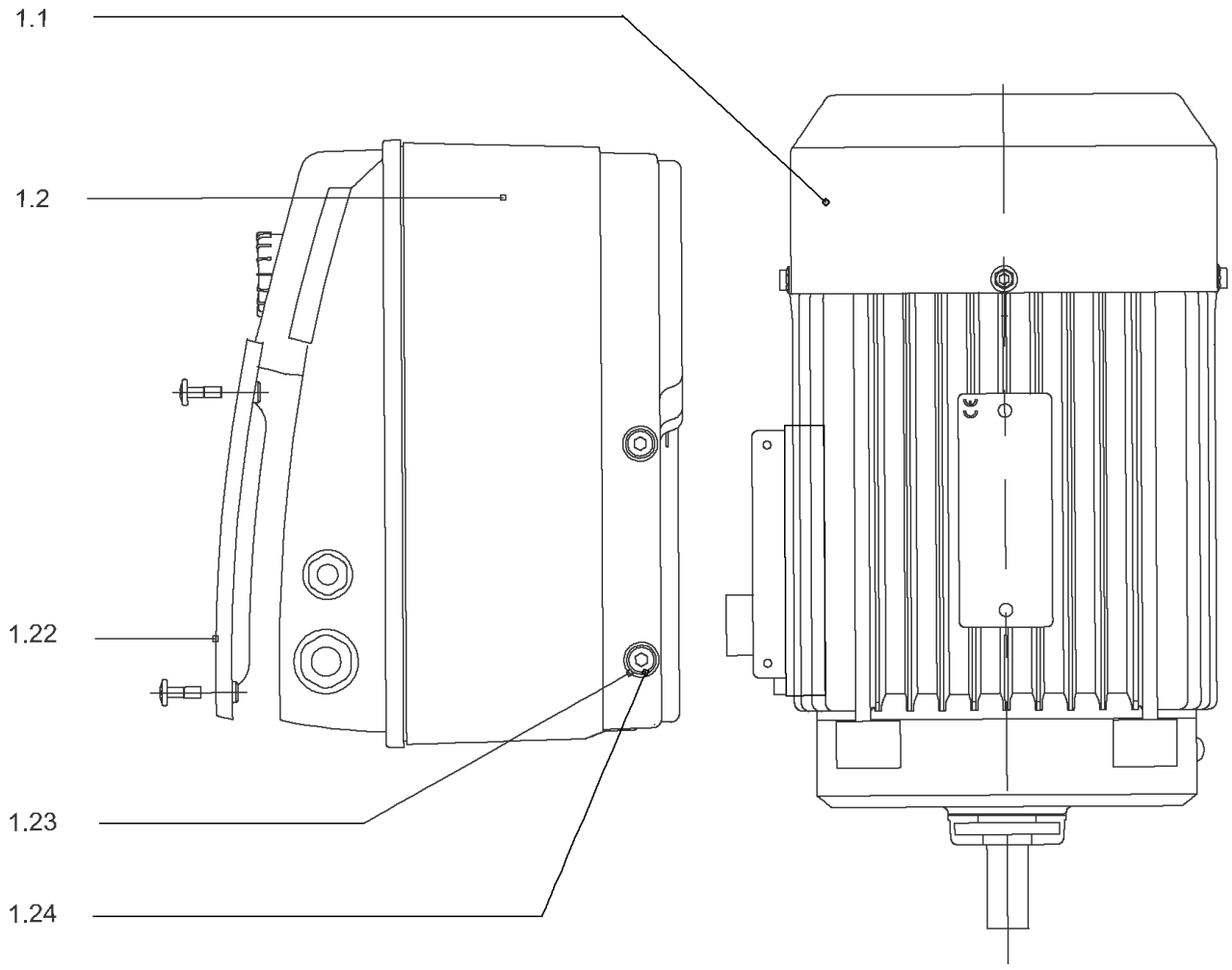
1.1
1.2
1.22
1.23
1.24

## DRIVE HELIXVE3602-7Kw-FF240 IE4-WE KIT

| Item | Article no. | Description | Quantity |
|---|---|---|---|
| 1.1 | 4207940 | MO.7.5/2/132FF240 3~380V 60Hz IE4 WE VP. | 1 |
| | | SPARE PARTS MOTOR:ON REQUEST | 1 |
| 1.2 | 4212640 | MODULE HELIX-VE3602-IE4-WE KIT | 1 |
| 1.22 | 2111344 | > MODULE COVER/GASKET TL5 KIT | 1 |
| 1.23 | 4215716 | > SCREW M5X16 DIN912 8.8 A2A (4pieces) VP. | 1 |
| 1.24 | 2057978 | > RONDELLE A5,3 DIN6797 FST ZN (4 PIECES) | 1 |

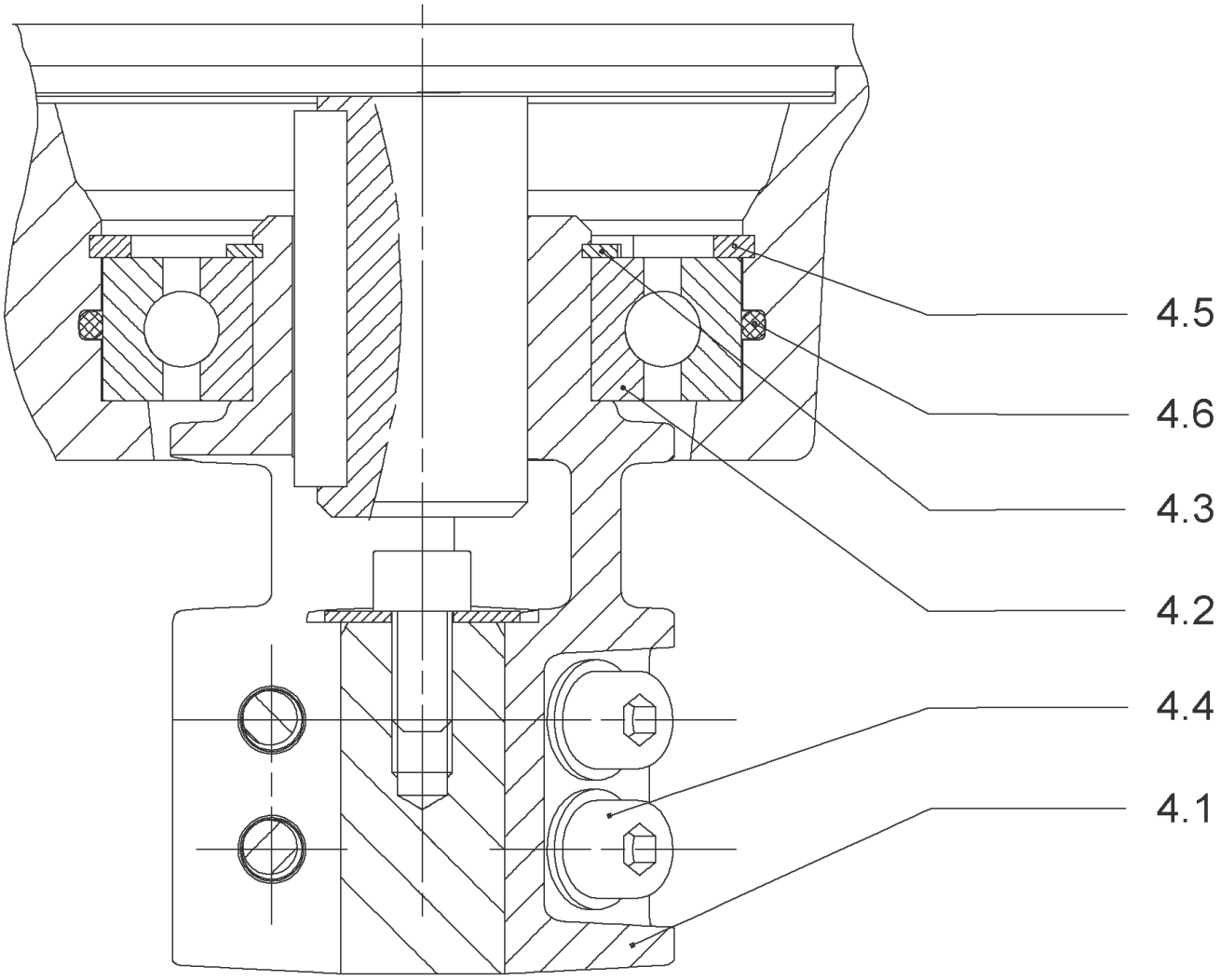
4.5
4.6
4.3
4.2
4.4
4.1

## COUPLING D.22XD.38 FF240T130 HELIX KIT (4186347)

| Item | Article no. | Description | Quantity |
|---|---|---|---|
| 4.1 | | COUPLING-VMI-D22xD38-FF265-MACHINED | 1 |
| 4.2 | 2131017 | BALL BEARING 6310/ZZ-C4(HT)VP. | 1 |
| 4.3 | 4234253 | CIRCLIP-FOR-SHAFT-D50x2 VP. | 1 |
| 4.4 | 4157726 | SCREW KIT M8X30 (4 PIECES) | 1 |
| 4.5 | 4234255 | CIRCLIPS 110X4 VP. | 1 |
| 4.6 | 4233944 | O-RING ID.110 VP. | 1 |
| | | NOMEL CONTACT WASHER 8x16x1,4 STEEL ZC | 1 |

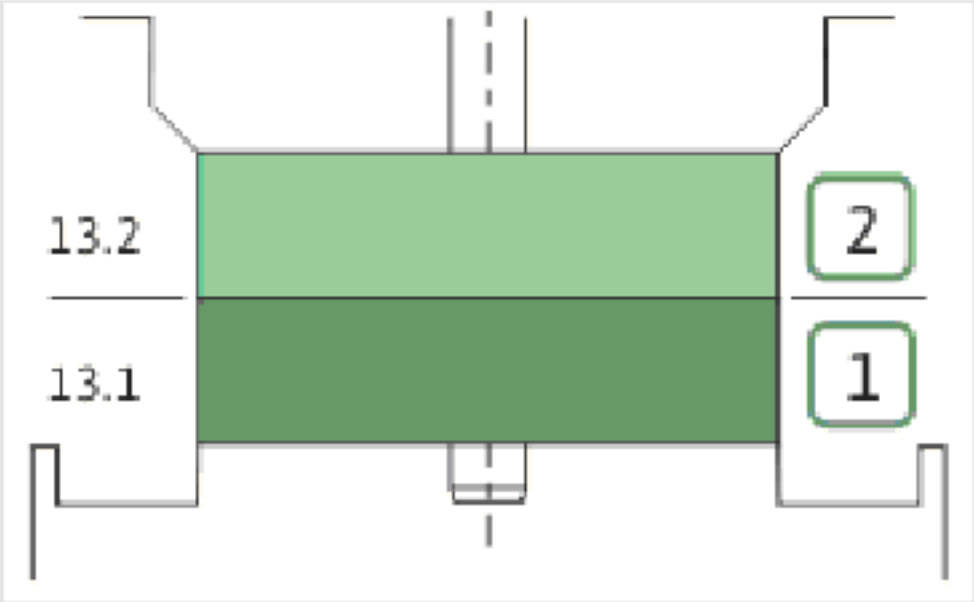
13.2
13.1
2
1

| Item | Article no. | Description | Quantity |
|---|---|---|---|
| 13.1 | 4161192 | INTERMEDIATE STAGE HELIX V36 1.4301 KIT | 1 |
| | | > SLEEVE-SPACER-D22XL16,66-316L | 1 |
| | | > MACH.BEARING-DIFFUSER+NR-M+36-304 | 1 |
| | | > SHAFT-SLEEVE-D26xD22x16-CW | 1 |
| | | > IMPELLER-H1-M+36-304 | 1 |
| 13.1A | 4161200 | > NECK RING 1.STAGE HELIX V36/52 KIT | 1 |
| | | >> NECK-RING-M+36/52 | 1 |
| | | >> HYDRAULIC SUPPORT CAP M+36/52 304 | 1 |
| | | >> SCREW TCL M3X8 A4 POZIDRIV | 1 |
| 13.2 | 4161194 | UPPER STAGE HELIX 36 1.4301 KIT | 1 |
| | | > STOP COLLAR OF IMPELLER L20-Ø22-316L | 1 |
| | | > IMPELLER-H4-M+36-304 | 1 |
| | | > MACH.-RIGID-STD-DISCH.-CHAMBER-M+36-304 | 1 |

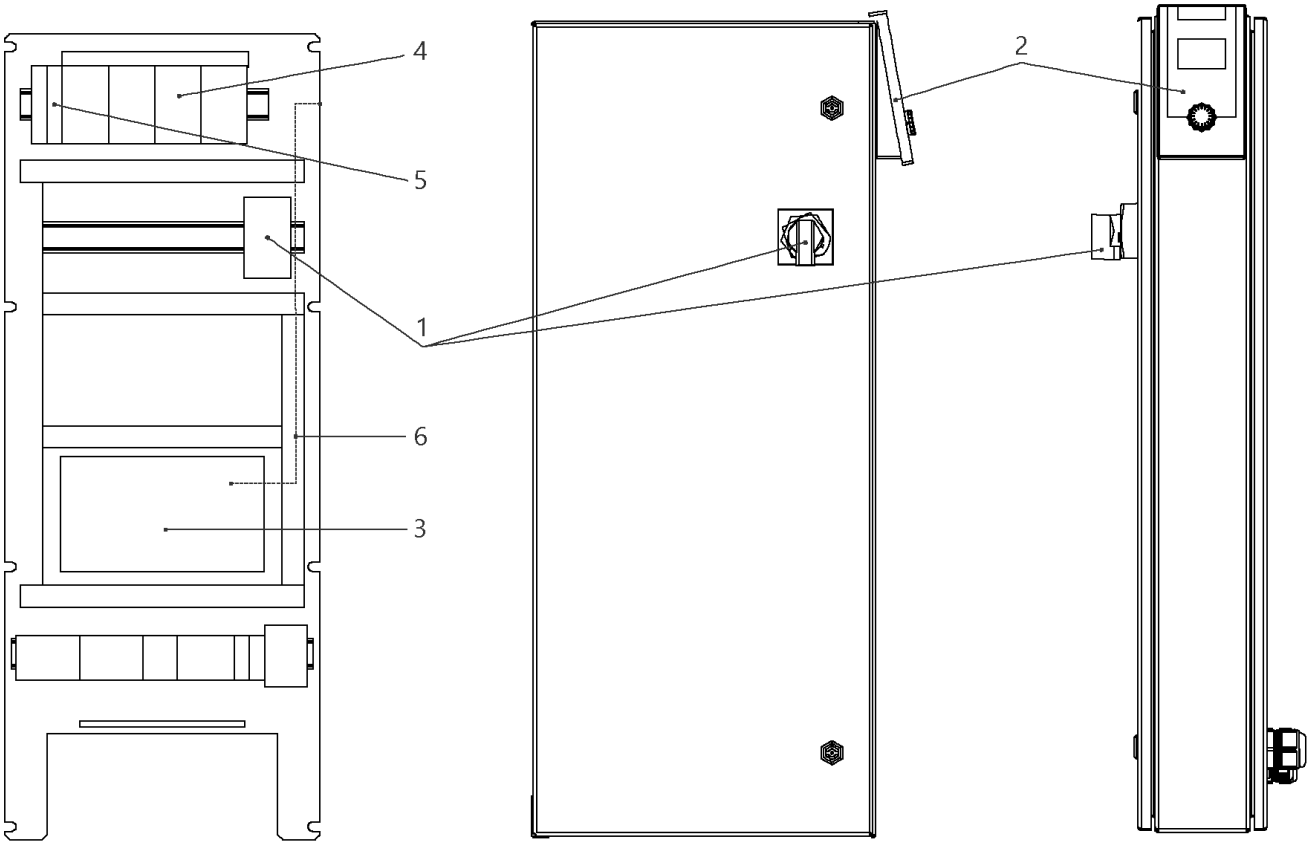
4
5
1
6
3
2

## W-CTRL-SCE-B-3x16A-T34-FM-ND2-AVC-PKG

| Item | Article no. | Description | Quantity |
|---|---|---|---|
| 1 | 2104473 | MAIN SWITCH OT63F3 L105 KIT | 1 |
| 2 | 4184784 | CONTROL PANEL HMI SC KIT | 1 |
| 2 | 4185259 | ASSEMBLY DISPLAY SC PKG VP. | 1 |
| Note: DISPLAY ALONE / PLATINE SEULE | | | |
| 3 | 4185257 | ASSEMBLY CPU SCe Booster VP. | 1 |
| 4 | 4197832 | AUTOMATIC CIRCUIT BREAKER S203 B20 VP. | 1 |
| 5 | 2046288 | CIRCUIT BREAKER S201 B16 | 1 |
| 6 | 4194956 | PATCH CABLE RJ45 CAT6 1,0M BLUE SC-PANEL | 1 |

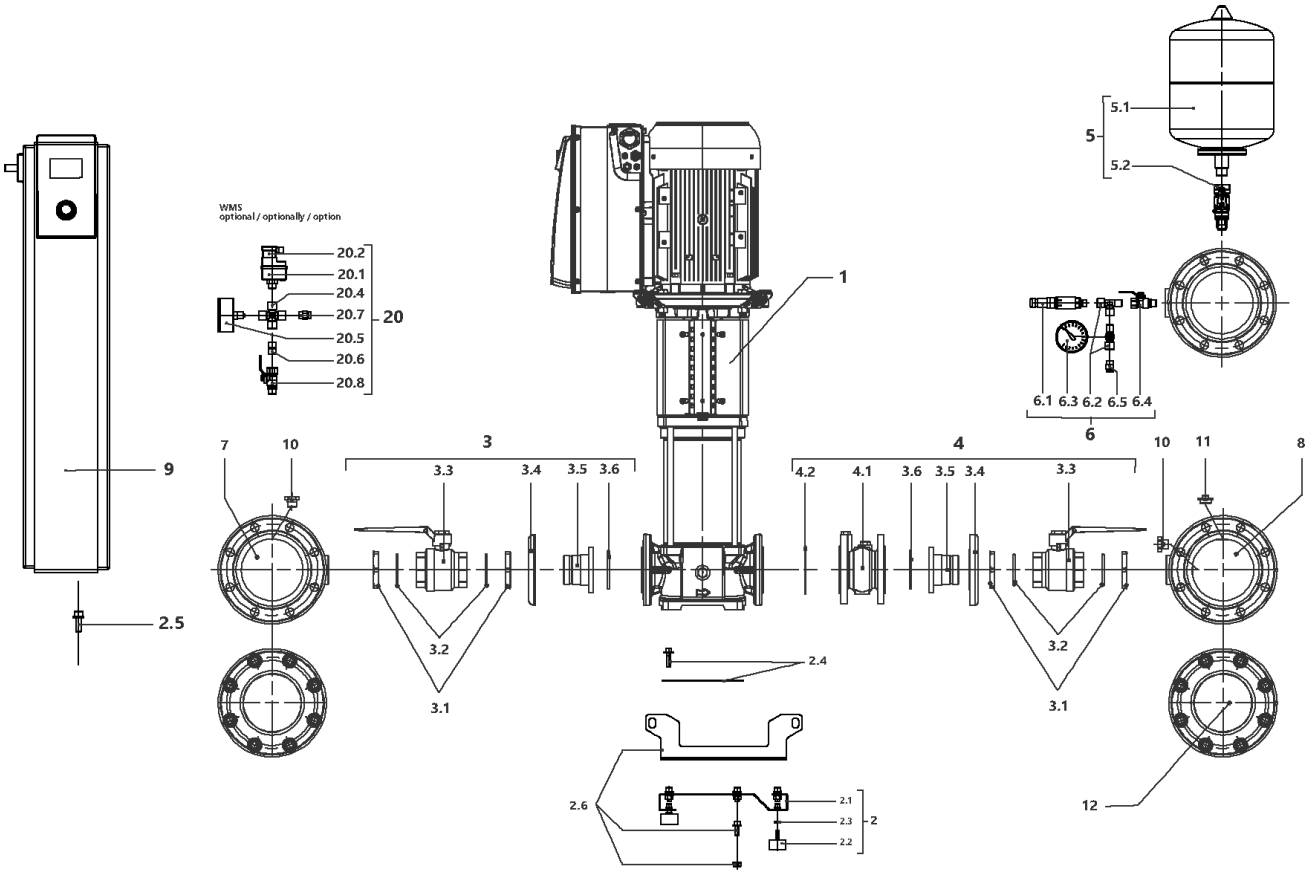
WMS
optional / optionally / option
20.2
20.1
20.4
20.7
20.5
20.6
20.8
20
1
5.1
5
5.2
6.1 6.3 6.2 6.5 6.4
6
9
7
10
3
3.3
3.4
3.5 3.6
4.2
4.1
3.6 3.5 3.4
4
10
11
8
2.5
3.2
3.1
2.4
2.6
2.1
2.3
2.2
2
12

## SiBoost Smart 3HELIX VE3604 (2540919)

| Item | Article no. | Description | Quantity |
|---|---|---|---|
| 1 | | HELIX VE3604-4/16/E/KS/2G | 1 |
| 2 | 4204910 | BASE PLATE DE3 1750x420 M10 KIT | 1 |
| 2.1 | | > BASE_FR_3x22/36/52V_E500_L400_BOX150-250 | 1 |
| 2.2 | 2027881 | > VIBRATION DAMPER M.10X20 D.70 | 1 |
| 2.3 | 2028281 | > NUT M10 DIN936 (ISO4035) 17H VZ | 1 |
| 2.4 | 4204891 | > HOLDER PUMP Siboost Smart V36/52 KIT | 1 |
| 2.5 | 4197084 | > HOLDER SWITCHBOX WILO Smart Control KIT | 1 |
| 2.6 | 4203979 | > LIFTING Siboost HELIX 22/36 KIT | 1 |
| 3 | 4204892 | SUCTION SIDE Siboost Helix 36 KIT | 1 |
| 3.1 | 2027123 | > NUT G2½ X15 MS | 1 |
| 3.2 | 2025969 | > O-RING ID.72,39x5,33 EPDM 70SHORE | 1 |
| 3.2 | | > VALVE-BS-2"1/2-F/F-PS25-BRASS-NICK-ACS | 1 |
| 3.4 | 2032973 | > LAPPED FLANGE DN65 1.4301 DIN2642P | 1 |
| 3.5 | | > UNION INSERT DN65-G21/2" FLANGE AISI304 | 1 |
| 3.6 | 2028296 | > O-RING ID.91,44x5,33 EPDM 70SHORE | 1 |
| 4 | 4204894 | DELIVERY SIDE Siboost Helix 36 KIT | 1 |
| 3.1 | 2027123 | > NUT G2½ X15 MS | 1 |
| 3.2 | 2025969 | > O-RING ID.72,39x5,33 EPDM 70SHORE | 1 |
| 3.3 | | > VALVE-BS-2"1/2-F/F-PS25-BRASS-NICK-ACS | 1 |
| Note: accessories see price list/Zubehör siehe | | | |
| 3.4 | 2032973 | > LAPPED FLANGE DN65 1.4301 DIN2642P | 1 |
| 3.5 | | > UNION INSERT DN65-G21/2" FLANGE AISI304 | 1 |
| Note: accessories see price list/Zubehör siehe | | | |
| 3.6 | 2028296 | > O-RING ID.91,44x5,33 EPDM 70SHORE | 1 |
| 4.1 | 2127586 | > NON RETURN VALVE DN65 PN16 TYP402B VP. | 1 |
| 4.2 | 2119912 | > GASKET D.77/127X2 DN65 C4430 VP. | 1 |
| 5 | 4203983 | DIAPHREM TANK 8L/PN16 DIN4807/T5 KIT | 1 |
| 5.1 | 2045914 | > DIAPHREM TANK 8L TYP-DD 16BAR | 1 |
| 5.2 | 4189350 | > FLOW FITTING G3/4 FOR DIAPHRAG VESSEL VP | 1 |
| 6 | 4197076 | PRESSURE SENSOR/ GAUGE 0-16BAR KIT | 1 |
| 6.1 | 2085909 | > PRESS.SENSOR 1/4" 0-16BAR 4-20MA VP. | 1 |
| 6.2 | 4197077 | > T-PIECE 1/4" VP. | 1 |
| 6.3 | 2028692 | > PRESSURE GAUGE NG63-PN16-G1/4 | 1 |
| 6.4 | 2028291 | > BALL TAP R1/4" PN42 GIACOMINI R254DL | 1 |

| Item | Article no. | Description | Quantity |
|---|---|---|---|
| 6.5 | 2028691 | > BLOWGUN 1/4" MS 30BAR VP. | 1 |
| 7 | 4204911 | PIPE DE3 DN125-3x21/2"+2x1/4x1500 VP. | 1 |
| 8 | 4204912 | PIPE DE3 DN125-3x21/2"+2x1/4+1x3/4x1500 | 1 |
| 9 | | W-CTRL-SCE-B-3x24A-T34-FM-ND4-AVC-PKG | 1 |
| 10 | 4197079 | PLUG G1/4"x10 AISI304 KIT | 1 |
| 11 | 2032654 | PLUG R3/4" MS VIEGA 1751 | 1 |
| 12 | 4203993 | BLIND-FLANGE DN125 PN10/16-A2 KIT | 1 |
| | 4203994 | > FLAT GASKET D.120/162X2 DN125 FIBRE VP. | 1 |
| | 2094573 | > NUT M16 DIN934 A2 1.4301 VP. | 1 |
| | 2107590 | > SCREW M16x70 DIN933 A2 (8 PIECES) | 1 |
| | 2094572 | > WASHER A17 DIN125 A2 1.4301 VP. | 1 |
| | | > FULL FLANGE ST.DN100 PN16 EN1092-1/05 A2 | 1 |
| | | > FLANGE COVER DN125 DIN 3443 FORM A | 1 |
| 20 | | ASSEMBLY WMS. DE-EB. +VP | 1 |
| 20.1 | 2028652 | > PRESSURE SWITCH PS3-ASR 1/(1,3) VP. | 1 |
| 20.2 | 2130983 | > PLUG PS3-415 WITH KABEL 1,5M 2NO VP. | 1 |
| 20.4 | 2028290 | > CROSSPIECE R1/4" MS-NICKEL | 1 |
| 20.5 | 2028687 | > PRESSURE GAUGE NG63 R1/4" HI.0-6BAR | 1 |
| 20.6 | 2054268 | > DUAL NIPPLE G1/4" x G1/4" MS VP. | 1 |
| 20.7 | 2028691 | > BLOWGUN 1/4" MS 30BAR VP. | 1 |
| 20.8 | 2028291 | > BALL TAP R1/4" PN42 GIACOMINI R254DL | 1 |

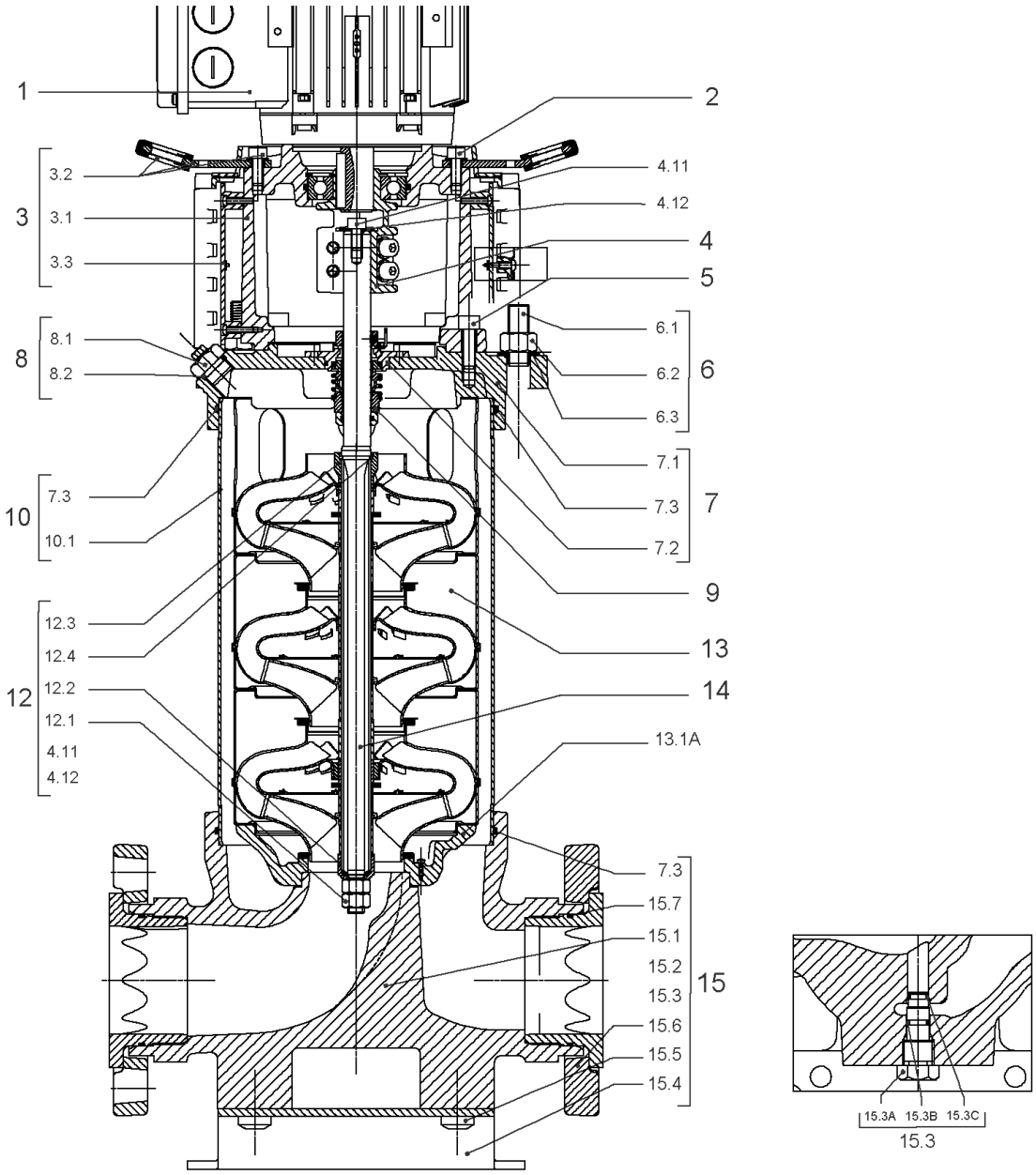
1
2
3
3.2
3.1
3.3
4.11
4.12
4
5
8
8.1
8.2
6.1
6.2
6.3
6
7.1
7.3
7.2
7
10
7.3
10.1
9
12.3
12.4
12.2
12.1
4.11
4.12
12
13
14
13.1A
7.3
15.7
15.1
15.2
15.3
15.6
15.5
15.4
15
15.3A
15.3B
15.3C
15.3

| Item | Article no. | Description | Quantity |
|---|---|---|---|
| 1 | | DRIVE HELIX VE3604-IE2-ARC KIT | 1 |
| Note: no longer available/nicht mehrlieferbar/n'est plus disponible | | | |
| 1 | 4218537 | DRIVE HELIX VE3604-IE4-WEG KIT | 1 |
| Note: MOTOR BRAND WEG | | | |
| 2 | 4179586 | SCREW M16X60 (4 PIECES) | 1 |
| 3 | 4157721 | LANTERN HELIX 22/36 FF300 BB6312 KIT | 1 |
| 3.1 | | > LANTERN FF300 M+ GJL MACHINED+CATA 6312 | 1 |
| 3.2 | 4179589 | > EYELET CPL.FF300 HELIX(4 PIECES) | 1 |
| 3.3 | 4143969 | > COUPLING PROTECT HELIX FF KIT | 1 |
| 4 | 4143966 | COUPLING D.20XD.38 FF300 KIT | 1 |
| 5 | 4157725 | SCREW M10X40 (4 PIECES) | 1 |
| 6 | 4179592 | STUD BOLT M16X405 KIT | 1 |
| 6.1 | | > TIE BOLT M16-405x24x44-1.4057 | 1 |
| 6.2 | 4179562 | > NUT M16 8.8 ISO4032 (4 PIECES) | 1 |
| 6.3 | 4097852 | > WASHER-CS-16.4-32-2.8-NFE25-511-A2 | 1 |
| 7 | 4179565 | END SHIELD HELIX 8'' EPDM KIT | 1 |
| 7.1 | | > END SHIELD M+ GJL MACHINED+CATA | 1 |
| 7.2 | 4179564 | > O-RING D.42.52x2.62 EPDM VP. | 1 |
| 7.3 | 4179571 | > O-RING HOUSING PIPE HELIX22/36/52 VP. | 1 |
| 8 | 4186377 | FILING/PURGING PLUG 304 HELIX KIT | 1 |
| 8.1 | | > FILLING/VENTING-PLUG-MVI8/10"-304 | 1 |
| 8.2 | 4032291 | > O-RING 17x3 EPDM KTW/WRC | 1 |
| 9 | 4143973 | CARTRIDGE HELIX22-36-52 O/E KIT | 1 |
| 10 | 4179593 | HOUSING PIPE D.204X330 1.4307 KIT | 1 |
| 7.3 | 4179571 | > O-RING HOUSING PIPE HELIX22/36/52 VP. | 1 |
| 10.1 | | > HOUSING-PIPE Ø204-M+3604/5203-304 | 1 |
| 11 | 4181071 | CENTRALIZER HELIX 8'' M+36 1.4301 VP. | 1 |
| 12 | 4161186 | SHAFT EQUIPMENT HELIX V36 8'' KIT | 1 |
| 13 | | HYDRAULIC HELIX V 3604 | 1 |
| 14 | 2123751 | SHAFT D.22 LG.487,34 HELIX 1.4057 VP. | 1 |
| 15 | 4186381 | EQUIPED HOUSING HELIX OPTI DN65 GJL KIT | 1 |
| 15.1 | | > PUMP CASING MONO.M+8" DN65 PN16 DWA | 1 |
| 15.2 | | > HYD.SUP.M+8" MONO.HOUSING DN65 DWA | 1 |
| 15.3 | 4106048 | > DRAIN/PRIMING PLUG EPDM HELIX FIRST KIT | 1 |

| Item | Article no. | Description | Quantity |
|---|---|---|---|
| 15.3A | | >> DRAIN AND PRIMING PLUG-VMI10"-304 | 1 |
| 15.3B | 4032293 | >> O-RING-10x3-EPDM-KTW/WRC | 1 |
| 15.3C | 4233957 | >> O-RING ID.9 EPDM VP. | 1 |
| 7.3 | 4179571 | > O-RING HOUSING PIPE HELIX22/36/52 VP. | 1 |
| 13.1A | 4161200 | > NECK RING 1.STAGE HELIX V36/52 KIT | 1 |
| | | >> NECK-RING-M+36/52 | 1 |
| | | >> HYDRAULIC SUPPORT CAP M+36/52 304 | 1 |
| | | >> SCREW TCL M3X8 A4 POZIDRIV | 1 |

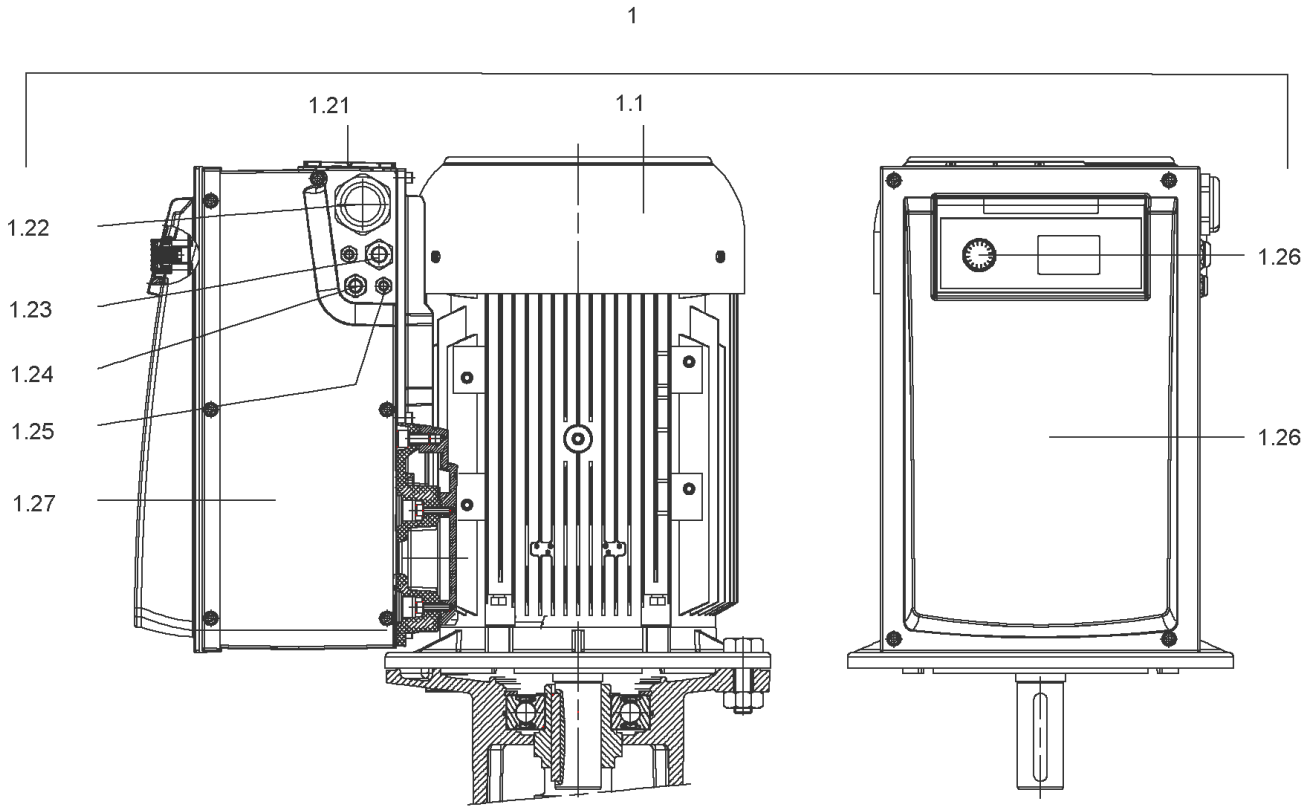
1
1.21
1.1
1.22
1.23
1.24
1.25
1.27
1.26
1.26

## DRIVE HELIX VE3604-IE2-ARC KIT

| Item | Article no. | Description | Quantity |
|---|---|---|---|
| 1.1 | | M11-2T540P55V1-160F300-N42-IE2 | 1 |
| | | SPARE PARTS MOTOR:ON REQUEST | 1 |
| 1.21 | 2132102 | FAN SMALL TL6/7 FF KIT | 1 |
| 1.25 | 2132097 | CABLE CONNECTION M12 TL6/7 FF VP. | 1 |
| 1.24 | 2132098 | CABLE CONNECTION M16 TL6/7 FF VP. | 1 |
| 1.23 | 2132099 | CABLE CONNECTION M20 TL6/7 FF VP. | 1 |
| 1.22 | 2132100 | CABLE CONNECTION SMALL M40 TL6/7 FF VP. | 1 |
| 1.27 | 2132104 | COVER SIDE TL6/7 FF CPL.VP. | 1 |
| 1.26 | 2132452 | MODULE COVER/BUTTON TL6/7 FF VP. | 1 |

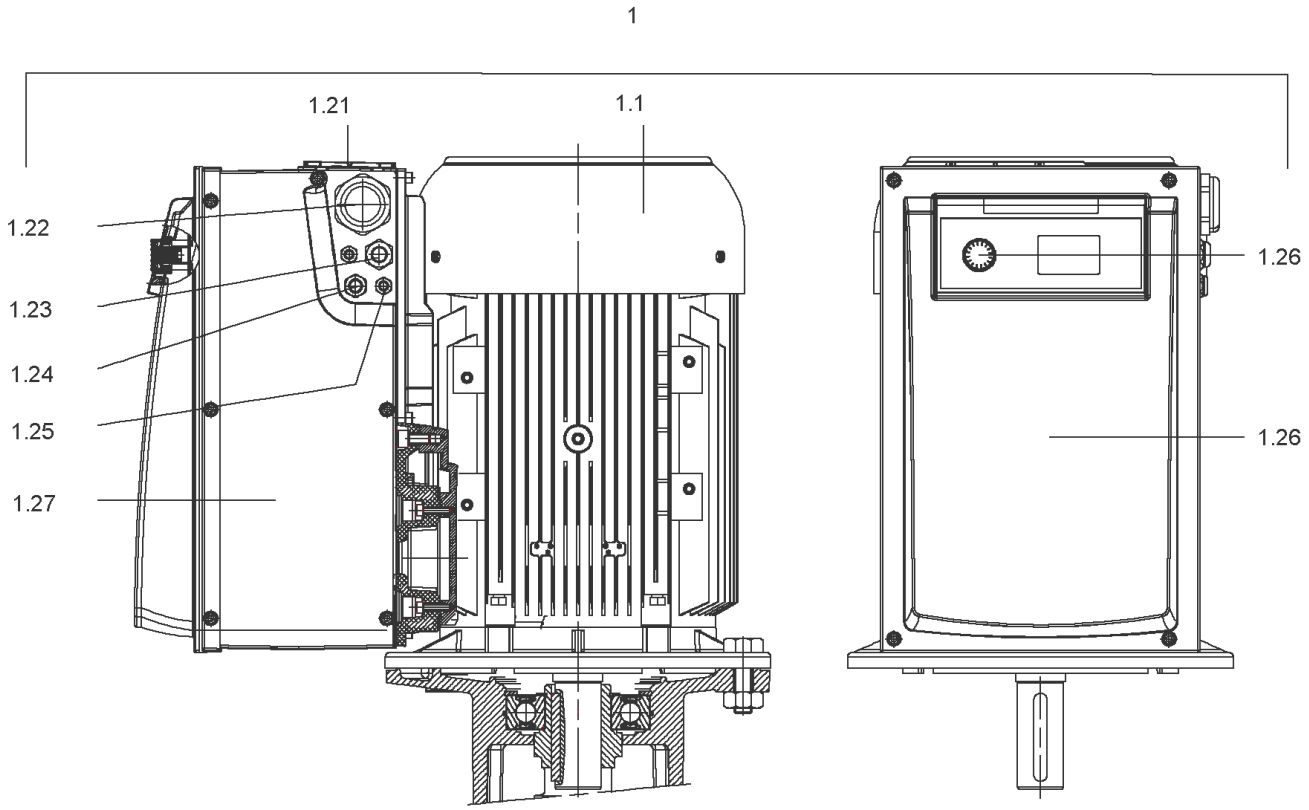
1
1.21
1.1
1.22
1.23
1.24
1.25
1.27
1.26
1.26

## DRIVE HELIX VE3604-IE4-WEG KIT (4218537)

| Item | Article no. | Description | Quantity |
|---|---|---|---|
| 1.1 | | M11-2T540P55V1-160F30-N42-ADAPT-IE4-WEG | 1 |
| | | SPARE PARTS MOTOR:ON REQUEST | 1 |
| 1.21 | 2132102 | FAN SMALL TL6/7 FF KIT | 1 |
| 1.25 | 2132097 | CABLE CONNECTION M12 TL6/7 FF VP. | 1 |
| 1.24 | 2132098 | CABLE CONNECTION M16 TL6/7 FF VP. | 1 |
| 1.23 | 2132099 | CABLE CONNECTION M20 TL6/7 FF VP. | 1 |
| 1.22 | 2132100 | CABLE CONNECTION SMALL M40 TL6/7 FF VP. | 1 |
| 1.27 | 2132104 | COVER SIDE TL6/7 FF CPL.VP. | 1 |
| 1.26 | 2132452 | MODULE COVER/BUTTON TL6/7 FF VP. | 1 |

## COUPLING D.20XD.38 FF300 KIT (4143966)

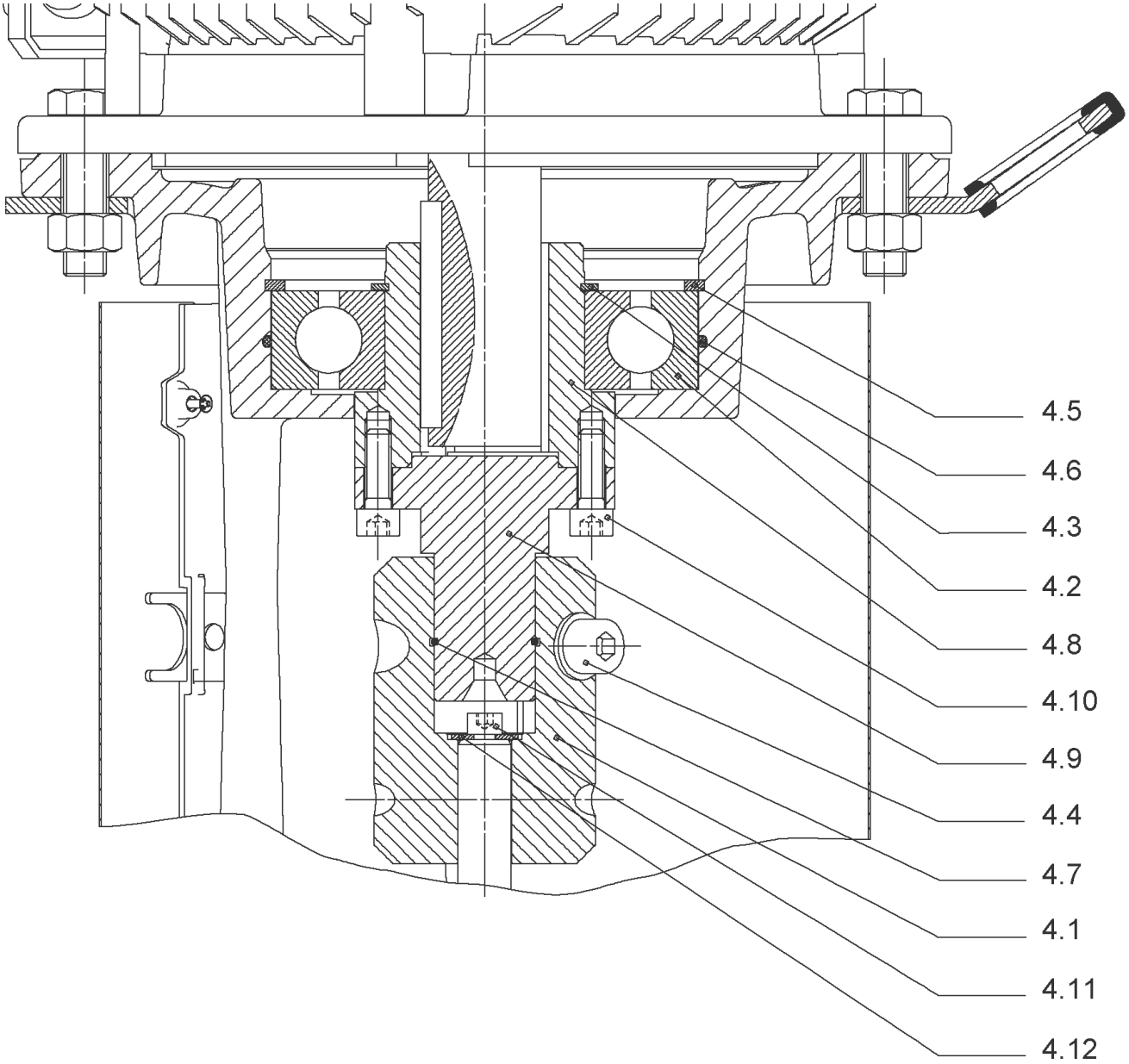

## COUPLING D.20XD.38 FF300 KIT (4143966)

| Item | Article no. | Description | Quantity |
|---|---|---|---|
| 4.1 | 4179590 | COUPLING 2 PARTS D.20XD.38XL115 VP. | 1 |
| 4.2 | 2123699 | BALL BEARING 6312/2Z-C4 (HT) VP. | 1 |
| 4.3 | 63428 | CIRCLIP-FOR-SHAFT-D60x2 | 1 |
| 4.4 | 2130991 | SCREW M12X30 ISO4762 8.8 ZN(4 PIECES) | 1 |
| 4.5 | 4032277 | CIRCLIP-HOLE-130x4 | 1 |
| 4.6 | 4006725 | O-RING ID.132,94x3,53 NBR70SR | 1 |
| 4.7 | 2130992 | RETAINING RING D.35xD.2,5 DIN7993 VP. | 1 |
| 4.8 | 4179591 | HUB D.42xD.60 VP. | 1 |
| 4.9 | 2130994 | SPACER D.38XD.55 VP. | 1 |
| 4.10 | 4094462 | SCREWS M10 ( 4 PIECES ) | 1 |
| 4.11 | 4233959 | SCREW M8x16 VP. | 1 |
| 4.12 | | SERRATED LOCK WASHER Ø8.2XØ25X35X2 | 1 |

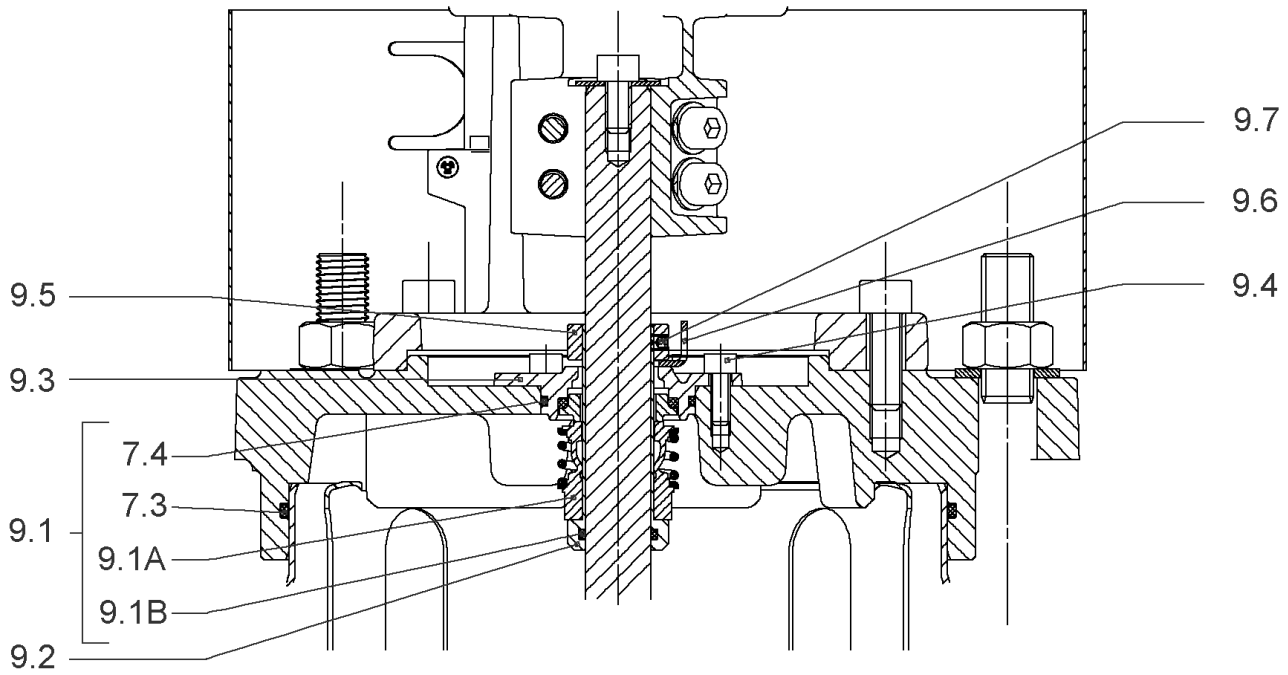
9.7
9.6
9.4
9.5
9.3
7.4
7.3
9.1
9.1A
9.1B
9.2

## CARTRIDGE HELIX22-36-52 O/E KIT (4143973)

| Item | Article no. | Description | Quantity |
|---|---|---|---|
| 9.1 | 4143974 | SEAL-KIT-HELIX22-36-52 O/E | 1 |
| 7.3 | 4179571 | > O-RING HOUSING PIPE HELIX22/36/52 VP. | 1 |
| 7.4 | 4179572 | > O-RING ID.42.52X2.62 EPDM VP. | 1 |
| 9.1A | 4179573 | > M.SEAL.HELIX22-36-52 O/E VP. | 1 |
| 9.1B | 4179574 | > O-RING ID.20x2.65 EPDM VP. | 1 |
| 9.2 | 4179566 | SHAFT SLEEVE D.20/20X60 1.4404 VP. | 1 |
| 9.3 | 4179567 | RING HOLDER Ø22 1.4301 VP. | 1 |
| 9.4 | 4176520 | SCREW CH M5x5 A4-70 ( 3PIECES ) | 1 |
| 9.5 | 4179568 | DRIVE RING D.31/22.1x11 MACH.VP. | 1 |
| 9.6 | 4179569 | TOOL M.S.CART.HELIX 8'' VP. | 1 |
| 9.7 | 4179570 | SCREW M6X16 ISO4762 8.8 GEOMET(4 PIECES) | 1 |

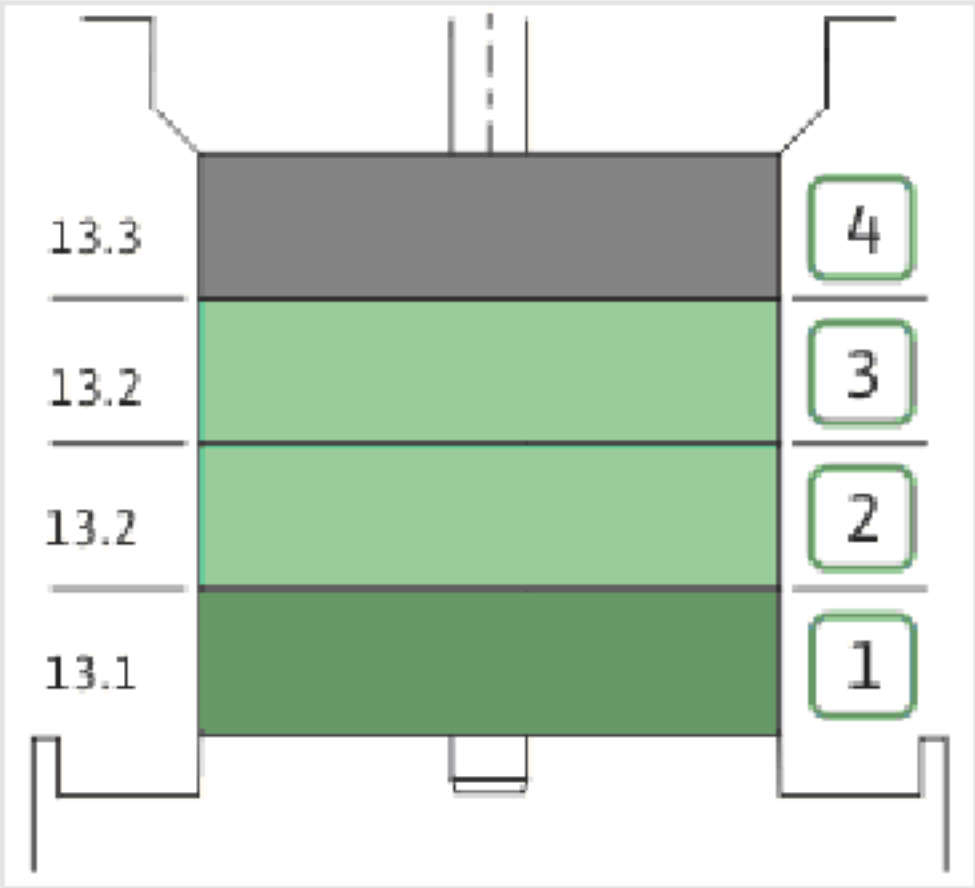
13.3
13.2
13.2
13.1
4
3
2
1

| Item | Article no. | Description | Quantity |
|---|---|---|---|
| 13.1 | 4161192 | INTERMEDIATE STAGE HELIX V36 1.4301 KIT | 1 |
| | | > SLEEVE-SPACER-D22XL16,66-316L | 1 |
| | | > MACH.BEARING-DIFFUSER+NR-M+36-304 | 1 |
| | | > SHAFT-SLEEVE-D26xD22x16-CW | 1 |
| | | > IMPELLER-H1-M+36-304 | 1 |
| 13.1A | 4161200 | > NECK RING 1.STAGE HELIX V36/52 KIT | 1 |
| | | >> NECK-RING-M+36/52 | 1 |
| | | >> HYDRAULIC SUPPORT CAP M+36/52 304 | 1 |
| | | >> SCREW TCL M3X8 A4 POZIDRIV | 1 |
| 13.2 | 4161193 | INTERMEDIATE STAGE HELIX V36 1.4301 KIT | 1 |
| | | > MACH.STD-DIFFUSER+NR-M+36-304 | 1 |
| | | > IMPELLER-H4-M+36-304 | 1 |
| 13.3 | 4161194 | UPPER STAGE HELIX 36 1.4301 KIT | 1 |
| | | > STOP COLLAR OF IMPELLER L20-Ø22-316L | 1 |
| | | > IMPELLER-H4-M+36-304 | 1 |
| | | > MACH.-RIGID-STD-DISCH.-CHAMBER-M+36-304 | 1 |

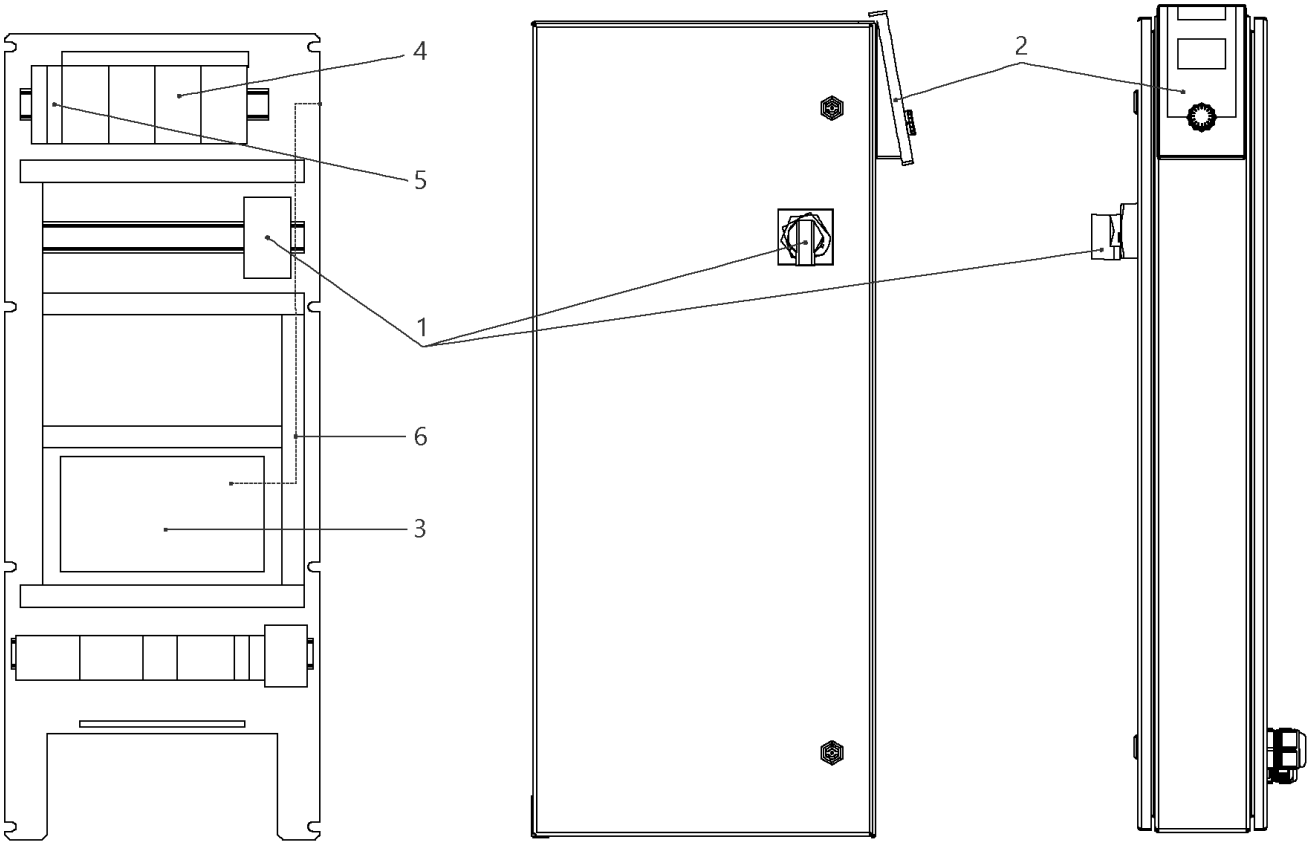
4
5
1
6
3
2

## W-CTRL-SCE-B-3x24A-T34-FM-ND4-AVC-PKG

| Item | Article no. | Description | Quantity |
|---|---|---|---|
| 1 | 2104465 | MAIN SWITCH OT100F3 L250 KIT | 1 |
| 2 | 4184784 | CONTROL PANEL HMI SC KIT | 1 |
| 2 | 4185259 | ASSEMBLY DISPLAY SC PKG VP. | 1 |
| Note: DISPLAY ALONE / PLATINE SEULE | | | |
| 3 | 4185257 | ASSEMBLY CPU SCe Booster VP. | 1 |
| 4 | 2051219 | AUTOM.CIRCUIT BREAKER S203 B32 FOR 15kW | 1 |
| 5 | 2046288 | CIRCUIT BREAKER S201 B16 | 1 |
| 6 | 4204004 | PATCH CABLE RJ45 CAT6 1,5M GREY SC-PANEL | 1 |

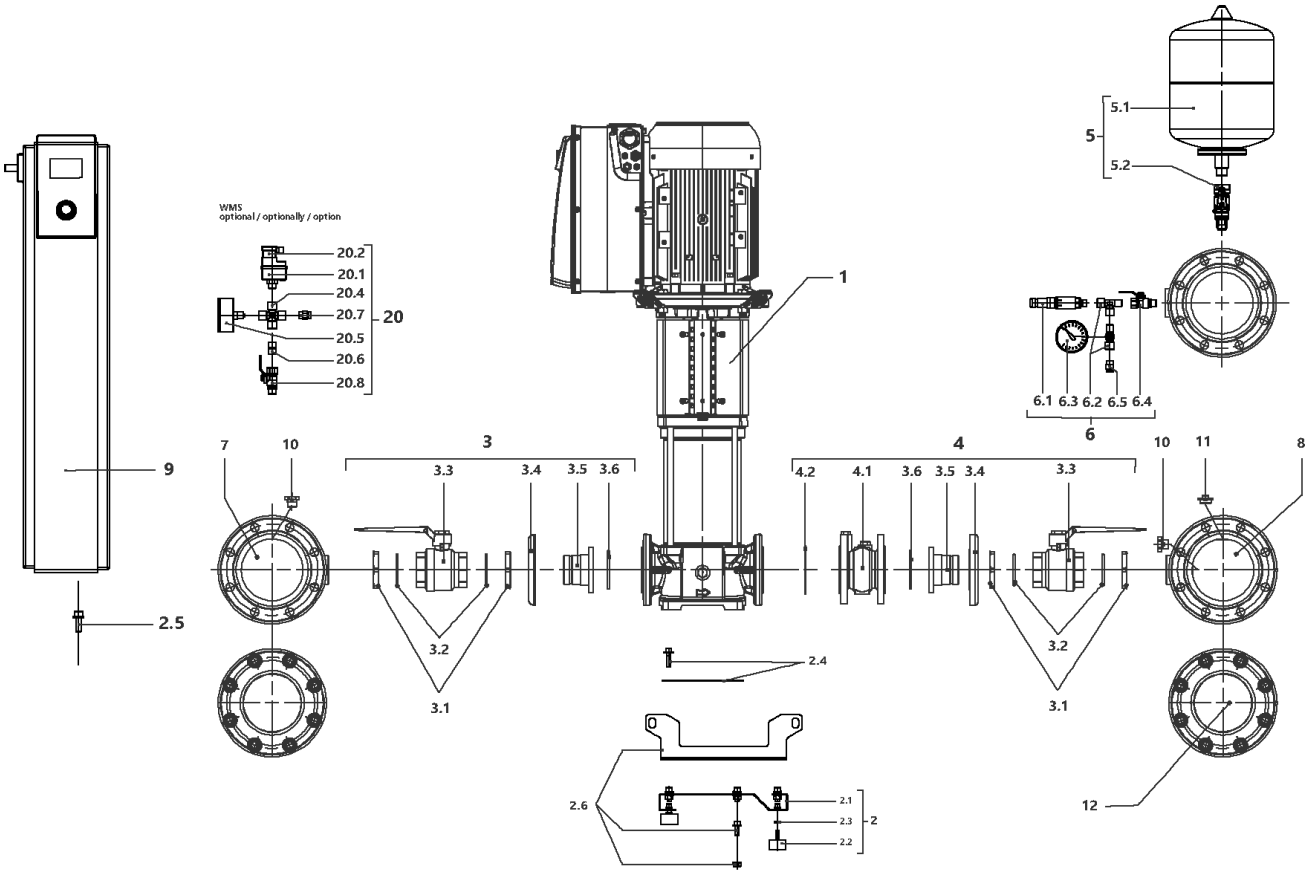
WMS
optional / optionally / option
20.2
20.1
20.4
20.7
20.5
20.6
20.8
20
1
5.1
5
5.2
6.1 6.3 6.2 6.5 6.4
6
9
7
10
3
3.3
3.4
3.5 3.6
4
4.2
4.1
3.6 3.5 3.4
3.3
10
11
8
2.5
3.2
3.1
2.4
3.2
3.1
2.6
2.1
2.3
2.2
2
12

## SiBoost Smart 3HELIX VE3605 (2540920)

| Item | Article no. | Description | Quantity |
|---|---|---|---|
| 1 | | HELIX VE3605-4/16/E/KS/2G | 1 |
| 2 | 4204910 | BASE PLATE DE3 1750x420 M10 KIT | 1 |
| 2.1 | | > BASE_FR_3x22/36/52V_E500_L400_BOX150-250 | 1 |
| 2.2 | 2027881 | > VIBRATION DAMPER M.10X20 D.70 | 1 |
| 2.3 | 2028281 | > NUT M10 DIN936 (ISO4035) 17H VZ | 1 |
| 2.4 | 4204891 | > HOLDER PUMP Siboost Smart V36/52 KIT | 1 |
| 2.5 | 4197084 | > HOLDER SWITCHBOX WILO Smart Control KIT | 1 |
| 2.6 | 4203979 | > LIFTING Siboost HELIX 22/36 KIT | 1 |
| 3 | 4204892 | SUCTION SIDE Siboost Helix 36 KIT | 1 |
| 3.1 | 2027123 | > NUT G2½ X15 MS | 1 |
| 3.2 | 2025969 | > O-RING ID.72,39x5,33 EPDM 70SHORE | 1 |
| 3.2 | | > VALVE-BS-2"1/2-F/F-PS25-BRASS-NICK-ACS | 1 |
| 3.4 | 2032973 | > LAPPED FLANGE DN65 1.4301 DIN2642P | 1 |
| 3.5 | | > UNION INSERT DN65-G21/2" FLANGE AISI304 | 1 |
| 3.6 | 2028296 | > O-RING ID.91,44x5,33 EPDM 70SHORE | 1 |
| 4 | 4204894 | DELIVERY SIDE Siboost Helix 36 KIT | 1 |
| 3.1 | 2027123 | > NUT G2½ X15 MS | 1 |
| 3.2 | 2025969 | > O-RING ID.72,39x5,33 EPDM 70SHORE | 1 |
| 3.3 | | > VALVE-BS-2"1/2-F/F-PS25-BRASS-NICK-ACS | 1 |
| Note: accessories see price list/Zubehör siehe | | | |
| 3.4 | 2032973 | > LAPPED FLANGE DN65 1.4301 DIN2642P | 1 |
| 3.5 | | > UNION INSERT DN65-G21/2" FLANGE AISI304 | 1 |
| Note: accessories see price list/Zubehör siehe | | | |
| 3.6 | 2028296 | > O-RING ID.91,44x5,33 EPDM 70SHORE | 1 |
| 4.1 | 2127586 | > NON RETURN VALVE DN65 PN16 TYP402B VP. | 1 |
| 4.2 | 2119912 | > GASKET D.77/127X2 DN65 C4430 VP. | 1 |
| 5 | 4203983 | DIAPHREM TANK 8L/PN16 DIN4807/T5 KIT | 1 |
| 5.1 | 2045914 | > DIAPHREM TANK 8L TYP-DD 16BAR | 1 |
| 5.2 | 4189350 | > FLOW FITTING G3/4 FOR DIAPHRAG VESSEL VP | 1 |
| 6 | 4197076 | PRESSURE SENSOR/ GAUGE 0-16BAR KIT | 1 |
| 6.1 | 2085909 | > PRESS.SENSOR 1/4" 0-16BAR 4-20MA VP. | 1 |
| 6.2 | 4197077 | > T-PIECE 1/4" VP. | 1 |
| 6.3 | 2028692 | > PRESSURE GAUGE NG63-PN16-G1/4 | 1 |
| 6.4 | 2028291 | > BALL TAP R1/4" PN42 GIACOMINI R254DL | 1 |

| Item | Article no. | Description | Quantity |
|---|---|---|---|
| 6.5 | 2028691 | > BLOWGUN 1/4" MS 30BAR VP. | 1 |
| 7 | 4204911 | PIPE DE3 DN125-3x21/2"+2x1/4x1500 VP. | 1 |
| 8 | 4204912 | PIPE DE3 DN125-3x21/2"+2x1/4+1x3/4x1500 | 1 |
| 9 | | W-CTRL-SCE-B-3x32A-T34-FM-ND4-AVC-PKG | 1 |
| 10 | 4197079 | PLUG G1/4"x10 AISI304 KIT | 1 |
| 11 | 2032654 | PLUG R3/4" MS VIEGA 1751 | 1 |
| 12 | 4203993 | BLIND-FLANGE DN125 PN10/16-A2 KIT | 1 |
| | 4203994 | > FLAT GASKET D.120/162X2 DN125 FIBRE VP. | 1 |
| | 2094573 | > NUT M16 DIN934 A2 1.4301 VP. | 1 |
| | 2107590 | > SCREW M16x70 DIN933 A2 (8 PIECES) | 1 |
| | 2094572 | > WASHER A17 DIN125 A2 1.4301 VP. | 1 |
| | | > FULL FLANGE ST.DN100 PN16 EN1092-1/05 A2 | 1 |
| | | > FLANGE COVER DN125 DIN 3443 FORM A | 1 |
| 20 | | ASSEMBLY WMS. DE-EB. +VP | 1 |
| 20.1 | 2028652 | > PRESSURE SWITCH PS3-ASR 1/(1,3) VP. | 1 |
| 20.2 | 2130983 | > PLUG PS3-415 WITH KABEL 1,5M 2NO VP. | 1 |
| 20.4 | 2028290 | > CROSSPIECE R1/4" MS-NICKEL | 1 |
| 20.5 | 2028687 | > PRESSURE GAUGE NG63 R1/4" HI.0-6BAR | 1 |
| 20.6 | 2054268 | > DUAL NIPPLE G1/4" x G1/4" MS VP. | 1 |
| 20.7 | 2028691 | > BLOWGUN 1/4" MS 30BAR VP. | 1 |
| 20.8 | 2028291 | > BALL TAP R1/4" PN42 GIACOMINI R254DL | 1 |

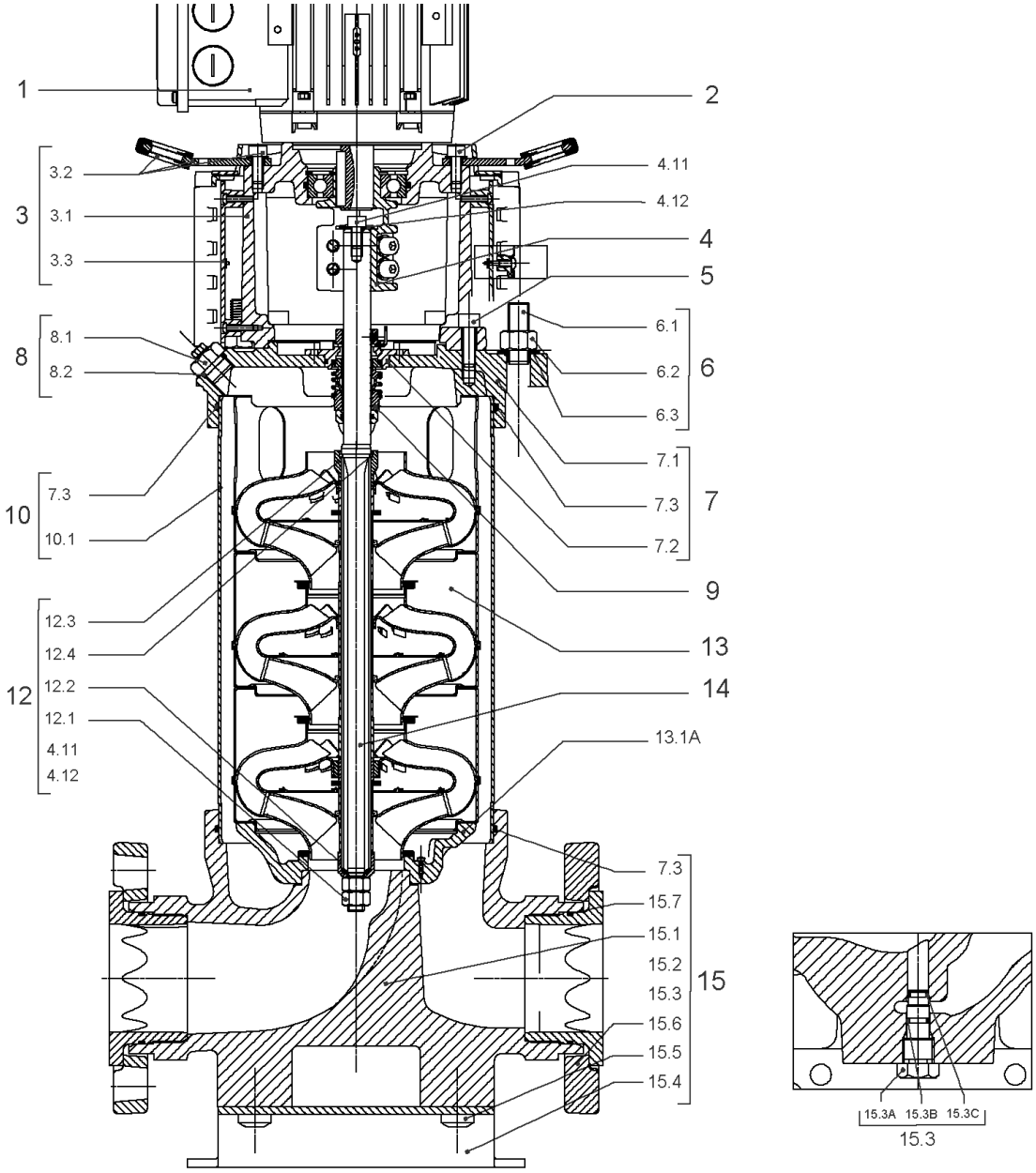
1
2
3
3.2
3.1
3.3
4.11
4.12
4
5
8
8.1
8.2
6.1
6.2
6.3
6
7.1
7.3
7.2
7
10
7.3
10.1
9
12.3
12.4
12.2
12.1
4.11
4.12
12
13
14
13.1A
7.3
15.7
15.1
15.2
15.3
15.6
15.5
15.4
15
15.3A
15.3B
15.3C
15.3

| Item | Article no. | Description | Quantity |
|---|---|---|---|
| 1 | | DRIVE HELIX VE3605-IE2-ARC KIT | 1 |
| Note: no longer available/nicht mehrlieferbar/n'est plus disponible | | | |
| 1 | 4218532 | DRIVE HELIX VE3605-IE4-WEG KIT | 1 |
| Note: MOTOR BRAND WEG | | | |
| 2 | 4179586 | SCREW M16X60 (4 PIECES) | 1 |
| 3 | 4157721 | LANTERN HELIX 22/36 FF300 BB6312 KIT | 1 |
| 3.1 | | > LANTERN FF300 M+ GJL MACHINED+CATA 6312 | 1 |
| 3.2 | 4179589 | > EYELET CPL.FF300 HELIX(4 PIECES) | 1 |
| 3.3 | 4143969 | > COUPLING PROTECT HELIX FF KIT | 1 |
| 4 | 4143966 | COUPLING D.20XD.38 FF300 KIT | 1 |
| 5 | 4157725 | SCREW M10X40 (4 PIECES) | 1 |
| 6 | 4181083 | STUD BOLT M16X466 KIT | 1 |
| 6.1 | | > TIE BOLT M16-466x24x44-1.4057 | 1 |
| 6.2 | 4179562 | > NUT M16 8.8 ISO4032 (4 PIECES) | 1 |
| 6.3 | 4097852 | > WASHER-CS-16.4-32-2.8-NFE25-511-A2 | 1 |
| 7 | 4179565 | END SHIELD HELIX 8'' EPDM KIT | 1 |
| 7.1 | | > END SHIELD M+ GJL MACHINED+CATA | 1 |
| 7.2 | 4179564 | > O-RING D.42.52x2.62 EPDM VP. | 1 |
| 7.3 | 4179571 | > O-RING HOUSING PIPE HELIX22/36/52 VP. | 1 |
| 8 | 4186377 | FILING/PURGING PLUG 304 HELIX KIT | 1 |
| 8.1 | | > FILLING/VENTING-PLUG-MVI8/10"-304 | 1 |
| 8.2 | 4032291 | > O-RING 17x3 EPDM KTW/WRC | 1 |
| 9 | 4143973 | CARTRIDGE HELIX22-36-52 O/E KIT | 1 |
| 10 | 2131084 | HOUSING PIPE D.204x397,44 1.4307 KIT | 1 |
| 7.3 | 4179571 | > O-RING HOUSING PIPE HELIX22/36/52 VP. | 1 |
| 10.1 | | > HOUSING-PIPE Ø204-M+3605-304 | 1 |
| 11 | 4181071 | CENTRALIZER HELIX 8'' M+36 1.4301 VP. | 1 |
| 12 | 4161186 | SHAFT EQUIPMENT HELIX V36 8'' KIT | 1 |
| 13 | | HYDRAULIC HELIX V 3605 | 1 |
| 14 | 4179578 | SHAFT D.22X554 1.4057 VP. | 1 |
| 15 | 4186381 | EQUIPED HOUSING HELIX OPTI DN65 GJL KIT | 1 |
| 15.1 | | > PUMP CASING MONO.M+8" DN65 PN16 DWA | 1 |
| 15.2 | | > HYD.SUP.M+8" MONO.HOUSING DN65 DWA | 1 |
| 15.3 | 4106048 | > DRAIN/PRIMING PLUG EPDM HELIX FIRST KIT | 1 |

| Item | Article no. | Description | Quantity |
|---|---|---|---|
| 15.3A | | >> DRAIN AND PRIMING PLUG-VMI10"-304 | 1 |
| 15.3B | 4032293 | >> O-RING-10x3-EPDM-KTW/WRC | 1 |
| 15.3C | 4233957 | >> O-RING ID.9 EPDM VP. | 1 |
| 7.3 | 4179571 | > O-RING HOUSING PIPE HELIX22/36/52 VP. | 1 |
| 13.1A | 4161200 | > NECK RING 1.STAGE HELIX V36/52 KIT | 1 |
| | | >> NECK-RING-M+36/52 | 1 |
| | | >> HYDRAULIC SUPPORT CAP M+36/52 304 | 1 |
| | | >> SCREW TCL M3X8 A4 POZIDRIV | 1 |

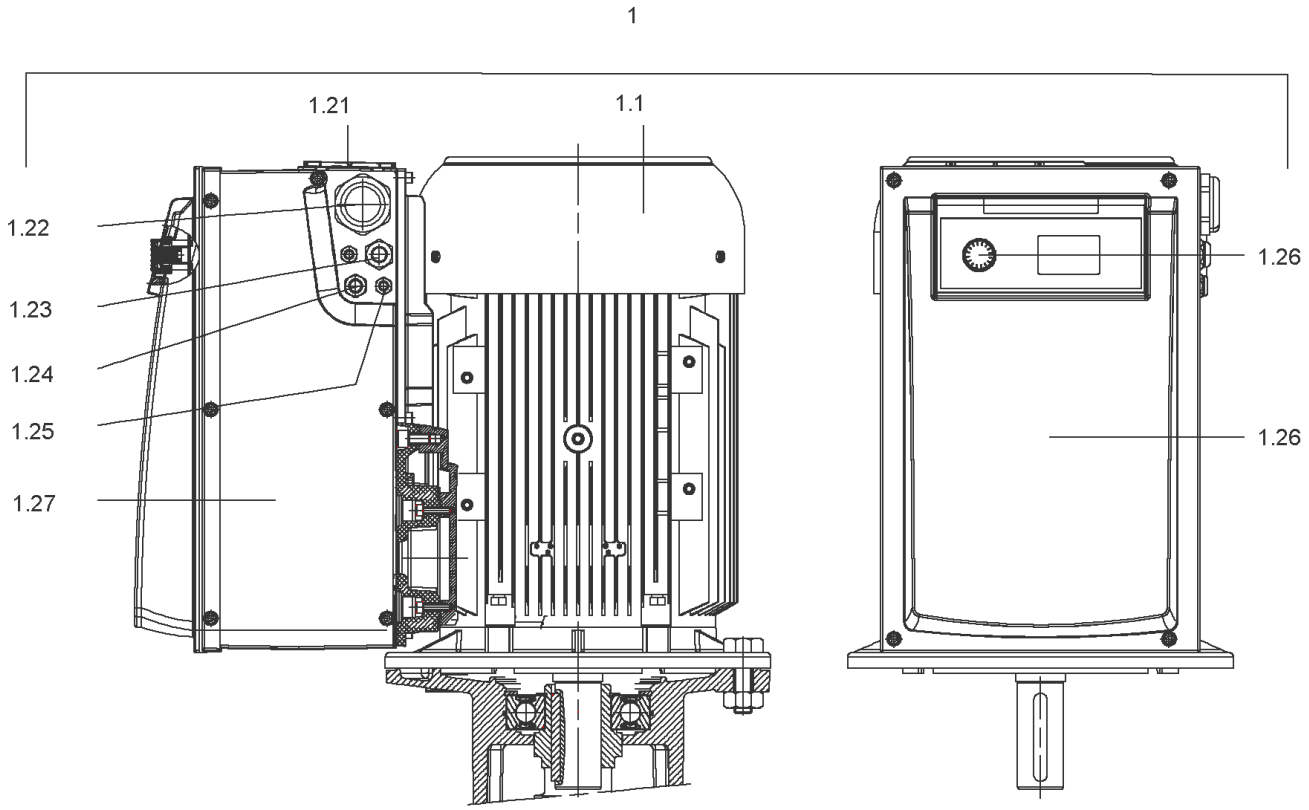
1
1.21
1.1
1.22
1.23
1.24
1.25
1.27
1.26
1.26

## DRIVE HELIX VE3605-IE2-ARC KIT

| Item | Article no. | Description | Quantity |
|---|---|---|---|
| 1.1 | | M15-2T540P55V1-160F300-N42-IE2 | 1 |
| | | SPARE PARTS MOTOR:ON REQUEST | 1 |
| 1.21 | 2132102 | FAN SMALL TL6/7 FF KIT | 1 |
| 1.25 | 2132097 | CABLE CONNECTION M12 TL6/7 FF VP. | 1 |
| 1.24 | 2132098 | CABLE CONNECTION M16 TL6/7 FF VP. | 1 |
| 1.23 | 2132099 | CABLE CONNECTION M20 TL6/7 FF VP. | 1 |
| 1.22 | 2132100 | CABLE CONNECTION SMALL M40 TL6/7 FF VP. | 1 |
| 1.27 | 2132104 | COVER SIDE TL6/7 FF CPL.VP. | 1 |
| 1.26 | 2132452 | MODULE COVER/BUTTON TL6/7 FF VP. | 1 |

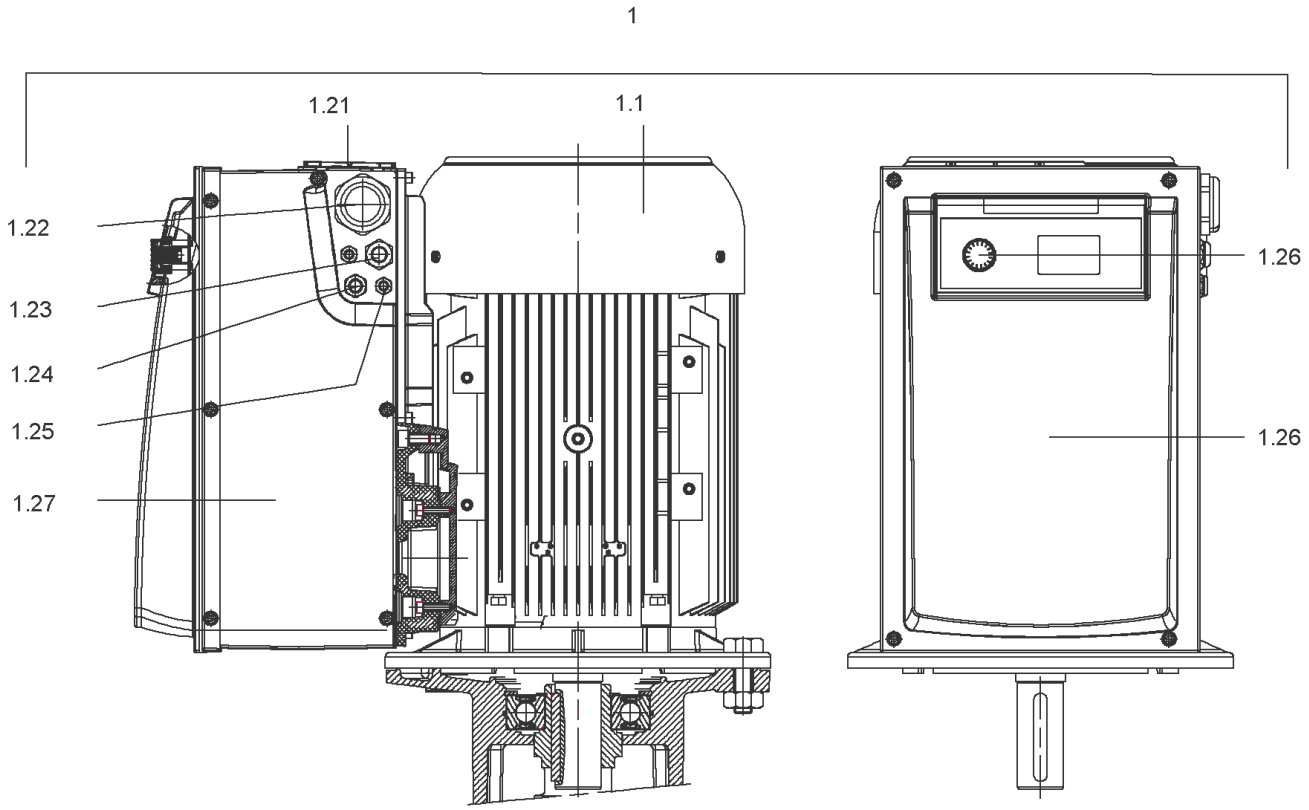
1
1.21
1.1
1.22
1.23
1.24
1.25
1.27
1.26
1.26

## DRIVE HELIX VE3605-IE4-WEG KIT (4218532)

| Item | Article no. | Description | Quantity |
|---|---|---|---|
| 1.1 | | M15-2T540P55V1-160F30-N42-ADAPT-IE4-WEG | 1 |
| | | SPARE PARTS MOTOR:ON REQUEST | 1 |
| 1.21 | 2132102 | FAN SMALL TL6/7 FF KIT | 1 |
| 1.25 | 2132097 | CABLE CONNECTION M12 TL6/7 FF VP. | 1 |
| 1.24 | 2132098 | CABLE CONNECTION M16 TL6/7 FF VP. | 1 |
| 1.23 | 2132099 | CABLE CONNECTION M20 TL6/7 FF VP. | 1 |
| 1.22 | 2132100 | CABLE CONNECTION SMALL M40 TL6/7 FF VP. | 1 |
| 1.27 | 2132104 | COVER SIDE TL6/7 FF CPL.VP. | 1 |
| 1.26 | 2132452 | MODULE COVER/BUTTON TL6/7 FF VP. | 1 |

## COUPLING D.20XD.38 FF300 KIT (4143966)

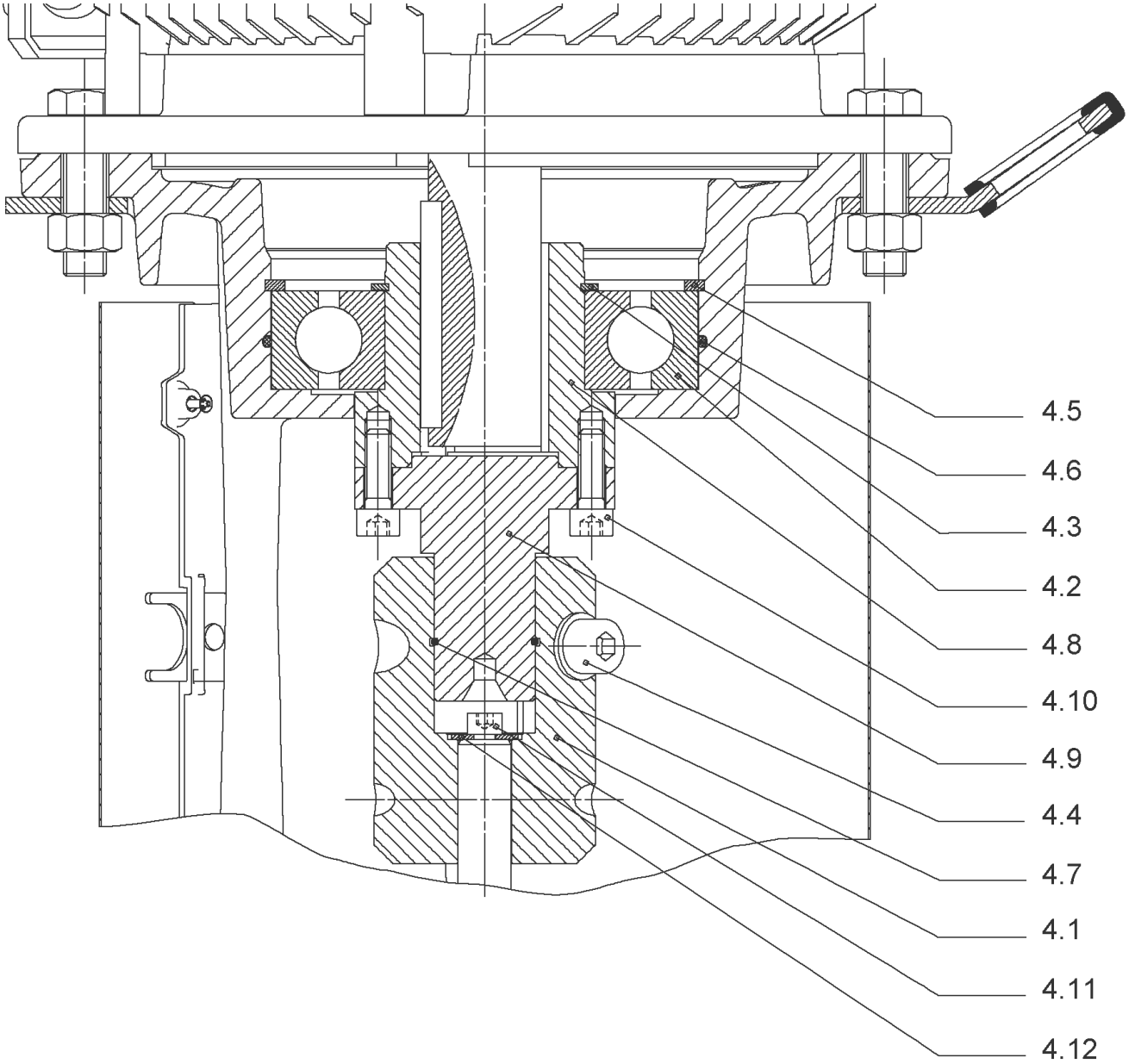

## COUPLING D.20XD.38 FF300 KIT (4143966)

| Item | Article no. | Description | Quantity |
|---|---|---|---|
| 4.1 | 4179590 | COUPLING 2 PARTS D.20XD.38XL115 VP. | 1 |
| 4.2 | 2123699 | BALL BEARING 6312/2Z-C4 (HT) VP. | 1 |
| 4.3 | 63428 | CIRCLIP-FOR-SHAFT-D60x2 | 1 |
| 4.4 | 2130991 | SCREW M12X30 ISO4762 8.8 ZN(4 PIECES) | 1 |
| 4.5 | 4032277 | CIRCLIP-HOLE-130x4 | 1 |
| 4.6 | 4006725 | O-RING ID.132,94x3,53 NBR70SR | 1 |
| 4.7 | 2130992 | RETAINING RING D.35xD.2,5 DIN7993 VP. | 1 |
| 4.8 | 4179591 | HUB D.42xD.60 VP. | 1 |
| 4.9 | 2130994 | SPACER D.38XD.55 VP. | 1 |
| 4.10 | 4094462 | SCREWS M10 ( 4 PIECES ) | 1 |
| 4.11 | 4233959 | SCREW M8x16 VP. | 1 |
| 4.12 | | SERRATED LOCK WASHER Ø8.2XØ25X35X2 | 1 |

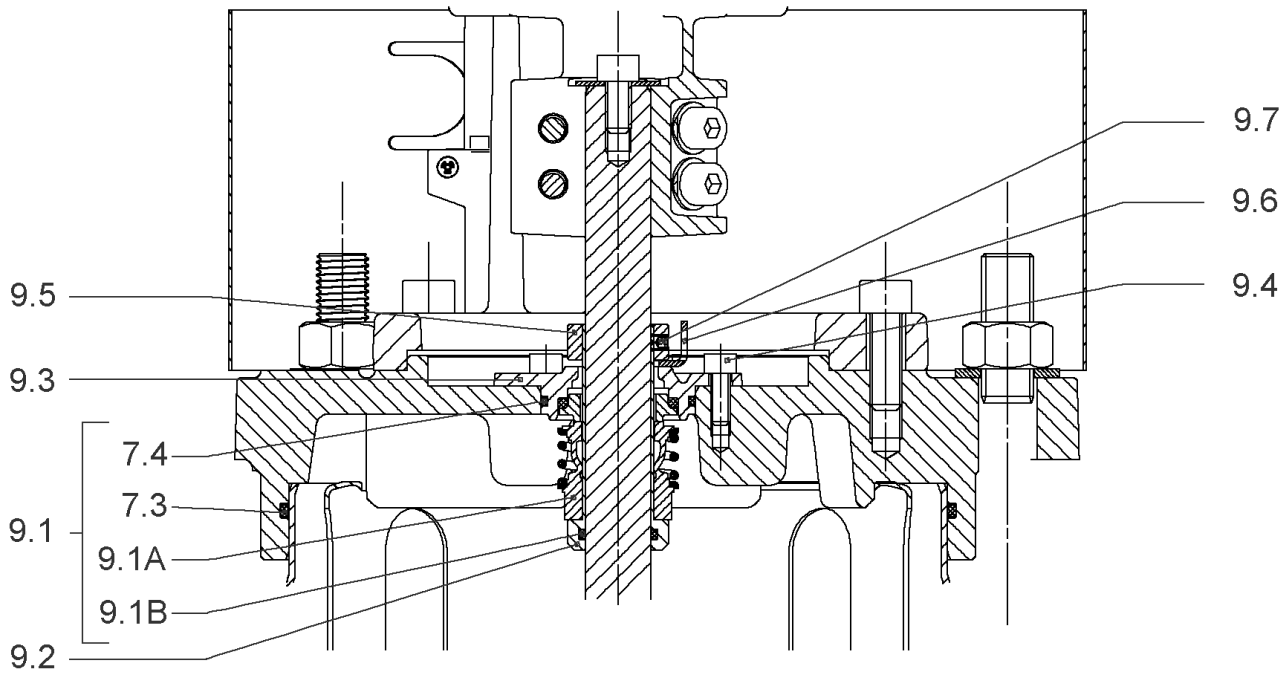
9.7
9.6
9.4
9.5
9.3
7.4
7.3
9.1
9.1A
9.1B
9.2

## CARTRIDGE HELIX22-36-52 O/E KIT (4143973)

| Item | Article no. | Description | Quantity |
|---|---|---|---|
| 9.1 | 4143974 | SEAL-KIT-HELIX22-36-52 O/E | 1 |
| 7.3 | 4179571 | > O-RING HOUSING PIPE HELIX22/36/52 VP. | 1 |
| 7.4 | 4179572 | > O-RING ID.42.52X2.62 EPDM VP. | 1 |
| 9.1A | 4179573 | > M.SEAL.HELIX22-36-52 O/E VP. | 1 |
| 9.1B | 4179574 | > O-RING ID.20x2.65 EPDM VP. | 1 |
| 9.2 | 4179566 | SHAFT SLEEVE D.20/20X60 1.4404 VP. | 1 |
| 9.3 | 4179567 | RING HOLDER Ø22 1.4301 VP. | 1 |
| 9.4 | 4176520 | SCREW CH M5x5 A4-70 ( 3PIECES ) | 1 |
| 9.5 | 4179568 | DRIVE RING D.31/22.1x11 MACH.VP. | 1 |
| 9.6 | 4179569 | TOOL M.S.CART.HELIX 8'' VP. | 1 |
| 9.7 | 4179570 | SCREW M6X16 ISO4762 8.8 GEOMET(4 PIECES) | 1 |

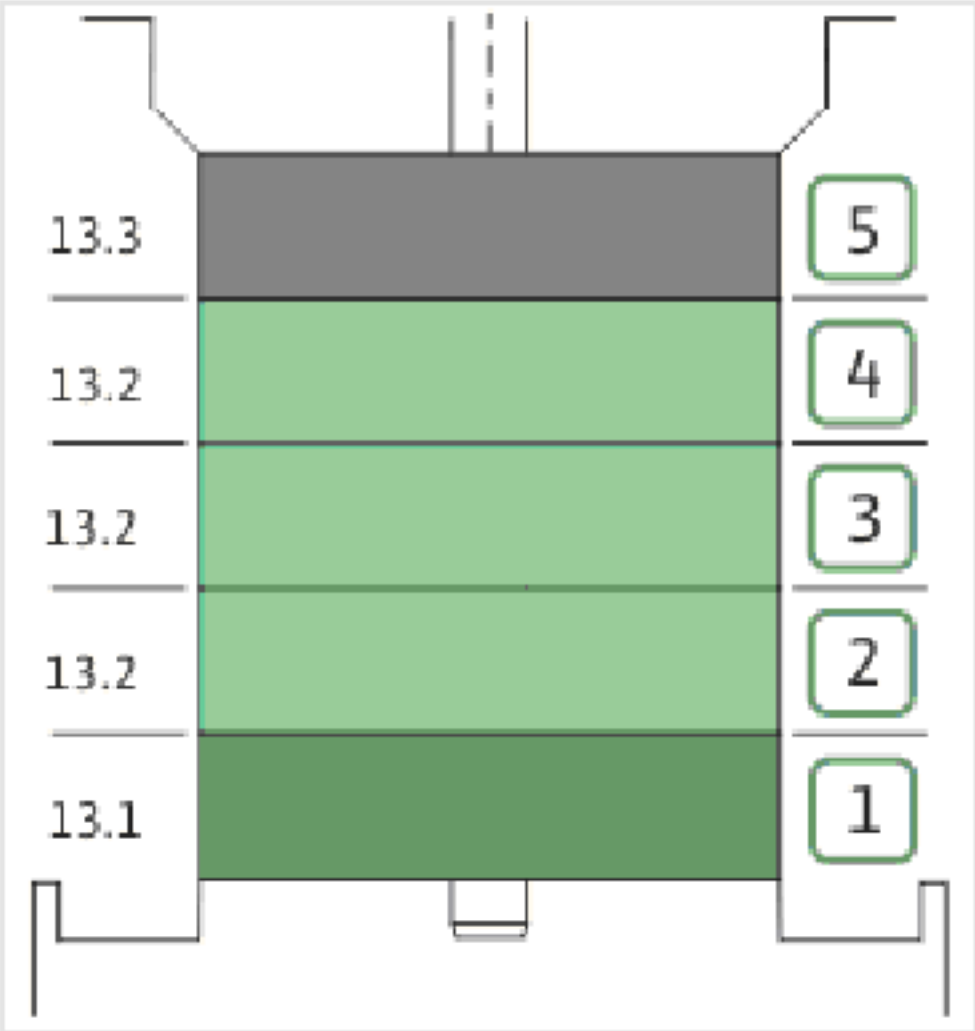
13.3
13.2
13.2
13.2
13.1
5
4
3
2
1

| Item | Article no. | Description | Quantity |
|---|---|---|---|
| 13.1 | 4161192 | INTERMEDIATE STAGE HELIX V36 1.4301 KIT | 1 |
| | | > SLEEVE-SPACER-D22XL16,66-316L | 1 |
| | | > MACH.BEARING-DIFFUSER+NR-M+36-304 | 1 |
| | | > SHAFT-SLEEVE-D26xD22x16-CW | 1 |
| | | > IMPELLER-H1-M+36-304 | 1 |
| 13.1A | 4161200 | > NECK RING 1.STAGE HELIX V36/52 KIT | 1 |
| | | >> NECK-RING-M+36/52 | 1 |
| | | >> HYDRAULIC SUPPORT CAP M+36/52 304 | 1 |
| | | >> SCREW TCL M3X8 A4 POZIDRIV | 1 |
| 13.2 | 4161193 | INTERMEDIATE STAGE HELIX V36 1.4301 KIT | 1 |
| | | > MACH.STD-DIFFUSER+NR-M+36-304 | 1 |
| | | > IMPELLER-H4-M+36-304 | 1 |
| 13.3 | 4161194 | UPPER STAGE HELIX 36 1.4301 KIT | 1 |
| | | > STOP COLLAR OF IMPELLER L20-Ø22-316L | 1 |
| | | > IMPELLER-H4-M+36-304 | 1 |
| | | > MACH.-RIGID-STD-DISCH.-CHAMBER-M+36-304 | 1 |

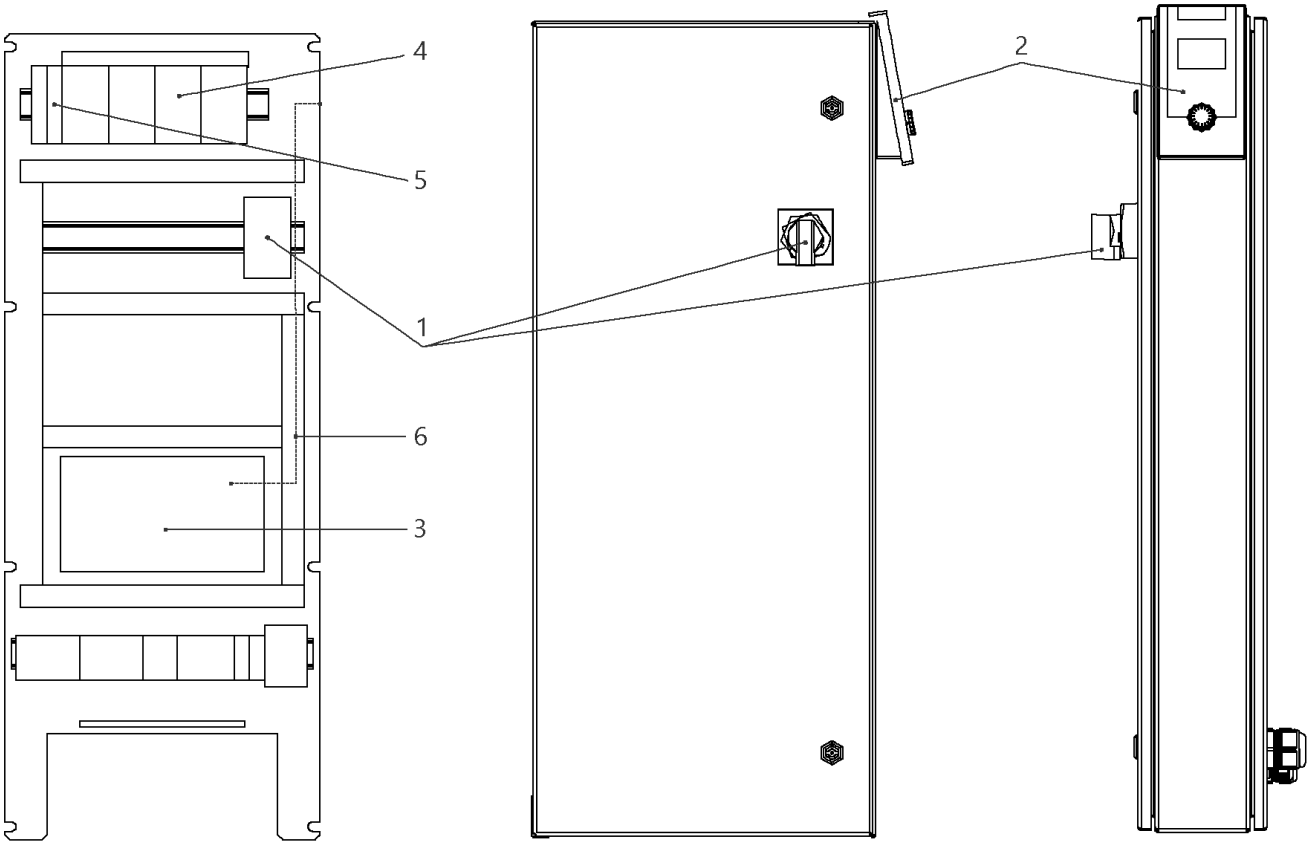
4
5
1
6
3
2

## W-CTRL-SCE-B-3x32A-T34-FM-ND4-AVC-PKG

| Item | Article no. | Description | Quantity |
|---|---|---|---|
| 1 | 2104468 | MAIN SWITCH OT125F3 L250 KIT | 1 |
| 2 | 4184784 | CONTROL PANEL HMI SC KIT | 1 |
| 2 | 4185259 | ASSEMBLY DISPLAY SC PKG VP. | 1 |
| Note: DISPLAY ALONE / PLATINE SEULE | | | |
| 3 | 4185257 | ASSEMBLY CPU SCe Booster VP. | 1 |
| 4 | 2051220 | AUTOM.CIRCUIT BREAKER S203 B40 FOR18,5kW | 1 |
| 5 | 2046288 | CIRCUIT BREAKER S201 B16 | 1 |
| 6 | 4204004 | PATCH CABLE RJ45 CAT6 1,5M GREY SC-PANEL | 1 |

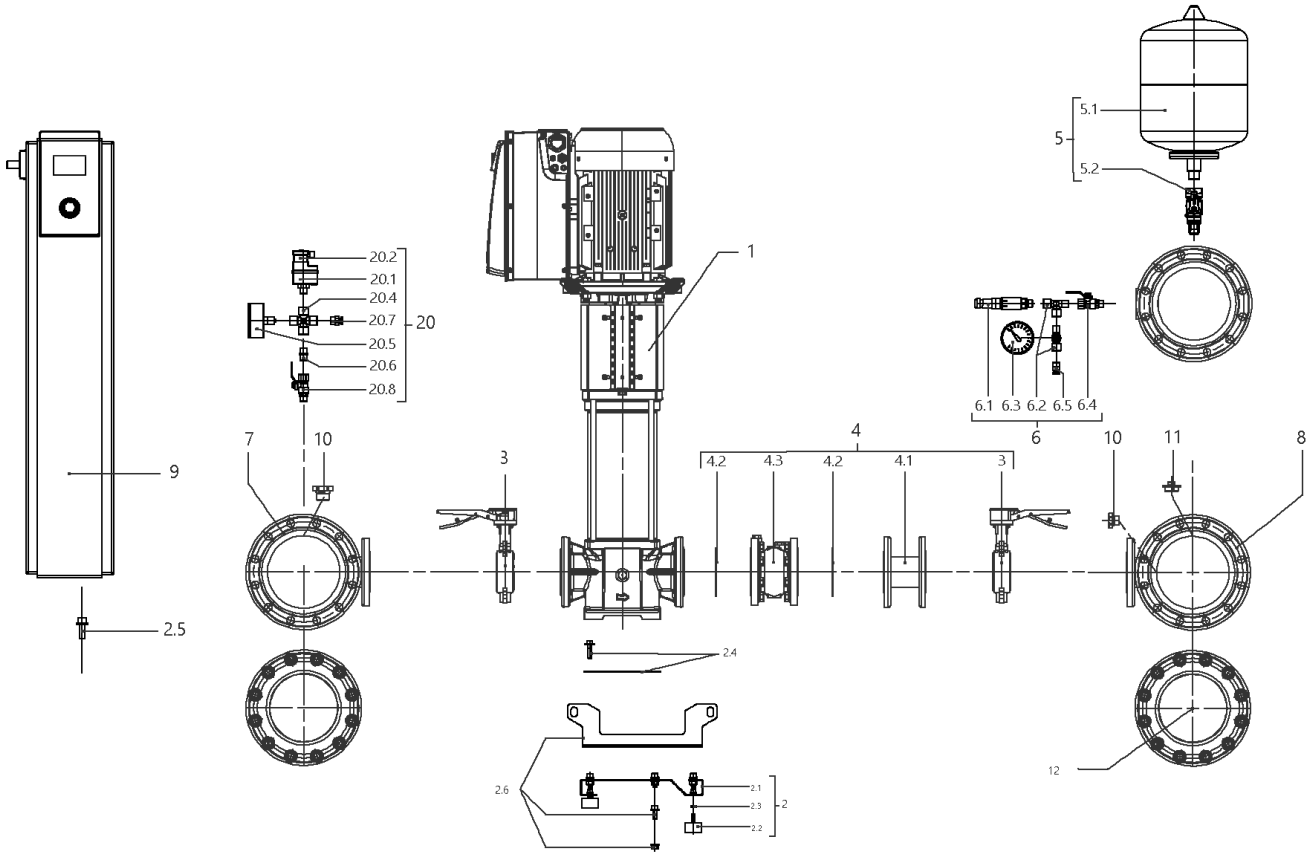
5.1
5
5.2
1
20.2
20.1
20.4
20.7
20
20.5
20.6
20.8
6.1 6.3 6.2 6.5 6.4
6
4
4.2 4.3 4.2 4.1
3
7
10
3
10
11
8
9
2.5
2.4
12
2.6
2.1
2.3
2
2.2

## SiBoost Smart 3HELIX VE5202 (2540929)

| Item | Article no. | Description | Quantity |
|---|---|---|---|
| 1 | | HELIX VE5202-4/16/E/S-FF240 | 1 |
| 2 | 4204910 | BASE PLATE DE3 1750x420 M10 KIT | 1 |
| 2.1 | | > BASE_FR_3x22/36/52V_E500_L400_BOX150-250 | 1 |
| 2.2 | 2027881 | > VIBRATION DAMPER M.10X20 D.70 | 1 |
| 2.3 | 2028281 | > NUT M10 DIN936 (ISO4035) 17H VZ | 1 |
| 2.4 | 4204891 | > HOLDER PUMP Siboost Smart V36/52 KIT | 1 |
| 2.5 | 4197084 | > HOLDER SWITCHBOX WILO Smart Control KIT | 1 |
| 2.6 | 4203979 | > LIFTING Siboost HELIX 22/36 KIT | 1 |
| 3 | | BUTTERFLY VALVE 316 DN80 BLACK PS16 | 1 |
| 4 | 4204922 | DELIVERY SIDE Siboost Helix 52 KIT | 1 |
| 3 | | > BUTTERFLY VALVE 316 DN80 BLACK PS16 | 1 |
| 4.1 | | > FLANGE ADAPTER DN80x125 PN16 AISI304 | 1 |
| 4.2 | 2042897 | > GASKET DN80 PN40 DIN2690 | 1 |
| 4.3 | 4205934 | > CHECK-VALVE-FLANGES-PLUG-DN80-PN16-VP. | 1 |
| 5 | 4203983 | DIAPHREM TANK 8L/PN16 DIN4807/T5 KIT | 1 |
| 5.1 | 2045914 | > DIAPHREM TANK 8L TYP-DD 16BAR | 1 |
| 5.2 | 4189350 | > FLOW FITTING G3/4 FOR DIAPHRAG VESSEL VP | 1 |
| 6 | 4197076 | PRESSURE SENSOR/ GAUGE 0-16BAR KIT | 1 |
| 6.1 | 2085909 | > PRESS.SENSOR 1/4" 0-16BAR 4-20MA VP. | 1 |
| 6.2 | 4197077 | > T-PIECE 1/4" VP. | 1 |
| 6.3 | 2028692 | > PRESSURE GAUGE NG63-PN16-G1/4 | 1 |
| 6.4 | 2028291 | > BALL TAP R1/4" PN42 GIACOMINI R254DL | 1 |
| 6.5 | 2028691 | > BLOWGUN 1/4" MS 30BAR VP. | 1 |
| 7 | 4187227 | PIPE DE3 DN150-3xDN80+2x1/4x1500 VP. | 1 |
| 8 | 4205937 | PIPE DE3 DN150-3xDN80+2x1/4+1x3/4x1500 | 1 |
| 9 | | W-CTRL-SCE-B-3x16A-T34-FM-ND2-MOD-PKG | 1 |
| 10 | 4197079 | PLUG G1/4"x10 AISI304 KIT | 1 |
| 11 | 2032654 | PLUG R3/4" MS VIEGA 1751 | 1 |
| 12 | 4204916 | BLIND-FLANGE DN150 PN10/16-A2 KIT | 1 |
| | 2135807 | > FLAT GASKET D.169/224x2 DN150 C4430 VP. | 1 |
| | | > NUT M20 DIN934 A2 1.4301 | 1 |
| | | > Screw M20X80 ISO4014 A4 | 1 |
| | | > WASHER A21 DIN125 A2 1.4301 | 1 |
| | | > FULL FLANGE ST.DN150 PN16 EN1092-1/05 A2 | 1 |

| Item | Article no. | Description | Quantity |
|---|---|---|---|
| | | > FLANGE COVER DN150 DIN 3443 FORM A | 1 |
| 20 | | ASSEMBLY WMS. DE-EB. +VP | 1 |
| 20.1 | 2028652 | > PRESSURE SWITCH PS3-ASR 1/(1,3) VP. | 1 |
| 20.2 | 2130983 | > PLUG PS3-415 WITH KABEL 1,5M 2NO VP. | 1 |
| 20.4 | 2028290 | > CROSSPIECE R1/4" MS-NICKEL | 1 |
| 20.5 | 2028687 | > PRESSURE GAUGE NG63 R1/4" HI.0-6BAR | 1 |
| 20.6 | 2054268 | > DUAL NIPPLE G1/4" x G1/4" MS VP. | 1 |
| 20.7 | 2028691 | > BLOWGUN 1/4" MS 30BAR VP. | 1 |
| 20.8 | 2028291 | > BALL TAP R1/4" PN42 GIACOMINI R254DL | 1 |

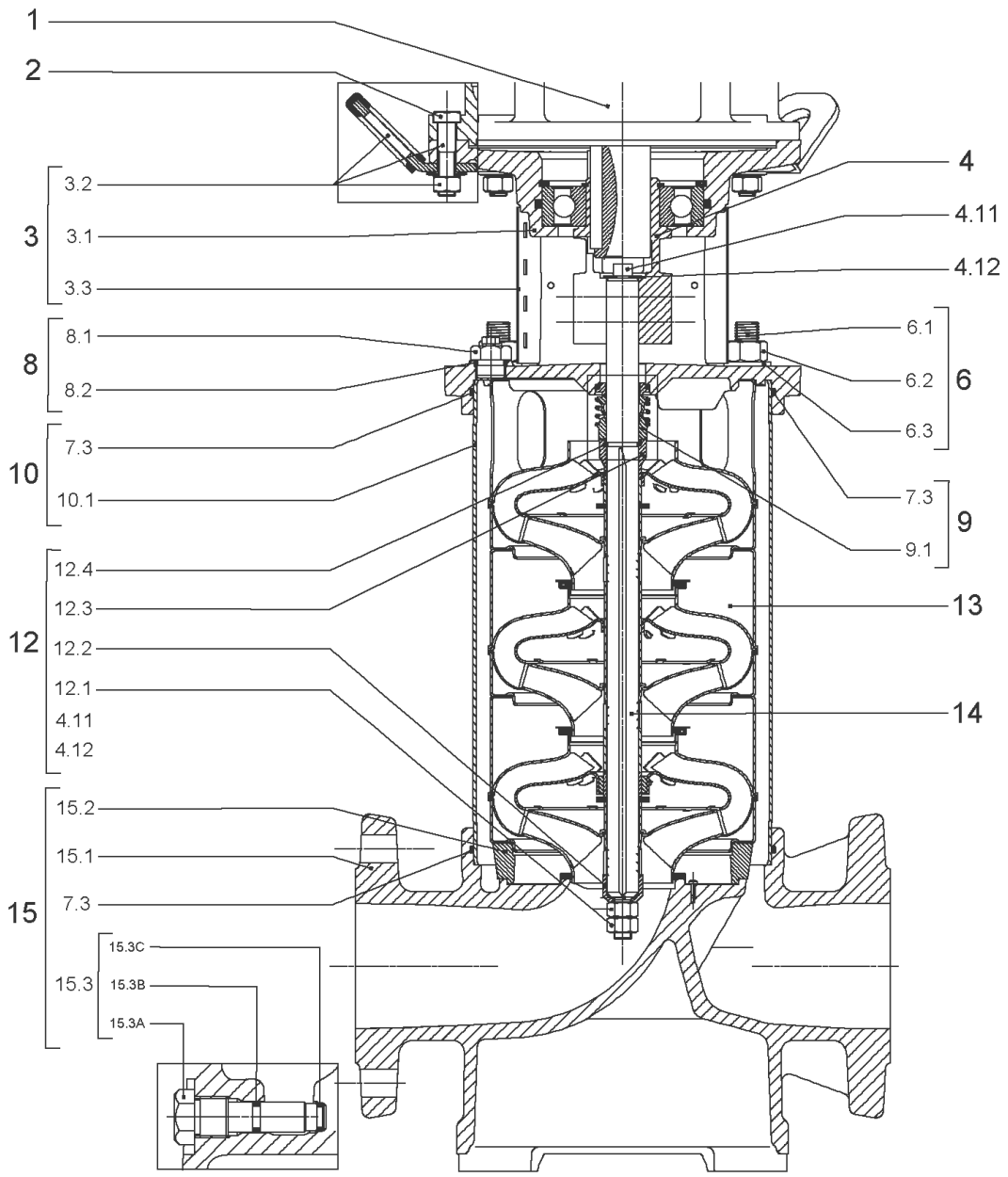
1
2
3
3.2
3.1
3.3
8
8.1
8.2
10
7.3
10.1
12
12.4
12.3
12.2
12.1
4.11
4.12
15
15.2
15.1
7.3
15.3
15.3C
15.3B
15.3A
4
4.11
4.12
6
6.1
6.2
6.3
9
7.3
9.1
13
14

| Item | Article no. | Description | Quantity |
|---|---|---|---|
| 1 | | DRIVE HELIX-VE5202-FF240-IE2-ATB KIT | 1 |
| Note: MOTOR BRAND ATB | | | |
| 1 | | DRIVE HELIX-VE5202-FF240-IE4-WE KIT | 1 |
| Note: MOTOR BRAND WILO ELEC | | | |
| | | SPARE PARTS MOTOR:ON REQUEST | 1 |
| 2 | 4174093 | SCREW M12X50 (4 PIECES) | 1 |
| 3 | 4186358 | LANTERN HELIX OPTI 8" FF240 KIT | 1 |
| 3.1 | | > M+8_LANTERN_ONE-PIECE_FF240_CATA_DWA | 1 |
| 3.2 | 4186346 | > EYELET CPL.FF240 HELIX (4 PIECES) | 1 |
| 3.3 | 4184853 | > COUPLING PROTECTOR FT HELIX 8'' KIT | 1 |
| 4 | 4186347 | COUPLING D.22XD.38 FF240T130 HELIX KIT | 1 |
| 6 | 4180018 | STUD BOLT M16X267 KIT | 1 |
| 6.1 | | > TIE BOLT M16-267x24x44-1.4057 | 1 |
| 6.2 | 4179562 | > NUT M16 8.8 ISO4032 (4 PIECES) | 1 |
| 6.3 | 4097852 | > WASHER-CS-16.4-32-2.8-NFE25-511-A2 | 1 |
| 8 | 4186377 | FILING/PURGING PLUG 304 HELIX KIT | 1 |
| 8.1 | | > FILLING/VENTING-PLUG-MVI8/10"-304 | 1 |
| 8.2 | 4032291 | > O-RING 17x3 EPDM KTW/WRC | 1 |
| 9 | 4192148 | SEAL-KIT-HELIX22-36-52 FIRST O/E | 1 |
| 7.3 | 4179571 | > O-RING HOUSING PIPE HELIX22/36/52 VP. | 1 |
| 9.1 | 4179573 | > M.SEAL.HELIX22-36-52 O/E VP. | 1 |
| 10 | 4179582 | HOUSING PIPE D.204X230 1.4307 KIT | 1 |
| 7.3 | 4179571 | > O-RING HOUSING PIPE HELIX22/36/52 VP. | 1 |
| 10.1 | | > HOUSING-PIPE Ø204-M+5202-304 | 1 |
| 12 | 4186386 | SHAFT EQUIPMENT HELIX 52 FIRST KIT | 1 |
| 13 | | HYDRAULIC HELIX V 5202 | 1 |
| 14 | 4186344 | SHAFT D.22X351 1.4057 VP. | 1 |
| 15 | 4186388 | EQUIPED HOUSING HELIX FIRST DN80 DWA KIT | 1 |
| 15.1 | | > PUMP CASING MONO.GJL M+8" DN80 DWA | 1 |
| 15.2 | | > HYD.SUP.M+8" ONE PIECE HOUSING N80 DWA | 1 |
| 15.3 | 4106048 | > DRAIN/PRIMING PLUG EPDM HELIX FIRST KIT | 1 |
| 15.3A | | >> DRAIN AND PRIMING PLUG-VMI10"-304 | 1 |
| 15.3B | 4032293 | >> O-RING-10x3-EPDM-KTW/WRC | 1 |
| 15.3C | 4233957 | >> O-RING ID.9 EPDM VP. | 1 |

| Item | Article no. | Description | Quantity |
|---|---|---|---|
| 7.3 | 4179571 | > O-RING HOUSING PIPE HELIX22/36/52 VP. | 1 |
| 13.1A | 4161200 | > NECK RING 1.STAGE HELIX V36/52 KIT | 1 |
| | | >> NECK-RING-M+36/52 | 1 |
| | | >> HYDRAULIC SUPPORT CAP M+36/52 304 | 1 |
| | | >> SCREW TCL M3X8 A4 POZIDRIV | 1 |

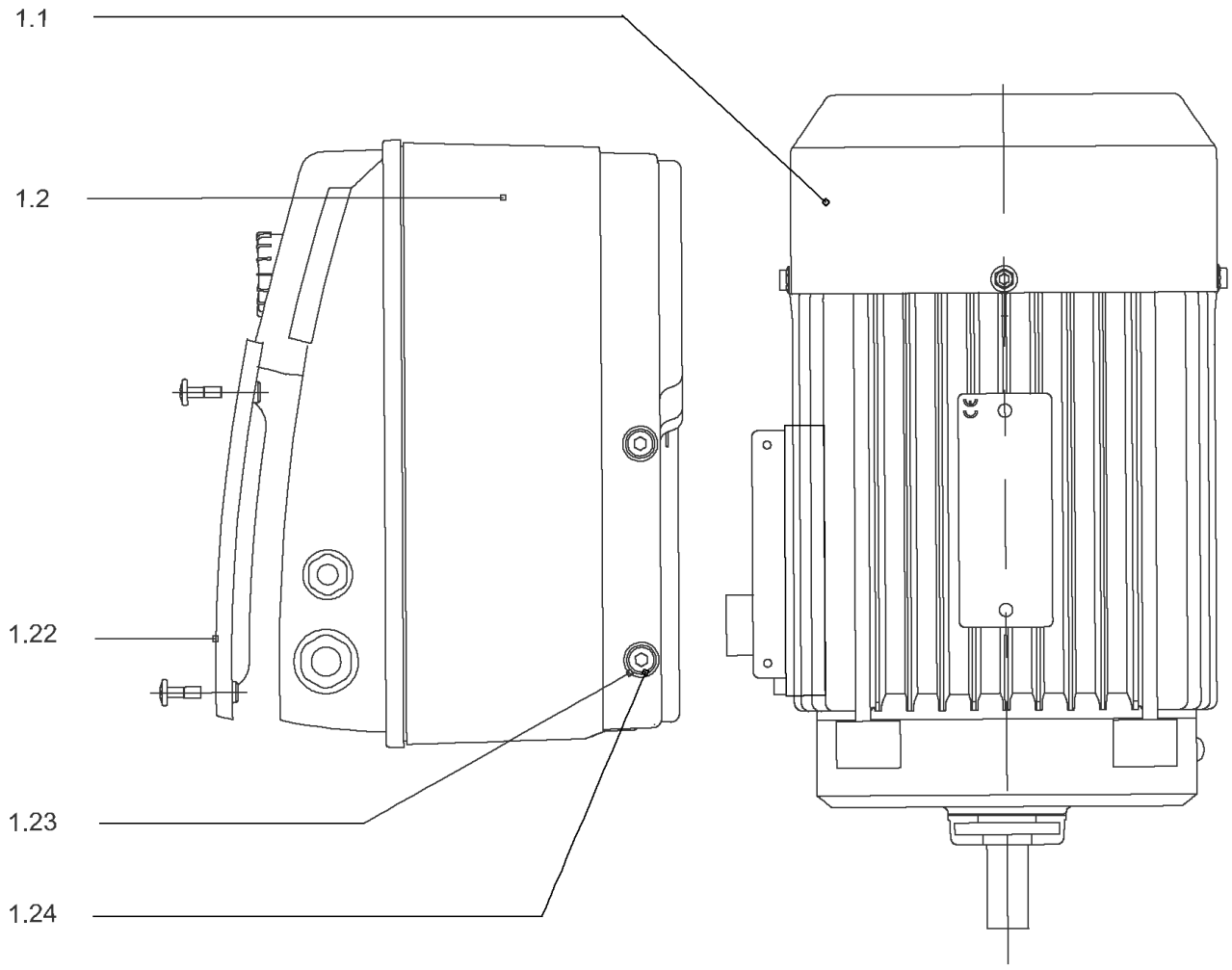
1.1
1.2
1.22
1.23
1.24

## DRIVE HELIX-VE5202-FF240-IE2-ATB KIT

| Item | Article no. | Description | Quantity |
|---|---|---|---|
| | | M7,5-2T540P55V1-132F24-SU-N38-AD-IE2-ATB | 1 |
| Note: no longer available/nicht mehrlieferbar/n'est plus disponible | | | |
| | | SPARE PARTS MOTOR:ON REQUEST | 1 |
| | 4195917 | MODULE HELIX-VE5202-IE2-ATB KIT | 1 |
| 1.22 | 2111344 | > MODULE COVER/GASKET TL5 KIT | 1 |
| 1.23 | 4215716 | > SCREW M5X16 DIN912 8.8 A2A (4pieces) VP. | 1 |
| 1.24 | 2057978 | > RONDELLE A5,3 DIN6797 FST ZN (4 PIECES) | 1 |

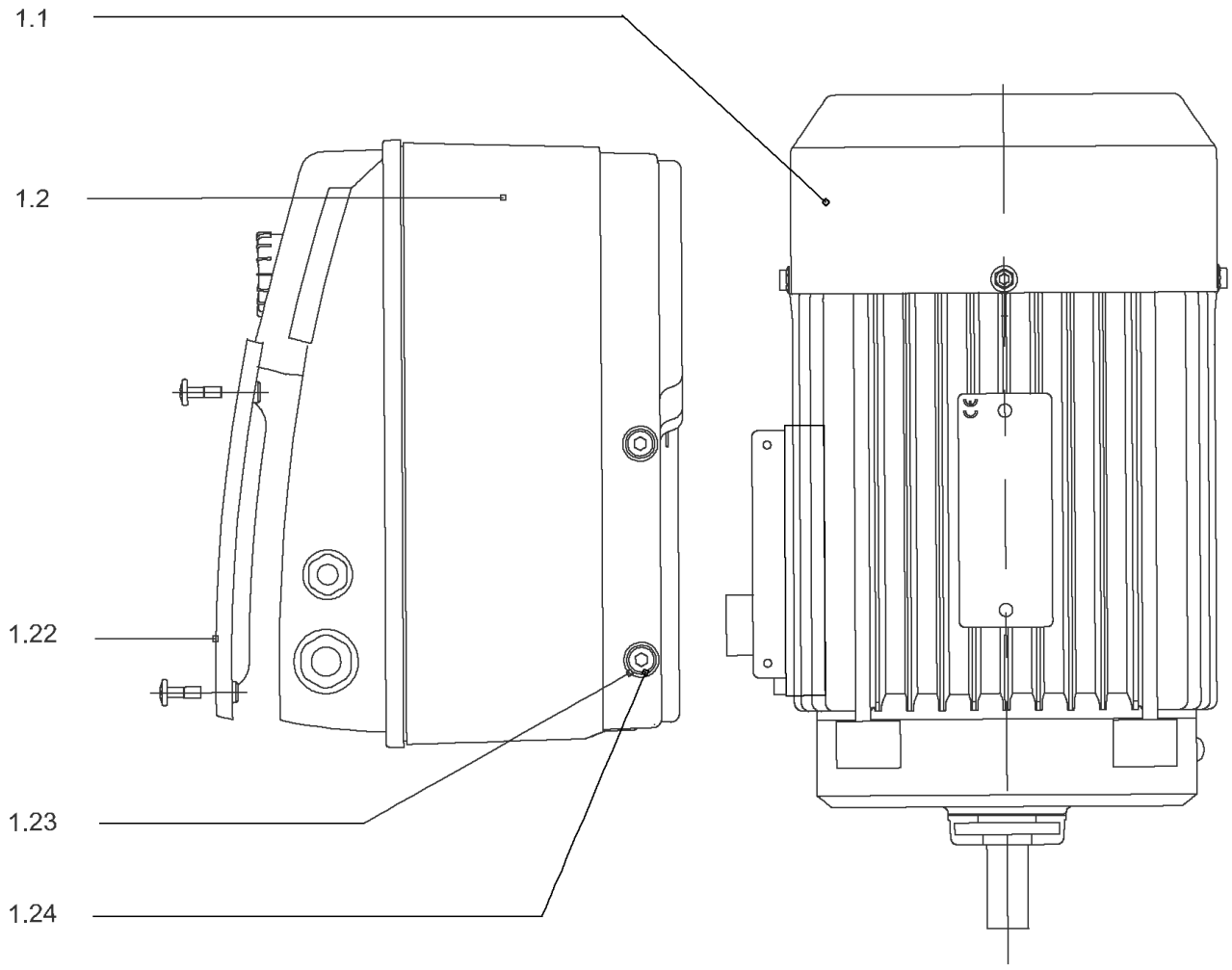
1.1
1.2
1.22
1.23
1.24

## DRIVE HELIX-VE5202-FF240-IE4-WE KIT

| Item | Article no. | Description | Quantity |
|---|---|---|---|
| 1.1 | 4207936 | MO.7.5/2/132FF240 3~400V 50Hz IE4 WE VP. | 1 |
| | | SPARE PARTS MOTOR:ON REQUEST | 1 |
| 1.2 | 4212641 | MODULE HELIX-VE5202-IE4-WE KIT | 1 |
| 1.22 | 2111344 | > MODULE COVER/GASKET TL5 KIT | 1 |
| 1.23 | 4215716 | > SCREW M5X16 DIN912 8.8 A2A (4pieces) VP. | 1 |
| 1.24 | 2057978 | > RONDELLE A5,3 DIN6797 FST ZN (4 PIECES) | 1 |

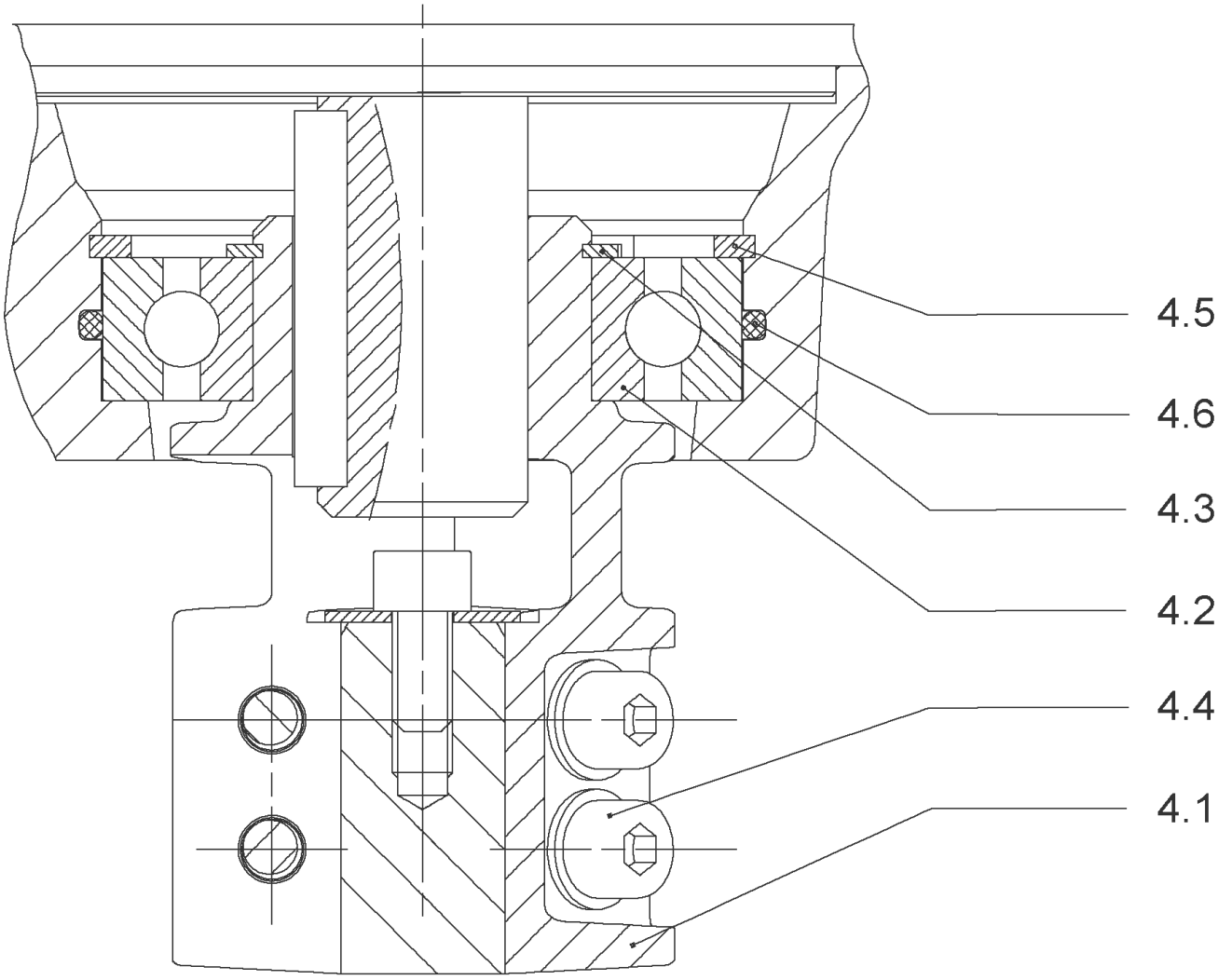
4.5
4.6
4.3
4.2
4.4
4.1

## COUPLING D.22XD.38 FF240T130 HELIX KIT (4186347)

| Item | Article no. | Description | Quantity |
|---|---|---|---|
| 4.1 | | COUPLING-VMI-D22xD38-FF265-MACHINED | 1 |
| 4.2 | 2131017 | BALL BEARING 6310/ZZ-C4(HT)VP. | 1 |
| 4.3 | 4234253 | CIRCLIP-FOR-SHAFT-D50x2 VP. | 1 |
| 4.4 | 4157726 | SCREW KIT M8X30 (4 PIECES) | 1 |
| 4.5 | 4234255 | CIRCLIPS 110X4 VP. | 1 |
| 4.6 | 4233944 | O-RING ID.110 VP. | 1 |
| | | NOMEL CONTACT WASHER 8x16x1,4 STEEL ZC | 1 |

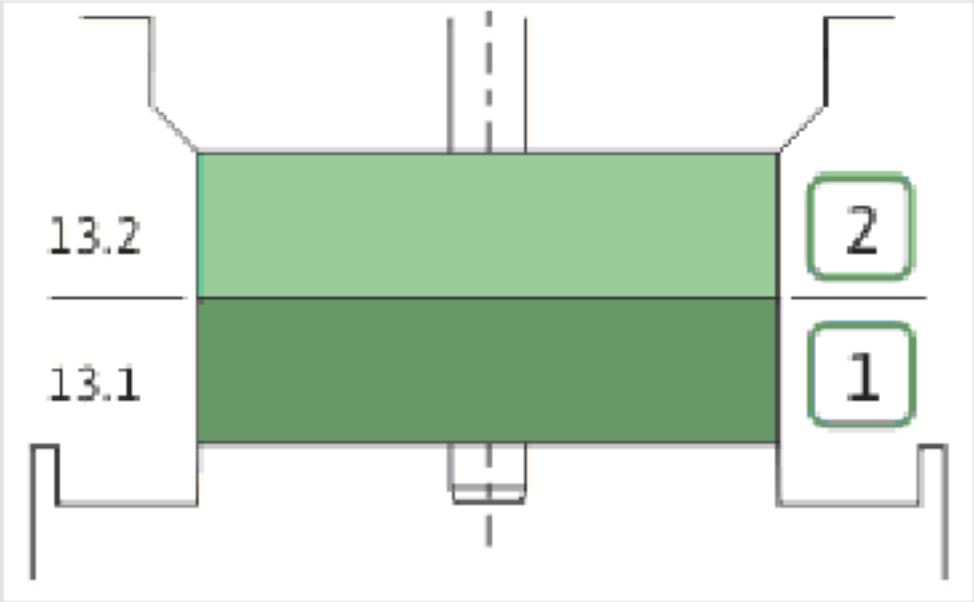
13.2
13.1
2
1

| Item | Article no. | Description | Quantity |
|---|---|---|---|
| 13.1 | 4164727 | INTERMEDIAIRE STAGE HELIX 52 1.4301 KIT | 1 |
| | | > SLEEVE-SPACER-D22XL30,42-316L | 1 |
| | | > MACH.BEARING-DIFFUSER+NR-M+52-304 | 1 |
| | | > SHAFT-SLEEVE-D26xD22x16-CW | 1 |
| | | > SPACER WASHER D22,3XD36 L3-316L | 1 |
| | | > IMPELLER-H2-M+52-304 | 1 |
| 13.1A | 4161200 | > NECK RING 1.STAGE HELIX V36/52 KIT | 1 |
| | | >> NECK-RING-M+36/52 | 1 |
| | | >> HYDRAULIC SUPPORT CAP M+36/52 304 | 1 |
| | | >> SCREW TCL M3X8 A4 POZIDRIV | 1 |
| 13.2 | 4164729 | UPPER-STAGE HELIX 52 1.4301 KIT | 1 |
| | | > STOP COLLAR OF IMPELLER L27,6-Ø22-316L | 1 |
| | | > SLEEVE-SPACER-D22XL16,66-316L | 1 |
| | | > SPACER WASHER D22,3XD36 L3-316L | 1 |
| | | > IMPELLER-H2-M+52-304 | 1 |
| | | > MACH.STD-DISCHARGE-CHAMBER-M+52-304 | 1 |

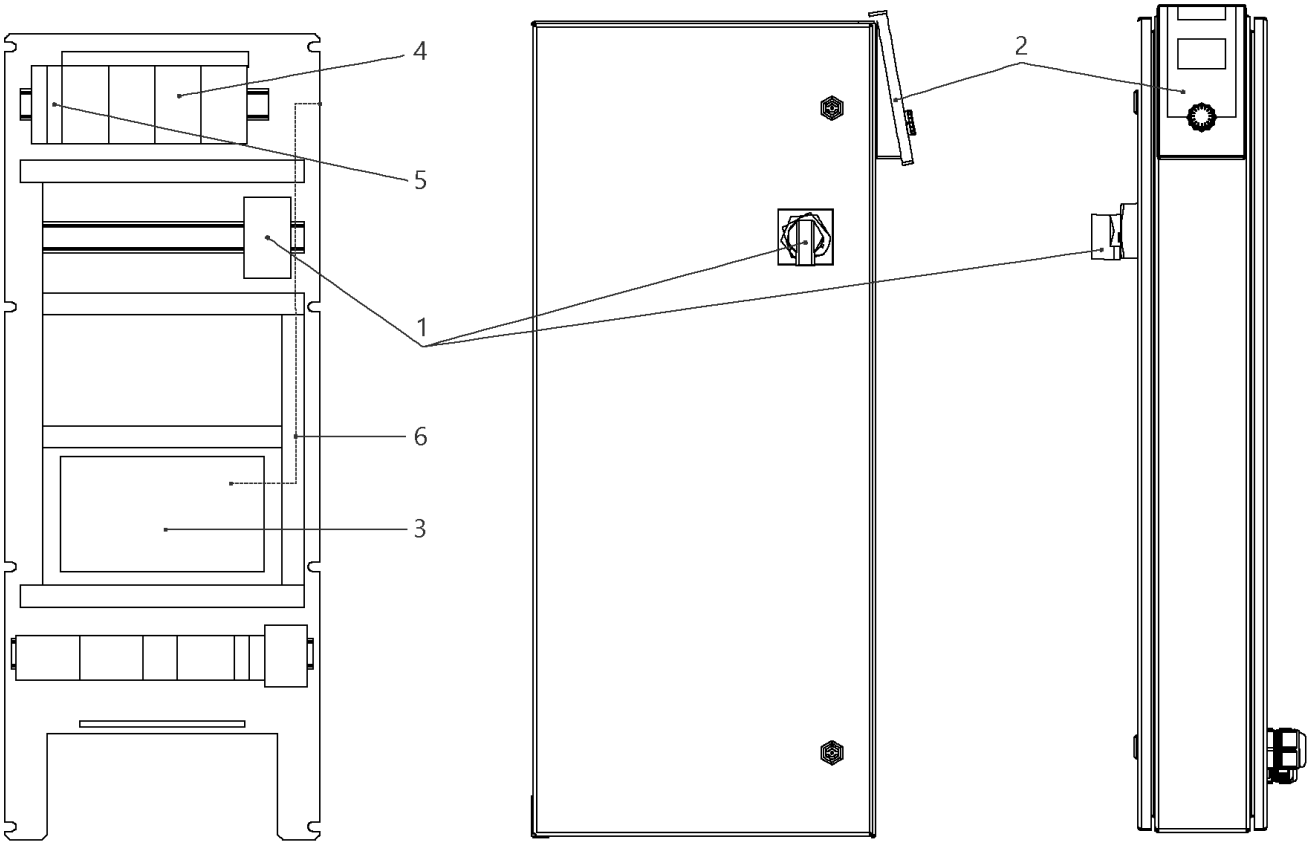
4
5
1
6
3
2

## W-CTRL-SCE-B-3x16A-T34-FM-ND2-MOD-PKG

| Item | Article no. | Description | Quantity |
|---|---|---|---|
| 1 | 2104473 | MAIN SWITCH OT63F3 L105 KIT | 1 |
| 2 | 4184784 | CONTROL PANEL HMI SC KIT | 1 |
| 2 | 4185259 | ASSEMBLY DISPLAY SC PKG VP. | 1 |
| Note: DISPLAY ALONE / PLATINE SEULE | | | |
| 3 | 4185257 | ASSEMBLY CPU SCe Booster VP. | 1 |
| 4 | 4197832 | AUTOMATIC CIRCUIT BREAKER S203 B20 VP. | 1 |
| 5 | 2046288 | CIRCUIT BREAKER S201 B16 | 1 |
| 6 | 4194956 | PATCH CABLE RJ45 CAT6 1,0M BLUE SC-PANEL | 1 |

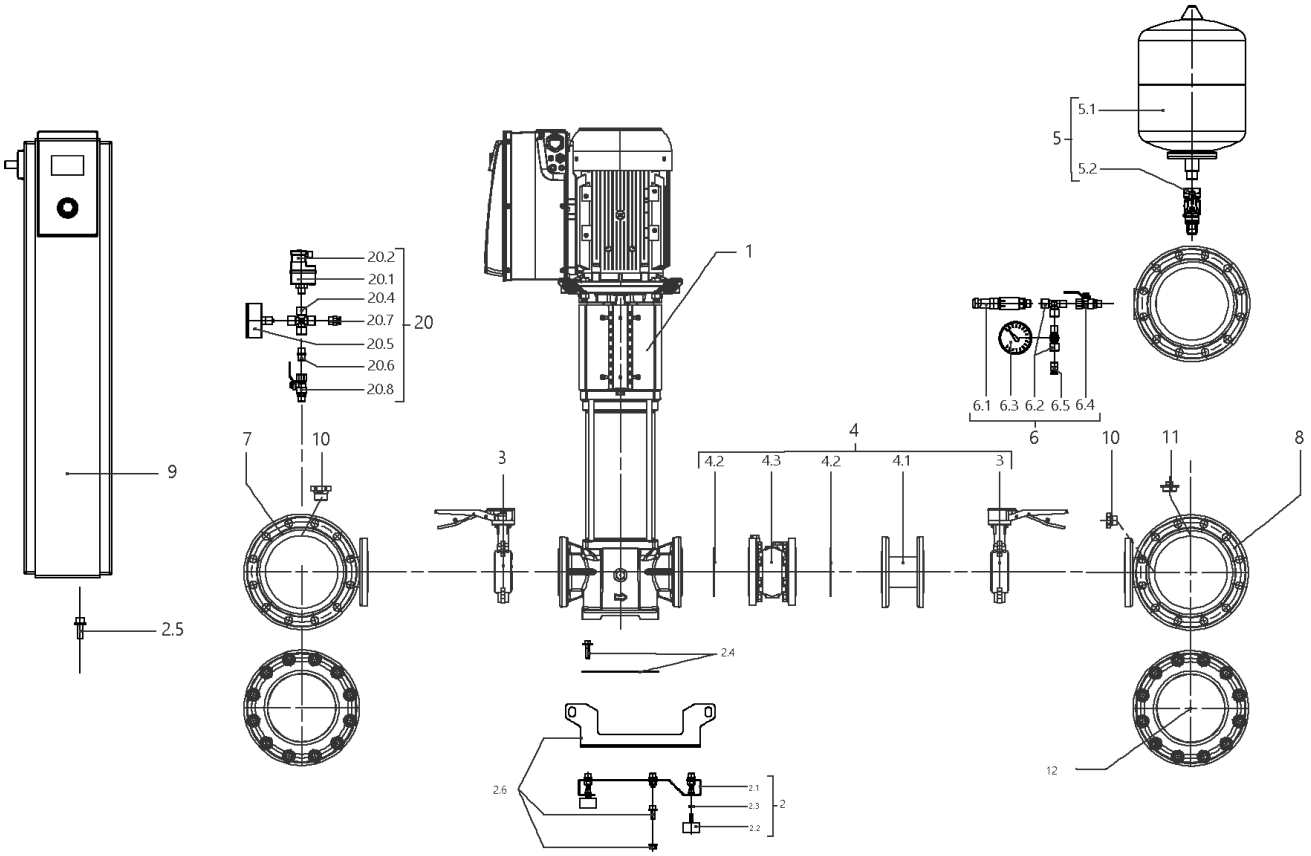
5.1
5
5.2
1
20.2
20.1
20.4
20.7
20
20.5
20.6
20.8
6.1 6.3 6.2 6.5 6.4
6
4
4.2 4.3 4.2 4.1
3
7
10
3
10
11
8
9
2.5
2.4
12
2.6
2.1
2.3
2
2.2

## SiBoost Smart 3HELIX VE5203 (2540930)

| Item | Article no. | Description | Quantity |
|---|---|---|---|
| 1 | | HELIX VE5203-4/16/E/KS/2G | 1 |
| 2 | 4204910 | BASE PLATE DE3 1750x420 M10 KIT | 1 |
| 2.1 | | > BASE_FR_3x22/36/52V_E500_L400_BOX150-250 | 1 |
| 2.2 | 2027881 | > VIBRATION DAMPER M.10X20 D.70 | 1 |
| 2.3 | 2028281 | > NUT M10 DIN936 (ISO4035) 17H VZ | 1 |
| 2.4 | 4204891 | > HOLDER PUMP Siboost Smart V36/52 KIT | 1 |
| 2.5 | 4197084 | > HOLDER SWITCHBOX WILO Smart Control KIT | 1 |
| 2.6 | 4203979 | > LIFTING Siboost HELIX 22/36 KIT | 1 |
| 3 | | BUTTERFLY VALVE 316 DN80 BLACK PS16 | 1 |
| 4 | 4204922 | DELIVERY SIDE Siboost Helix 52 KIT | 1 |
| 3 | | > BUTTERFLY VALVE 316 DN80 BLACK PS16 | 1 |
| 4.1 | | > FLANGE ADAPTER DN80x125 PN16 AISI304 | 1 |
| 4.2 | 2042897 | > GASKET DN80 PN40 DIN2690 | 1 |
| 4.3 | 4205934 | > CHECK-VALVE-FLANGES-PLUG-DN80-PN16-VP. | 1 |
| 5 | 4203983 | DIAPHREM TANK 8L/PN16 DIN4807/T5 KIT | 1 |
| 5.1 | 2045914 | > DIAPHREM TANK 8L TYP-DD 16BAR | 1 |
| 5.2 | 4189350 | > FLOW FITTING G3/4 FOR DIAPHRAG VESSEL VP | 1 |
| 6 | 4197076 | PRESSURE SENSOR/ GAUGE 0-16BAR KIT | 1 |
| 6.1 | 2085909 | > PRESS.SENSOR 1/4" 0-16BAR 4-20MA VP. | 1 |
| 6.2 | 4197077 | > T-PIECE 1/4" VP. | 1 |
| 6.3 | 2028692 | > PRESSURE GAUGE NG63-PN16-G1/4 | 1 |
| 6.4 | 2028291 | > BALL TAP R1/4" PN42 GIACOMINI R254DL | 1 |
| 6.5 | 2028691 | > BLOWGUN 1/4" MS 30BAR VP. | 1 |
| 7 | 4187227 | PIPE DE3 DN150-3xDN80+2x1/4x1500 VP. | 1 |
| 8 | 4205937 | PIPE DE3 DN150-3xDN80+2x1/4+1x3/4x1500 | 1 |
| 9 | | W-CTRL-SCE-B-3x24A-T34-FM-ND4-AVC-PKG | 1 |
| 10 | 4197079 | PLUG G1/4"x10 AISI304 KIT | 1 |
| 11 | 2032654 | PLUG R3/4" MS VIEGA 1751 | 1 |
| 12 | 4204916 | BLIND-FLANGE DN150 PN10/16-A2 KIT | 1 |
| | 2135807 | > FLAT GASKET D.169/224x2 DN150 C4430 VP. | 1 |
| | | > NUT M20 DIN934 A2 1.4301 | 1 |
| | | > Screw M20X80 ISO4014 A4 | 1 |
| | | > WASHER A21 DIN125 A2 1.4301 | 1 |
| | | > FULL FLANGE ST.DN150 PN16 EN1092-1/05 A2 | 1 |

| Item | Article no. | Description | Quantity |
|---|---|---|---|
| | | > FLANGE COVER DN150 DIN 3443 FORM A | 1 |
| 20 | | ASSEMBLY WMS. DE-EB. +VP | 1 |
| 20.1 | 2028652 | > PRESSURE SWITCH PS3-ASR 1/(1,3) VP. | 1 |
| 20.2 | 2130983 | > PLUG PS3-415 WITH KABEL 1,5M 2NO VP. | 1 |
| 20.4 | 2028290 | > CROSSPIECE R1/4" MS-NICKEL | 1 |
| 20.5 | 2028687 | > PRESSURE GAUGE NG63 R1/4" HI.0-6BAR | 1 |
| 20.6 | 2054268 | > DUAL NIPPLE G1/4" x G1/4" MS VP. | 1 |
| 20.7 | 2028691 | > BLOWGUN 1/4" MS 30BAR VP. | 1 |
| 20.8 | 2028291 | > BALL TAP R1/4" PN42 GIACOMINI R254DL | 1 |

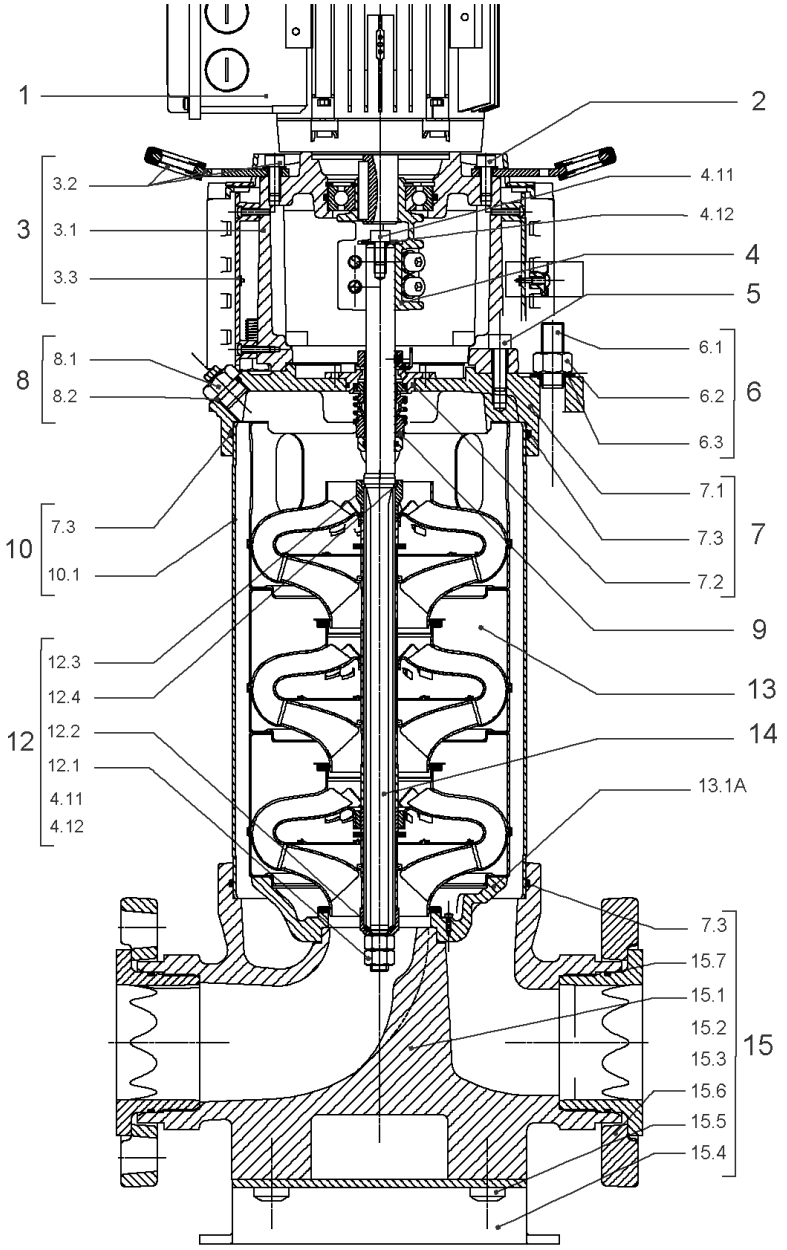
1
2
3
3.2
3.1
3.3
4.11
4.12
4
5
8
8.1
8.2
6.1
6.2
6.3
6
7.1
7.3
7.2
7
10
7.3
10.1
9
12
12.3
12.4
12.2
12.1
4.11
4.12
13
14
13.1A
7.3
15.7
15.1
15.2
15.3
15.6
15.5
15.4
15

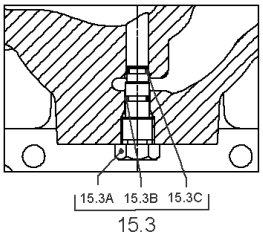
15.3A
15.3B
15.3C
15.3

| Item | Article no. | Description | Quantity |
|---|---|---|---|
| 1 | | DRIVE HELIX VE5203-IE2-ARC KIT | 1 |
| Note: no longer available/nicht mehrlieferbar/n'est plus disponible | | | |
| 1 | 4218538 | DRIVE HELIX VE5203-IE4-WEG KIT | 1 |
| Note: MOTOR BRAND WEG | | | |
| 2 | 4179586 | SCREW M16X60 (4 PIECES) | 1 |
| 3 | 4157721 | LANTERN HELIX 22/36 FF300 BB6312 KIT | 1 |
| 3.1 | | > LANTERN FF300 M+ GJL MACHINED+CATA 6312 | 1 |
| 3.2 | 4179589 | > EYELET CPL.FF300 HELIX(4 PIECES) | 1 |
| 3.3 | 4143969 | > COUPLING PROTECT HELIX FF KIT | 1 |
| 4 | 4143966 | COUPLING D.20XD.38 FF300 KIT | 1 |
| 5 | 4157725 | SCREW M10X40 (4 PIECES) | 1 |
| 6 | 4179592 | STUD BOLT M16X405 KIT | 1 |
| 6.1 | | > TIE BOLT M16-405x24x44-1.4057 | 1 |
| 6.2 | 4179562 | > NUT M16 8.8 ISO4032 (4 PIECES) | 1 |
| 6.3 | 4097852 | > WASHER-CS-16.4-32-2.8-NFE25-511-A2 | 1 |
| 7 | 4179565 | END SHIELD HELIX 8'' EPDM KIT | 1 |
| 7.1 | | > END SHIELD M+ GJL MACHINED+CATA | 1 |
| 7.2 | 4179564 | > O-RING D.42.52x2.62 EPDM VP. | 1 |
| 7.3 | 4179571 | > O-RING HOUSING PIPE HELIX22/36/52 VP. | 1 |
| 8 | 4186377 | FILING/PURGING PLUG 304 HELIX KIT | 1 |
| 8.1 | | > FILLING/VENTING-PLUG-MVI8/10"-304 | 1 |
| 8.2 | 4032291 | > O-RING 17x3 EPDM KTW/WRC | 1 |
| 9 | 4143973 | CARTRIDGE HELIX22-36-52 O/E KIT | 1 |
| 10 | 4179593 | HOUSING PIPE D.204X330 1.4307 KIT | 1 |
| 7.3 | 4179571 | > O-RING HOUSING PIPE HELIX22/36/52 VP. | 1 |
| 10.1 | | > HOUSING-PIPE Ø204-M+3604/5203-304 | 1 |
| 11 | 4179583 | CENTRALIZER HELIX 8'' 52 VP. | 1 |
| 12 | 4164724 | SHAFT EQUIPMENT HELIX V52 KIT | 1 |
| 13 | | HYDRAULIC HELIX V 5203 | 1 |
| 14 | 4179599 | SHAFTS D.22X504 1.4057 VP. | 1 |
| 15 | 4186388 | EQUIPED HOUSING HELIX FIRST DN80 DWA KIT | 1 |
| 15.1 | | > PUMP CASING MONO.GJL M+8" DN80 DWA | 1 |
| 15.2 | | > HYD.SUP.M+8" ONE PIECE HOUSING N80 DWA | 1 |
| 15.3 | 4106048 | > DRAIN/PRIMING PLUG EPDM HELIX FIRST KIT | 1 |

| Item | Article no. | Description | Quantity |
|---|---|---|---|
| 15.3A | | >> DRAIN AND PRIMING PLUG-VMI10"-304 | 1 |
| 15.3B | 4032293 | >> O-RING-10x3-EPDM-KTW/WRC | 1 |
| 15.3C | 4233957 | >> O-RING ID.9 EPDM VP. | 1 |
| 7.3 | 4179571 | > O-RING HOUSING PIPE HELIX22/36/52 VP. | 1 |
| 13.1A | 4161200 | > NECK RING 1.STAGE HELIX V36/52 KIT | 1 |
| | | >> NECK-RING-M+36/52 | 1 |
| | | >> HYDRAULIC SUPPORT CAP M+36/52 304 | 1 |
| | | >> SCREW TCL M3X8 A4 POZIDRIV | 1 |

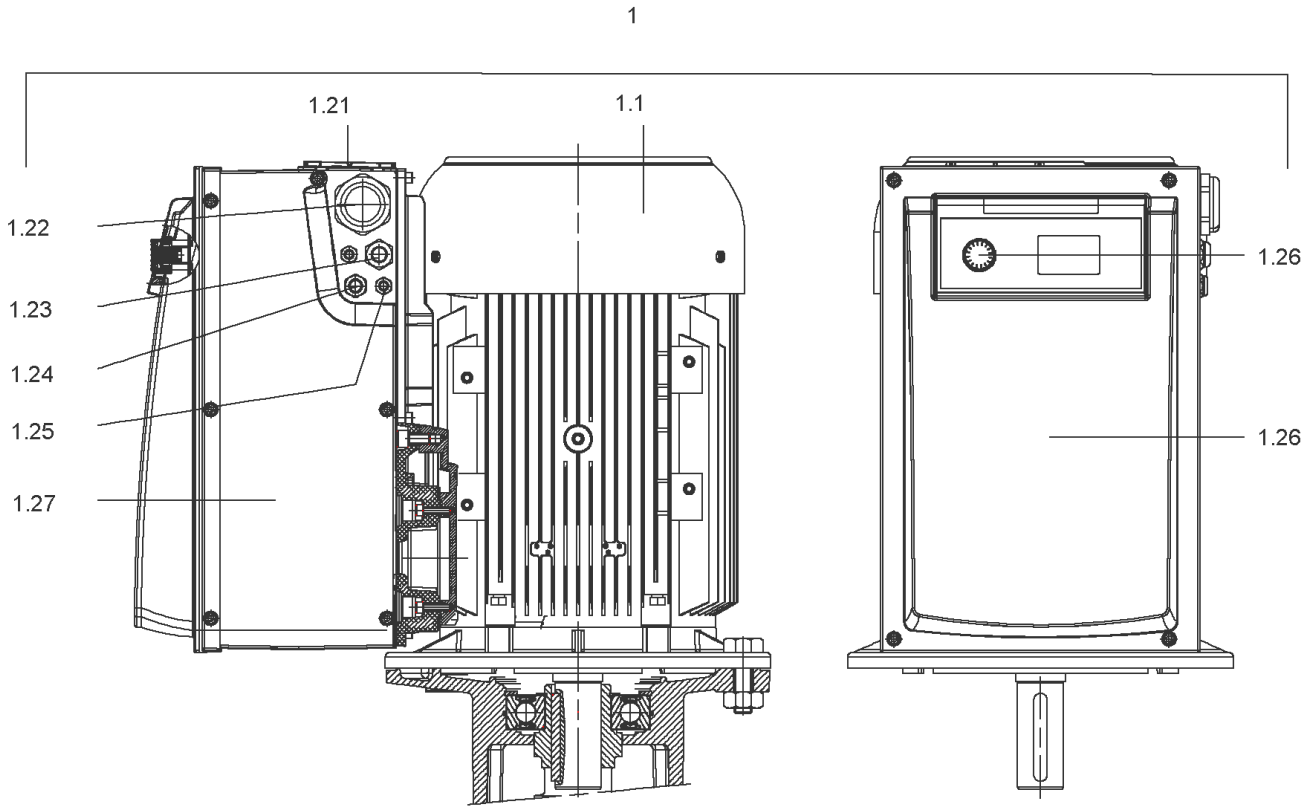
1
1.21
1.1
1.22
1.23
1.24
1.25
1.27
1.26
1.26

## DRIVE HELIX VE5203-IE2-ARC KIT

| Item | Article no. | Description | Quantity |
|---|---|---|---|
| 1.1 | | M11-2T540P55V1-160F300-N42-IE2 | 1 |
| | | SPARE PARTS MOTOR:ON REQUEST | 1 |
| 1.21 | 2132102 | FAN SMALL TL6/7 FF KIT | 1 |
| 1.25 | 2132097 | CABLE CONNECTION M12 TL6/7 FF VP. | 1 |
| 1.24 | 2132098 | CABLE CONNECTION M16 TL6/7 FF VP. | 1 |
| 1.23 | 2132099 | CABLE CONNECTION M20 TL6/7 FF VP. | 1 |
| 1.22 | 2132100 | CABLE CONNECTION SMALL M40 TL6/7 FF VP. | 1 |
| 1.27 | 2132104 | COVER SIDE TL6/7 FF CPL.VP. | 1 |
| 1.26 | 2132452 | MODULE COVER/BUTTON TL6/7 FF VP. | 1 |

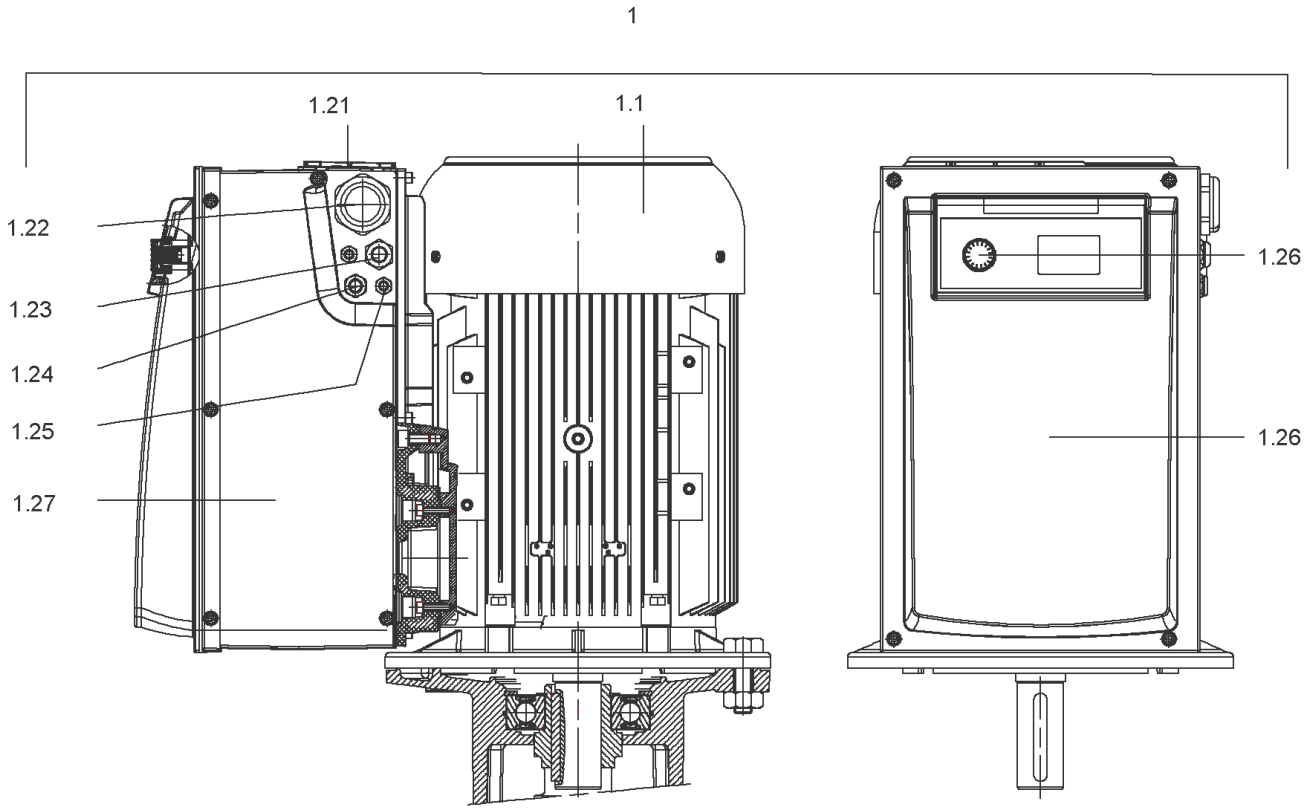
1
1.21
1.1
1.22
1.23
1.24
1.25
1.27
1.26
1.26

## DRIVE HELIX VE5203-IE4-WEG KIT (4218538)

| Item | Article no. | Description | Quantity |
|---|---|---|---|
| 1.1 | | M11-2T540P55V1-160F30-N42-ADAPT-IE4-WEG | 1 |
| | | SPARE PARTS MOTOR:ON REQUEST | 1 |
| 1.21 | 2132102 | FAN SMALL TL6/7 FF KIT | 1 |
| 1.25 | 2132097 | CABLE CONNECTION M12 TL6/7 FF VP. | 1 |
| 1.24 | 2132098 | CABLE CONNECTION M16 TL6/7 FF VP. | 1 |
| 1.23 | 2132099 | CABLE CONNECTION M20 TL6/7 FF VP. | 1 |
| 1.22 | 2132100 | CABLE CONNECTION SMALL M40 TL6/7 FF VP. | 1 |
| 1.27 | 2132104 | COVER SIDE TL6/7 FF CPL.VP. | 1 |
| 1.26 | 2132452 | MODULE COVER/BUTTON TL6/7 FF VP. | 1 |

## COUPLING D.20XD.38 FF300 KIT (4143966)

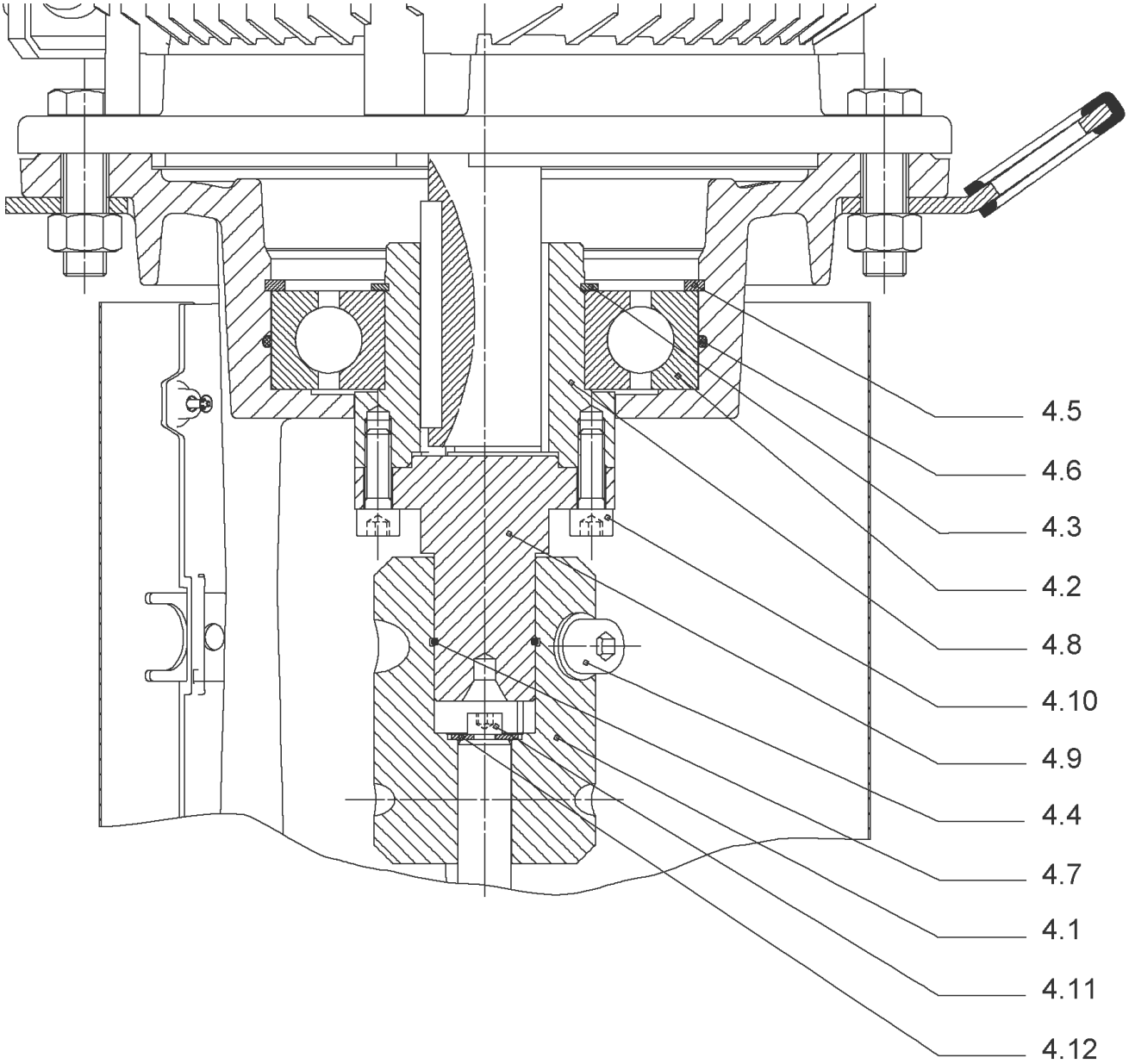

## COUPLING D.20XD.38 FF300 KIT (4143966)

| Item | Article no. | Description | Quantity |
|---|---|---|---|
| 4.1 | 4179590 | COUPLING 2 PARTS D.20XD.38XL115 VP. | 1 |
| 4.2 | 2123699 | BALL BEARING 6312/2Z-C4 (HT) VP. | 1 |
| 4.3 | 63428 | CIRCLIP-FOR-SHAFT-D60x2 | 1 |
| 4.4 | 2130991 | SCREW M12X30 ISO4762 8.8 ZN(4 PIECES) | 1 |
| 4.5 | 4032277 | CIRCLIP-HOLE-130x4 | 1 |
| 4.6 | 4006725 | O-RING ID.132,94x3,53 NBR70SR | 1 |
| 4.7 | 2130992 | RETAINING RING D.35xD.2,5 DIN7993 VP. | 1 |
| 4.8 | 4179591 | HUB D.42xD.60 VP. | 1 |
| 4.9 | 2130994 | SPACER D.38XD.55 VP. | 1 |
| 4.10 | 4094462 | SCREWS M10 ( 4 PIECES ) | 1 |
| 4.11 | 4233959 | SCREW M8x16 VP. | 1 |
| 4.12 | | SERRATED LOCK WASHER Ø8.2XØ25X35X2 | 1 |

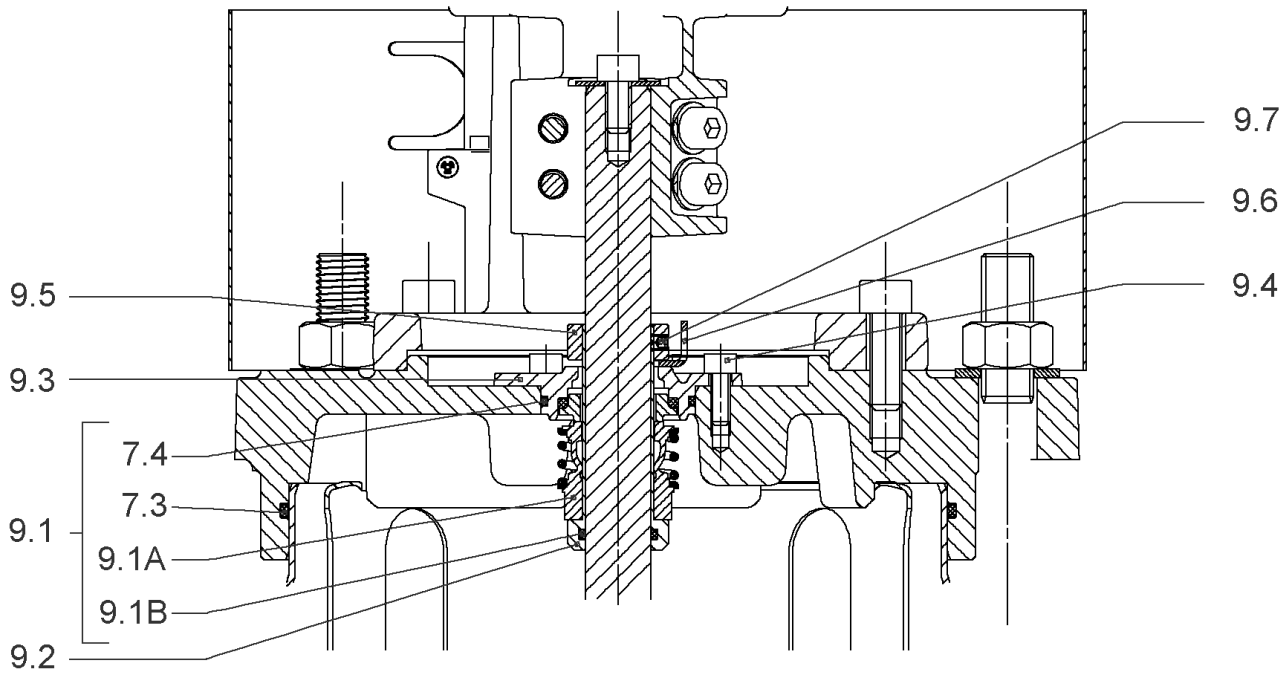
9.7
9.6
9.4
9.5
9.3
7.4
7.3
9.1
9.1A
9.1B
9.2

## CARTRIDGE HELIX22-36-52 O/E KIT (4143973)

| Item | Article no. | Description | Quantity |
|---|---|---|---|
| 9.1 | 4143974 | SEAL-KIT-HELIX22-36-52 O/E | 1 |
| 7.3 | 4179571 | > O-RING HOUSING PIPE HELIX22/36/52 VP. | 1 |
| 7.4 | 4179572 | > O-RING ID.42.52X2.62 EPDM VP. | 1 |
| 9.1A | 4179573 | > M.SEAL.HELIX22-36-52 O/E VP. | 1 |
| 9.1B | 4179574 | > O-RING ID.20x2.65 EPDM VP. | 1 |
| 9.2 | 4179566 | SHAFT SLEEVE D.20/20X60 1.4404 VP. | 1 |
| 9.3 | 4179567 | RING HOLDER Ø22 1.4301 VP. | 1 |
| 9.4 | 4176520 | SCREW CH M5x5 A4-70 ( 3PIECES ) | 1 |
| 9.5 | 4179568 | DRIVE RING D.31/22.1x11 MACH.VP. | 1 |
| 9.6 | 4179569 | TOOL M.S.CART.HELIX 8'' VP. | 1 |
| 9.7 | 4179570 | SCREW M6X16 ISO4762 8.8 GEOMET(4 PIECES) | 1 |

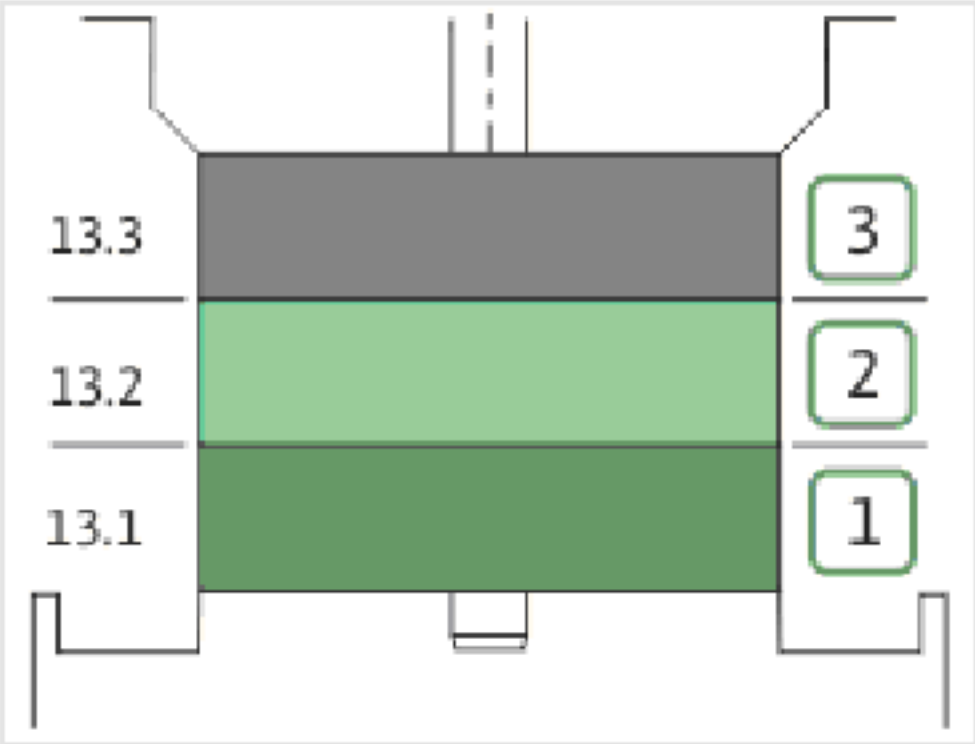
13.3
13.2
13.1
3
2
1

| Item | Article no. | Description | Quantity |
|---|---|---|---|
| 13.1 | 4164727 | INTERMEDIAIRE STAGE HELIX 52 1.4301 KIT | 1 |
| | | > SLEEVE-SPACER-D22XL30,42-316L | 1 |
| | | > MACH.BEARING-DIFFUSER+NR-M+52-304 | 1 |
| | | > SHAFT-SLEEVE-D26xD22x16-CW | 1 |
| | | > SPACER WASHER D22,3XD36 L3-316L | 1 |
| | | > IMPELLER-H2-M+52-304 | 1 |
| 13.1A | 4161200 | > NECK RING 1.STAGE HELIX V36/52 KIT | 1 |
| | | >> NECK-RING-M+36/52 | 1 |
| | | >> HYDRAULIC SUPPORT CAP M+36/52 304 | 1 |
| | | >> SCREW TCL M3X8 A4 POZIDRIV | 1 |
| 13.2 | 4164728 | INTERMEDIATE STAGE HELIX 52 1.4301 KIT | 1 |
| | | > MACH.STD-DIFFUSER+NR-M+52-304 | 1 |
| | | > IMPELLER-H5-M+52-304 | 1 |
| 13.3 | 4164729 | UPPER-STAGE HELIX 52 1.4301 KIT | 1 |
| | | > STOP COLLAR OF IMPELLER L27,6-Ø22-316L | 1 |
| | | > SLEEVE-SPACER-D22XL16,66-316L | 1 |
| | | > SPACER WASHER D22,3XD36 L3-316L | 1 |
| | | > IMPELLER-H2-M+52-304 | 1 |
| | | > MACH.STD-DISCHARGE-CHAMBER-M+52-304 | 1 |

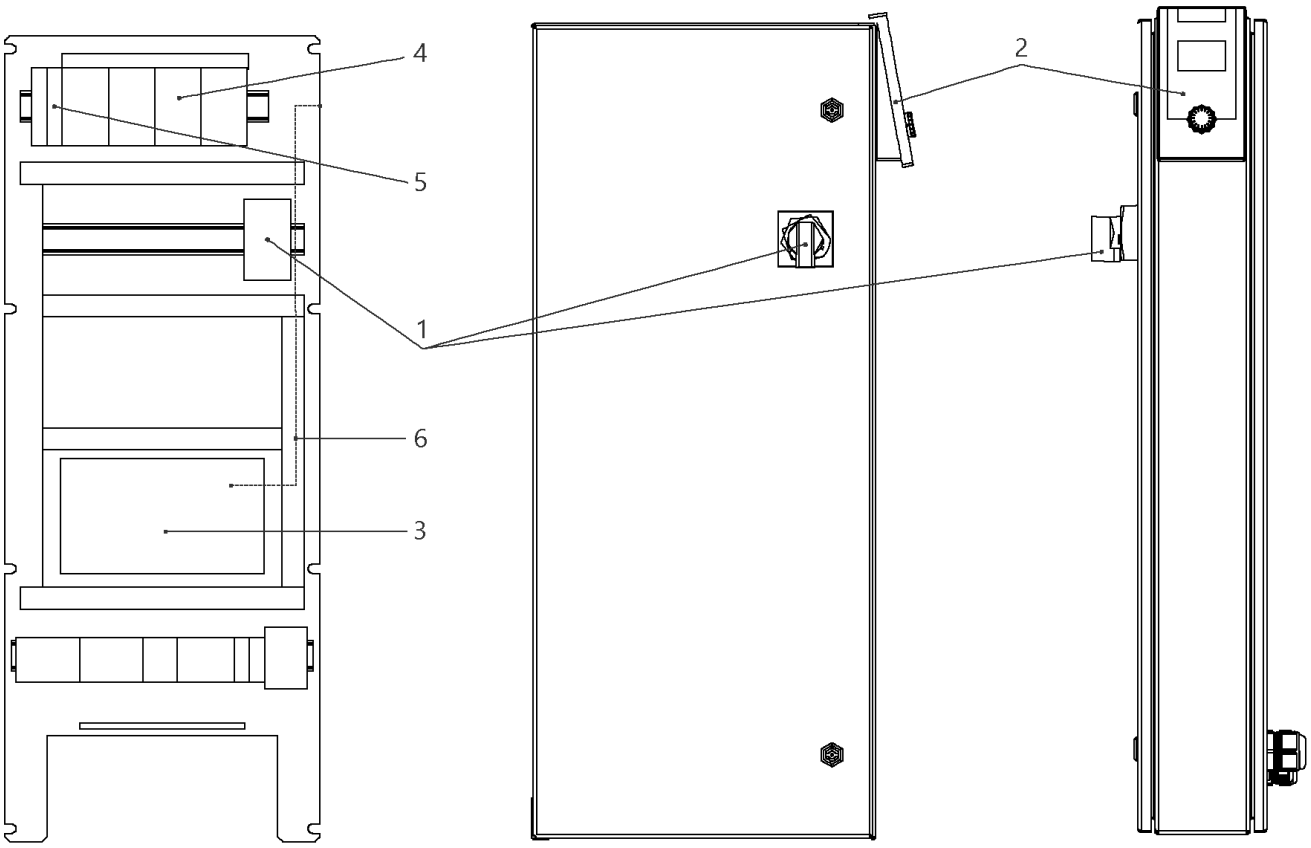
4
5
1
6
3
2

## W-CTRL-SCE-B-3x24A-T34-FM-ND4-AVC-PKG

| Item | Article no. | Description | Quantity |
|---|---|---|---|
| 1 | 2104465 | MAIN SWITCH OT100F3 L250 KIT | 1 |
| 2 | 4184784 | CONTROL PANEL HMI SC KIT | 1 |
| 2 | 4185259 | ASSEMBLY DISPLAY SC PKG VP. | 1 |
| Note: DISPLAY ALONE / PLATINE SEULE | | | |
| 3 | 4185257 | ASSEMBLY CPU SCe Booster VP. | 1 |
| 4 | 2051219 | AUTOM.CIRCUIT BREAKER S203 B32 FOR 15kW | 1 |
| 5 | 2046288 | CIRCUIT BREAKER S201 B16 | 1 |
| 6 | 4204004 | PATCH CABLE RJ45 CAT6 1,5M GREY SC-PANEL | 1 |

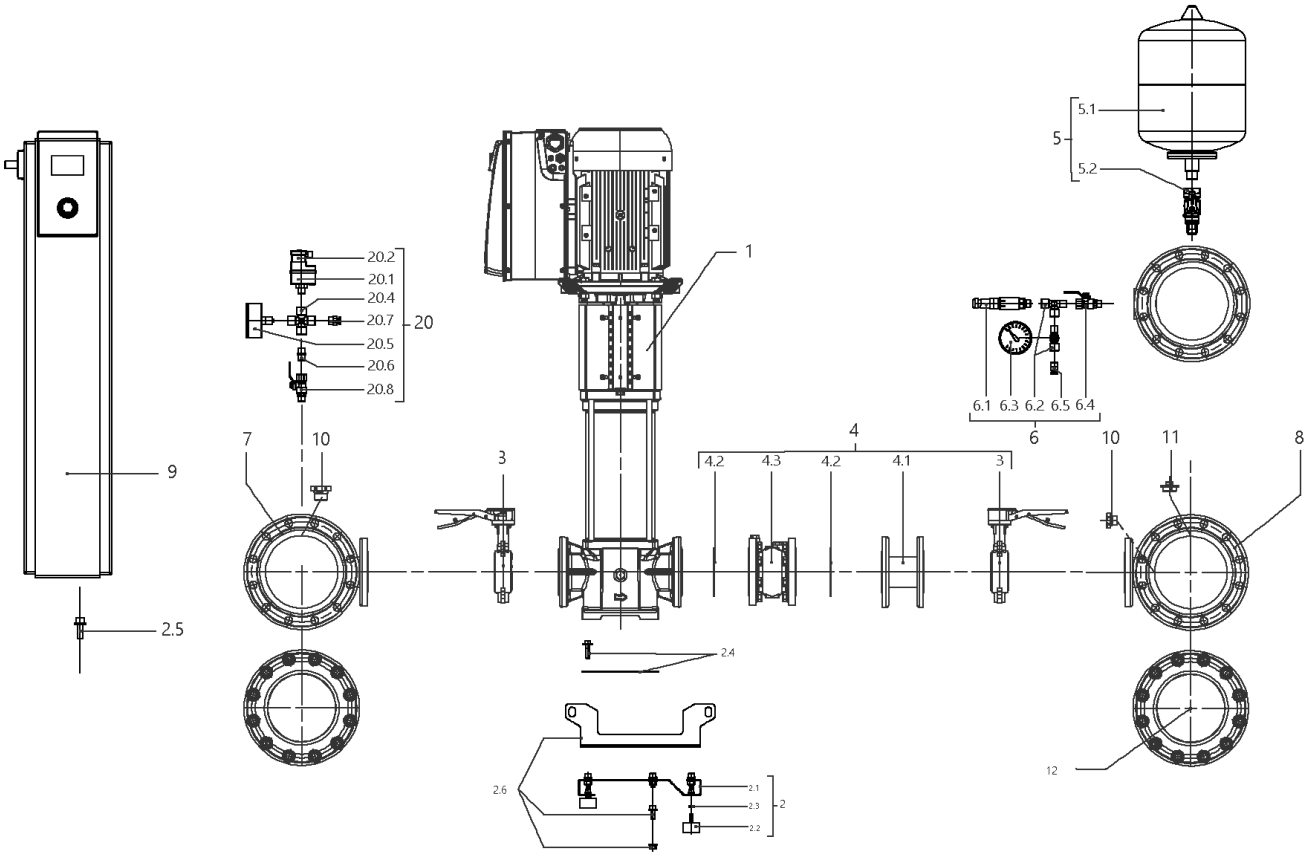
5.1
5
5.2
1
20.2
20.1
20.4
20.7
20
20.5
20.6
20.8
6.1 6.3 6.2 6.5 6.4
6
4
4.2 4.3 4.2 4.1
3
7
10
3
10
11
8
9
2.5
2.4
12
2.6
2.1
2.3
2
2.2

## SiBoost Smart 3HELIX VE5204 (2540931)

| Item | Article no. | Description | Quantity |
|---|---|---|---|
| 1 | | HELIX VE5204-4/16/E/KS/2G | 1 |
| 2 | 4204910 | BASE PLATE DE3 1750x420 M10 KIT | 1 |
| 2.1 | | > BASE_FR_3x22/36/52V_E500_L400_BOX150-250 | 1 |
| 2.2 | 2027881 | > VIBRATION DAMPER M.10X20 D.70 | 1 |
| 2.3 | 2028281 | > NUT M10 DIN936 (ISO4035) 17H VZ | 1 |
| 2.4 | 4204891 | > HOLDER PUMP Siboost Smart V36/52 KIT | 1 |
| 2.5 | 4197084 | > HOLDER SWITCHBOX WILO Smart Control KIT | 1 |
| 2.6 | 4203979 | > LIFTING Siboost HELIX 22/36 KIT | 1 |
| 3 | | BUTTERFLY VALVE 316 DN80 BLACK PS16 | 1 |
| 4 | 4204922 | DELIVERY SIDE Siboost Helix 52 KIT | 1 |
| 3 | | > BUTTERFLY VALVE 316 DN80 BLACK PS16 | 1 |
| 4.1 | | > FLANGE ADAPTER DN80x125 PN16 AISI304 | 1 |
| 4.2 | 2042897 | > GASKET DN80 PN40 DIN2690 | 1 |
| 4.3 | 4205934 | > CHECK-VALVE-FLANGES-PLUG-DN80-PN16-VP. | 1 |
| 5 | 4203983 | DIAPHREM TANK 8L/PN16 DIN4807/T5 KIT | 1 |
| 5.1 | 2045914 | > DIAPHREM TANK 8L TYP-DD 16BAR | 1 |
| 5.2 | 4189350 | > FLOW FITTING G3/4 FOR DIAPHRAG VESSEL VP | 1 |
| 6 | 4197076 | PRESSURE SENSOR/ GAUGE 0-16BAR KIT | 1 |
| 6.1 | 2085909 | > PRESS.SENSOR 1/4" 0-16BAR 4-20MA VP. | 1 |
| 6.2 | 4197077 | > T-PIECE 1/4" VP. | 1 |
| 6.3 | 2028692 | > PRESSURE GAUGE NG63-PN16-G1/4 | 1 |
| 6.4 | 2028291 | > BALL TAP R1/4" PN42 GIACOMINI R254DL | 1 |
| 6.5 | 2028691 | > BLOWGUN 1/4" MS 30BAR VP. | 1 |
| 7 | 4187227 | PIPE DE3 DN150-3xDN80+2x1/4x1500 VP. | 1 |
| 8 | 4205937 | PIPE DE3 DN150-3xDN80+2x1/4+1x3/4x1500 | 1 |
| 9 | | W-CTRL-SCE-B-3x32A-T34-FM-ND4-BAC-PKG | 1 |
| 10 | 4197079 | PLUG G1/4"x10 AISI304 KIT | 1 |
| 11 | 2032654 | PLUG R3/4" MS VIEGA 1751 | 1 |
| 12 | 4204916 | BLIND-FLANGE DN150 PN10/16-A2 KIT | 1 |
| | 2135807 | > FLAT GASKET D.169/224x2 DN150 C4430 VP. | 1 |
| | | > NUT M20 DIN934 A2 1.4301 | 1 |
| | | > Screw M20X80 ISO4014 A4 | 1 |
| | | > WASHER A21 DIN125 A2 1.4301 | 1 |
| | | > FULL FLANGE ST.DN150 PN16 EN1092-1/05 A2 | 1 |

| Item | Article no. | Description | Quantity |
|---|---|---|---|
| | | > FLANGE COVER DN150 DIN 3443 FORM A | 1 |
| 20 | | ASSEMBLY WMS. DE-EB. +VP | 1 |
| 20.1 | 2028652 | > PRESSURE SWITCH PS3-ASR 1/(1,3) VP. | 1 |
| 20.2 | 2130983 | > PLUG PS3-415 WITH KABEL 1,5M 2NO VP. | 1 |
| 20.4 | 2028290 | > CROSSPIECE R1/4" MS-NICKEL | 1 |
| 20.5 | 2028687 | > PRESSURE GAUGE NG63 R1/4" HI.0-6BAR | 1 |
| 20.6 | 2054268 | > DUAL NIPPLE G1/4" x G1/4" MS VP. | 1 |
| 20.7 | 2028691 | > BLOWGUN 1/4" MS 30BAR VP. | 1 |
| 20.8 | 2028291 | > BALL TAP R1/4" PN42 GIACOMINI R254DL | 1 |

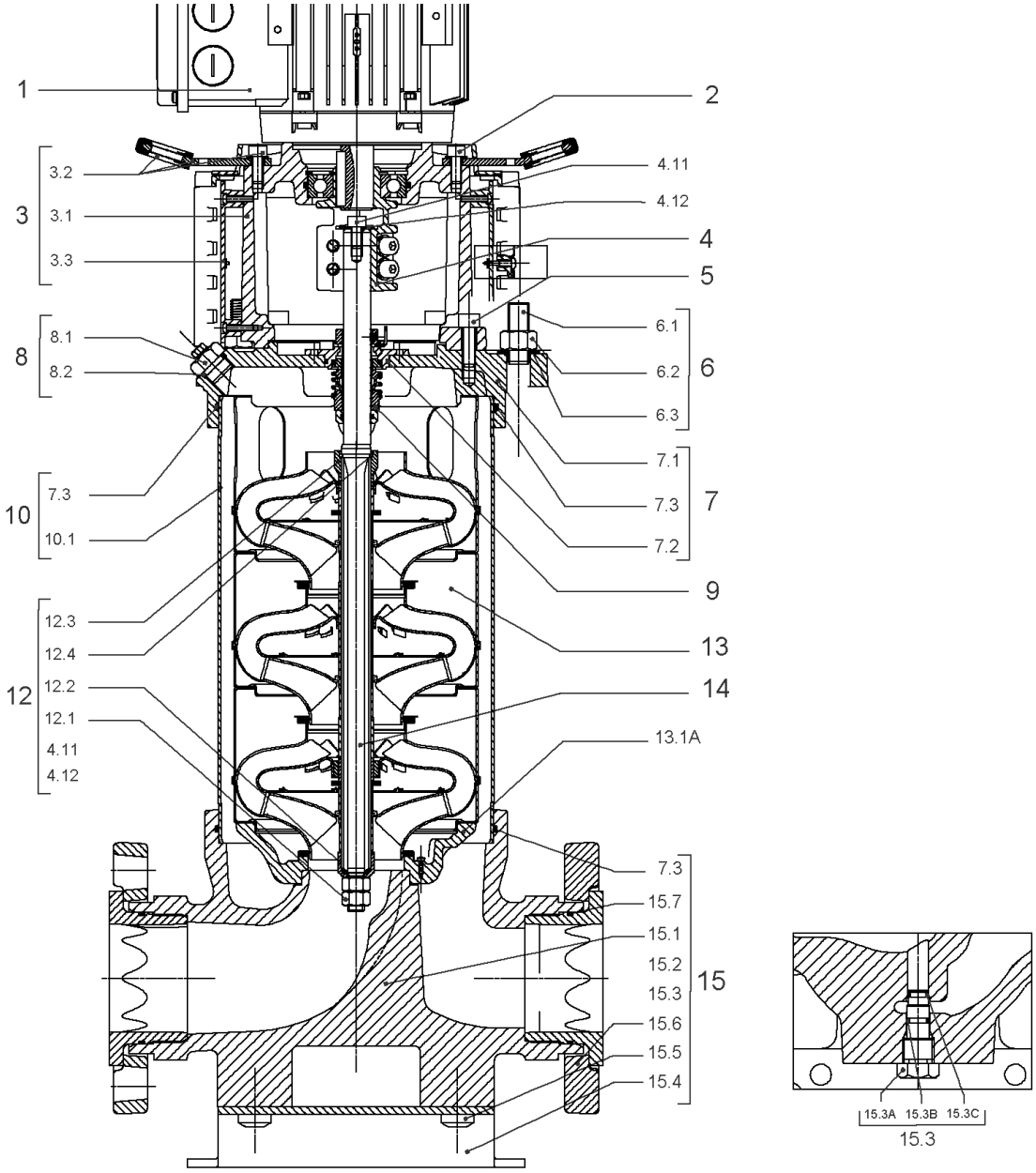
1
2
3
3.2
3.1
3.3
4.11
4.12
4
5
8
8.1
8.2
6.1
6.2
6.3
6
7.1
7.3
7.2
7
10
7.3
10.1
9
12
12.3
12.4
12.2
12.1
4.11
4.12
13
14
13.1A
7.3
15.7
15.1
15.2
15.3
15.6
15.5
15.4
15
15.3A
15.3B
15.3C
15.3

## HELIX VE5204-4/16/E/KS/2G

| Item | Article no. | Description | Quantity |
|---|---|---|---|
| 1 | | DRIVE HELIX VE5204-IE2-ARC KIT | 1 |
| Note: no longer available/nicht mehrlieferbar/n'est plus disponible | | | |
| 1 | 4218533 | DRIVE HELIX VE5204-IE4-WEG KIT | 1 |
| Note: MOTOR BRAND WEG | | | |
| 2 | 4179586 | SCREW M16X60 (4 PIECES) | 1 |
| 3 | 4157721 | LANTERN HELIX 22/36 FF300 BB6312 KIT | 1 |
| 3.1 | | > LANTERN FF300 M+ GJL MACHINED+CATA 6312 | 1 |
| 3.2 | 4179589 | > EYELET CPL.FF300 HELIX(4 PIECES) | 1 |
| 3.3 | 4143969 | > COUPLING PROTECT HELIX FF KIT | 1 |
| 4 | 4143966 | COUPLING D.20XD.38 FF300 KIT | 1 |
| 5 | 4157725 | SCREW M10X40 (4 PIECES) | 1 |
| 6 | 4179919 | STUD BOLT M16X500 KIT | 1 |
| 6.1 | | > TIE BOLT M16-500x24x44-1.4057 | 1 |
| 6.2 | 4179562 | > NUT M16 8.8 ISO4032 (4 PIECES) | 1 |
| 6.3 | 4097852 | > WASHER-CS-16.4-32-2.8-NFE25-511-A2 | 1 |
| 7 | 4179565 | END SHIELD HELIX 8'' EPDM KIT | 1 |
| 7.1 | | > END SHIELD M+ GJL MACHINED+CATA | 1 |
| 7.2 | 4179564 | > O-RING D.42.52x2.62 EPDM VP. | 1 |
| 7.3 | 4179571 | > O-RING HOUSING PIPE HELIX22/36/52 VP. | 1 |
| 8 | 4186377 | FILING/PURGING PLUG 304 HELIX KIT | 1 |
| 8.1 | | > FILLING/VENTING-PLUG-MVI8/10"-304 | 1 |
| 8.2 | 4032291 | > O-RING 17x3 EPDM KTW/WRC | 1 |
| 9 | 4143973 | CARTRIDGE HELIX22-36-52 O/E KIT | 1 |
| 10 | 4179920 | HOUSING PIPE D204 X 430 1.4301 KIT | 1 |
| 7.3 | 4179571 | > O-RING HOUSING PIPE HELIX22/36/52 VP. | 1 |
| 10.1 | | > HOUSING-PIPE Ø204-M+5204-304 | 1 |
| 11 | 4179583 | CENTRALIZER HELIX 8'' 52 VP. | 1 |
| 12 | 4164724 | SHAFT EQUIPMENT HELIX V52 KIT | 1 |
| 13 | | HYDRAULIC HELIX V 5204 | 1 |
| 14 | 4180848 | SHAFT D.22X604 1.4057 VP. | 1 |
| 15 | 4186388 | EQUIPED HOUSING HELIX FIRST DN80 DWA KIT | 1 |
| 15.1 | | > PUMP CASING MONO.GJL M+8" DN80 DWA | 1 |
| 15.2 | | > HYD.SUP.M+8" ONE PIECE HOUSING N80 DWA | 1 |
| 15.3 | 4106048 | > DRAIN/PRIMING PLUG EPDM HELIX FIRST KIT | 1 |

| Item | Article no. | Description | Quantity |
|---|---|---|---|
| 15.3A | | >> DRAIN AND PRIMING PLUG-VMI10"-304 | 1 |
| 15.3B | 4032293 | >> O-RING-10x3-EPDM-KTW/WRC | 1 |
| 15.3C | 4233957 | >> O-RING ID.9 EPDM VP. | 1 |
| 7.3 | 4179571 | > O-RING HOUSING PIPE HELIX22/36/52 VP. | 1 |
| 13.1A | 4161200 | > NECK RING 1.STAGE HELIX V36/52 KIT | 1 |
| | | >> NECK-RING-M+36/52 | 1 |
| | | >> HYDRAULIC SUPPORT CAP M+36/52 304 | 1 |
| | | >> SCREW TCL M3X8 A4 POZIDRIV | 1 |

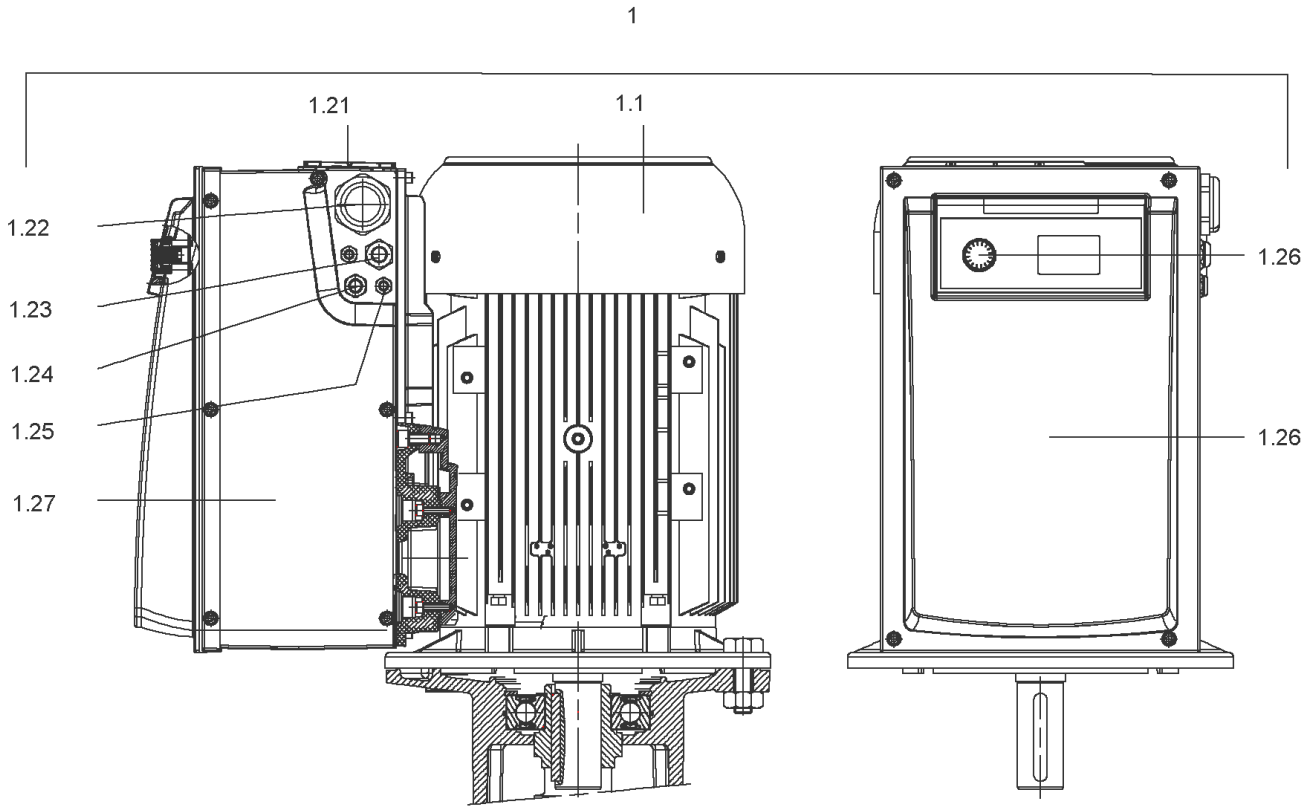
1
1.21
1.1
1.22
1.23
1.24
1.25
1.27
1.26
1.26

## DRIVE HELIX VE5204-IE2-ARC KIT

| Item | Article no. | Description | Quantity |
|---|---|---|---|
| 1.1 | | M15-2T540P55V1-160F300-N42-IE2 | 1 |
| | | SPARE PARTS MOTOR:ON REQUEST | 1 |
| 1.21 | 2132102 | FAN SMALL TL6/7 FF KIT | 1 |
| 1.25 | 2132097 | CABLE CONNECTION M12 TL6/7 FF VP. | 1 |
| 1.24 | 2132098 | CABLE CONNECTION M16 TL6/7 FF VP. | 1 |
| 1.23 | 2132099 | CABLE CONNECTION M20 TL6/7 FF VP. | 1 |
| 1.22 | 2132100 | CABLE CONNECTION SMALL M40 TL6/7 FF VP. | 1 |
| 1.27 | 2132104 | COVER SIDE TL6/7 FF CPL.VP. | 1 |
| 1.26 | 2132452 | MODULE COVER/BUTTON TL6/7 FF VP. | 1 |

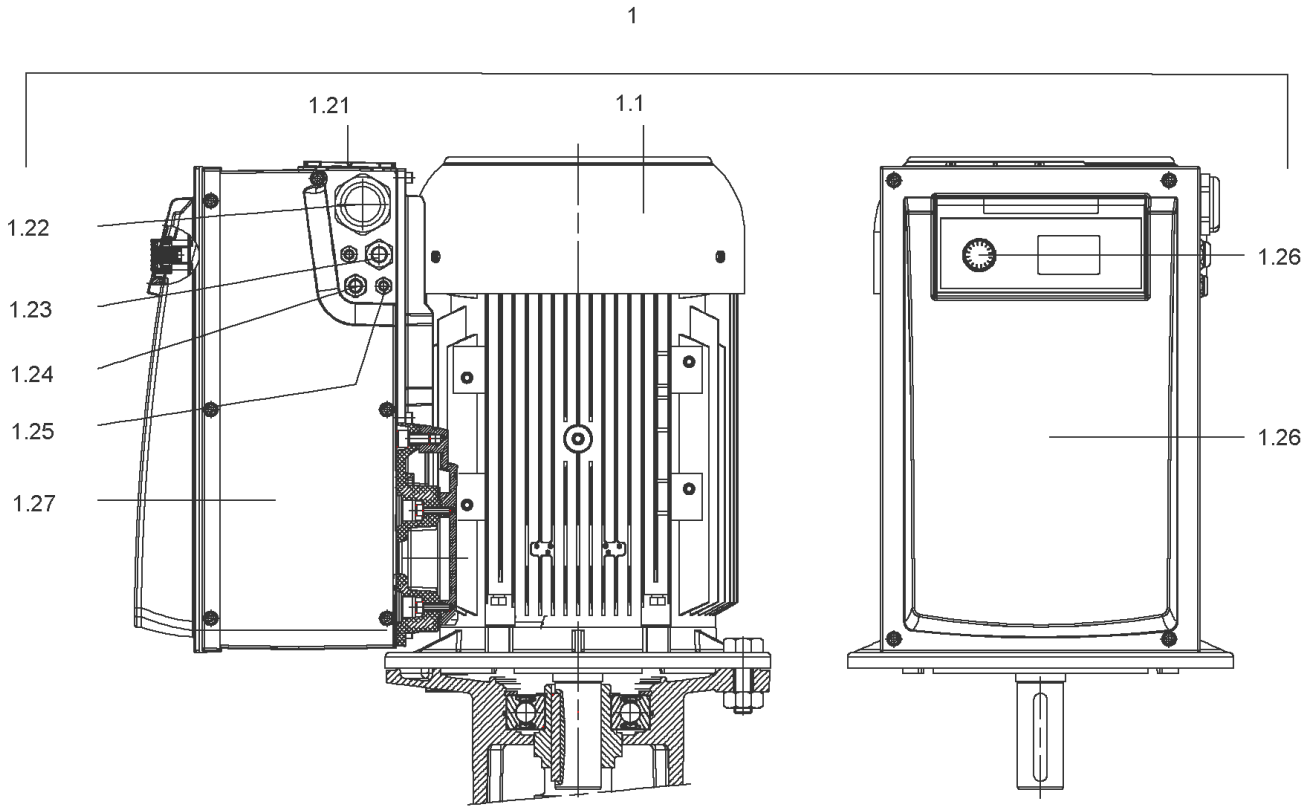
1
1.21
1.1
1.22
1.23
1.24
1.25
1.27
1.26
1.26

## DRIVE HELIX VE5204-IE4-WEG KIT (4218533)

| Item | Article no. | Description | Quantity |
|---|---|---|---|
| 1.1 | | M15-2T540P55V1-160F30-N42-ADAPT-IE4-WEG | 1 |
| | | SPARE PARTS MOTOR:ON REQUEST | 1 |
| 1.21 | 2132102 | FAN SMALL TL6/7 FF KIT | 1 |
| 1.25 | 2132097 | CABLE CONNECTION M12 TL6/7 FF VP. | 1 |
| 1.24 | 2132098 | CABLE CONNECTION M16 TL6/7 FF VP. | 1 |
| 1.23 | 2132099 | CABLE CONNECTION M20 TL6/7 FF VP. | 1 |
| 1.22 | 2132100 | CABLE CONNECTION SMALL M40 TL6/7 FF VP. | 1 |
| 1.27 | 2132104 | COVER SIDE TL6/7 FF CPL.VP. | 1 |
| 1.26 | 2132452 | MODULE COVER/BUTTON TL6/7 FF VP. | 1 |

## COUPLING D.20XD.38 FF300 KIT (4143966)

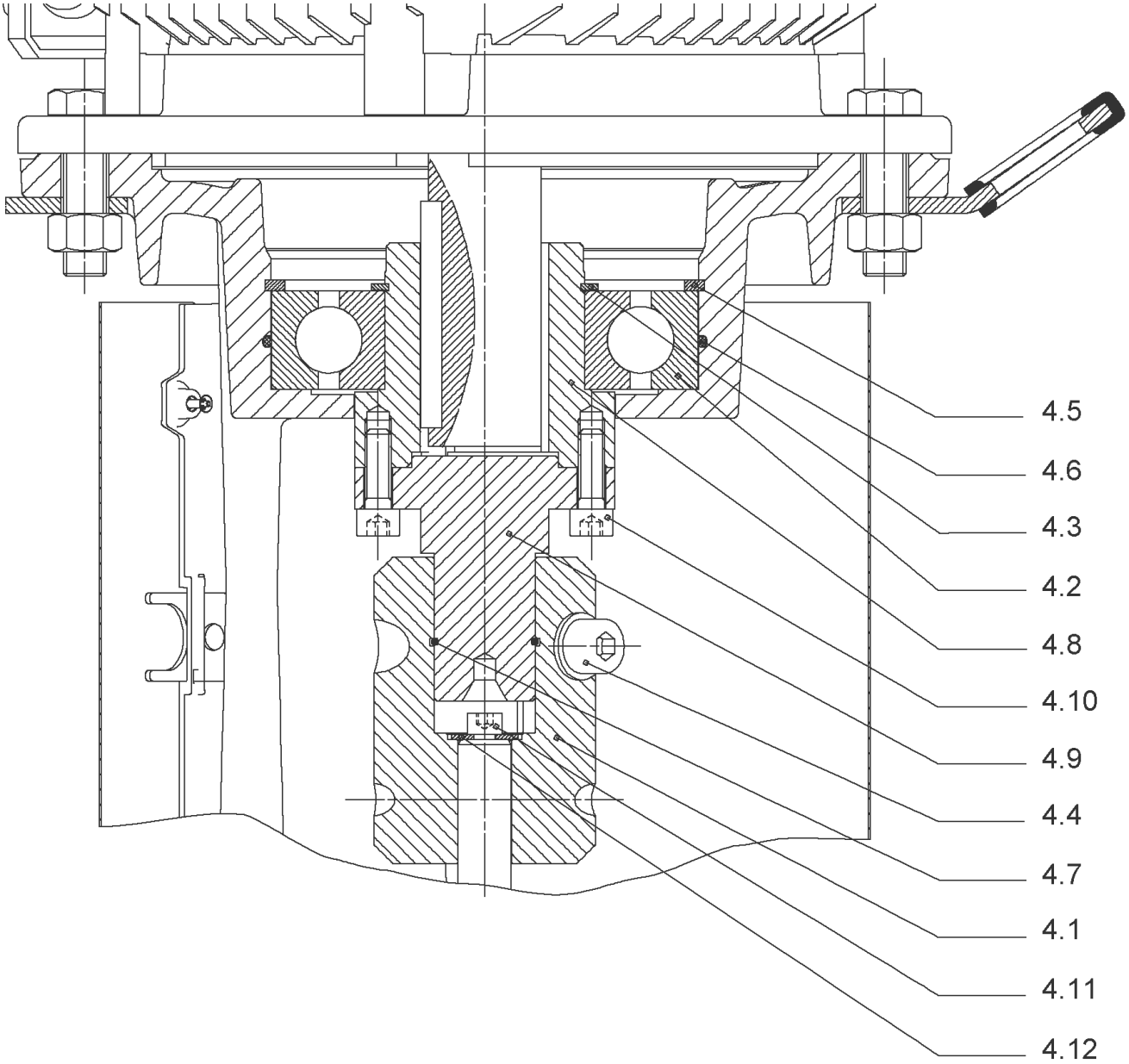

## COUPLING D.20XD.38 FF300 KIT (4143966)

| Item | Article no. | Description | Quantity |
|---|---|---|---|
| 4.1 | 4179590 | COUPLING 2 PARTS D.20XD.38XL115 VP. | 1 |
| 4.2 | 2123699 | BALL BEARING 6312/2Z-C4 (HT) VP. | 1 |
| 4.3 | 63428 | CIRCLIP-FOR-SHAFT-D60x2 | 1 |
| 4.4 | 2130991 | SCREW M12X30 ISO4762 8.8 ZN(4 PIECES) | 1 |
| 4.5 | 4032277 | CIRCLIP-HOLE-130x4 | 1 |
| 4.6 | 4006725 | O-RING ID.132,94x3,53 NBR70SR | 1 |
| 4.7 | 2130992 | RETAINING RING D.35xD.2,5 DIN7993 VP. | 1 |
| 4.8 | 4179591 | HUB D.42xD.60 VP. | 1 |
| 4.9 | 2130994 | SPACER D.38XD.55 VP. | 1 |
| 4.10 | 4094462 | SCREWS M10 ( 4 PIECES ) | 1 |
| 4.11 | 4233959 | SCREW M8x16 VP. | 1 |
| 4.12 | | SERRATED LOCK WASHER Ø8.2XØ25X35X2 | 1 |

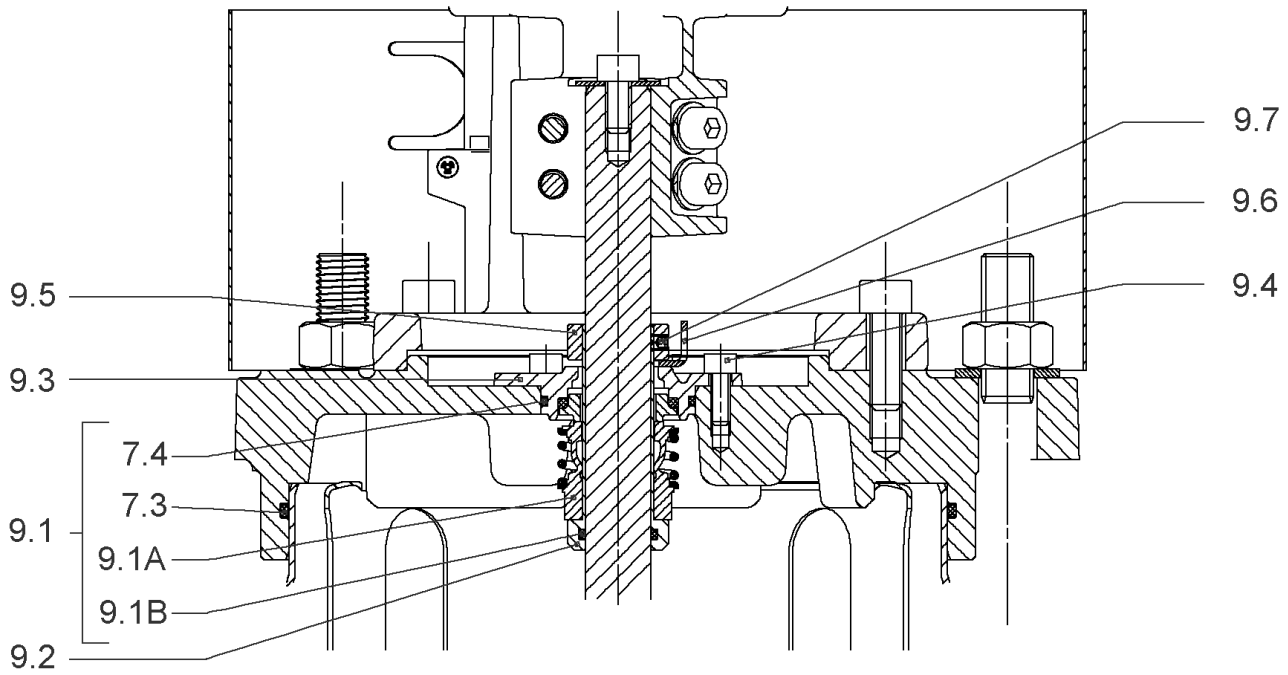
9.7
9.6
9.4
9.5
9.3
7.4
7.3
9.1
9.1A
9.1B
9.2

## CARTRIDGE HELIX22-36-52 O/E KIT (4143973)

| Item | Article no. | Description | Quantity |
|---|---|---|---|
| 9.1 | 4143974 | SEAL-KIT-HELIX22-36-52 O/E | 1 |
| 7.3 | 4179571 | > O-RING HOUSING PIPE HELIX22/36/52 VP. | 1 |
| 7.4 | 4179572 | > O-RING ID.42.52X2.62 EPDM VP. | 1 |
| 9.1A | 4179573 | > M.SEAL.HELIX22-36-52 O/E VP. | 1 |
| 9.1B | 4179574 | > O-RING ID.20x2.65 EPDM VP. | 1 |
| 9.2 | 4179566 | SHAFT SLEEVE D.20/20X60 1.4404 VP. | 1 |
| 9.3 | 4179567 | RING HOLDER Ø22 1.4301 VP. | 1 |
| 9.4 | 4176520 | SCREW CH M5x5 A4-70 ( 3PIECES ) | 1 |
| 9.5 | 4179568 | DRIVE RING D.31/22.1x11 MACH.VP. | 1 |
| 9.6 | 4179569 | TOOL M.S.CART.HELIX 8'' VP. | 1 |
| 9.7 | 4179570 | SCREW M6X16 ISO4762 8.8 GEOMET(4 PIECES) | 1 |

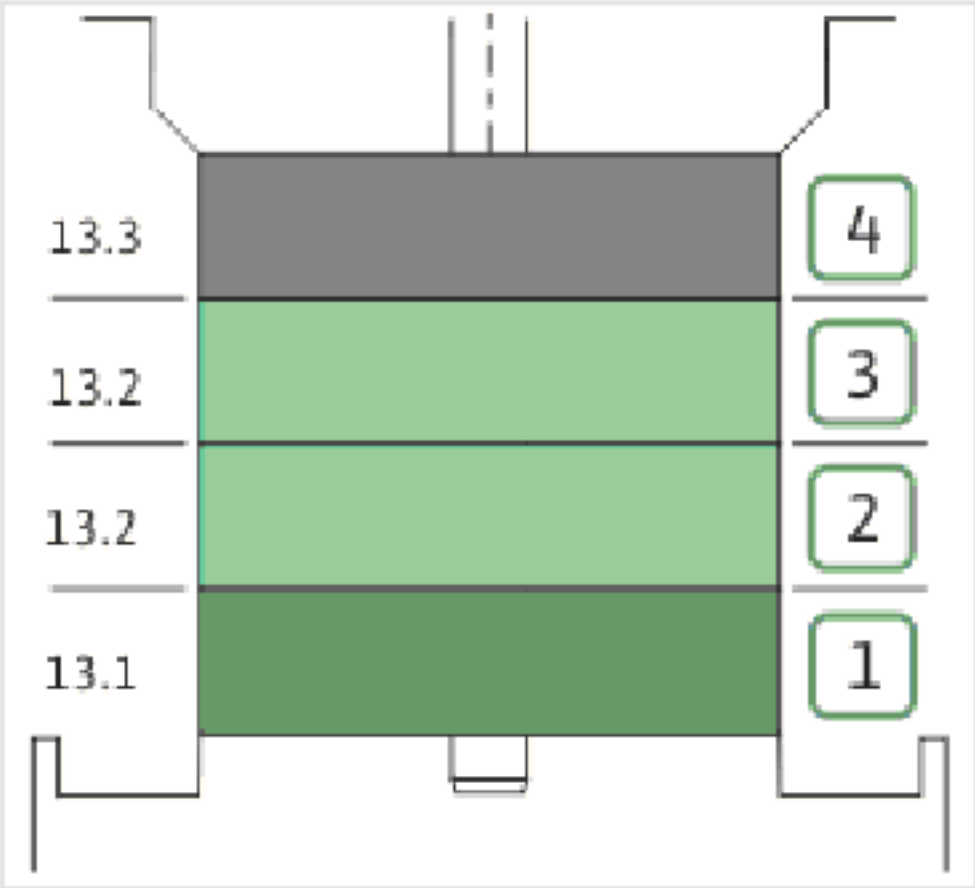
13.3
13.2
13.2
13.1
4
3
2
1

| Item | Article no. | Description | Quantity |
|---|---|---|---|
| 13.1 | 4164727 | INTERMEDIAIRE STAGE HELIX 52 1.4301 KIT | 1 |
| | | > SLEEVE-SPACER-D22XL30,42-316L | 1 |
| | | > MACH.BEARING-DIFFUSER+NR-M+52-304 | 1 |
| | | > SHAFT-SLEEVE-D26xD22x16-CW | 1 |
| | | > SPACER WASHER D22,3XD36 L3-316L | 1 |
| | | > IMPELLER-H2-M+52-304 | 1 |
| 13.1A | 4161200 | > NECK RING 1.STAGE HELIX V36/52 KIT | 1 |
| | | >> NECK-RING-M+36/52 | 1 |
| | | >> HYDRAULIC SUPPORT CAP M+36/52 304 | 1 |
| | | >> SCREW TCL M3X8 A4 POZIDRIV | 1 |
| 13.2 | 4164728 | INTERMEDIATE STAGE HELIX 52 1.4301 KIT | 1 |
| | | > MACH.STD-DIFFUSER+NR-M+52-304 | 1 |
| | | > IMPELLER-H5-M+52-304 | 1 |
| 13.3 | 4164729 | UPPER-STAGE HELIX 52 1.4301 KIT | 1 |
| | | > STOP COLLAR OF IMPELLER L27,6-Ø22-316L | 1 |
| | | > SLEEVE-SPACER-D22XL16,66-316L | 1 |
| | | > SPACER WASHER D22,3XD36 L3-316L | 1 |
| | | > IMPELLER-H2-M+52-304 | 1 |
| | | > MACH.STD-DISCHARGE-CHAMBER-M+52-304 | 1 |

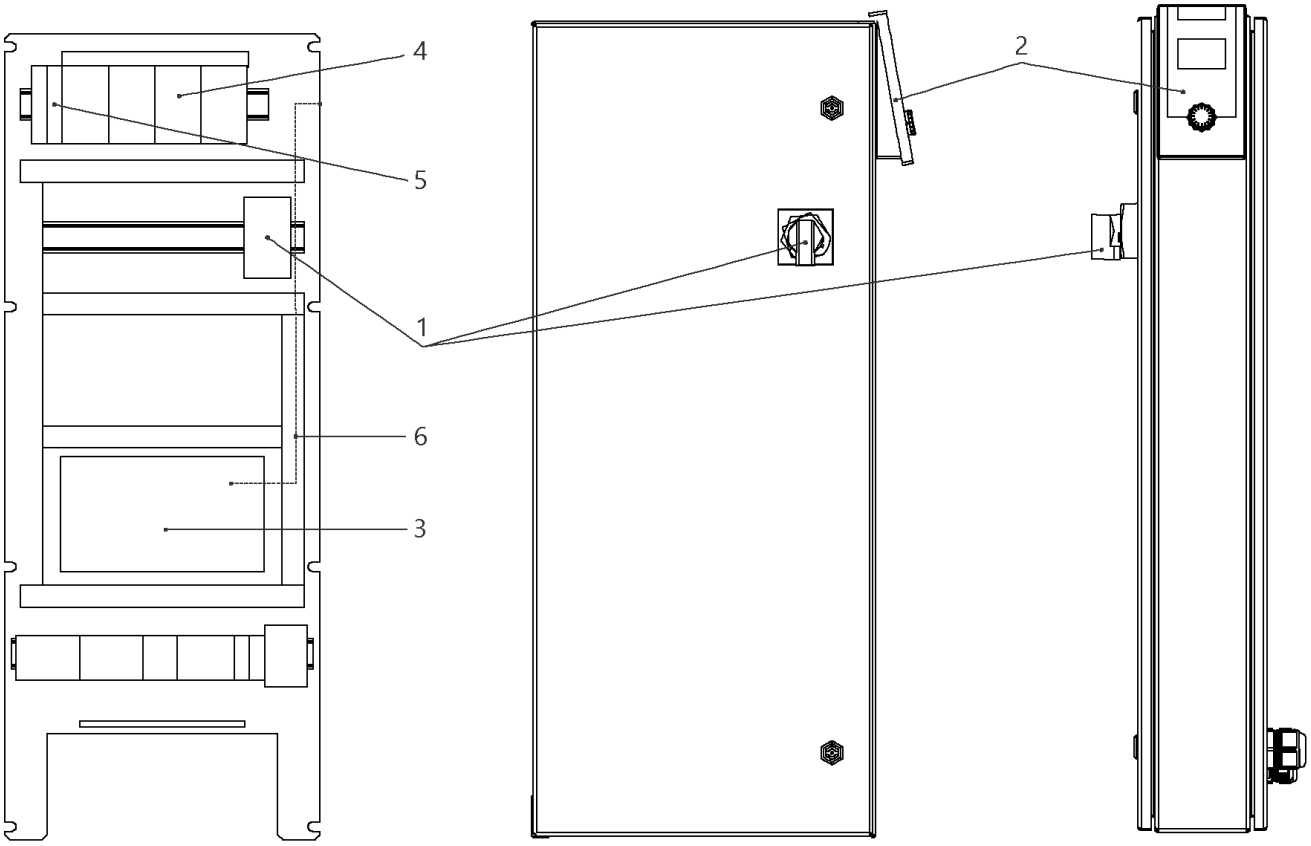
4
5
1
6
3
2

## W-CTRL-SCE-B-3x32A-T34-FM-ND4-BAC-PKG

| Item | Article no. | Description | Quantity |
|---|---|---|---|
| 1 | 2104468 | MAIN SWITCH OT125F3 L250 KIT | 1 |
| 2 | 4184784 | CONTROL PANEL HMI SC KIT | 1 |
| 2 | 4185259 | ASSEMBLY DISPLAY SC PKG VP. | 1 |
| Note: DISPLAY ALONE / PLATINE SEULE | | | |
| 3 | 4185257 | ASSEMBLY CPU SCe Booster VP. | 1 |
| 4 | 2051220 | AUTOM.CIRCUIT BREAKER S203 B40 FOR18,5kW | 1 |
| 5 | 2046288 | CIRCUIT BREAKER S201 B16 | 1 |
| 6 | 4204004 | PATCH CABLE RJ45 CAT6 1,5M GREY SC-PANEL | 1 |

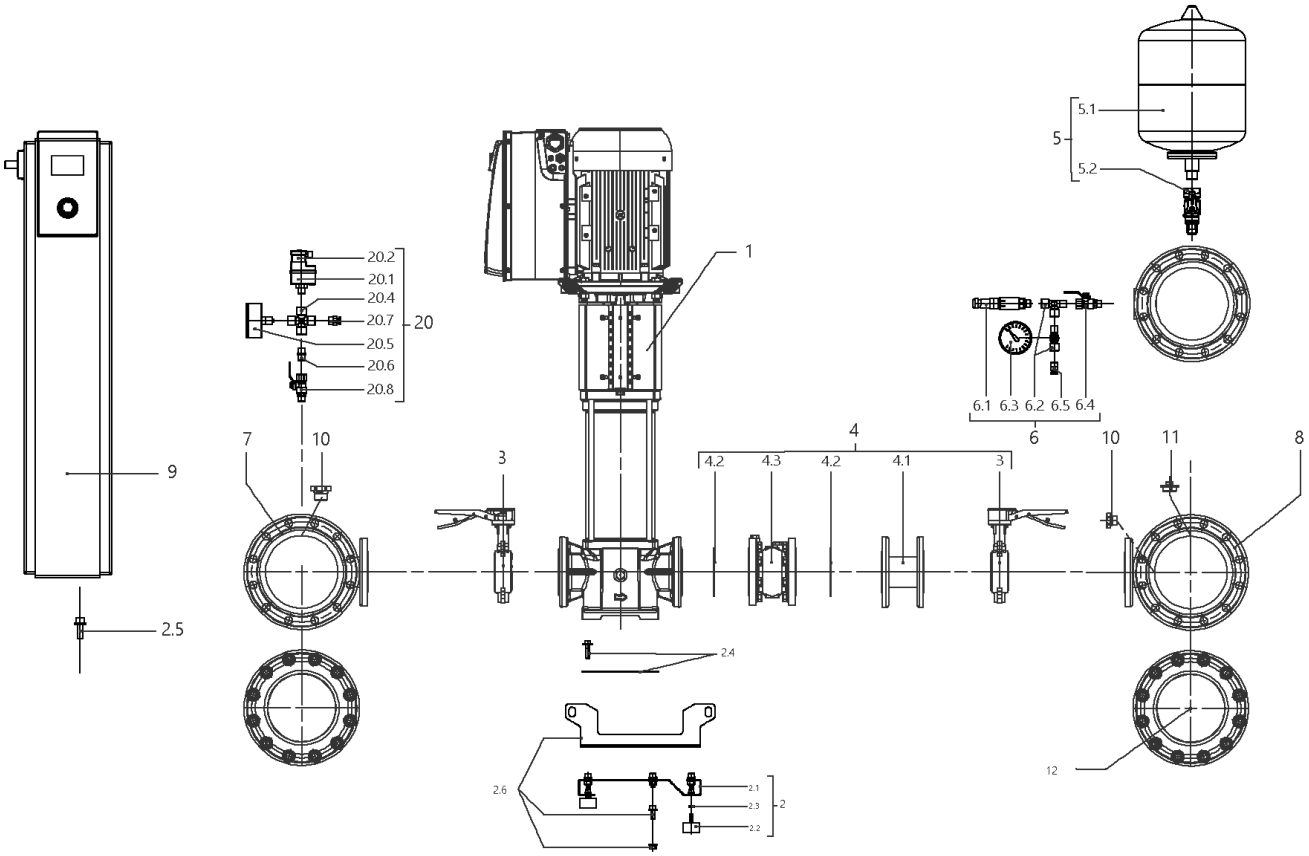
5.1
5
5.2
1
20.2
20.1
20.4
20.7
20
20.5
20.6
20.8
6.1 6.3 6.2 6.5 6.4
6
4
4.2 4.3 4.2 4.1
3
7
10
3
10
11
8
9
2.5
2.4
12
2.6
2.1
2.3
2
2.2

## SiBoost Smart 3HELIX VE5205 (2540932)

| Item | Article no. | Description | Quantity |
|---|---|---|---|
| 1 | | HELIX VE5205-4/16/E/KS/2G | 1 |
| 2 | 4204910 | BASE PLATE DE3 1750x420 M10 KIT | 1 |
| 2.1 | | > BASE_FR_3x22/36/52V_E500_L400_BOX150-250 | 1 |
| 2.2 | 2027881 | > VIBRATION DAMPER M.10X20 D.70 | 1 |
| 2.3 | 2028281 | > NUT M10 DIN936 (ISO4035) 17H VZ | 1 |
| 2.4 | 4204891 | > HOLDER PUMP Siboost Smart V36/52 KIT | 1 |
| 2.5 | 4197084 | > HOLDER SWITCHBOX WILO Smart Control KIT | 1 |
| 2.6 | 4203979 | > LIFTING Siboost HELIX 22/36 KIT | 1 |
| 3 | | BUTTERFLY VALVE 316 DN80 BLACK PS16 | 1 |
| 4 | 4204922 | DELIVERY SIDE Siboost Helix 52 KIT | 1 |
| 3 | | > BUTTERFLY VALVE 316 DN80 BLACK PS16 | 1 |
| 4.1 | | > FLANGE ADAPTER DN80x125 PN16 AISI304 | 1 |
| 4.2 | 2042897 | > GASKET DN80 PN40 DIN2690 | 1 |
| 4.3 | 4205934 | > CHECK-VALVE-FLANGES-PLUG-DN80-PN16-VP. | 1 |
| 5 | 4203983 | DIAPHREM TANK 8L/PN16 DIN4807/T5 KIT | 1 |
| 5.1 | 2045914 | > DIAPHREM TANK 8L TYP-DD 16BAR | 1 |
| 5.2 | 4189350 | > FLOW FITTING G3/4 FOR DIAPHRAG VESSEL VP | 1 |
| 6 | 4197076 | PRESSURE SENSOR/ GAUGE 0-16BAR KIT | 1 |
| 6.1 | 2085909 | > PRESS.SENSOR 1/4" 0-16BAR 4-20MA VP. | 1 |
| 6.2 | 4197077 | > T-PIECE 1/4" VP. | 1 |
| 6.3 | 2028692 | > PRESSURE GAUGE NG63-PN16-G1/4 | 1 |
| 6.4 | 2028291 | > BALL TAP R1/4" PN42 GIACOMINI R254DL | 1 |
| 6.5 | 2028691 | > BLOWGUN 1/4" MS 30BAR VP. | 1 |
| 7 | 4187227 | PIPE DE3 DN150-3xDN80+2x1/4x1500 VP. | 1 |
| 8 | 4205937 | PIPE DE3 DN150-3xDN80+2x1/4+1x3/4x1500 | 1 |
| 9 | | W-CTRL-SCE-B-3x37,5A-T34-FM-ND4-AVC-PKG | 1 |
| 10 | 4197079 | PLUG G1/4"x10 AISI304 KIT | 1 |
| 11 | 2032654 | PLUG R3/4" MS VIEGA 1751 | 1 |
| 12 | 4204916 | BLIND-FLANGE DN150 PN10/16-A2 KIT | 1 |
| | 2135807 | > FLAT GASKET D.169/224x2 DN150 C4430 VP. | 1 |
| | | > NUT M20 DIN934 A2 1.4301 | 1 |
| | | > Screw M20X80 ISO4014 A4 | 1 |
| | | > WASHER A21 DIN125 A2 1.4301 | 1 |
| | | > FULL FLANGE ST.DN150 PN16 EN1092-1/05 A2 | 1 |

| Item | Article no. | Description | Quantity |
|---|---|---|---|
| | | > FLANGE COVER DN150 DIN 3443 FORM A | 1 |
| 20 | | ASSEMBLY WMS. DE-EB. +VP | 1 |
| 20.1 | 2028652 | > PRESSURE SWITCH PS3-ASR 1/(1,3) VP. | 1 |
| 20.2 | 2130983 | > PLUG PS3-415 WITH KABEL 1,5M 2NO VP. | 1 |
| 20.4 | 2028290 | > CROSSPIECE R1/4" MS-NICKEL | 1 |
| 20.5 | 2028687 | > PRESSURE GAUGE NG63 R1/4" HI.0-6BAR | 1 |
| 20.6 | 2054268 | > DUAL NIPPLE G1/4" x G1/4" MS VP. | 1 |
| 20.7 | 2028691 | > BLOWGUN 1/4" MS 30BAR VP. | 1 |
| 20.8 | 2028291 | > BALL TAP R1/4" PN42 GIACOMINI R254DL | 1 |

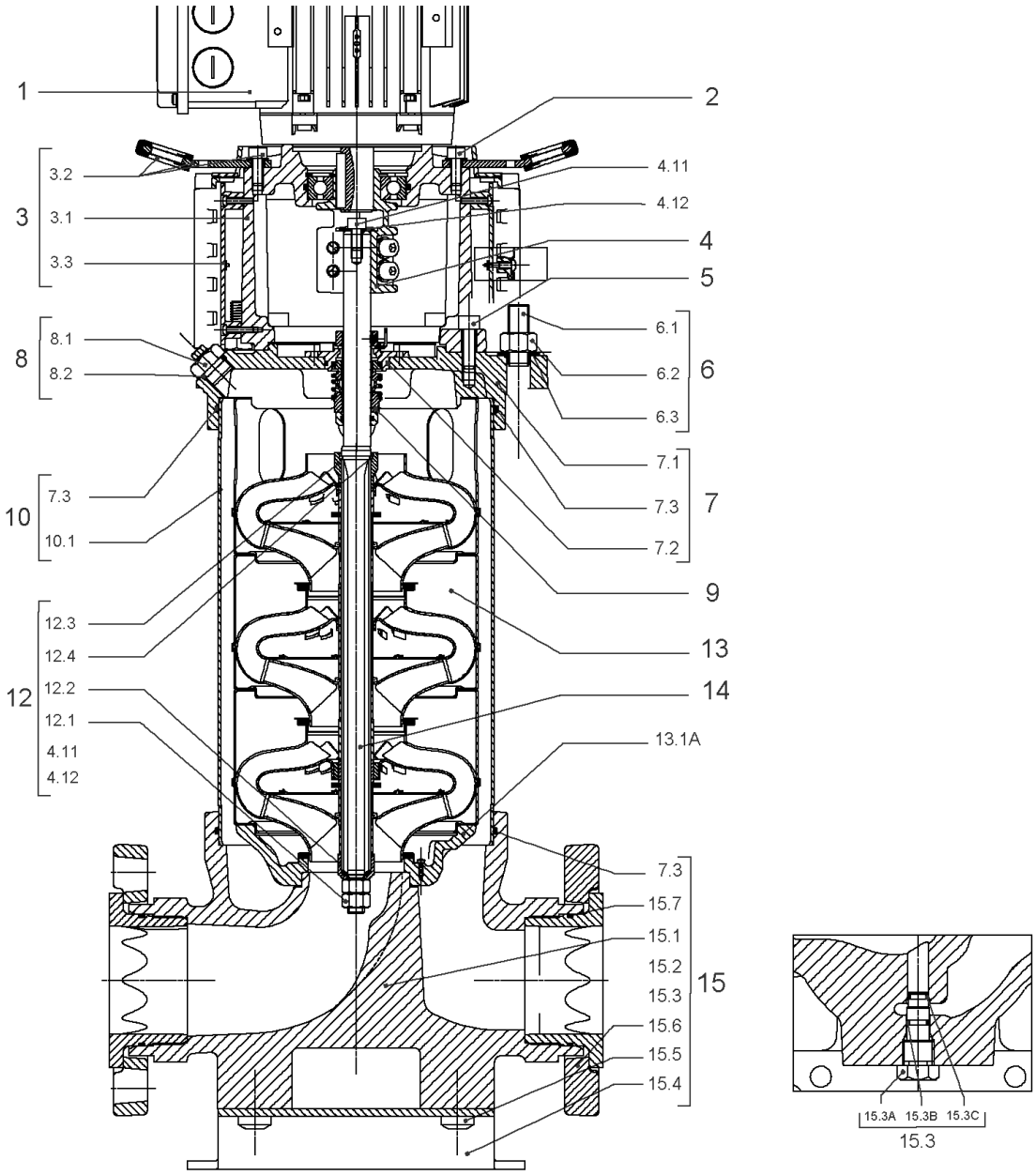
1
2
3
3.2
3.1
3.3
4.11
4.12
4
5
8
8.1
8.2
6.1
6.2
6.3
6
7.1
7.3
7.2
7
10
7.3
10.1
9
12.3
12.4
12.2
12.1
4.11
4.12
12
13
14
13.1A
7.3
15.7
15.1
15.2
15.3
15.6
15.5
15.4
15
15.3A
15.3B
15.3C
15.3

## HELIX VE5205-4/16/E/KS/2G

| Item | Article no. | Description | Quantity |
|---|---|---|---|
| 1 | | DRIVE HELIX VE5205-IE2-ARC KIT | 1 |
| Note: no longer available/nicht mehrlieferbar/n'est plus disponible | | | |
| 1 | 4213695 | DRIVE HELIX VE5205-IE4-WEG KIT | 1 |
| Note: MOTOR BRAND WEG | | | |
| 2 | 4179586 | SCREW M16X60 (4 PIECES) | 1 |
| 3 | 4157721 | LANTERN HELIX 22/36 FF300 BB6312 KIT | 1 |
| 3.1 | | > LANTERN FF300 M+ GJL MACHINED+CATA 6312 | 1 |
| 3.2 | 4179589 | > EYELET CPL.FF300 HELIX(4 PIECES) | 1 |
| 3.3 | 4143969 | > COUPLING PROTECT HELIX FF KIT | 1 |
| 4 | 4143966 | COUPLING D.20XD.38 FF300 KIT | 1 |
| 5 | 4157725 | SCREW M10X40 (4 PIECES) | 1 |
| 6 | 4179923 | STUD BOLT M16X600 KIT | 1 |
| 6.1 | | > TIE BOLT M16-600x24x44-1.4057 | 1 |
| 6.2 | 4179562 | > NUT M16 8.8 ISO4032 (4 PIECES) | 1 |
| 6.3 | 4097852 | > WASHER-CS-16.4-32-2.8-NFE25-511-A2 | 1 |
| 7 | 4179565 | END SHIELD HELIX 8'' EPDM KIT | 1 |
| 7.1 | | > END SHIELD M+ GJL MACHINED+CATA | 1 |
| 7.2 | 4179564 | > O-RING D.42.52x2.62 EPDM VP. | 1 |
| 7.3 | 4179571 | > O-RING HOUSING PIPE HELIX22/36/52 VP. | 1 |
| 8 | 4186377 | FILING/PURGING PLUG 304 HELIX KIT | 1 |
| 8.1 | | > FILLING/VENTING-PLUG-MVI8/10"-304 | 1 |
| 8.2 | 4032291 | > O-RING 17x3 EPDM KTW/WRC | 1 |
| 9 | 4143973 | CARTRIDGE HELIX22-36-52 O/E KIT | 1 |
| 10 | 4179924 | HOUSING PIPE D.204X530 1.4301 KIT | 1 |
| 7.3 | 4179571 | > O-RING HOUSING PIPE HELIX22/36/52 VP. | 1 |
| 10.1 | | > HOUSING-PIPE Ø204-M+3607/5205-304 | 1 |
| 11 | 4179583 | CENTRALIZER HELIX 8'' 52 VP. | 1 |
| 12 | 4164724 | SHAFT EQUIPMENT HELIX V52 KIT | 1 |
| 13 | | HYDRAULIC HELIX V 5205 | 1 |
| 14 | 4179926 | SHAFTS D.22X704 1.4057 VP. | 1 |
| 15 | 4186388 | EQUIPED HOUSING HELIX FIRST DN80 DWA KIT | 1 |
| 15.1 | | > PUMP CASING MONO.GJL M+8" DN80 DWA | 1 |
| 15.2 | | > HYD.SUP.M+8" ONE PIECE HOUSING N80 DWA | 1 |
| 15.3 | 4106048 | > DRAIN/PRIMING PLUG EPDM HELIX FIRST KIT | 1 |

| Item | Article no. | Description | Quantity |
|---|---|---|---|
| 15.3A | | >> DRAIN AND PRIMING PLUG-VMI10"-304 | 1 |
| 15.3B | 4032293 | >> O-RING-10x3-EPDM-KTW/WRC | 1 |
| 15.3C | 4233957 | >> O-RING ID.9 EPDM VP. | 1 |
| 7.3 | 4179571 | > O-RING HOUSING PIPE HELIX22/36/52 VP. | 1 |
| 13.1A | 4161200 | > NECK RING 1.STAGE HELIX V36/52 KIT | 1 |
| | | >> NECK-RING-M+36/52 | 1 |
| | | >> HYDRAULIC SUPPORT CAP M+36/52 304 | 1 |
| | | >> SCREW TCL M3X8 A4 POZIDRIV | 1 |

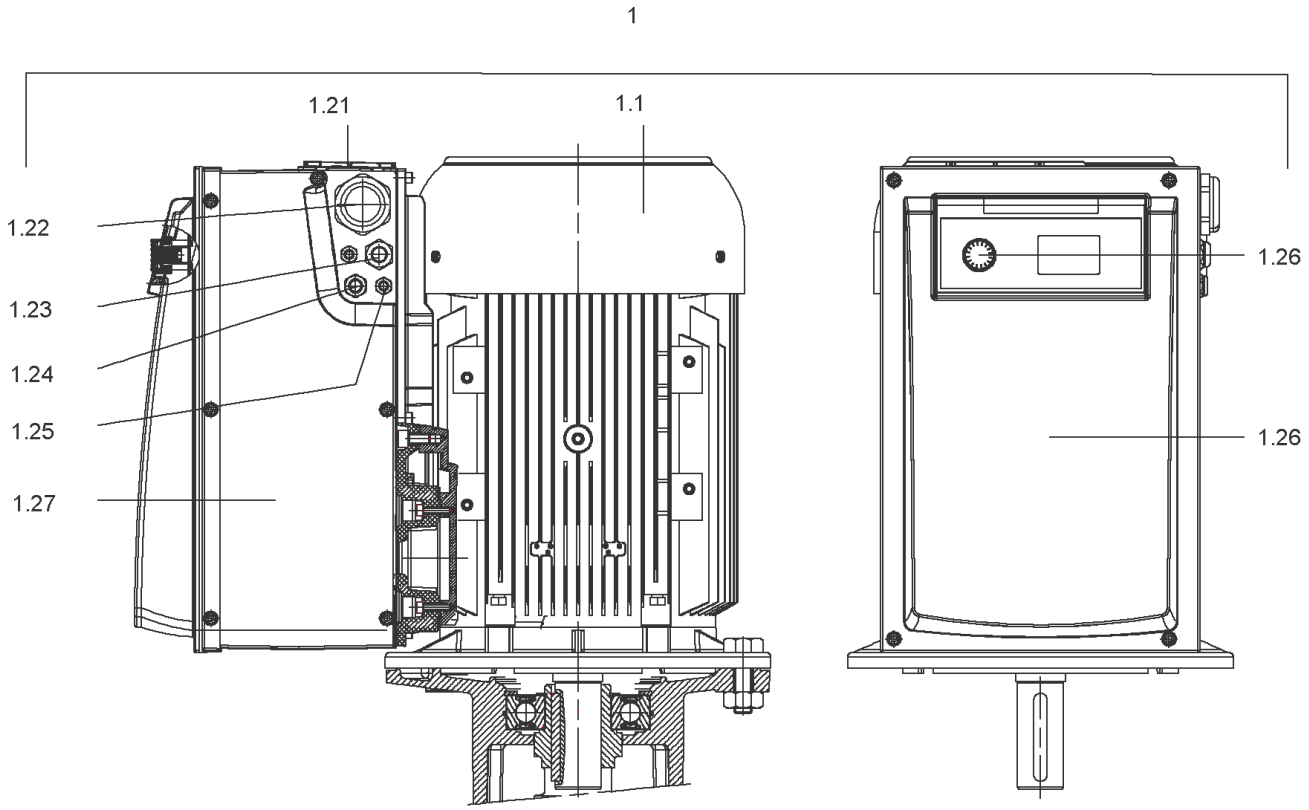
1
1.21
1.1
1.22
1.23
1.24
1.25
1.27
1.26
1.26

## DRIVE HELIX VE5205-IE2-ARC KIT

| Item | Article no. | Description | Quantity |
|---|---|---|---|
| 1.1 | | M18.5-2T540P55V1-160F300-N42-IE2 | 1 |
| | | SPARE PARTS MOTOR:ON REQUEST | 1 |
| 1.21 | 2132103 | FAN LARGE TL6/7 FF KIT | 1 |
| 1.25 | 2132097 | CABLE CONNECTION M12 TL6/7 FF VP. | 1 |
| 1.24 | 2132098 | CABLE CONNECTION M16 TL6/7 FF VP. | 1 |
| 1.23 | 2132099 | CABLE CONNECTION M20 TL6/7 FF VP. | 1 |
| 1.22 | 2132101 | CABLE CONNECTION LARGE M40 TL6/7 FF VP. | 1 |
| 1.27 | 2132104 | COVER SIDE TL6/7 FF CPL.VP. | 1 |
| 1.26 | 2132452 | MODULE COVER/BUTTON TL6/7 FF VP. | 1 |

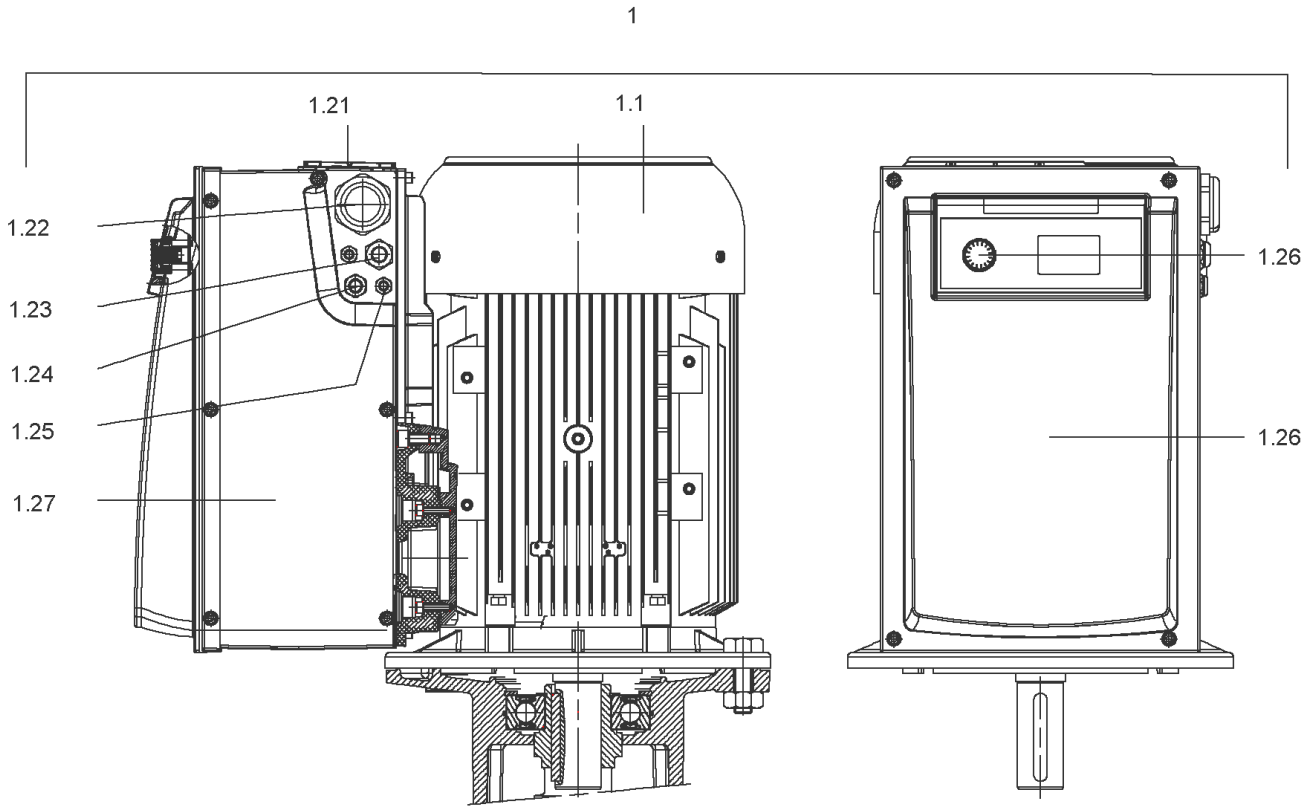
1
1.21
1.1
1.22
1.23
1.24
1.25
1.27
1.26
1.26

## DRIVE HELIX VE5205-IE4-WEG KIT (4213695)

| Item | Article no. | Description | Quantity |
|---|---|---|---|
| 1.1 | | M18,5-2T540P55V1-180F30-N42-ADAP-IE4-WEG | 1 |
| | | SPARE PARTS MOTOR:ON REQUEST | 1 |
| 1.21 | 2132102 | FAN SMALL TL6/7 FF KIT | 1 |
| 1.25 | 2132097 | CABLE CONNECTION M12 TL6/7 FF VP. | 1 |
| 1.24 | 2132098 | CABLE CONNECTION M16 TL6/7 FF VP. | 1 |
| 1.23 | 2132099 | CABLE CONNECTION M20 TL6/7 FF VP. | 1 |
| 1.22 | 2132100 | CABLE CONNECTION SMALL M40 TL6/7 FF VP. | 1 |
| 1.27 | 2132104 | COVER SIDE TL6/7 FF CPL.VP. | 1 |
| 1.26 | 2132452 | MODULE COVER/BUTTON TL6/7 FF VP. | 1 |

## COUPLING D.20XD.38 FF300 KIT (4143966)

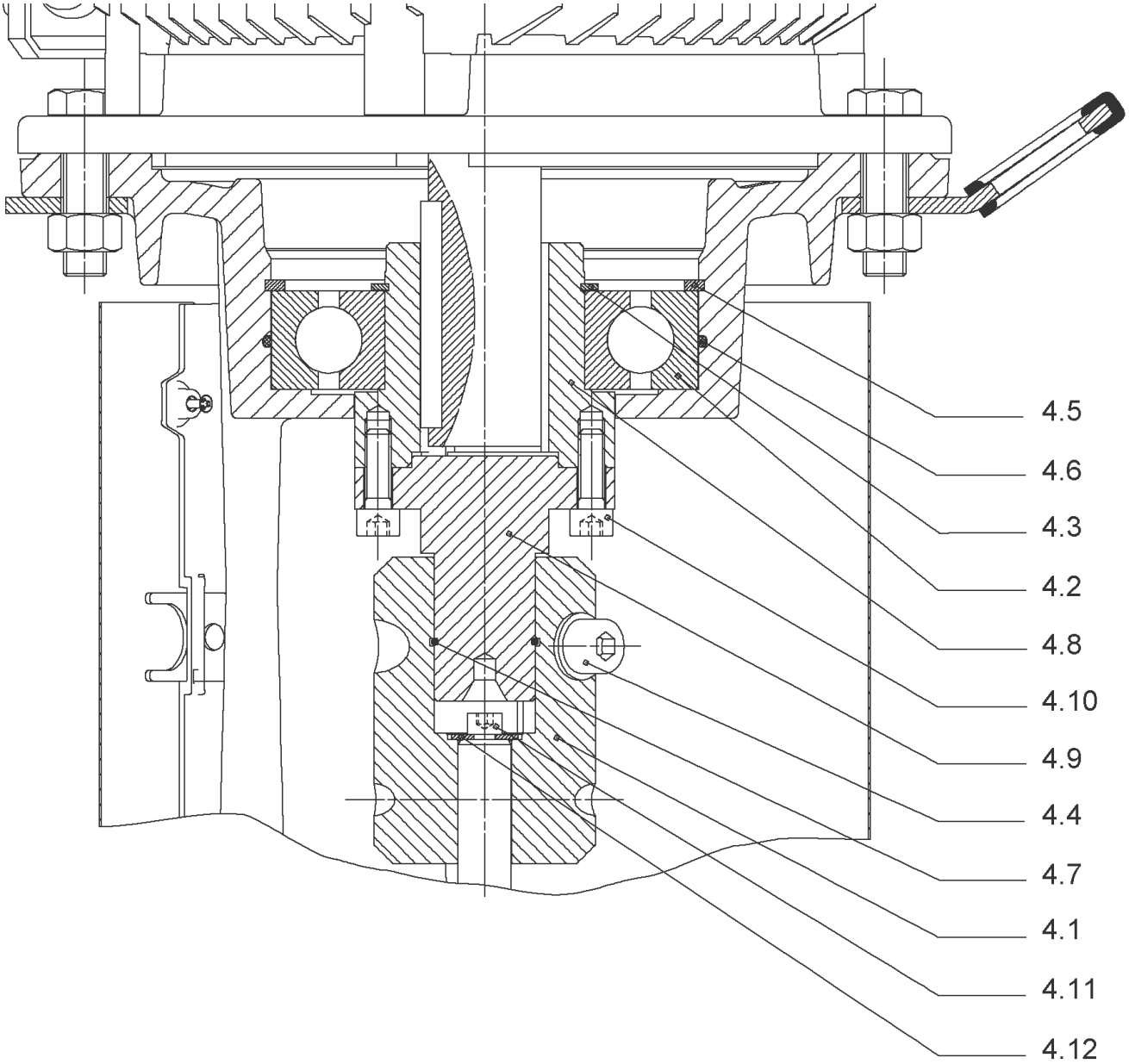

## COUPLING D.20XD.38 FF300 KIT (4143966)

| Item | Article no. | Description | Quantity |
|---|---|---|---|
| 4.1 | 4179590 | COUPLING 2 PARTS D.20XD.38XL115 VP. | 1 |
| 4.2 | 2123699 | BALL BEARING 6312/2Z-C4 (HT) VP. | 1 |
| 4.3 | 63428 | CIRCLIP-FOR-SHAFT-D60x2 | 1 |
| 4.4 | 2130991 | SCREW M12X30 ISO4762 8.8 ZN(4 PIECES) | 1 |
| 4.5 | 4032277 | CIRCLIP-HOLE-130x4 | 1 |
| 4.6 | 4006725 | O-RING ID.132,94x3,53 NBR70SR | 1 |
| 4.7 | 2130992 | RETAINING RING D.35xD.2,5 DIN7993 VP. | 1 |
| 4.8 | 4179591 | HUB D.42xD.60 VP. | 1 |
| 4.9 | 2130994 | SPACER D.38XD.55 VP. | 1 |
| 4.10 | 4094462 | SCREWS M10 ( 4 PIECES ) | 1 |
| 4.11 | 4233959 | SCREW M8x16 VP. | 1 |
| 4.12 | | SERRATED LOCK WASHER Ø8.2XØ25X35X2 | 1 |

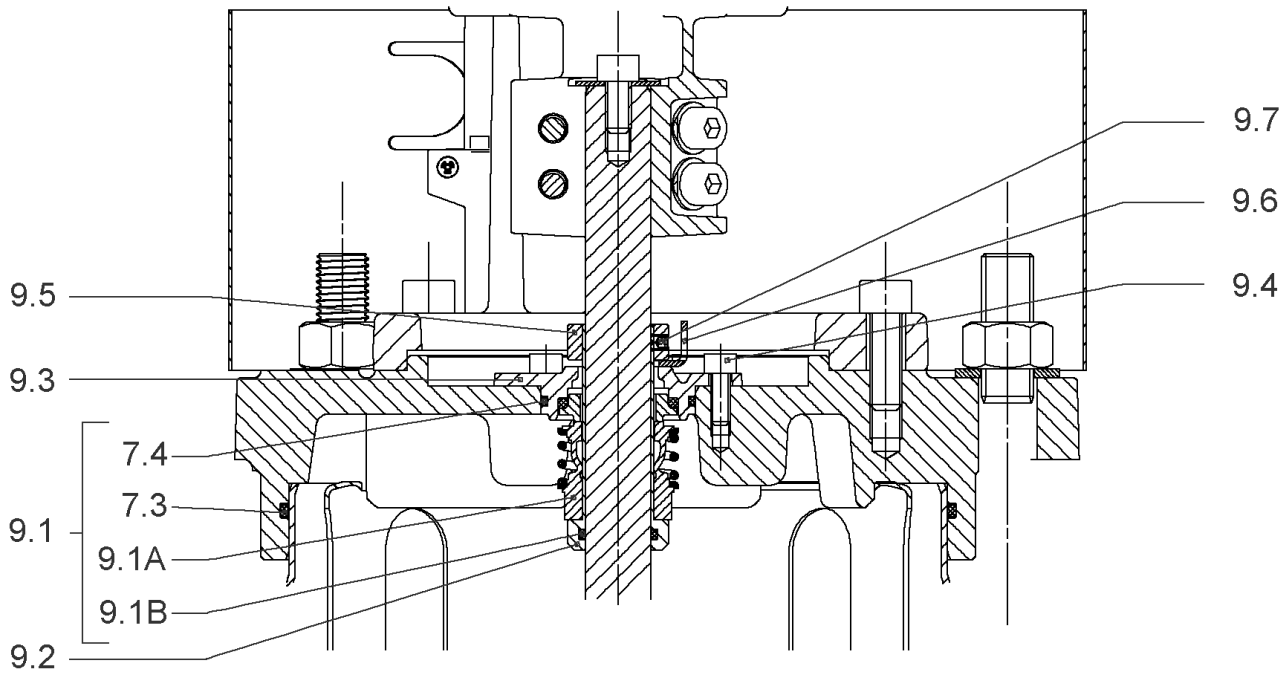
9.7
9.6
9.4
9.5
9.3
7.4
7.3
9.1
9.1A
9.1B
9.2

## CARTRIDGE HELIX22-36-52 O/E KIT (4143973)

| Item | Article no. | Description | Quantity |
|---|---|---|---|
| 9.1 | 4143974 | SEAL-KIT-HELIX22-36-52 O/E | 1 |
| 7.3 | 4179571 | > O-RING HOUSING PIPE HELIX22/36/52 VP. | 1 |
| 7.4 | 4179572 | > O-RING ID.42.52X2.62 EPDM VP. | 1 |
| 9.1A | 4179573 | > M.SEAL.HELIX22-36-52 O/E VP. | 1 |
| 9.1B | 4179574 | > O-RING ID.20x2.65 EPDM VP. | 1 |
| 9.2 | 4179566 | SHAFT SLEEVE D.20/20X60 1.4404 VP. | 1 |
| 9.3 | 4179567 | RING HOLDER Ø22 1.4301 VP. | 1 |
| 9.4 | 4176520 | SCREW CH M5x5 A4-70 ( 3PIECES ) | 1 |
| 9.5 | 4179568 | DRIVE RING D.31/22.1x11 MACH.VP. | 1 |
| 9.6 | 4179569 | TOOL M.S.CART.HELIX 8'' VP. | 1 |
| 9.7 | 4179570 | SCREW M6X16 ISO4762 8.8 GEOMET(4 PIECES) | 1 |

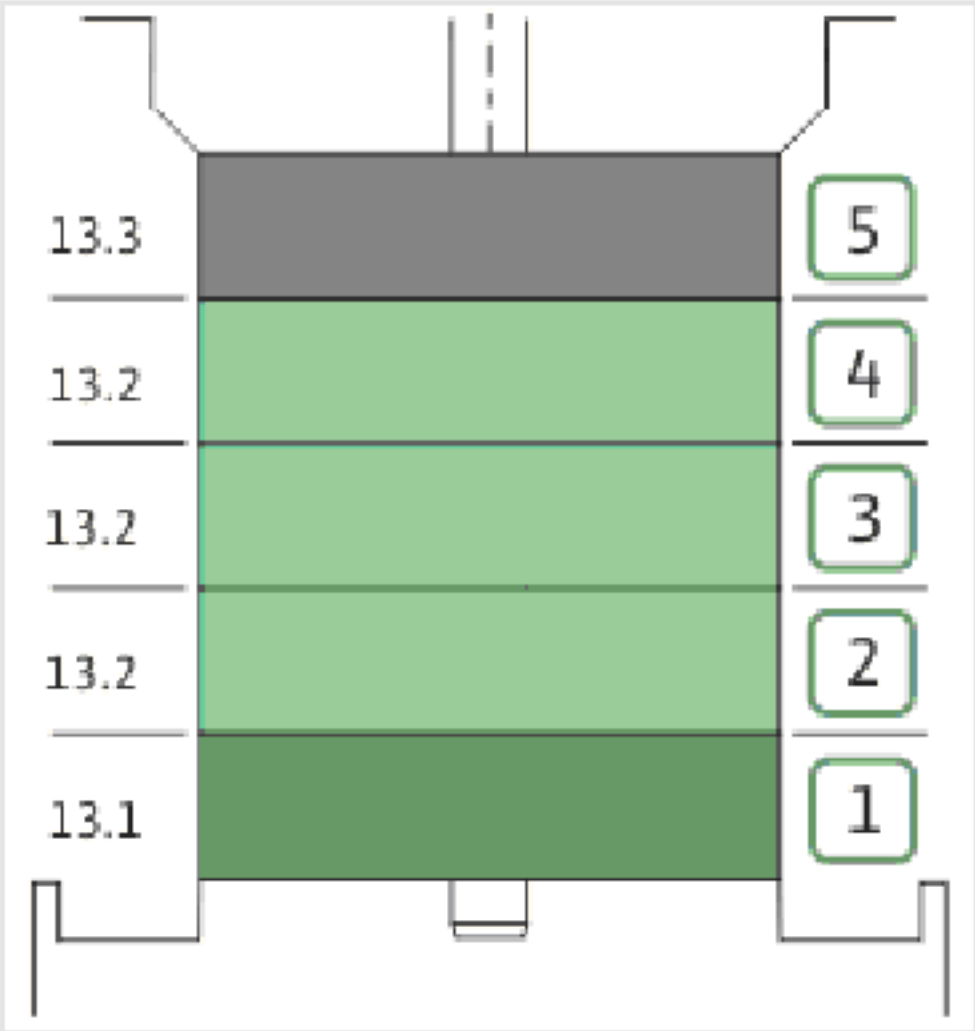
13.3
13.2
13.2
13.2
13.1
5
4
3
2
1

| Item | Article no. | Description | Quantity |
|---|---|---|---|
| 13.1 | 4164727 | INTERMEDIAIRE STAGE HELIX 52 1.4301 KIT | 1 |
| | | > SLEEVE-SPACER-D22XL30,42-316L | 1 |
| | | > MACH.BEARING-DIFFUSER+NR-M+52-304 | 1 |
| | | > SHAFT-SLEEVE-D26xD22x16-CW | 1 |
| | | > SPACER WASHER D22,3XD36 L3-316L | 1 |
| | | > IMPELLER-H2-M+52-304 | 1 |
| 13.1A | 4161200 | > NECK RING 1.STAGE HELIX V36/52 KIT | 1 |
| | | >> NECK-RING-M+36/52 | 1 |
| | | >> HYDRAULIC SUPPORT CAP M+36/52 304 | 1 |
| | | >> SCREW TCL M3X8 A4 POZIDRIV | 1 |
| 13.2 | 4164728 | INTERMEDIATE STAGE HELIX 52 1.4301 KIT | 1 |
| | | > MACH.STD-DIFFUSER+NR-M+52-304 | 1 |
| | | > IMPELLER-H5-M+52-304 | 1 |
| 13.3 | 4164729 | UPPER-STAGE HELIX 52 1.4301 KIT | 1 |
| | | > STOP COLLAR OF IMPELLER L27,6-Ø22-316L | 1 |
| | | > SLEEVE-SPACER-D22XL16,66-316L | 1 |
| | | > SPACER WASHER D22,3XD36 L3-316L | 1 |
| | | > IMPELLER-H2-M+52-304 | 1 |
| | | > MACH.STD-DISCHARGE-CHAMBER-M+52-304 | 1 |

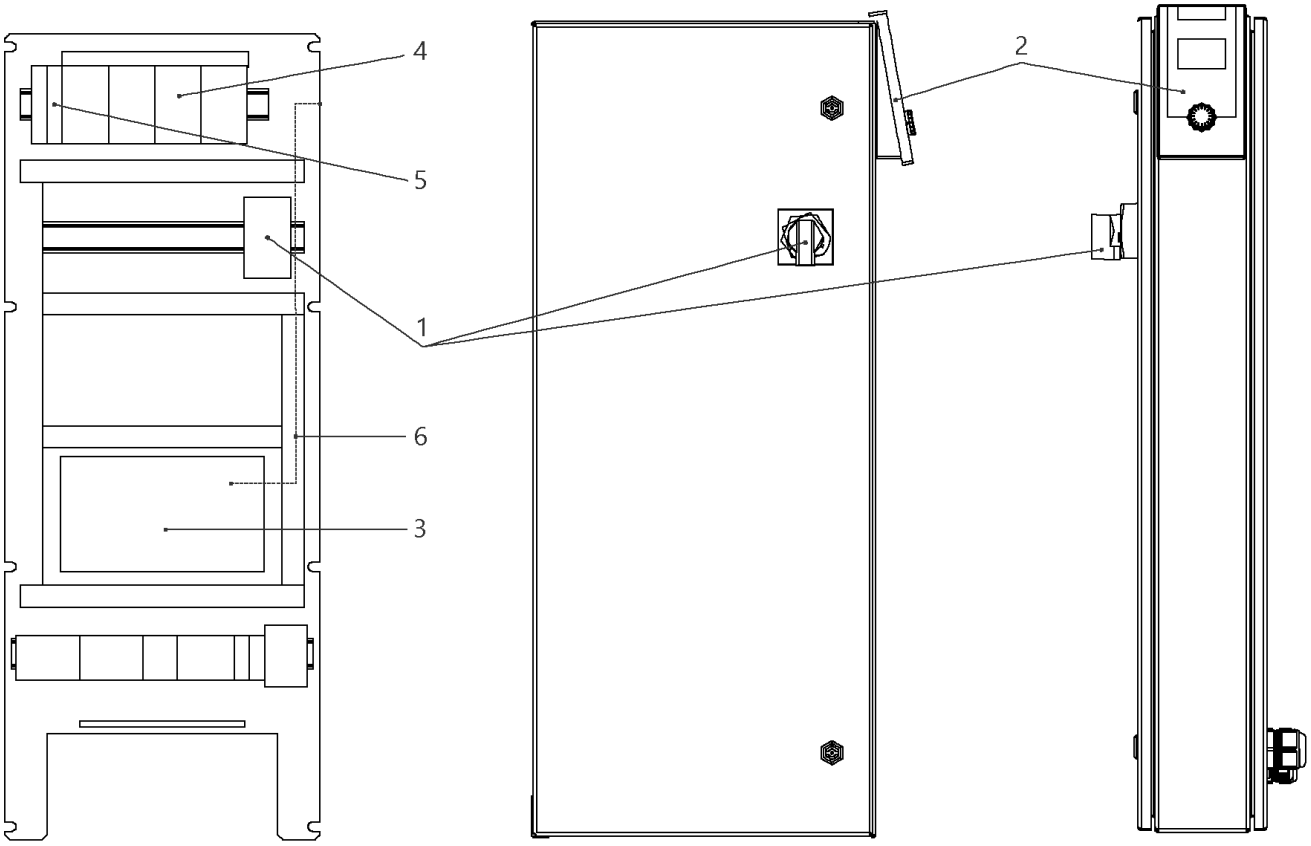
4
5
1
6
3
2

## W-CTRL-SCE-B-3x37,5A-T34-FM-ND4-AVC-PKG

| Item | Article no. | Description | Quantity |
|---|---|---|---|
| 1 | 2050183 | MAIN SWITCH OT160E3-2 VP. | 1 |
| 1 | 2090420 | HANDLE OHY 65J6/SHAFT OXP6x290 KIT | 1 |
| 2 | 4184784 | CONTROL PANEL HMI SC KIT | 1 |
| 2 | 4185259 | ASSEMBLY DISPLAY SC PKG VP. | 1 |
| Note: DISPLAY ALONE / PLATINE SEULE | | | |
| 3 | 4185257 | ASSEMBLY CPU SCe Booster VP. | 1 |
| 4 | 2051221 | AUTOM.CIRCUIT BREAKER S203 B50 FOR22kW | 1 |
| 5 | 2046288 | CIRCUIT BREAKER S201 B16 | 1 |
| 6 | 4194956 | PATCH CABLE RJ45 CAT6 1,0M BLUE SC-PANEL | 1 |

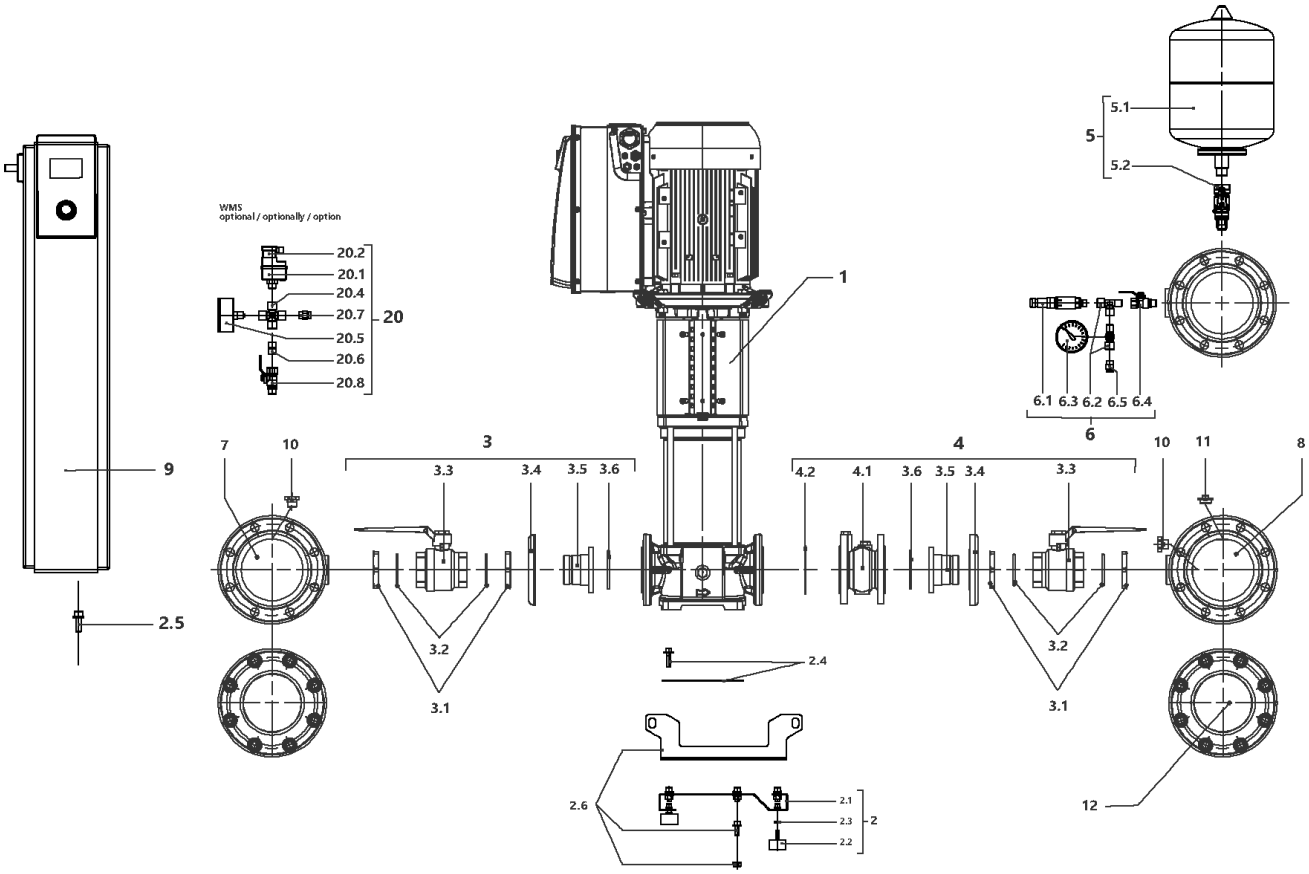
WMS
optional / optionally / option
20.2
20.1
20.4
20.7
20.5
20.6
20.8
20
1
5.1
5
5.2
6.1 6.3 6.2 6.5 6.4
6
9
7
10
3
3.3
3.4
3.5 3.6
4
4.2
4.1
3.6 3.5 3.4
3.3
10
11
8
2.5
3.2
3.1
2.4
3.2
3.1
2.6
2.1
2.3
2.2
2
12

## SiBoost Smart 3HELIX VE2202/3kW (2540938)

| Item | Article no. | Description | Quantity |
|---|---|---|---|
| 1 | | HELIX VE2202-3.0-4/16/E/S | 1 |
| 2 | 4203986 | BASE PLATE DE3 1150x420 M10 KIT | 1 |
| 2.1 | | > BASEPLATE_3x4/6/10/16V_E300_BOX_150 | 1 |
| 2.2 | 2027881 | > VIBRATION DAMPER M.10X20 D.70 | 1 |
| 2.3 | 2028281 | > NUT M10 DIN936 (ISO4035) 17H VZ | 1 |
| 2.4 | 4203978 | > HOLDER PUMP Siboost Helix 22 KIT | 1 |
| 2.5 | 4197084 | > HOLDER SWITCHBOX WILO Smart Control KIT | 1 |
| 2.6 | 4203979 | > LIFTING Siboost HELIX 22/36 KIT | 1 |
| 3 | 4203980 | SUCTION SIDE Siboost Helix 22 KIT | 1 |
| 3.1 | 2028689 | > NUT G2"X14 RG | 1 |
| 3.2 | 2028690 | > O-RING ID.53,35X5,33 EP851 | 1 |
| 3.2 | 2663977 | > BALL VALVE TYP250W IG.2" PN35 GIACOMINI | 1 |
| 3.4 | 2028285 | > LAPPED FLANGE DN50 1.4301 DIN2642P | 1 |
| 3.5 | 4203981 | > UNION INSERT DN50-G2" FLANGE AISI304 VP. | 1 |
| 3.6 | 2029911 | > O-RING ID.69,2X5,33 EPDM 70 SHR | 1 |
| 4 | 4203982 | DELIVERY SIDE Siboost Helix 22 KIT | 1 |
| 3.1 | 2028689 | > NUT G2"X14 RG | 1 |
| 3.2 | 2028690 | > O-RING ID.53,35X5,33 EP851 | 1 |
| 3.3 | 2663977 | > BALL VALVE TYP250W IG.2" PN35 GIACOMINI | 1 |
| 3.4 | 2028285 | > LAPPED FLANGE DN50 1.4301 DIN2642P | 1 |
| 3.5 | 4203981 | > UNION INSERT DN50-G2" FLANGE AISI304 VP. | 1 |
| 3.6 | 2029911 | > O-RING ID.69,2X5,33 EPDM 70 SHR | 1 |
| 4.1 | 2118590 | > NON RETURN VALVE DN50 PN16 VP. | 1 |
| 4.2 | 4202854 | > Flat gasket D61x107x2_DN50_PN25_FIBER VP | 1 |
| 5 | 4203983 | DIAPHREM TANK 8L/PN16 DIN4807/T5 KIT | 1 |
| 5.1 | 2045914 | > DIAPHREM TANK 8L TYP-DD 16BAR | 1 |
| 5.2 | 4189350 | > FLOW FITTING G3/4 FOR DIAPHRAG VESSEL VP | 1 |
| 6 | 4197076 | PRESSURE SENSOR/ GAUGE 0-16BAR KIT | 1 |
| 6.1 | 2085909 | > PRESS.SENSOR 1/4" 0-16BAR 4-20MA VP. | 1 |
| 6.2 | 4197077 | > T-PIECE 1/4" VP. | 1 |
| 6.3 | 2028692 | > PRESSURE GAUGE NG63-PN16-G1/4 | 1 |
| 6.4 | 2028291 | > BALL TAP R1/4" PN42 GIACOMINI R254DL | 1 |
| 6.5 | 2028691 | > BLOWGUN 1/4" MS 30BAR VP. | 1 |
| 7 | 4203987 | PIPE DE3 DN100-3x2"+2x1/4x900 VP. | 1 |

| Item | Article no. | Description | Quantity |
|---|---|---|---|
| 8 | 4203988 | PIPE DE3 DN100-3x2"+2x1/4+1x3/4x900 VP. | 1 |
| 9 | | W-CTRL-SCE-B-3x13A-T34-FM-ND2-AVC-PKG | 1 |
| 10 | 4197079 | PLUG G1/4"x10 AISI304 KIT | 1 |
| 11 | 2032654 | PLUG R3/4" MS VIEGA 1751 | 1 |
| 12 | 4203989 | BLIND-FLANGE DN100 PN16 -1.4301 KIT | 1 |
| | 2094573 | > NUT M16 DIN934 A2 1.4301 VP. | 1 |
| | 2107590 | > SCREW M16x70 DIN933 A2 (8 PIECES) | 1 |
| | 2094572 | > WASHER A17 DIN125 A2 1.4301 VP. | 1 |
| | | > FULL FLANGE ST.DN100 PN16 EN1092-1/05 A2 | 1 |
| | | > FLANGE COVER DN100 DIN 3443 FORM A | 1 |
| | 2106342 | > FLAT GASKET D.120/162X2 DN100 C4430 VP. | 1 |
| 20 | | ASSEMBLY WMS. DE-EB. +VP | 1 |
| 20.1 | 2028652 | > PRESSURE SWITCH PS3-ASR 1/(1,3) VP. | 1 |
| 20.2 | 2130983 | > PLUG PS3-415 WITH KABEL 1,5M 2NO VP. | 1 |
| 20.4 | 2028290 | > CROSSPIECE R1/4" MS-NICKEL | 1 |
| 20.5 | 2028687 | > PRESSURE GAUGE NG63 R1/4" HI.0-6BAR | 1 |
| 20.6 | 2054268 | > DUAL NIPPLE G1/4" x G1/4" MS VP. | 1 |
| 20.7 | 2028691 | > BLOWGUN 1/4" MS 30BAR VP. | 1 |
| 20.8 | 2028291 | > BALL TAP R1/4" PN42 GIACOMINI R254DL | 1 |

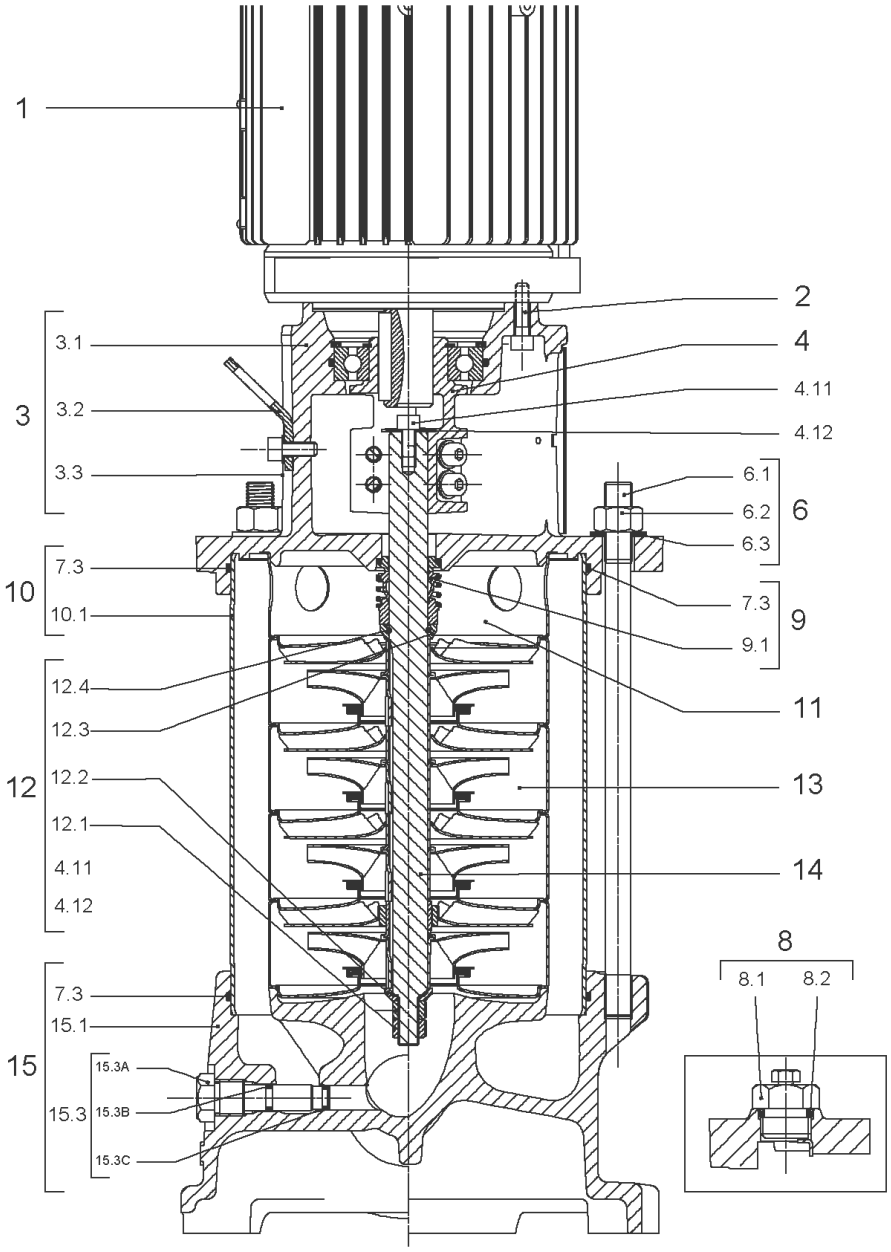
1
2
4
4.11
4.12
3
3.1
3.2
3.3
6
6.1
6.2
6.3
10
7.3
10.1
9
7.3
9.1
11
12
12.4
12.3
12.2
12.1
4.11
4.12
13
14
15
7.3
15.1
15.3
15.3A
15.3B
15.3C
8
8.1
8.2

| Item | Article no. | Description | Quantity |
|---|---|---|---|
| 1 | | DRIVE HELIX-VE2202-3.0-WE KIT | 1 |
| Note: MOTOR BRAND WILO ELEC | | | |
| 1 | | DRIVE HELIX-VE2202-3.0-IE4-WE KIT | 1 |
| Note: MOTOR BRAND WILO ELEC | | | |
| 2 | 4159707 | SCREW M8X30 (4 PIECES) | 1 |
| 3 | 4186356 | LANTERN HELIX OPTI 8" FT130 KIT | 1 |
| 3.1 | | > M+8_LANTERN_ONE-PIECE_FT130_CATA_DWA | 1 |
| 3.2 | 4184852 | > EYELET CPL.FT HELIX (2 PIECES) | 1 |
| 3.3 | 4184853 | > COUPLING PROTECTOR FT HELIX 8'' KIT | 1 |
| 4 | 4184854 | COUPLING D.22XD.28 FT130 HELIX KIT | 1 |
| 6 | 4179563 | STUD BOLT M16X198 KIT | 1 |
| 6.1 | | > TIE BOLT M16-198x24x44-1.4057 | 1 |
| 6.2 | 4179562 | > NUT M16 8.8 ISO4032 (4 PIECES) | 1 |
| 6.3 | 4097852 | > WASHER-CS-16.4-32-2.8-NFE25-511-A2 | 1 |
| 8 | 4186377 | FILING/PURGING PLUG 304 HELIX KIT | 1 |
| 8.1 | | > FILLING/VENTING-PLUG-MVI8/10"-304 | 1 |
| 8.2 | 4032291 | > O-RING 17x3 EPDM KTW/WRC | 1 |
| 9 | 4192148 | SEAL-KIT-HELIX22-36-52 FIRST O/E | 1 |
| 7.3 | 4179571 | > O-RING HOUSING PIPE HELIX22/36/52 VP. | 1 |
| 9.1 | 4179573 | > M.SEAL.HELIX22-36-52 O/E VP. | 1 |
| 10 | 4181154 | HOUSING PIPE D.204X164 1.4307 KIT | 1 |
| 7.3 | 4179571 | > O-RING HOUSING PIPE HELIX22/36/52 VP. | 1 |
| 10.1 | | > HOUSING-PIPE Ø204-M+2201/2202-304 | 1 |
| 11 | 4179143 | CENTERING STAGE-RETURN HELIX22 1.4307 VP | 1 |
| 12 | 4184856 | SHAFT EQUIPMENT HELIX 22 FIRST KIT | 1 |
| 13 | | HYDRAULIC HELIX V 2202 | 1 |
| 14 | 4184857 | SHAFT D.22X251 1.4057 VP. | 1 |
| 15 | 4186357 | EQUIPED HOUSING HELIX OPTI DN50 GJL KIT | 1 |
| 15.1 | | > PUMP CASING MONO.GJL M+8" DN50 DWA | 1 |
| 15.3 | 4106048 | > DRAIN/PRIMING PLUG EPDM HELIX FIRST KIT | 1 |
| 15.3A | | >> DRAIN AND PRIMING PLUG-VMI10"-304 | 1 |
| 15.3B | 4032293 | >> O-RING-10x3-EPDM-KTW/WRC | 1 |
| 15.3C | 4233957 | >> O-RING ID.9 EPDM VP. | 1 |
| 7.3 | 4179571 | > O-RING HOUSING PIPE HELIX22/36/52 VP. | 1 |

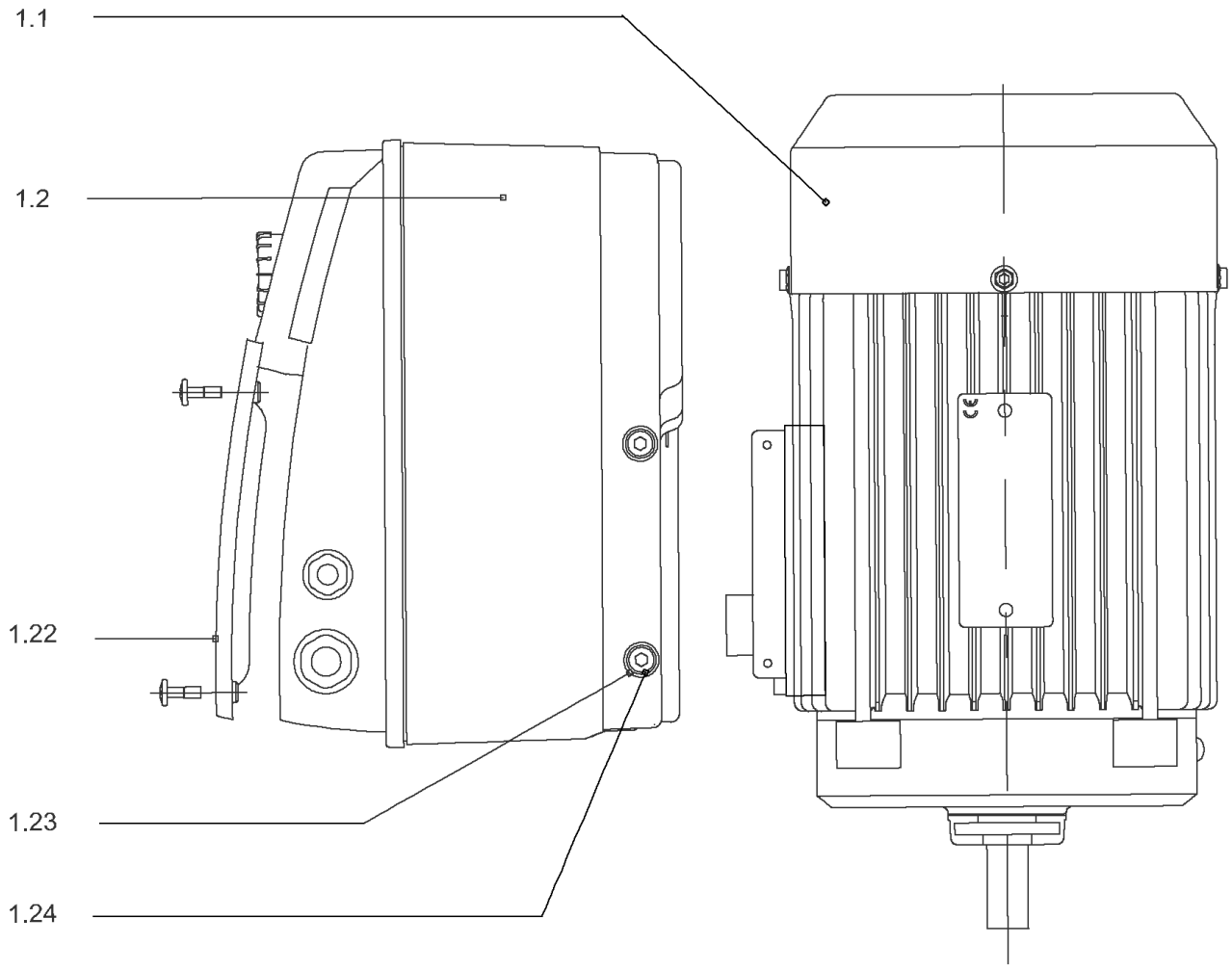
1.1
1.2
1.22
1.23
1.24

## DRIVE HELIX-VE2202-3.0-WE KIT

| Item | Article no. | Description | Quantity |
|---|---|---|---|
| 1.1 | | M3-T638P55V18H-100F13-SU-N28-WE-IE2 VP. | 1 |
| Note: no longer available/nicht mehrlieferbar/n'est plus disponible | | | |
| | | SPARE PARTS MOTOR:ON REQUEST | 1 |
| 1.2 | 4186411 | MODULE HELIX-VE2202-3.0-IE2-WE KIT | 1 |
| 1.22 | 2054227 | > MODULE COVER/GASKET TL3/4 KIT | 1 |
| 1.23 | 4215716 | > SCREW M5X16 DIN912 8.8 A2A (4pieces) VP. | 1 |
| 1.24 | 2057978 | > RONDELLE A5,3 DIN6797 FST ZN (4 PIECES) | 1 |

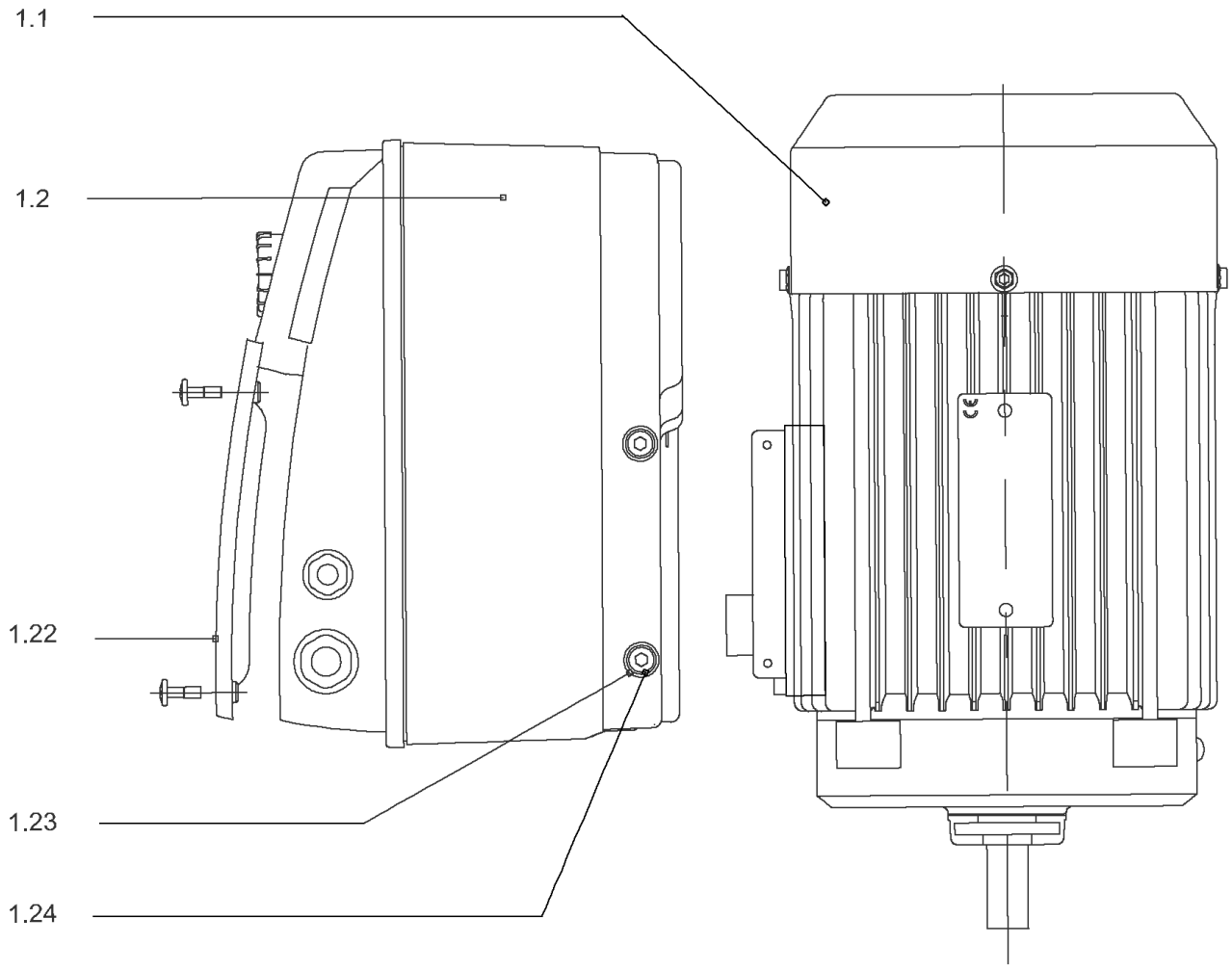
1.1
1.2
1.22
1.23
1.24

## DRIVE HELIX-VE2202-3.0-IE4-WE KIT

| Item | Article no. | Description | Quantity |
|---|---|---|---|
| 1.1 | 4207922 | MOTOR 3/2/100 3~ 380V 60HZ IE4 WE VP. | 1 |
| | | SPARE PARTS MOTOR:ON REQUEST | 1 |
| 1.2 | 4209341 | MODULE HELIX-VE2202-3.0-IE4-WE KIT | 1 |
| 1.22 | 2054227 | > MODULE COVER/GASKET TL3/4 KIT | 1 |
| 1.23 | 4215716 | > SCREW M5X16 DIN912 8.8 A2A (4pieces) VP. | 1 |
| 1.24 | 2057978 | > RONDELLE A5,3 DIN6797 FST ZN (4 PIECES) | 1 |

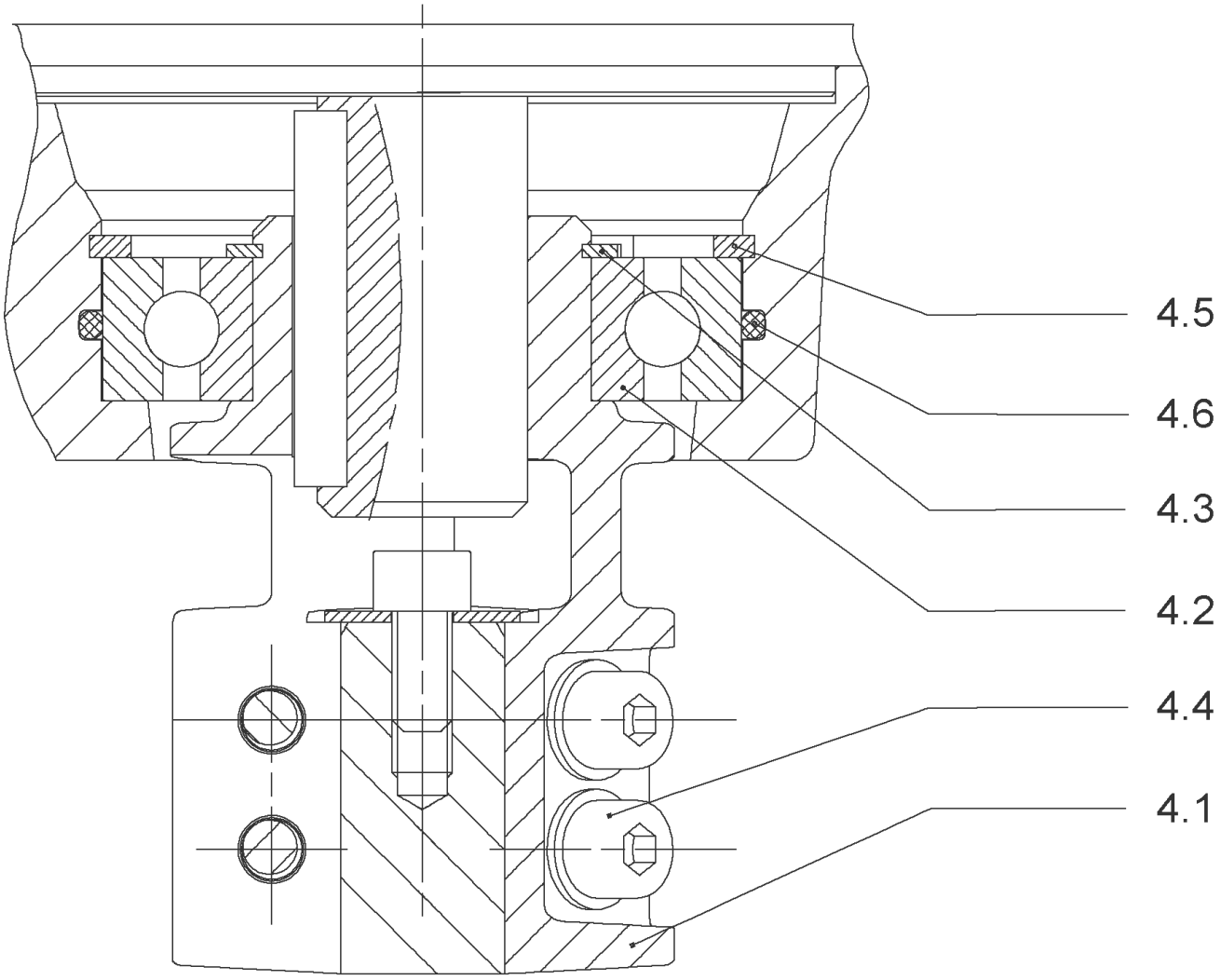
4.5
4.6
4.3
4.2
4.4
4.1

## COUPLING D.22XD.28 FT130 HELIX KIT (4184854)

| Item | Article no. | Description | Quantity |
|---|---|---|---|
| 4.1 | | COUPLING-VMI-Ø22xØ28-FT130-MACHINED | 1 |
| 4.2 | 2131022 | BALL BEARING 6209/ZZ-C3(HT)VP. | 1 |
| 4.3 | 4233930 | CIRCLIP-FOR-BORES-D45x1,75 VP. | 1 |
| 4.4 | 4157726 | SCREW KIT M8X30 (4 PIECES) | 1 |
| 4.5 | 4234252 | CIRCLIPS 85X3 VP. | 1 |
| 4.6 | 4234243 | O-RING 85X3 VP. | 1 |
| | | NOMEL CONTACT WASHER 8x16x1,4 STEEL ZC | 1 |

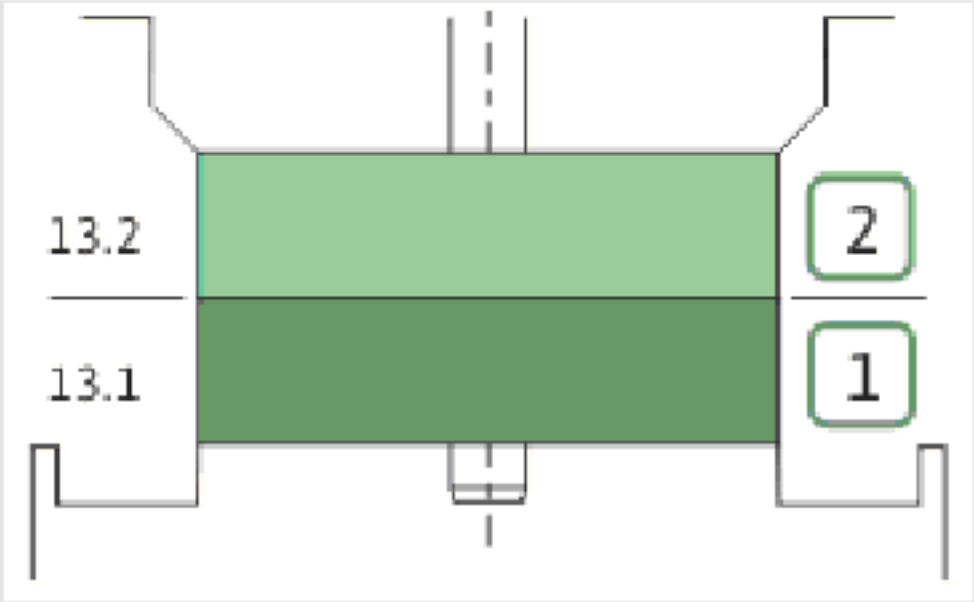
13.2
13.1
2
1

| Item | Article no. | Description | Quantity |
|---|---|---|---|
| 13.1 | 4157739 | FIRST STAGE HELIX 22 1.4307 KIT | 1 |
| | | > IMPELLER-H1-M+22-304 | 1 |
| | | > MACH.STG-CASING-WOGV-WNR-M+22-304 | 1 |
| 13.2 | 4157740 | BEARING STAGE HELIX 22 1.4307 KIT | 1 |
| | | > IMPELLER-H2-M+22-304 | 1 |
| | | > MACH.BEARING-STG-CASING-WNR-M+22-304 | 1 |
| | | > SHAFT-SLEEVE-D26xD22x16-CW | 1 |

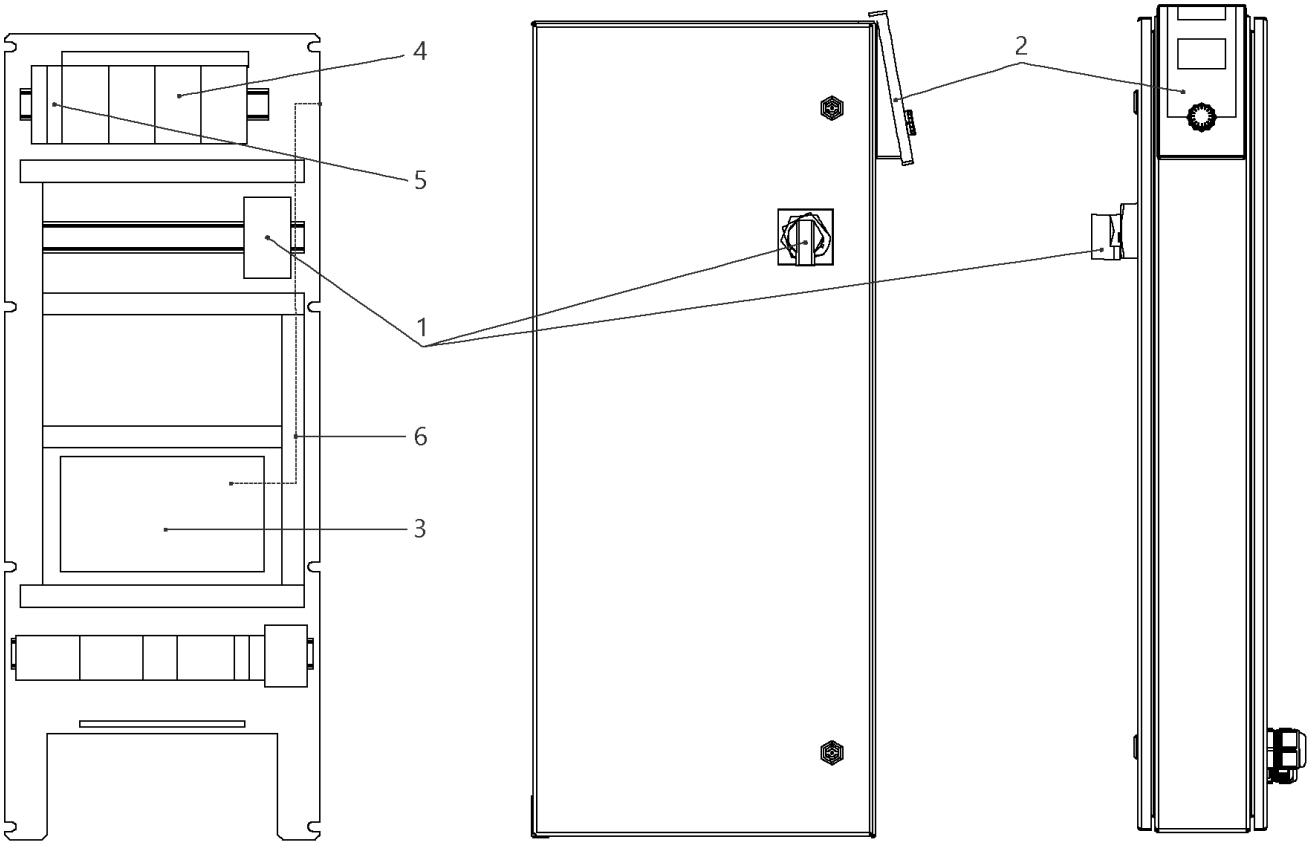
4
5
1
6
3
2

## W-CTRL-SCE-B-3x13A-T34-FM-ND2-AVC-PKG

| Item | Article no. | Description | Quantity |
|---|---|---|---|
| 1 | 2104473 | MAIN SWITCH OT63F3 L105 KIT | 1 |
| 2 | 4184784 | CONTROL PANEL HMI SC KIT | 1 |
| 2 | 4185259 | ASSEMBLY DISPLAY SC PKG VP. | 1 |
| Note: DISPLAY ALONE / PLATINE SEULE | | | |
| 3 | 4185257 | ASSEMBLY CPU SCe Booster VP. | 1 |
| 4 | 2051217 | AUTOM.CIRCUIT BREAKER S203 B16 TO7,5kW | 1 |
| 5 | 2046288 | CIRCUIT BREAKER S201 B16 | 1 |
| 6 | 4194956 | PATCH CABLE RJ45 CAT6 1,0M BLUE SC-PANEL | 1 |

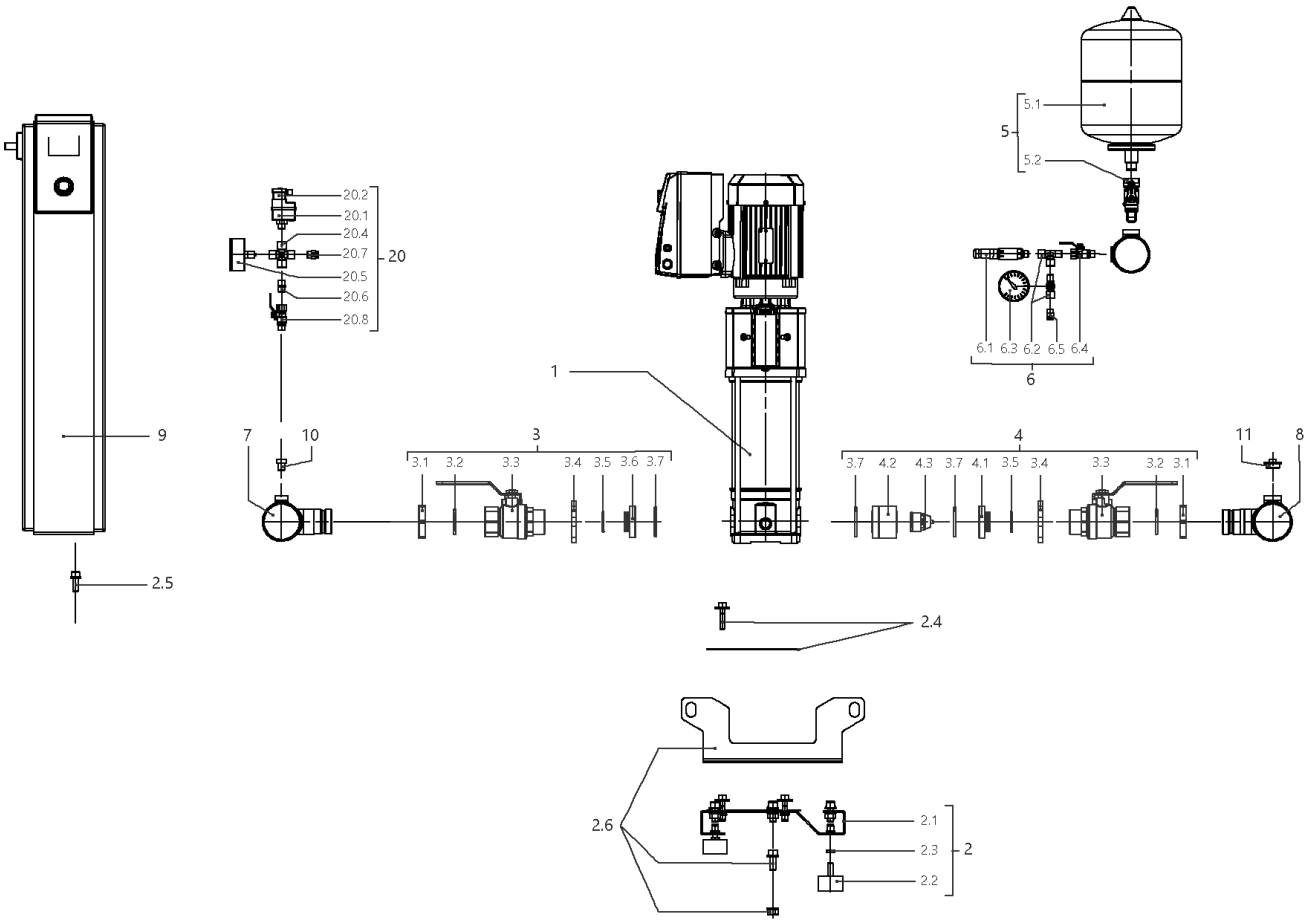
5.1
5
5.2
20.2
20.1
20.4
20.7
20
20.5
20.6
20.8
6.1 6.3 6.2 6.5 6.4
6
1
9
7
10
3
3.1 3.2 3.3 3.4 3.5 3.6 3.7
4
3.7 4.2 4.3 3.7 4.1 3.5 3.4 3.3 3.2 3.1
11
8
2.5
2.4
2.6
2.1
2.3
2
2.2

## SiBoost Smart 4HELIX VE204 (2541592)

| Item | Article no. | Description | Quantity |
|---|---|---|---|
| 1 | | HELIX VE204-1/16/E/S | 1 |
| Note: TO / BIS / JUSQU'AU 29/02/2016 | | | |
| 1 | 4201563 | HELIX VE204-1/16/E/S | 1 |
| Note: FROM / AB / À PARTIR DU 01/03/2016 | | | |
| 2 | 4200143 | BASE PLATE DE4 1450x300 KIT | 1 |
| 2.1 | | > BASEPLATE_4x4/6/10V_E300_1450x300BOX_150 | 1 |
| 2.2 | 2028654 | > VIBRATION DAMPER D.50X30 M10X28 | 1 |
| 2.3 | 2028281 | > NUT M10 DIN936 (ISO4035) 17H VZ | 1 |
| 2.4 | 4199875 | > HOLDER PUMP Siboost Helix V2/4 KIT | 1 |
| 2.5 | 4197084 | > HOLDER SWITCHBOX WILO Smart Control KIT | 1 |
| 2.6 | 4197085 | > LIFTING Siboost HELIX SC KIT | 1 |
| 3 | 4199876 | SUCTION SIDE Siboost Helix V2/4/6 KIT | 1 |
| 3.1 | 2032610 | > NUT G11/4 MS VP. | 1 |
| 3.2 | 2032611 | > O-RING ID.36,09X3,53N DIN3771 E7502 | 1 |
| 3.3 | 2507646 | > BALL VALVE G11/4"M-F-W.HANDLE 1/4-TURN | 1 |
| 3.4 | 2032613 | > SCREWED FLANGE G1 1/4" LK-75 ST37VZ | 1 |
| 3.5 | 2032614 | > O-RING ID.29,82X2,62N DIN3771 E7502 | 1 |
| 3.6 | 2032615 | > SPACER F.I/A KUH.DN32 CUZN | 1 |
| 3.7 | 2032616 | > O-RING ID.44X3,53N DIN3771 E7502 | 1 |
| 4 | 4199877 | DELIVERY SIDE Siboost Helix V2/4/6 KIT | 1 |
| 3.1 | 2032610 | > NUT G11/4 MS VP. | 1 |
| 3.2 | 2032611 | > O-RING ID.36,09X3,53N DIN3771 E7502 | 1 |
| 3.3 | 2507646 | > BALL VALVE G11/4"M-F-W.HANDLE 1/4-TURN | 1 |
| 3.4 | 2032613 | > SCREWED FLANGE G1 1/4" LK-75 ST37VZ | 1 |
| 3.5 | 2032614 | > O-RING ID.29,82X2,62N DIN3771 E7502 | 1 |
| 4.1 | 2058116 | > SPACER F.I/A KUH.DN32 CUZN | 1 |
| 3.7 | 2032616 | > O-RING ID.44X3,53N DIN3771 E7502 | 1 |
| 4.2 | 2058115 | > HOUSING RFV(RV-IN) DN32 SGS/DRS | 1 |
| 4.3 | 2027870 | > NON-RETURN-DEVICE INSERT DN32(MTR) | 1 |
| 5 | 2032642 | DIAPHREM TANK 8L/PN16 DIN4807/T5 KIT | 1 |
| 5.1 | 2045914 | > DIAPHREM TANK 8L TYP-DD 16BAR | 1 |
| 5.2 | 2027853 | > FLOW FITTING G3/4 FOR DIAPHRAGM VES. | 1 |
| 6 | 4197076 | PRESSURE SENSOR/ GAUGE 0-16BAR KIT | 1 |
| 6.1 | 2085909 | > PRESS.SENSOR 1/4" 0-16BAR 4-20MA VP. | 1 |

| Item | Article no. | Description | Quantity |
|---|---|---|---|
| 6.2 | 4197077 | > T-PIECE 1/4" VP. | 1 |
| 6.3 | 2028692 | > PRESSURE GAUGE NG63-PN16-G1/4 | 1 |
| 6.4 | 2028291 | > BALL TAP R1/4" PN42 GIACOMINI R254DL | 1 |
| 6.5 | 2028691 | > BLOWGUN 1/4" MS 30BAR VP. | 1 |
| 7 | 4225310 | PIPE-2"-4x11/4-E300-2x1/4x1200 VP. | 1 |
| 8 | 4225311 | PIPE-2"-4x11/4-E300-2x1/4-1x3/4x1200 VP. | 1 |
| 9 | 2541915 | W-CTRL-SCE-B-4x10A-T34-FM-ND1-AVC-PKG | 1 |
| 10 | 4197079 | PLUG G1/4"x10 AISI304 KIT | 1 |
| 11 | 2032654 | PLUG R3/4" MS VIEGA 1751 | 1 |
| 20 | | ASSEMBLY WMS. DE-EB. +VP | 1 |
| 20.1 | 2028652 | > PRESSURE SWITCH PS3-ASR 1/(1,3) VP. | 1 |
| 20.2 | 2130983 | > PLUG PS3-415 WITH KABEL 1,5M 2NO VP. | 1 |
| 20.4 | 2028290 | > CROSSPIECE R1/4" MS-NICKEL | 1 |
| 20.5 | 2028687 | > PRESSURE GAUGE NG63 R1/4" HI.0-6BAR | 1 |
| 20.6 | 2054268 | > DUAL NIPPLE G1/4" x G1/4" MS VP. | 1 |
| 20.7 | 2028691 | > BLOWGUN 1/4" MS 30BAR VP. | 1 |
| 20.8 | 2028291 | > BALL TAP R1/4" PN42 GIACOMINI R254DL | 1 |

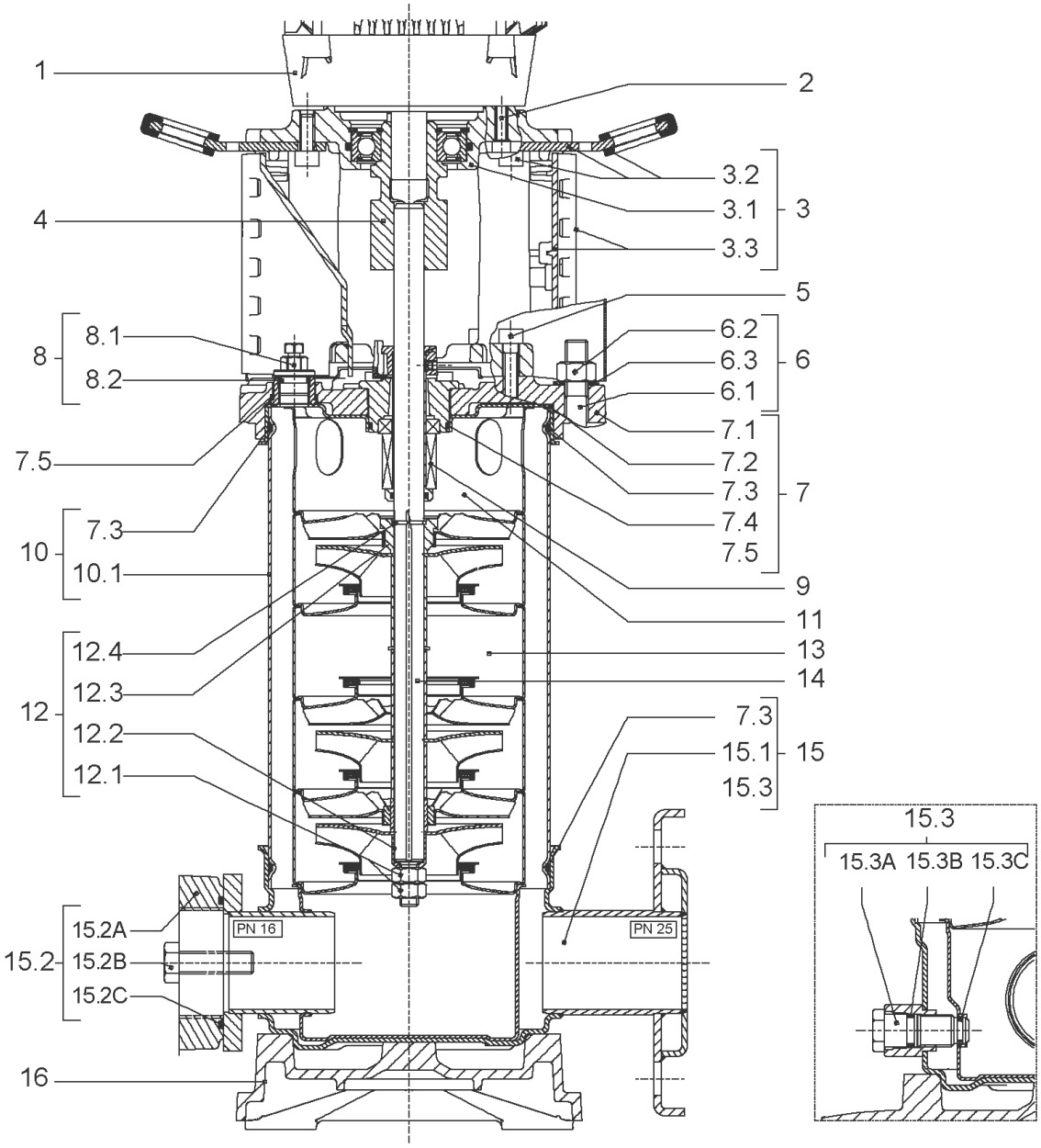
1
2
3.2
3.1
3
3.3
4
5
8.1
8
8.2
6.2
6.3
6
6.1
7.1
7.5
7.2
7.3
7
7.4
7.3
10
7.5
10.1
9
11
12.4
13
12.3
14
12
12.2
7.3
15.1
15
12.1
15.3
15.3
15.3A 15.3B 15.3C
15.2A
PN 16
PN 25
15.2
15.2B
15.2C
16

| Item | Article no. | Description | Quantity |
|---|---|---|---|
| 1 | | DRIVE HELIX-VE204-IE2-WE KIT | 1 |
| Note: MOTOR BRAND WILO ELEC | | | |
| 1 | | DRIVE HELIX-VE204-IE4-WE KIT | 1 |
| Note: MOTOR BRAND WILO ELEC | | | |
| 2 | 4159702 | SCREW M6X30 (4 PIECES) | 1 |
| 3 | 4171325 | LANTERN MONOBLOC FT85 HELIX KIT | 1 |
| 3.1 | | > M+5_6_LANTERN_ONE-PIECE_FT85_CATA | 1 |
| 3.2 | 2127604 | > EYELET CPL.FT HELIX(2 PIECES) | 1 |
| 3.3 | 4159692 | > COUPLING PROTECTOR FT HELIX KIT | 1 |
| 4 | 4178554 | COUPLING FT 85 Ø12XØ14 KIT | 1 |
| 5 | 4159707 | SCREW M8X30 (4 PIECES) | 1 |
| 6 | 2018368 | STUD BOLT M12X289 KIT | 1 |
| 6.1 | | > TIE BOLT M12-289x18x30-1.4057 | 1 |
| 6.2 | 2094647 | > NUT M12 M12 ISO4032 VP. | 1 |
| 6.3 | 2123557 | > WASHER CS-12.4-24-1.6-NFE25 (4 PIECES) | 1 |
| 7 | 4210143 | STATIONARY RING HOLDER HELIX 6" EPDM | 1 |
| 7.2 | 2127607 | > STATIONARY RING HOLDER 6" HELIX 1.4301 V | 1 |
| 7.3 | 4176513 | > O-RING FOR PUMP JACKET VP. | 1 |
| 7.4 | 2127603 | > O-RING ID.37,6x2,4 EPDM VP. | 1 |
| 7.5 | 2127602 | > O-RING ID.21,35x2 EPDM VP. | 1 |
| 8 | 4159686 | FILING/PURGING PLUG HELIX EPDM KIT | 1 |
| 9 | 4178564 | SEAL-KIT-HELIX2-4 O/E KIT | 1 |
| 10 | 2127574 | HOUSING PIPE D.152x160 1.4301 KIT | 1 |
| 7.3 | 4176513 | > O-RING FOR PUMP JACKET VP. | 1 |
| 10.1 | | > HOUSING-PIPE Ø152-M+1601/02-304 | 1 |
| 11 | 4179315 | CENTERING STAGE HELIX V2 1.4307 VP. | 1 |
| 12 | 4178568 | SHAFT EQUIPMENT HELIX V2/V4 KIT | 1 |
| 12.1 | | > NUT-H-M8-STAINLESS-STEEL A4-70 | 2 |
| 12.2 | | > SHAFT END WASHER Ø8/Ø12 316L | 1 |
| 12.3 | | > STOP COLLAR OF IMPELLER M+2/4 SINGLEBLOC | 1 |
| 12.4 | | > STOP-RUSH-1/2-D12xd2-M+316 | 2 |
| 13 | | HYDRAULIC HELIX V 204 1.4307 | 1 |
| 14 | 4178576 | SHAFT D.12X283 1.4301 VP. | 1 |
| 15 | 4174079 | PUMP HOUSING HELIX DN32 PN16 1.4301 KIT | 1 |

| Item | Article no. | Description | Quantity |
|---|---|---|---|
| 7.3 | 4176513 | > O-RING FOR PUMP JACKET VP. | 1 |
| 15.1 | | > BLASTING PPE HOUSING V-PN16-DN32-5"-304 | 1 |
| 15.2 | 4217889 | > COUNTER FLANGE-G1"-PN16-GJL KIT | 1 |
| 15.3 | 4171321 | > PRIMING/DRAIN PLUG EPDM HELIX KIT | 1 |
| 16 | 4177964 | BASEPLATE HELIX V2/4/6 PN16 VP. | 1 |

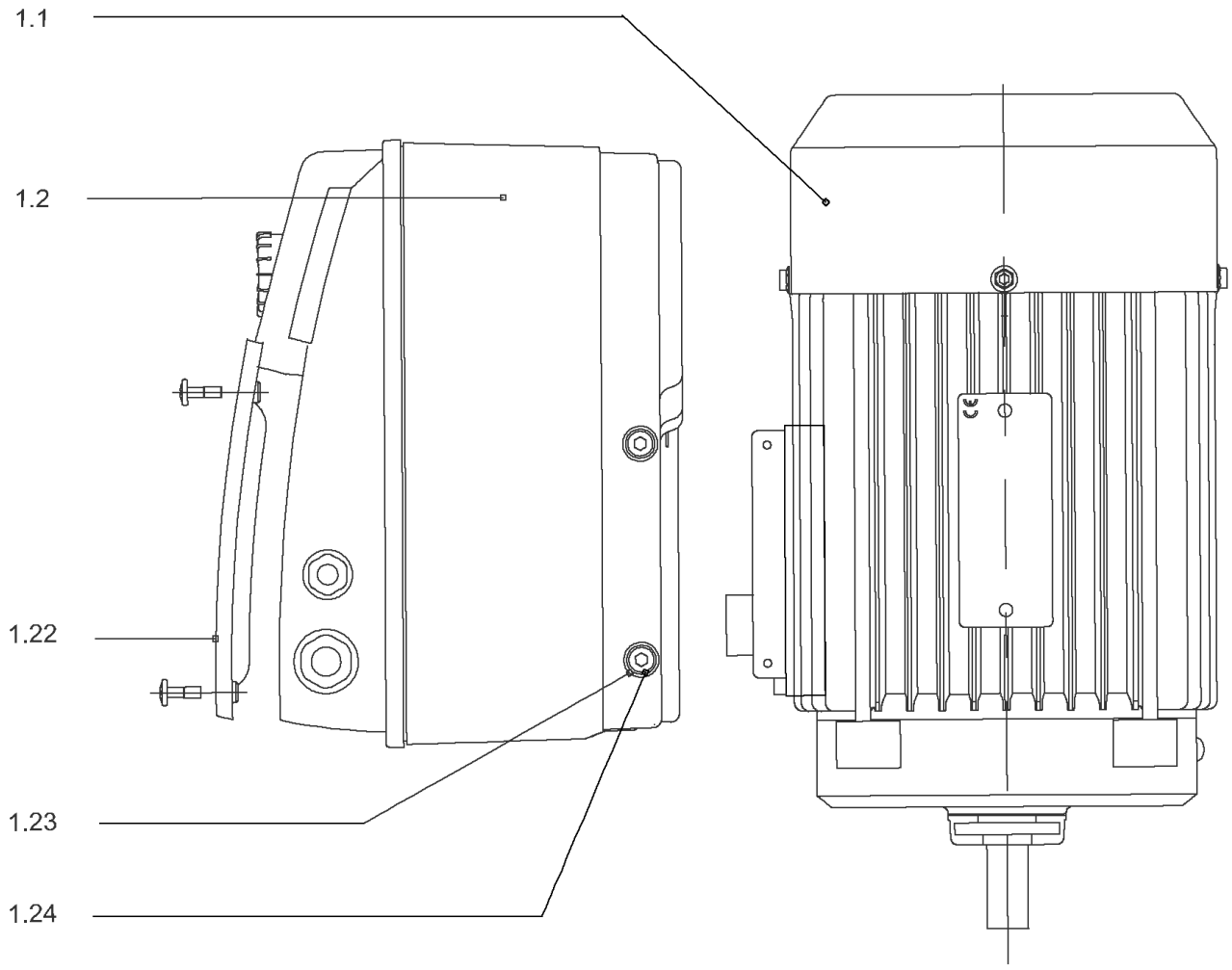
1.1
1.2
1.22
1.23
1.24

## DRIVE HELIX-VE204-IE2-WE KIT

| Item | Article no. | Description | Quantity |
|---|---|---|---|
| 1.1 | | MOTOR 0,55/2/80 3~ 380V 60HZ IE2 WE VP. | 1 |
| Note: no longer available/nicht mehrlieferbar/n'est plus disponible | | | |
| | | SPARE PARTS MOTOR:ON REQUEST | 1 |
| 1.2 | 4184861 | MODULE HELIX-VE204-IE2-WE KIT | 1 |
| 1.22 | 2054372 | > MODULE COVER TL1,TL2+GASKET KIT | 1 |
| 1.23 | 4215716 | > SCREW M5X16 DIN912 8.8 A2A (4pieces) VP. | 1 |
| 1.24 | 2057978 | > RONDELLE A5,3 DIN6797 FST ZN (4 PIECES) | 1 |

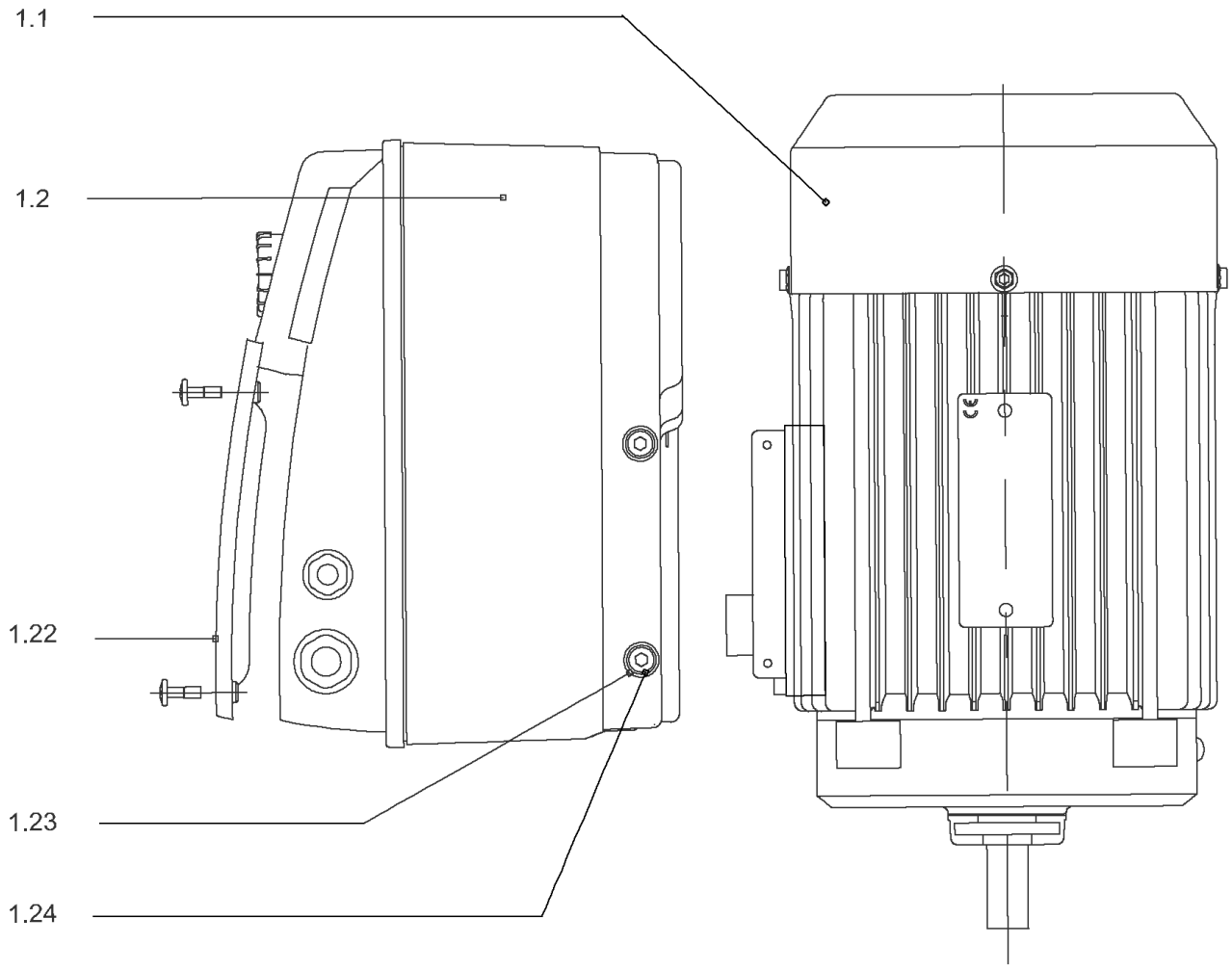
1.1
1.2
1.22
1.23
1.24

## DRIVE HELIX-VE204-IE4-WE KIT

| Item | Article no. | Description | Quantity |
|---|---|---|---|
| 1.1 | 4207912 | MOTOR 0.55/2/71 3~ 380V 60HZ IE4 WE VP. | 1 |
| | | SPARE PARTS MOTOR:ON REQUEST | 1 |
| 1.2 | 4209318 | MODULE HELIX-VE204-IE4-WE KIT | 1 |
| 1.22 | 2054372 | > MODULE COVER TL1,TL2+GASKET KIT | 1 |
| 1.23 | 4215716 | > SCREW M5X16 DIN912 8.8 A2A (4pieces) VP. | 1 |
| 1.24 | 2057978 | > RONDELLE A5,3 DIN6797 FST ZN (4 PIECES) | 1 |

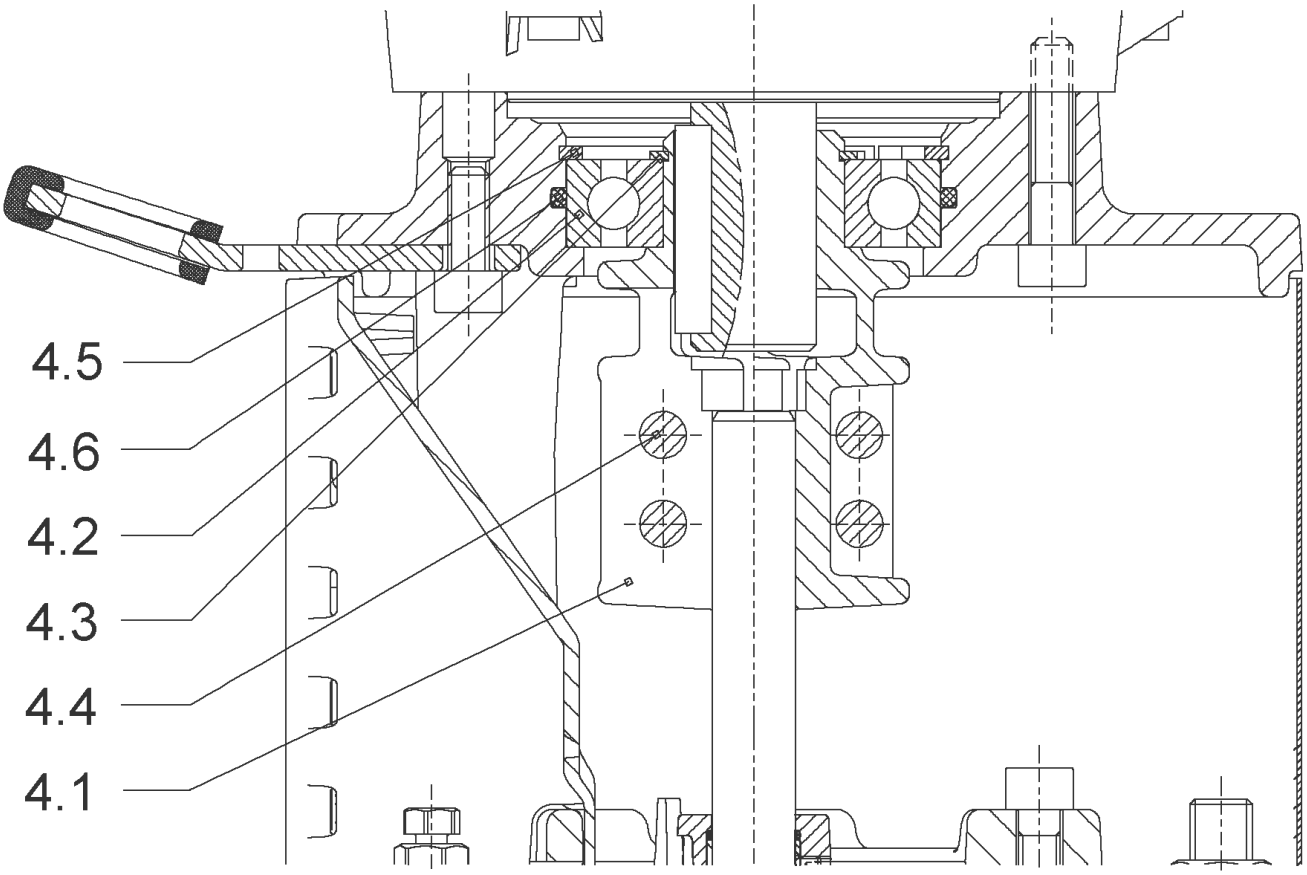
4.5
4.6
4.2
4.3
4.4
4.1

## COUPLING FT 85 Ø12XØ14 KIT (4178554)

| Item | Article no. | Description | Quantity |
|---|---|---|---|
| 4.1 | | COUPLING-M+ Ø12XØ14-FT85-MACHINED | 1 |
| 4.3 | 4208923 | CIRCLIP D25X1.2 VP. | 1 |
| 4.2 | 4177802 | BALL BEARING 6205C3-ZZ HTVP. | 1 |
| 4.4 | 4212716 | SCREW M6X20 KIT (4PIECES) | 1 |
| 4.5 | 4233124 | CIRCLIP-FOR-BORES-D52x2 VP. | 1 |
| 4.6 | 4234244 | O-RING 52X2 VP. | 1 |
| | | CONTACT-WASHER-6ETR-6,1x12,2x1,8-STEEL | 4 |

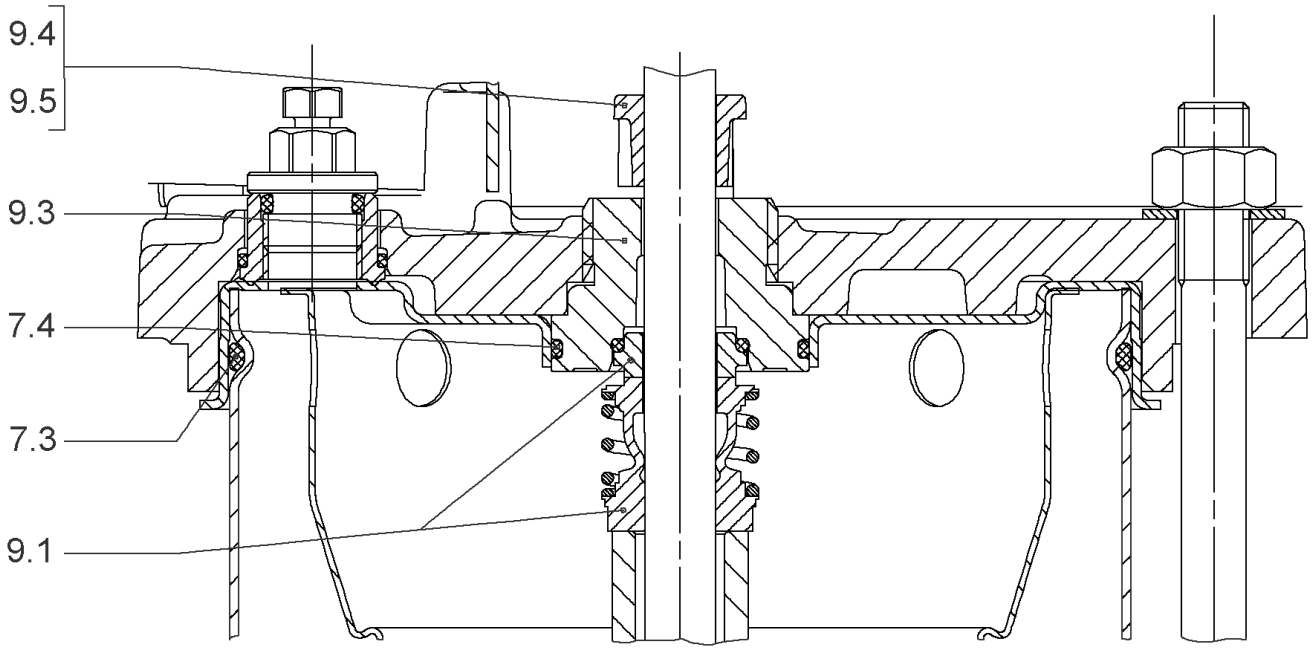
9.4
9.5
9.3
7.4
7.3
9.1

## SEAL-KIT-HELIX2-4 O/E KIT (4178564)

| Item | Article no. | Description | Quantity |
|---|---|---|---|
| 7.3 | 4176513 | O-RING FOR PUMP JACKET VP. | 1 |
| 7.4 | 2127603 | O-RING ID.37,6x2,4 EPDM VP. | 1 |
| 9.1 | 4178563 | M.SEAL.HELIX2-4 O/E VP. | 1 |
| 9.3 | 4178561 | RING HOLDER Ø22 1.4301 VP. | 1 |
| 9.5 | 4178562 | DRIVE RING D.22/12.2X10 MACH.VP. | 1 |
| 9.4 | 4176520 | SCREW CH M5x5 A4-70 ( 3PIECES ) | 1 |

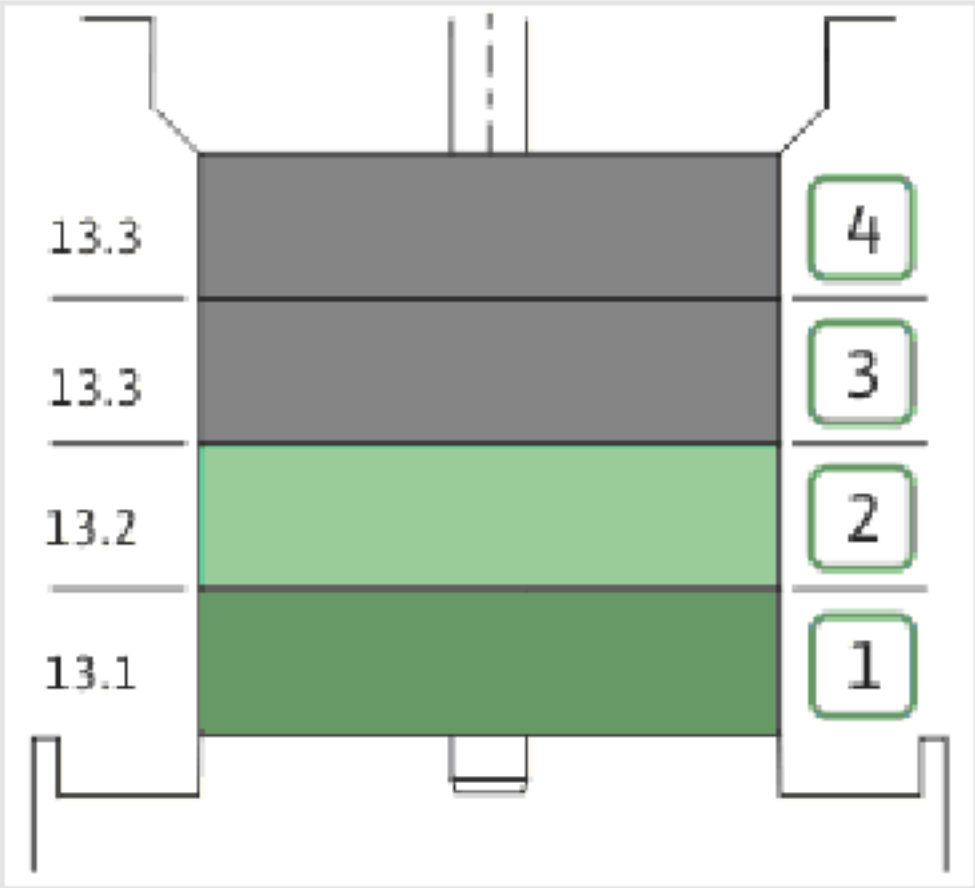
13.3
13.3
13.2
13.1
4
3
2
1

| Item | Article no. | Description | Quantity |
|---|---|---|---|
| 13.1 | 4179316 | STAGE HELIX 2 1.4301 KIT | 1 |
| | | > MACH.STG-CASING-WOGV-WNR-M+2-4-304 | 1 |
| | | > IMPELLER-M+2-304 | 1 |
| 13.2 | 4179317 | STAGE BEARING HELIX 2 1.4307 KIT | 1 |
| | | > MACH.BEARING-STG-CASING-WNR-M+2-304 | 1 |
| | | > IMPELLER-M+2-304 | 1 |
| | | > SHAFT SLEEVE SPACER Ø15,35x10,305-304 | 1 |
| | | > SHAFT-SLEEVE-D12xD16x14-CW | 1 |
| 13.3 | 4179319 | INTERMEDIATE STAGE HELIX 2 1.4301 KIT | 1 |
| | | > CORPS-ETG-STD-ACR-AJR-USIN.M+2-304 | 1 |
| | | > IMPELLER-M+2-304 | 1 |
| | | > IMPELLER SPACER Ø12,05X14,85-L24,285-304 | 1 |

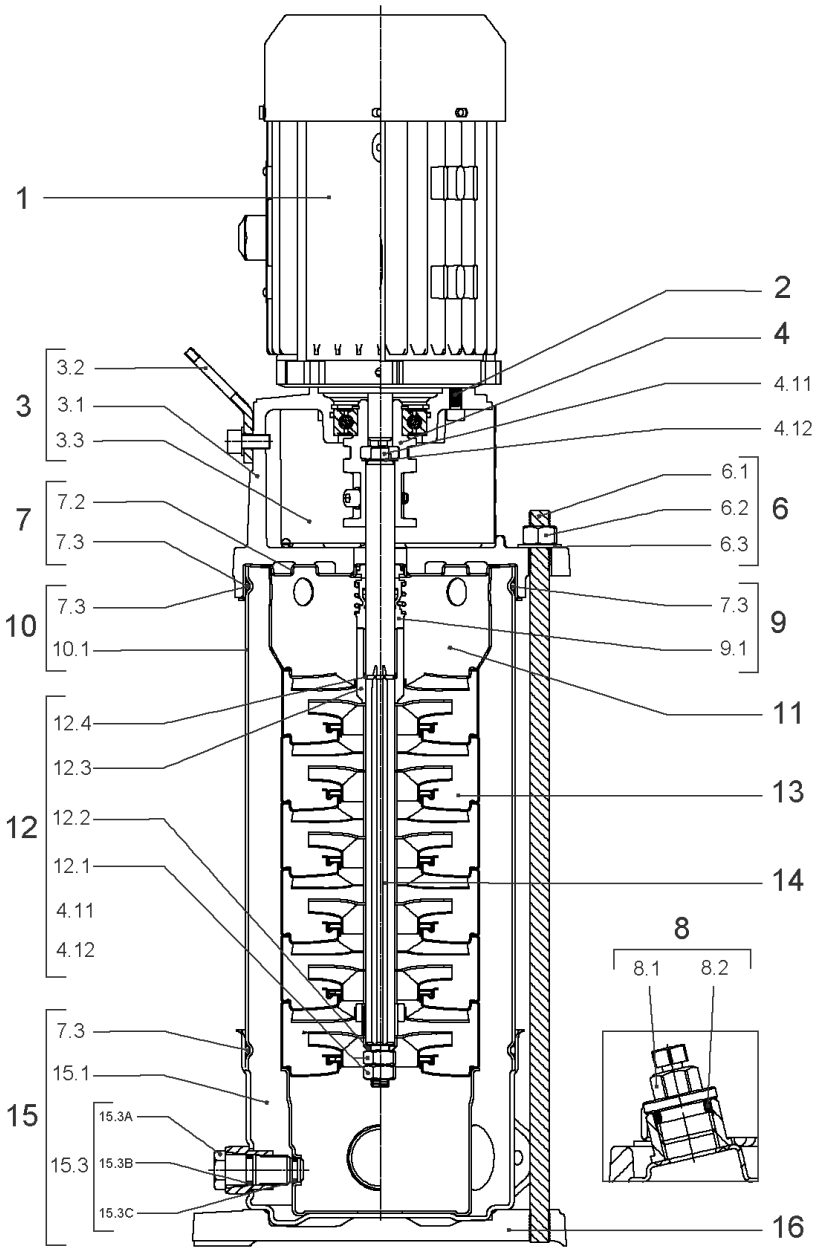
1
2
4
4.11
4.12
3
3.2
3.1
3.3
7
7.2
7.3
10
7.3
10.1
6
6.1
6.2
6.3
9
7.3
9.1
11
12
12.4
12.3
12.2
12.1
4.11
4.12
13
14
8
8.1
8.2
15
7.3
15.1
15.3
15.3A
15.3B
15.3C
16

## HELIX VE204-1/16/E/S (4201563)

| Item | Article no. | Description | Quantity |
|---|---|---|---|
| 1 | | DRIVE HELIX-VE204-IE4-WE KIT | 1 |
| Note: MOTOR BRAND WILO ELEC | | | |
| | | SPARE PARTS MOTOR:ON REQUEST | 1 |
| 2 | 4212716 | SCREW M6X20 KIT (4PIECES) | 1 |
| 3 | 4213715 | LANTERN FT85 HELIX KIT | 1 |
| 3.1 | | > LANT-MOT-VMI-ReDTC6"-FT85-MACHINED+CATA | 1 |
| 3.2 | 4184852 | > EYELET CPL.FT HELIX (2 PIECES) | 1 |
| 3.3 | 4213713 | > COUPLING PROTECTOR FT85/100 HELIX KIT | 1 |
| 4 | 4212718 | COUPLING HELIX D12 FT85 KIT | 1 |
| 6 | 2018368 | STUD BOLT M12X289 KIT | 1 |
| 6.1 | | > TIE BOLT M12-289x18x30-1.4057 | 1 |
| 6.2 | 2094647 | > NUT M12 M12 ISO4032 VP. | 1 |
| 6.3 | 2123557 | > WASHER CS-12.4-24-1.6-NFE25 (4 PIECES) | 1 |
| 7 | 4212722 | STATIONARY RING HOLDER HELIX D23 ReDTC | 1 |
| 7.2 | 4212720 | > STATIONARY RING HOLDER HELIX D23 VP. | 1 |
| 7.3 | 4176513 | > O-RING FOR PUMP JACKET VP. | 1 |
| 8 | 4212724 | FILING/PURGING PLUG HELIX ReDTC KIT | 1 |
| 8.1 | | > FILLING PLUG MVI6"-304 | 1 |
| 8.2 | 4177800 | > O-RING EPDM PLUG HELIX VP. | 1 |
| 9 | 4212726 | MECH.SEAL HELIX V2/4 O/E ReDTC KIT | 1 |
| 9.1 | 4178563 | > M.SEAL.HELIX2-4 O/E VP. | 1 |
| 7.3 | 4176513 | > O-RING FOR PUMP JACKET VP. | 1 |
| 10 | 2127574 | HOUSING PIPE D.152x160 1.4301 KIT | 1 |
| 7.3 | 4176513 | > O-RING FOR PUMP JACKET VP. | 1 |
| 10.1 | | > HOUSING-PIPE Ø152-M+1601/02-304 | 1 |
| 11 | 4179315 | CENTERING STAGE HELIX V2 1.4307 VP. | 1 |
| 12 | 4212729 | SHAFT EQUIPMENT HELIX V2/4 ReDTC KIT | 1 |
| 12.1 | | > NUT-H-M8-STAINLESS-STEEL A4-70 | 1 |
| 12.2 | | > SHAFT END WASHER Ø8/Ø12 316L | 1 |
| 12.3 | | > 1/2-SNAP-RING-2/4M3-316L | 1 |
| 12.4 | | > STOP-RUSH-1/2-D12xd2-M+316 | 1 |
| 4.11 | | > SCREW CHC-M6X14-8.8-ISO4762-GEOMET500A | 1 |
| 4.12 | | > WASHER D.24 L6U ZINK | 1 |
| 13 | | HYDRAULIC HELIX V 204 1.4307 | 1 |

| Item | Article no. | Description | Quantity |
|---|---|---|---|
| 14 | 4213744 | SHAFT D.12X231 HELIX 1.4057 VP. | 1 |
| 15 | 4174079 | PUMP HOUSING HELIX DN32 PN16 1.4301 KIT | 1 |
| 7.3 | 4176513 | > O-RING FOR PUMP JACKET VP. | 1 |
| 15.1 | | > BLASTING PPE HOUSING V-PN16-DN32-5"-304 | 1 |
| 15.2 | 4217889 | > COUNTER FLANGE-G1"-PN16-GJL KIT | 1 |
| 15.3 | 4171321 | > PRIMING/DRAIN PLUG EPDM HELIX KIT | 1 |
| 16 | 4177964 | BASEPLATE HELIX V2/4/6 PN16 VP. | 1 |

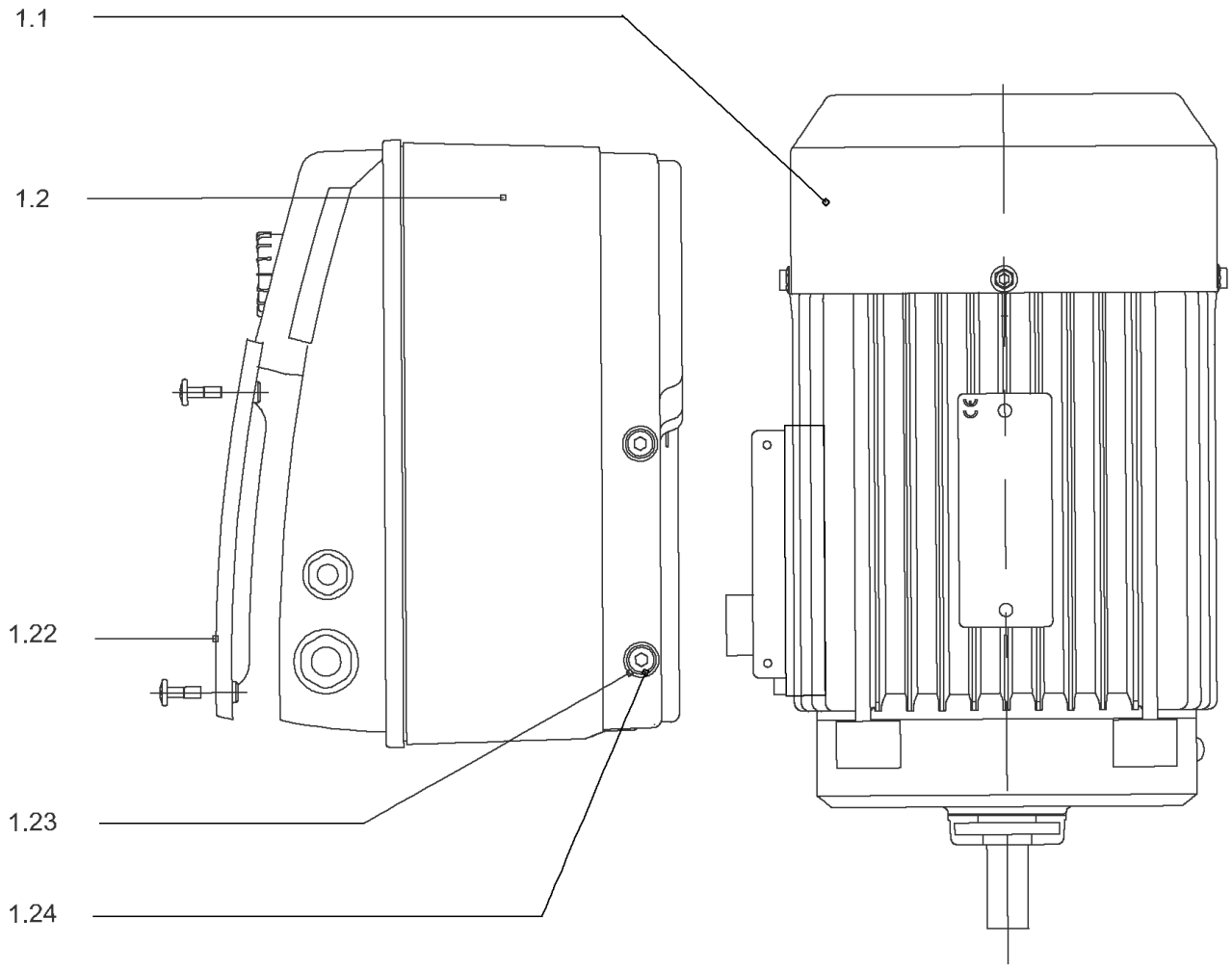
1.1
1.2
1.22
1.23
1.24

## DRIVE HELIX-VE204-IE4-WE KIT

| Item | Article no. | Description | Quantity |
|---|---|---|---|
| 1.1 | 4207912 | MOTOR 0.55/2/71 3~ 380V 60HZ IE4 WE VP. | 1 |
| | | SPARE PARTS MOTOR:ON REQUEST | 1 |
| 1.2 | 4209318 | MODULE HELIX-VE204-IE4-WE KIT | 1 |
| 1.22 | 2054372 | > MODULE COVER TL1,TL2+GASKET KIT | 1 |
| 1.23 | 4215716 | > SCREW M5X16 DIN912 8.8 A2A (4pieces) VP. | 1 |
| 1.24 | 2057978 | > RONDELLE A5,3 DIN6797 FST ZN (4 PIECES) | 1 |

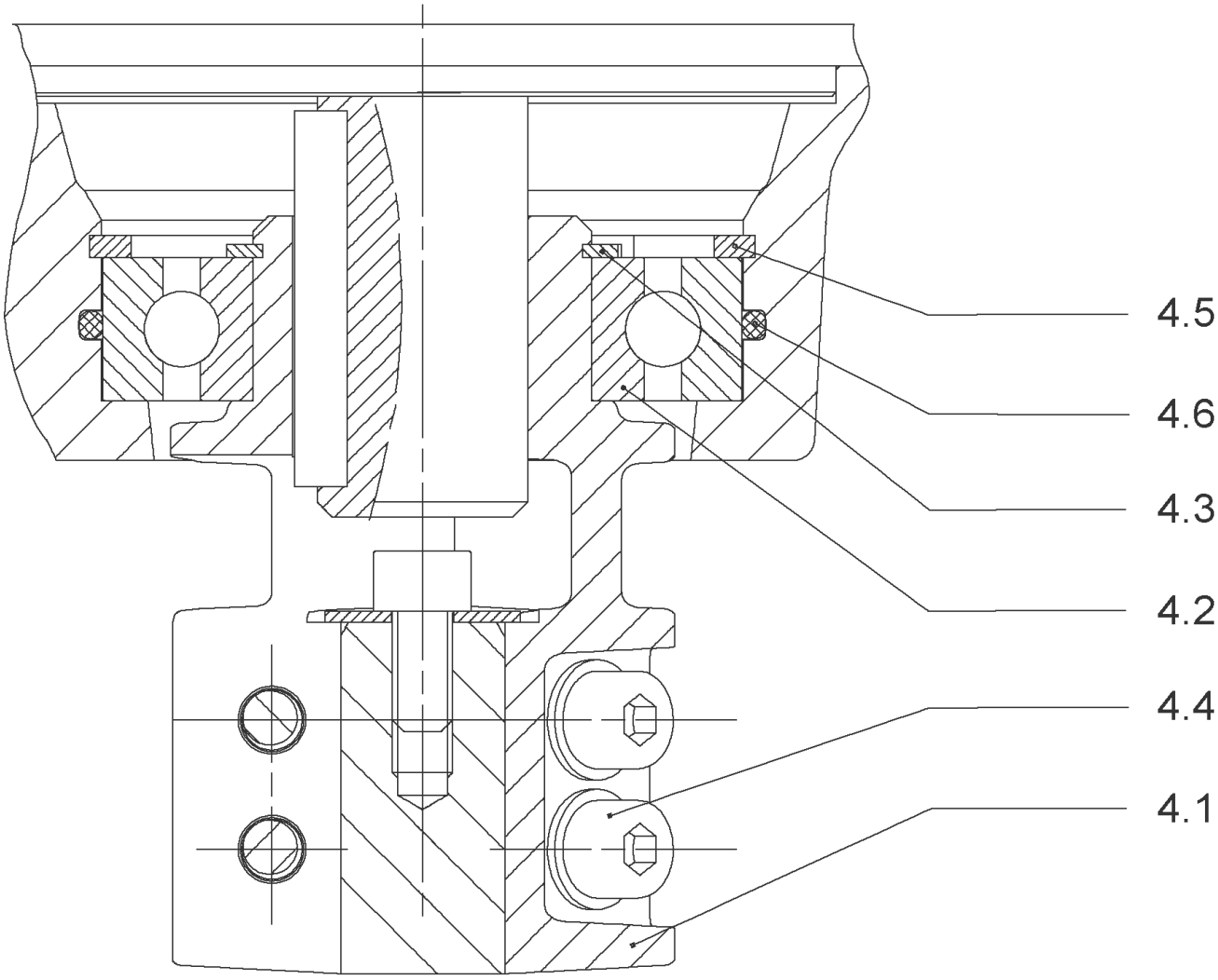
4.5
4.6
4.3
4.2
4.4
4.1

## COUPLING HELIX D12 FT85 KIT (4212718)

| Item | Article no. | Description | Quantity |
|---|---|---|---|
| 4.1 | | COUPLING-VMI-Ø12xØ14-FT85-USINE | 1 |
| 4.2 | 4177802 | BALL BEARING 6205C3-ZZ HTVP. | 1 |
| 4.3 | 4208923 | CIRCLIP D25X1.2 VP. | 1 |
| 4.4 | 4212716 | SCREW M6X20 KIT (4PIECES) | 1 |
| 4.5 | 4233124 | CIRCLIP-FOR-BORES-D52x2 VP. | 1 |
| 4.6 | 4234244 | O-RING 52X2 VP. | 1 |
| | | CONTACT-WASHER-6ETR-6,1x12,2x1,8-STEEL | 1 |

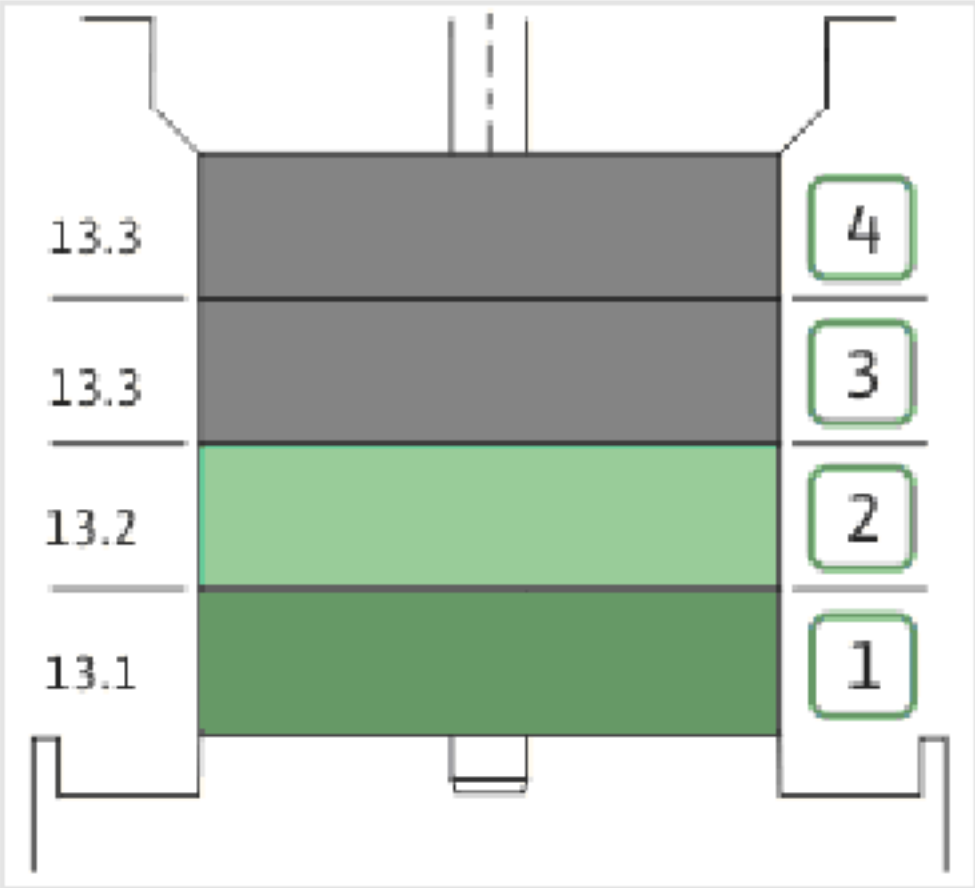
13.3
13.3
13.2
13.1
4
3
2
1

| Item | Article no. | Description | Quantity |
|---|---|---|---|
| 13.1 | 4179316 | STAGE HELIX 2 1.4301 KIT | 1 |
| | | > MACH.STG-CASING-WOGV-WNR-M+2-4-304 | 1 |
| | | > IMPELLER-M+2-304 | 1 |
| 13.2 | 4179317 | STAGE BEARING HELIX 2 1.4307 KIT | 1 |
| | | > MACH.BEARING-STG-CASING-WNR-M+2-304 | 1 |
| | | > IMPELLER-M+2-304 | 1 |
| | | > SHAFT SLEEVE SPACER Ø15,35x10,305-304 | 1 |
| | | > SHAFT-SLEEVE-D12xD16x14-CW | 1 |
| 13.3 | 4179319 | INTERMEDIATE STAGE HELIX 2 1.4301 KIT | 1 |
| | | > CORPS-ETG-STD-ACR-AJR-USIN.M+2-304 | 1 |
| | | > IMPELLER-M+2-304 | 1 |
| | | > IMPELLER SPACER Ø12,05X14,85-L24,285-304 | 1 |

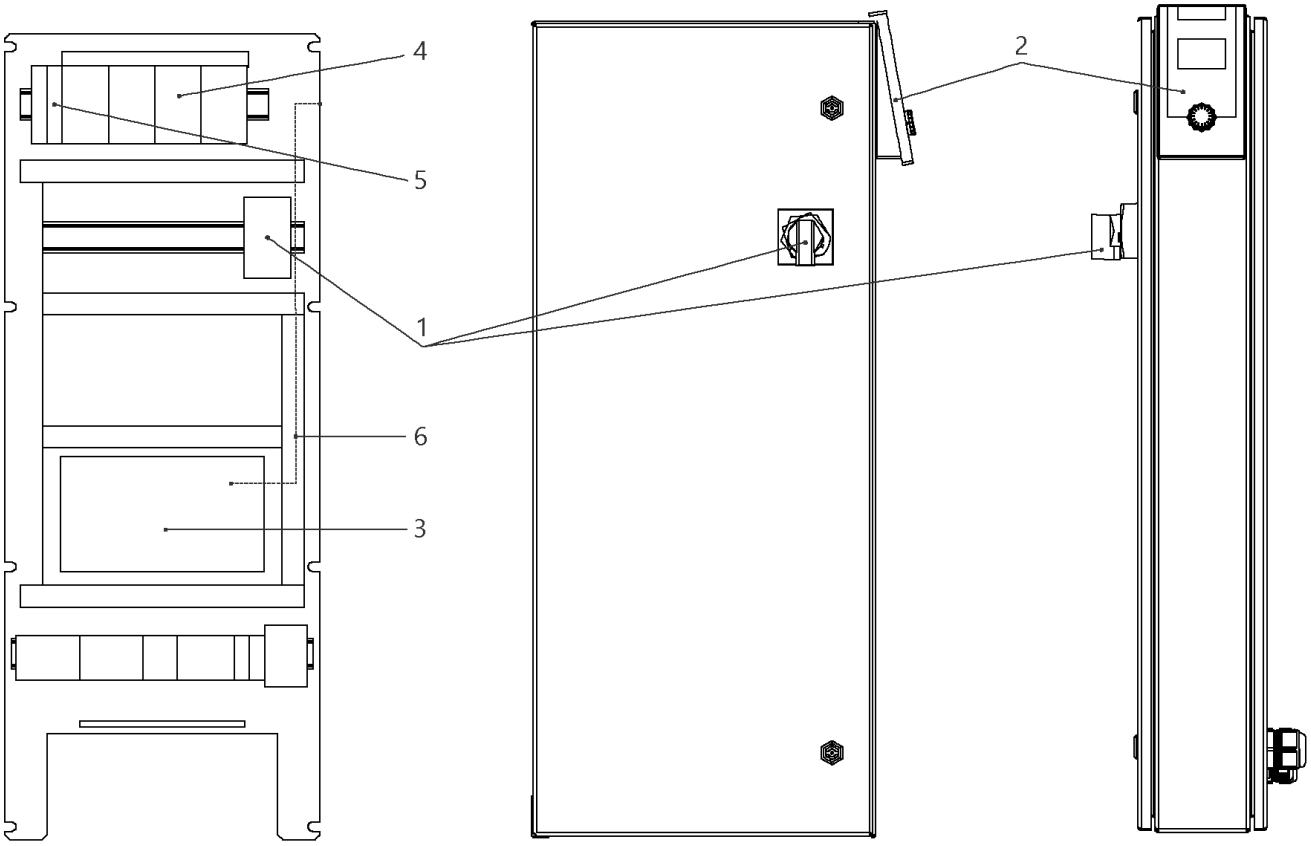
4
5
1
6
3
2

## W-CTRL-SCE-B-4x10A-T34-FM-ND1-AVC-PKG (2541915)

| Item | Article no. | Description | Quantity |
|---|---|---|---|
| 1 | 2104473 | MAIN SWITCH OT63F3 L105 KIT | 1 |
| 2 | 4184784 | CONTROL PANEL HMI SC KIT | 1 |
| 2 | 4185259 | ASSEMBLY DISPLAY SC PKG VP. | 1 |
| Note: DISPLAY ALONE / PLATINE SEULE | | | |
| 3 | 4185257 | ASSEMBLY CPU SCe Booster VP. | 1 |
| 5 | 2046288 | CIRCUIT BREAKER S201 B16 | 1 |
| 4 | 2119861 | AUTOMATIC CIRCUIT BREAKER S203 B13 3POL. | 1 |
| 6 | 4197081 | CABLE RJ45 CAT6 0,5M RED SC-PANEL VP. | 1 |

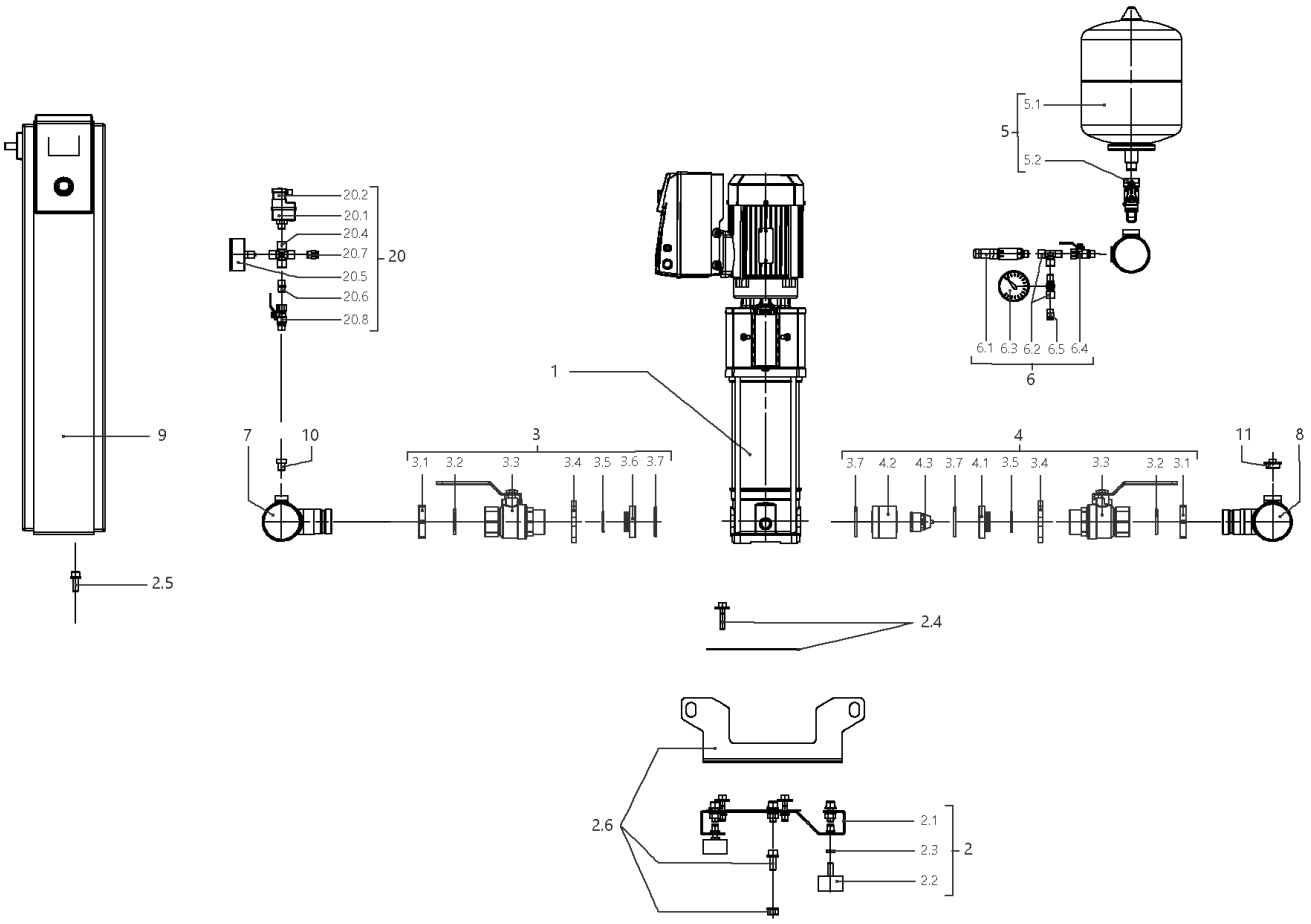
5.1
5
5.2
20.2
20.1
20.4
20.7
20
20.5
20.6
20.8
6.1 6.3 6.2 6.5 6.4
6
1
9
7
10
3
3.1 3.2 3.3 3.4 3.5 3.6 3.7
4
3.7 4.2 4.3 3.7 4.1 3.5 3.4 3.3 3.2 3.1
11
8
2.5
2.4
2.6
2.1
2.3
2
2.2

## SiBoost Smart 4HELIX VE206 (2541593)

| Item | Article no. | Description | Quantity |
|---|---|---|---|
| 1 | | HELIX VE206-1/16/E/S | 1 |
| Note: TO / BIS / JUSQU'AU 29/02/2016 | | | |
| 1 | 4201564 | HELIX VE206-1/16/E/S | 1 |
| Note: FROM / AB / À PARTIR DU 01/03/2016 | | | |
| 2 | 4200143 | BASE PLATE DE4 1450x300 KIT | 1 |
| 2.1 | | > BASEPLATE_4x4/6/10V_E300_1450x300BOX_150 | 1 |
| 2.2 | 2028654 | > VIBRATION DAMPER D.50X30 M10X28 | 1 |
| 2.3 | 2028281 | > NUT M10 DIN936 (ISO4035) 17H VZ | 1 |
| 2.4 | 4199875 | > HOLDER PUMP Siboost Helix V2/4 KIT | 1 |
| 2.5 | 4197084 | > HOLDER SWITCHBOX WILO Smart Control KIT | 1 |
| 2.6 | 4197085 | > LIFTING Siboost HELIX SC KIT | 1 |
| 3 | 4199876 | SUCTION SIDE Siboost Helix V2/4/6 KIT | 1 |
| 3.1 | 2032610 | > NUT G11/4 MS VP. | 1 |
| 3.2 | 2032611 | > O-RING ID.36,09X3,53N DIN3771 E7502 | 1 |
| 3.3 | 2507646 | > BALL VALVE G11/4"M-F-W.HANDLE 1/4-TURN | 1 |
| 3.4 | 2032613 | > SCREWED FLANGE G1 1/4" LK-75 ST37VZ | 1 |
| 3.5 | 2032614 | > O-RING ID.29,82X2,62N DIN3771 E7502 | 1 |
| 3.6 | 2032615 | > SPACER F.I/A KUH.DN32 CUZN | 1 |
| 3.7 | 2032616 | > O-RING ID.44X3,53N DIN3771 E7502 | 1 |
| 4 | 4199877 | DELIVERY SIDE Siboost Helix V2/4/6 KIT | 1 |
| 3.1 | 2032610 | > NUT G11/4 MS VP. | 1 |
| 3.2 | 2032611 | > O-RING ID.36,09X3,53N DIN3771 E7502 | 1 |
| 3.3 | 2507646 | > BALL VALVE G11/4"M-F-W.HANDLE 1/4-TURN | 1 |
| 3.4 | 2032613 | > SCREWED FLANGE G1 1/4" LK-75 ST37VZ | 1 |
| 3.5 | 2032614 | > O-RING ID.29,82X2,62N DIN3771 E7502 | 1 |
| 4.1 | 2058116 | > SPACER F.I/A KUH.DN32 CUZN | 1 |
| 3.7 | 2032616 | > O-RING ID.44X3,53N DIN3771 E7502 | 1 |
| 4.2 | 2058115 | > HOUSING RFV(RV-IN) DN32 SGS/DRS | 1 |
| 4.3 | 2027870 | > NON-RETURN-DEVICE INSERT DN32(MTR) | 1 |
| 5 | 2032642 | DIAPHREM TANK 8L/PN16 DIN4807/T5 KIT | 1 |
| 5.1 | 2045914 | > DIAPHREM TANK 8L TYP-DD 16BAR | 1 |
| 5.2 | 2027853 | > FLOW FITTING G3/4 FOR DIAPHRAGM VES. | 1 |
| 6 | 4197076 | PRESSURE SENSOR/ GAUGE 0-16BAR KIT | 1 |
| 6.1 | 2085909 | > PRESS.SENSOR 1/4" 0-16BAR 4-20MA VP. | 1 |

| Item | Article no. | Description | Quantity |
|---|---|---|---|
| 6.2 | 4197077 | > T-PIECE 1/4" VP. | 1 |
| 6.3 | 2028692 | > PRESSURE GAUGE NG63-PN16-G1/4 | 1 |
| 6.4 | 2028291 | > BALL TAP R1/4" PN42 GIACOMINI R254DL | 1 |
| 6.5 | 2028691 | > BLOWGUN 1/4" MS 30BAR VP. | 1 |
| 7 | 4225310 | PIPE-2"-4x11/4-E300-2x1/4x1200 VP. | 1 |
| 8 | 4225311 | PIPE-2"-4x11/4-E300-2x1/4-1x3/4x1200 VP. | 1 |
| 9 | 2541915 | W-CTRL-SCE-B-4x10A-T34-FM-ND1-AVC-PKG | 1 |
| 10 | 4197079 | PLUG G1/4"x10 AISI304 KIT | 1 |
| 11 | 2032654 | PLUG R3/4" MS VIEGA 1751 | 1 |
| 20 | | ASSEMBLY WMS. DE-EB. +VP | 1 |
| 20.1 | 2028652 | > PRESSURE SWITCH PS3-ASR 1/(1,3) VP. | 1 |
| 20.2 | 2130983 | > PLUG PS3-415 WITH KABEL 1,5M 2NO VP. | 1 |
| 20.4 | 2028290 | > CROSSPIECE R1/4" MS-NICKEL | 1 |
| 20.5 | 2028687 | > PRESSURE GAUGE NG63 R1/4" HI.0-6BAR | 1 |
| 20.6 | 2054268 | > DUAL NIPPLE G1/4" x G1/4" MS VP. | 1 |
| 20.7 | 2028691 | > BLOWGUN 1/4" MS 30BAR VP. | 1 |
| 20.8 | 2028291 | > BALL TAP R1/4" PN42 GIACOMINI R254DL | 1 |

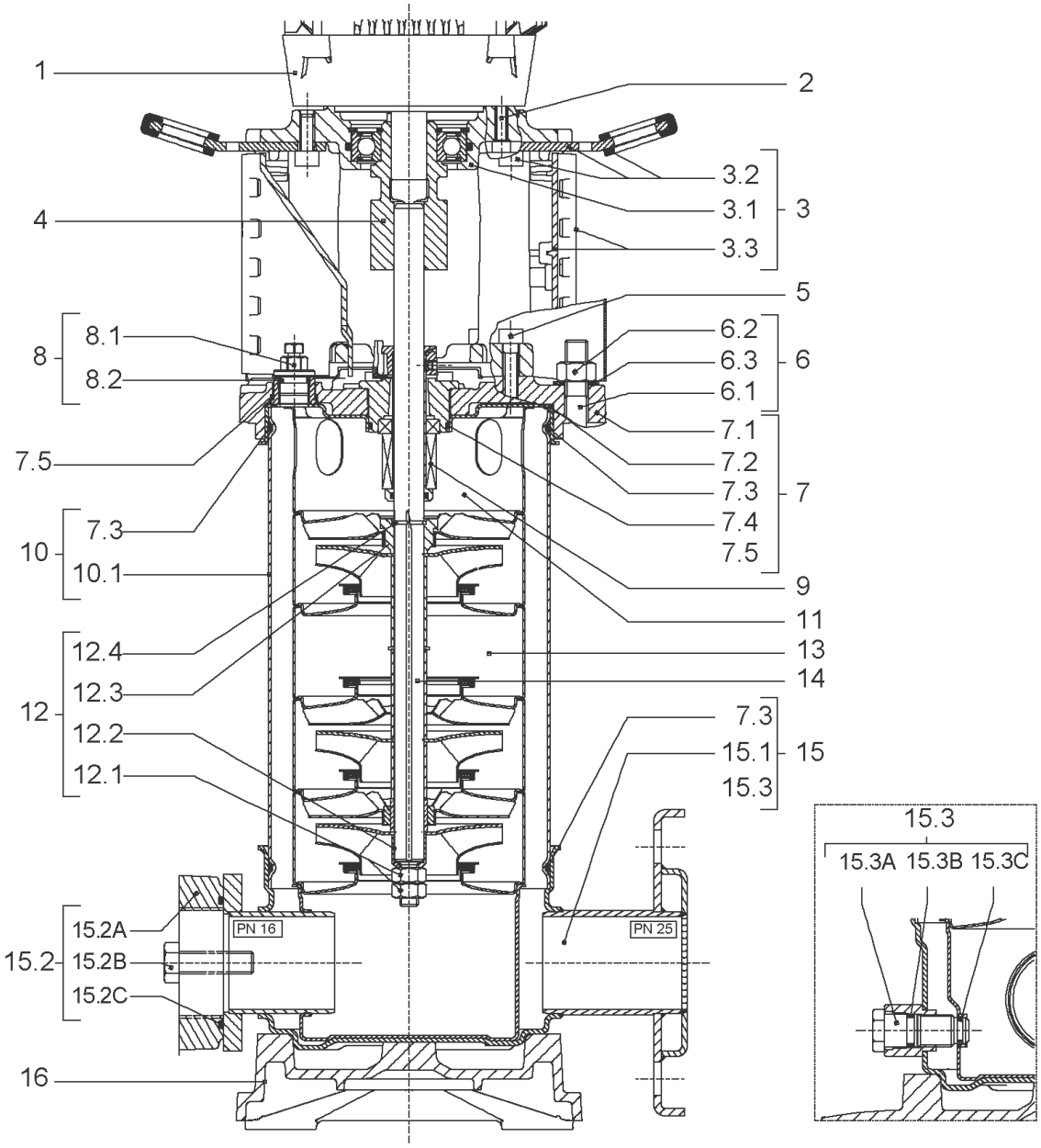
1
2
3.2
3.1
3
3.3
4
5
8.1
8
8.2
6.2
6.3
6
6.1
7.1
7.5
7.2
7.3
7
7.4
7.3
10
7.5
10.1
9
11
12.4
13
12.3
14
12
12.2
7.3
15.1
15
12.1
15.3
15.3
15.3A 15.3B 15.3C
15.2A
PN 16
PN 25
15.2
15.2B
15.2C
16

| Item | Article no. | Description | Quantity |
|---|---|---|---|
| 1 | | DRIVE HELIX-VE206-IE2-WE KIT | 1 |
| Note: MOTOR BRAND WILO ELEC | | | |
| 1 | | DRIVE HELIX-VE206-IE4-WE KIT | 1 |
| Note: MOTOR BRAND WILO ELEC | | | |
| 2 | 4159702 | SCREW M6X30 (4 PIECES) | 1 |
| 3 | 4172790 | EQUIPED LANTERN NEXIS FT 100 KIT | 1 |
| 3.1 | | > M+5_6_LANTERN_ONE-PIECE_FT100_CATA | 1 |
| 3.2 | 2127604 | > EYELET CPL.FT HELIX(2 PIECES) | 1 |
| 3.3 | 4159692 | > COUPLING PROTECTOR FT HELIX KIT | 1 |
| 4 | 4178578 | COUPLING D.12XD.19 FT100 KIT | 1 |
| 5 | 4159707 | SCREW M8X30 (4 PIECES) | 1 |
| 6 | 4177817 | STUD BOLT M12X341 KIT | 1 |
| 6.1 | | > TIE BOLT M12-341x18x30-1.4057 | 1 |
| 6.2 | 2094647 | > NUT M12 M12 ISO4032 VP. | 1 |
| 6.3 | 2123557 | > WASHER CS-12.4-24-1.6-NFE25 (4 PIECES) | 1 |
| 7 | 4210143 | STATIONARY RING HOLDER HELIX 6" EPDM | 1 |
| 7.2 | 2127607 | > STATIONARY RING HOLDER 6" HELIX 1.4301 V | 1 |
| 7.3 | 4176513 | > O-RING FOR PUMP JACKET VP. | 1 |
| 7.4 | 2127603 | > O-RING ID.37,6x2,4 EPDM VP. | 1 |
| 7.5 | 2127602 | > O-RING ID.21,35x2 EPDM VP. | 1 |
| 8 | 4159686 | FILING/PURGING PLUG HELIX EPDM KIT | 1 |
| 9 | 4178564 | SEAL-KIT-HELIX2-4 O/E KIT | 1 |
| 10 | 4177818 | HOUSING PIPES Ø152-M+1004-304 KIT | 1 |
| 7.3 | 4176513 | > O-RING FOR PUMP JACKET VP. | 1 |
| 10.1 | | > HOUSING-PIPE Ø152-M+1004/1603-304 | 1 |
| 11 | 4179315 | CENTERING STAGE HELIX V2 1.4307 VP. | 1 |
| 12 | 4178568 | SHAFT EQUIPMENT HELIX V2/V4 KIT | 1 |
| 12.1 | | > NUT-H-M8-STAINLESS-STEEL A4-70 | 2 |
| 12.2 | | > SHAFT END WASHER Ø8/Ø12 316L | 1 |
| 12.3 | | > STOP COLLAR OF IMPELLER M+2/4 SINGLEBLOC | 1 |
| 12.4 | | > STOP-RUSH-1/2-D12xd2-M+316 | 2 |
| 13 | | HYDRAULIC HELIX V 206 1.4307 | 1 |
| 14 | 4178584 | SHAFT D.12X333 1.4301 VP. | 1 |
| 15 | 4174079 | PUMP HOUSING HELIX DN32 PN16 1.4301 KIT | 1 |

| Item | Article no. | Description | Quantity |
|---|---|---|---|
| 7.3 | 4176513 | > O-RING FOR PUMP JACKET VP. | 1 |
| 15.1 | | > BLASTING PPE HOUSING V-PN16-DN32-5"-304 | 1 |
| 15.2 | 4217889 | > COUNTER FLANGE-G1"-PN16-GJL KIT | 1 |
| 15.3 | 4171321 | > PRIMING/DRAIN PLUG EPDM HELIX KIT | 1 |
| 16 | 4177964 | BASEPLATE HELIX V2/4/6 PN16 VP. | 1 |

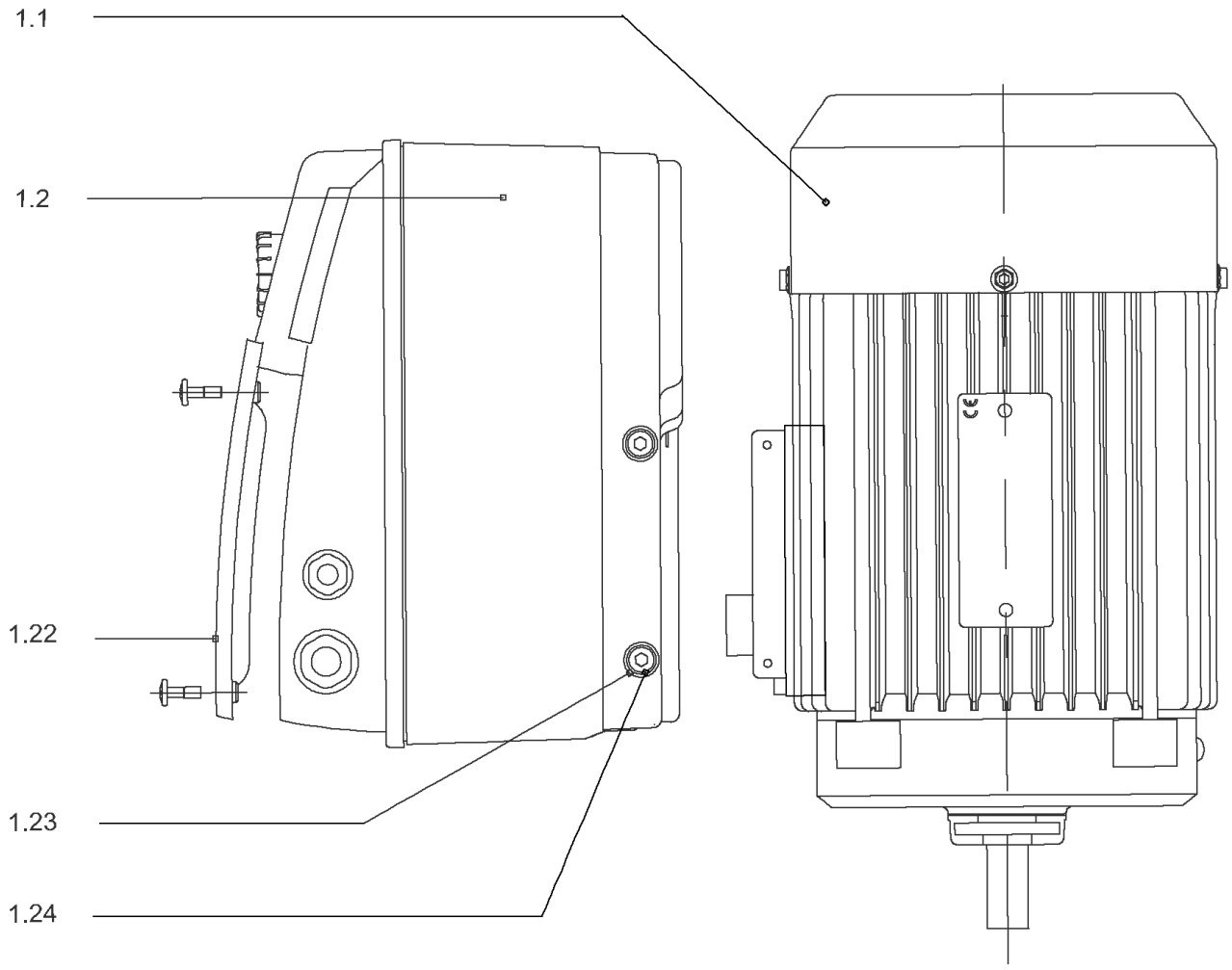
1.1
1.2
1.22
1.23
1.24

## DRIVE HELIX-VE206-IE2-WE KIT

| Item | Article no. | Description | Quantity |
|---|---|---|---|
| 1.1 | | MOTOR 0,75/2/80 3~ 380V 60HZ IE2 WE VP. | 1 |
| Note: no longer available/nicht mehrlieferbar/n'est plus disponible | | | |
| | | SPARE PARTS MOTOR:ON REQUEST | 1 |
| 1.2 | 4184863 | MODULE HELIX-VE206-IE2-WE KIT | 1 |
| 1.22 | 2054372 | > MODULE COVER TL1,TL2+GASKET KIT | 1 |
| 1.23 | 4215716 | > SCREW M5X16 DIN912 8.8 A2A (4pieces) VP. | 1 |
| 1.24 | 2057978 | > RONDELLE A5,3 DIN6797 FST ZN (4 PIECES) | 1 |

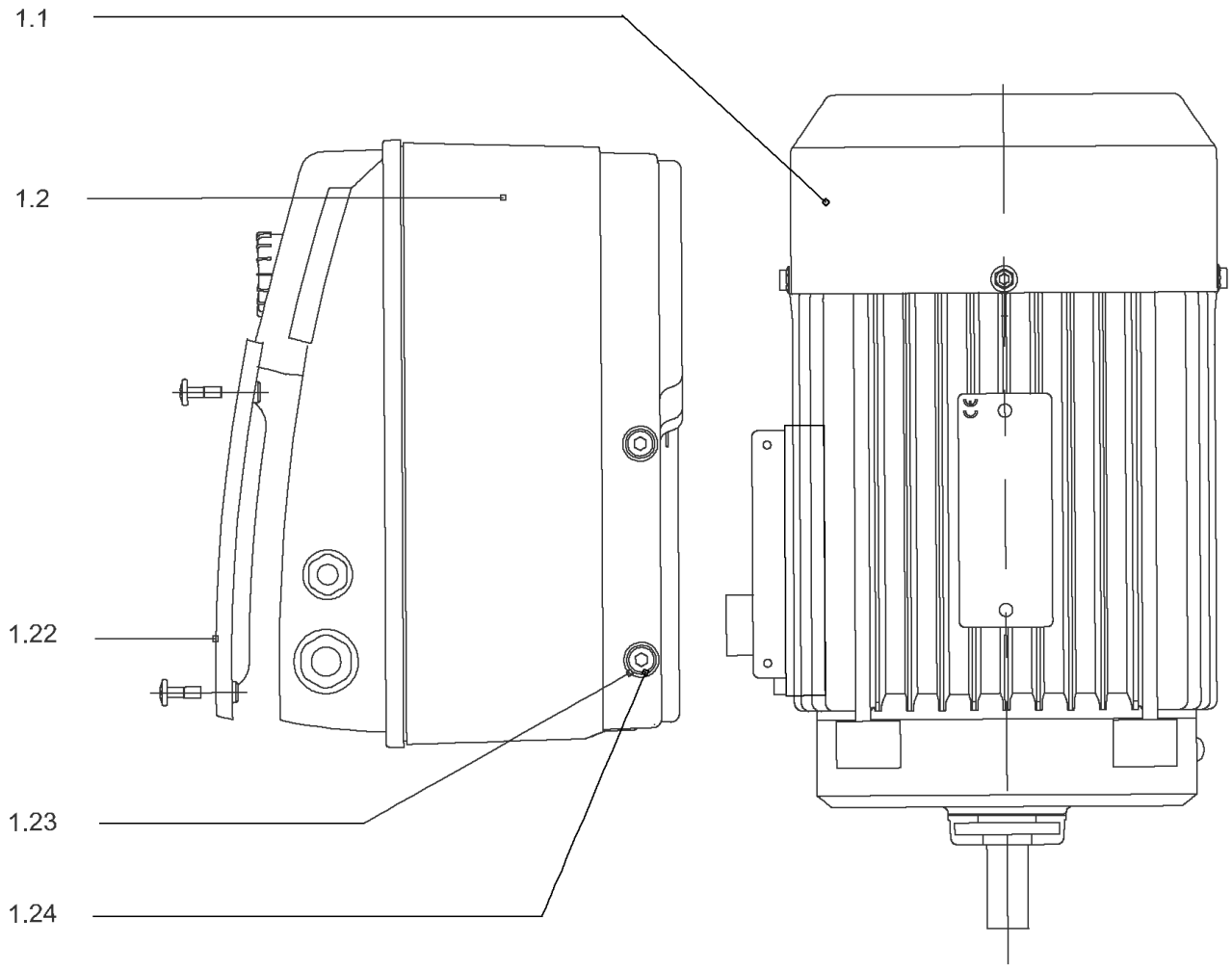
1.1
1.2
1.22
1.23
1.24

## DRIVE HELIX-VE206-IE4-WE KIT

| Item | Article no. | Description | Quantity |
|---|---|---|---|
| 1.1 | 4207914 | MOTOR 0.75/2/80 3~ 380V 60HZ IE4 WE VP. | 1 |
| | | SPARE PARTS MOTOR:ON REQUEST | 1 |
| 1.2 | 4209321 | MODULE HELIX-VE206-IE4-WE KIT | 1 |
| 1.22 | 2054372 | > MODULE COVER TL1,TL2+GASKET KIT | 1 |
| 1.23 | 4215716 | > SCREW M5X16 DIN912 8.8 A2A (4pieces) VP. | 1 |
| 1.24 | 2057978 | > RONDELLE A5,3 DIN6797 FST ZN (4 PIECES) | 1 |

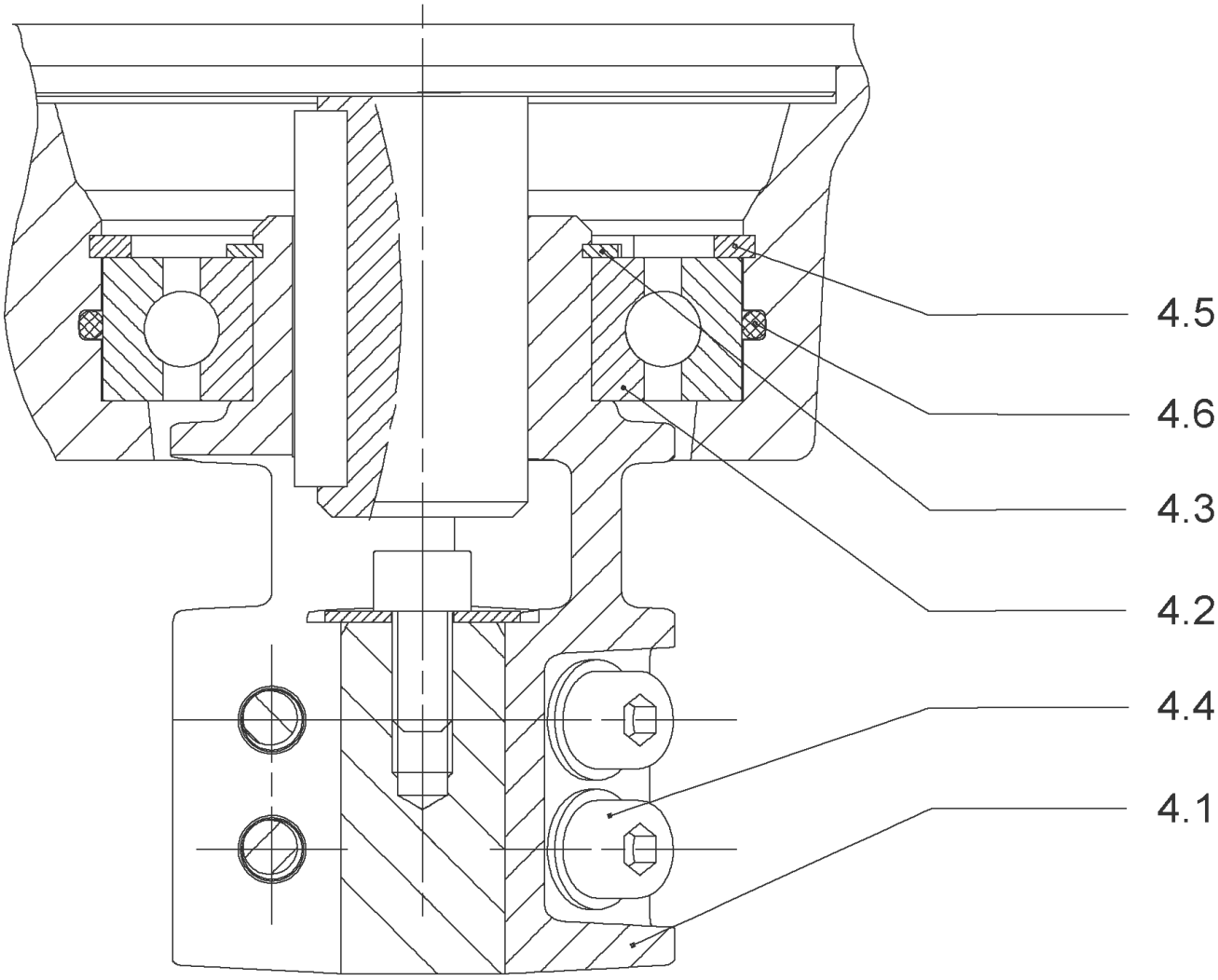
4.5
4.6
4.3
4.2
4.4
4.1

## COUPLING D.12XD.19 FT100 KIT (4178578)

| Item | Article no. | Description | Quantity |
|---|---|---|---|
| 4.1 | | COUPLING-M+ Ø12XØ19-FT100-MACHINED | 1 |
| 4.3 | 4234249 | CIRCLIP-FOR-SHAFT-D30x1.5 VP. | 1 |
| 4.2 | 2130977 | BALL BEARING 6206/ZZ-C3(HT)VP. | 1 |
| 4.4 | 4212716 | SCREW M6X20 KIT (4PIECES) | 1 |
| 4.5 | 4234250 | CIRCLIP-D62x2 VP. | 1 |
| 4.6 | 4234245 | O-RING 63X3 VP. | 1 |
| | | CONTACT-WASHER-6ETR-6,1x12,2x1,8-STEEL | 4 |

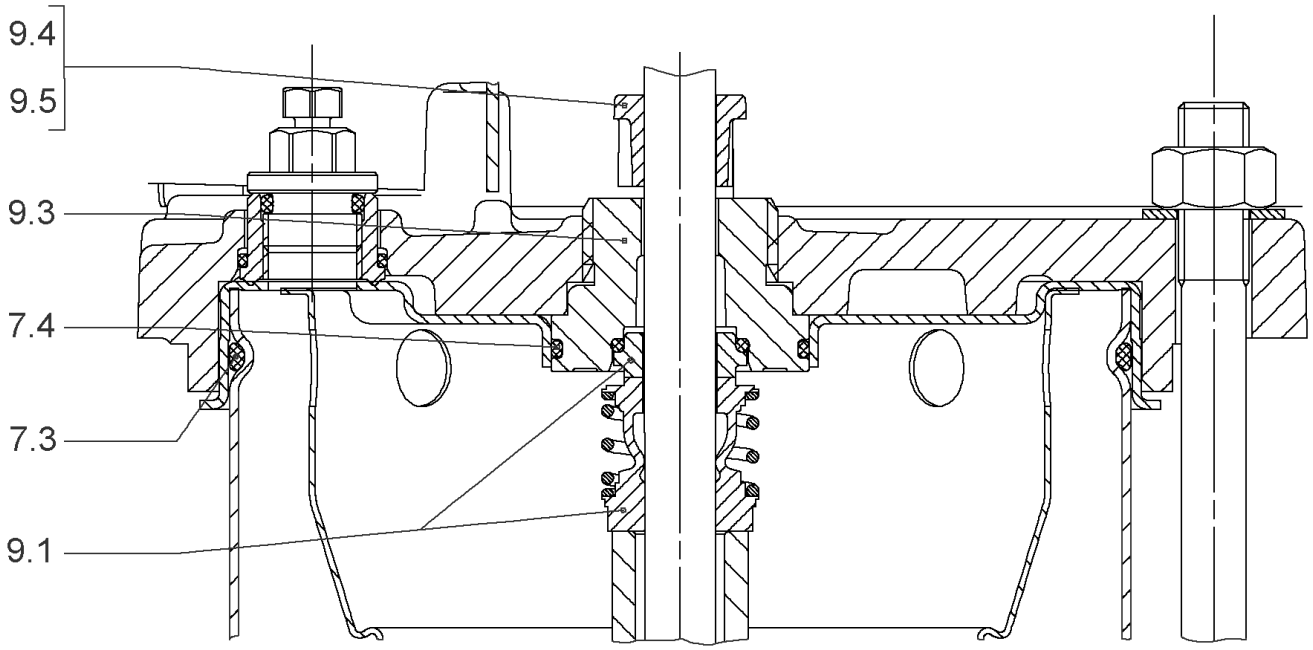
9.4
9.5
9.3
7.4
7.3
9.1

## SEAL-KIT-HELIX2-4 O/E KIT (4178564)

| Item | Article no. | Description | Quantity |
|---|---|---|---|
| 7.3 | 4176513 | O-RING FOR PUMP JACKET VP. | 1 |
| 7.4 | 2127603 | O-RING ID.37,6x2,4 EPDM VP. | 1 |
| 9.1 | 4178563 | M.SEAL.HELIX2-4 O/E VP. | 1 |
| 9.3 | 4178561 | RING HOLDER Ø22 1.4301 VP. | 1 |
| 9.5 | 4178562 | DRIVE RING D.22/12.2X10 MACH.VP. | 1 |
| 9.4 | 4176520 | SCREW CH M5x5 A4-70 ( 3PIECES ) | 1 |

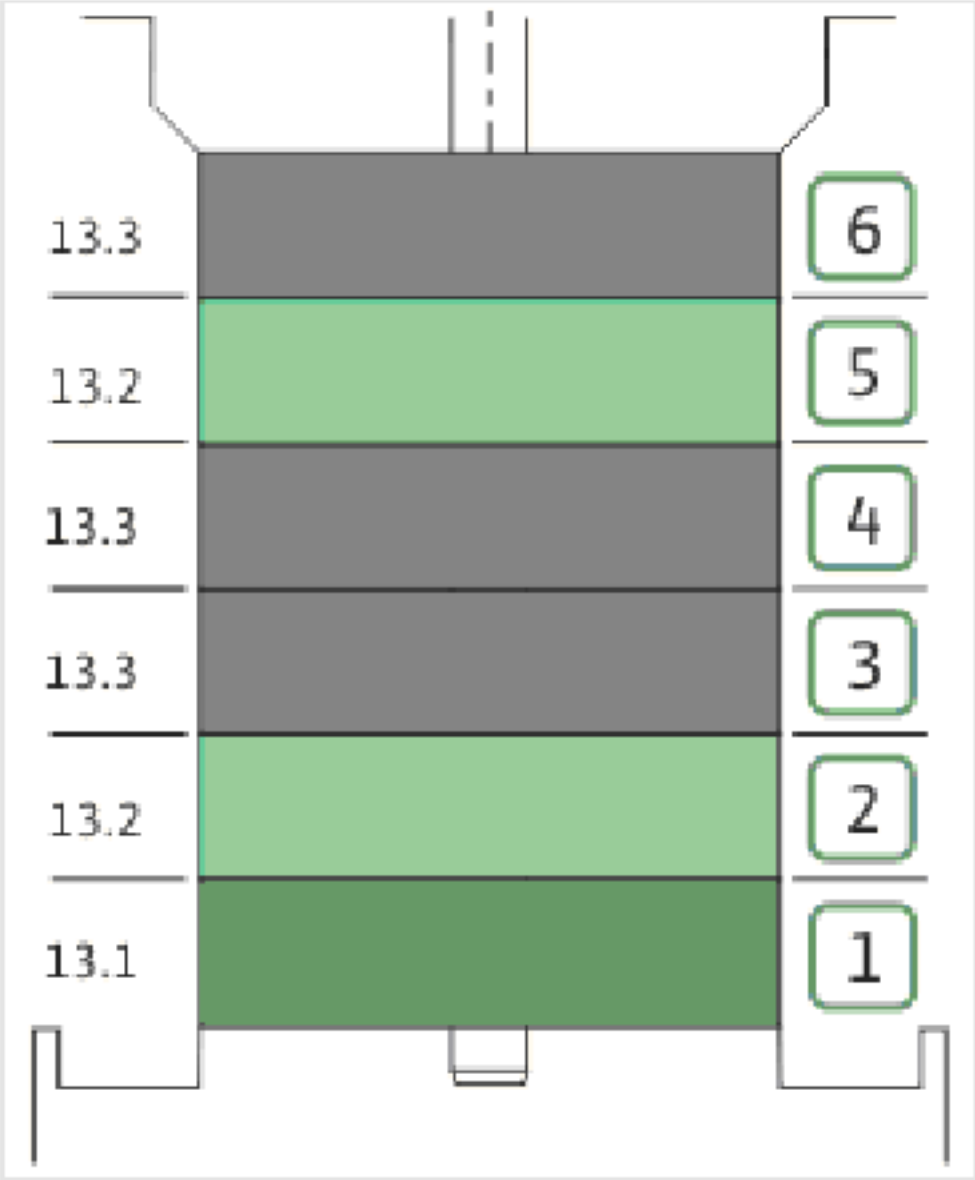
13.3
13.2
13.3
13.3
13.2
13.1
6
5
4
3
2
1

| Item | Article no. | Description | Quantity |
|---|---|---|---|
| 13.1 | 4179316 | STAGE HELIX 2 1.4301 KIT | 1 |
| | | > MACH.STG-CASING-WOGV-WNR-M+2-4-304 | 1 |
| | | > IMPELLER-M+2-304 | 1 |
| 13.2 | 4179317 | STAGE BEARING HELIX 2 1.4307 KIT | 1 |
| | | > MACH.BEARING-STG-CASING-WNR-M+2-304 | 1 |
| | | > IMPELLER-M+2-304 | 1 |
| | | > SHAFT SLEEVE SPACER Ø15,35x10,305-304 | 1 |
| | | > SHAFT-SLEEVE-D12xD16x14-CW | 1 |
| 13.3 | 4179319 | INTERMEDIATE STAGE HELIX 2 1.4301 KIT | 1 |
| | | > CORPS-ETG-STD-ACR-AJR-USIN.M+2-304 | 1 |
| | | > IMPELLER-M+2-304 | 1 |
| | | > IMPELLER SPACER Ø12,05X14,85-L24,285-304 | 1 |

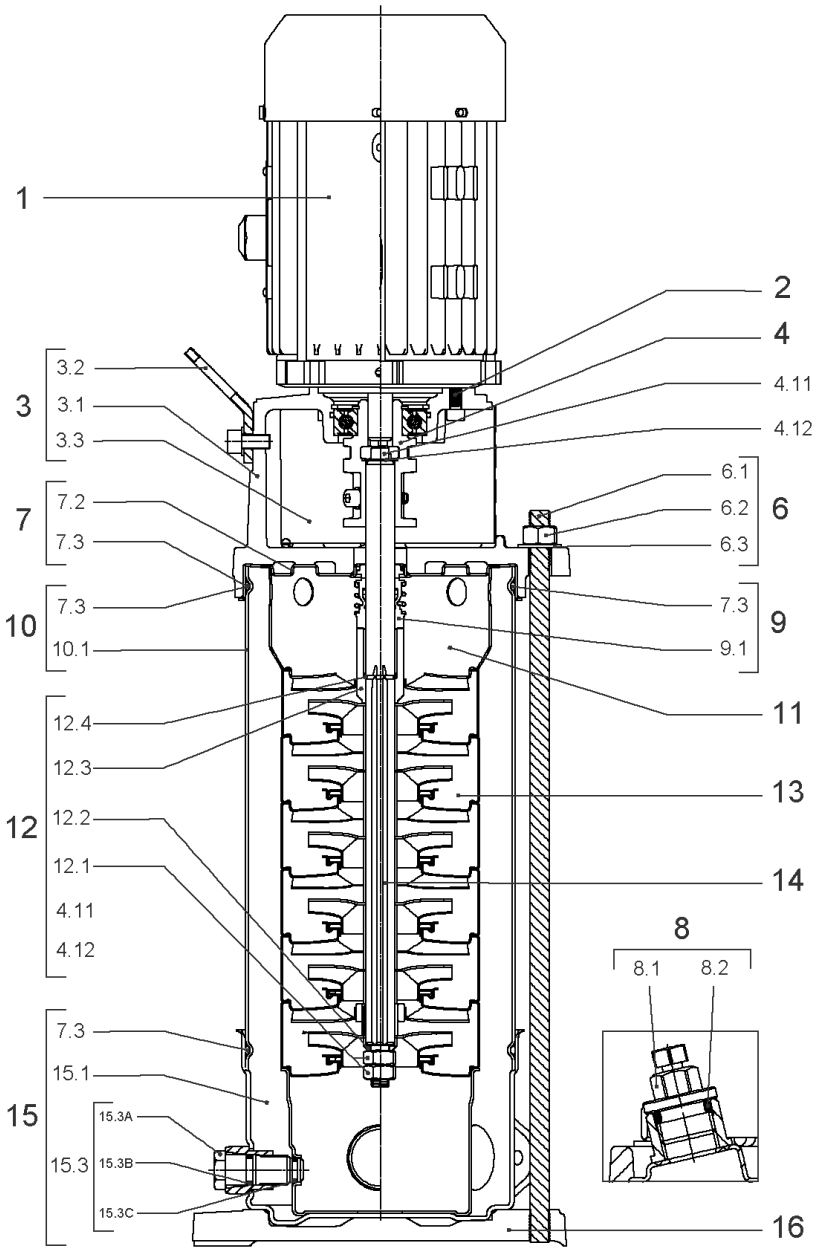
1
2
4
4.11
4.12
3
3.2
3.1
3.3
7
7.2
7.3
6
6.1
6.2
6.3
10
7.3
10.1
9
7.3
9.1
11
12
12.4
12.3
12.2
12.1
4.11
4.12
13
14
8
8.1
8.2
15
7.3
15.1
15.3
15.3A
15.3B
15.3C
16

## HELIX VE206-1/16/E/S (4201564)

| Item | Article no. | Description | Quantity |
|---|---|---|---|
| 1 | | DRIVE HELIX-VE206-IE4-WE KIT | 1 |
| Note: MOTOR BRAND WILO ELEC | | | |
| | | SPARE PARTS MOTOR:ON REQUEST | 1 |
| 2 | 4212716 | SCREW M6X20 KIT (4PIECES) | 1 |
| 3 | 4213752 | LANTERN FT100 HELIX KIT | 1 |
| 3.1 | | > LANT-MOT-VMI-ReDTC6"-FT100-MACHINED+CATA | 1 |
| 3.2 | 4184852 | > EYELET CPL.FT HELIX (2 PIECES) | 1 |
| 3.3 | 4213713 | > COUPLING PROTECTOR FT85/100 HELIX KIT | 1 |
| 4 | 4178578 | COUPLING D.12XD.19 FT100 KIT | 1 |
| 6 | 4177817 | STUD BOLT M12X341 KIT | 1 |
| 6.1 | | > TIE BOLT M12-341x18x30-1.4057 | 1 |
| 6.2 | 2094647 | > NUT M12 M12 ISO4032 VP. | 1 |
| 6.3 | 2123557 | > WASHER CS-12.4-24-1.6-NFE25 (4 PIECES) | 1 |
| 7 | 4212722 | STATIONARY RING HOLDER HELIX D23 ReDTC | 1 |
| 7.2 | 4212720 | > STATIONARY RING HOLDER HELIX D23 VP. | 1 |
| 7.3 | 4176513 | > O-RING FOR PUMP JACKET VP. | 1 |
| 8 | 4212724 | FILING/PURGING PLUG HELIX ReDTC KIT | 1 |
| 8.1 | | > FILLING PLUG MVI6"-304 | 1 |
| 8.2 | 4177800 | > O-RING EPDM PLUG HELIX VP. | 1 |
| 9 | 4212726 | MECH.SEAL HELIX V2/4 O/E ReDTC KIT | 1 |
| 9.1 | 4178563 | > M.SEAL.HELIX2-4 O/E VP. | 1 |
| 7.3 | 4176513 | > O-RING FOR PUMP JACKET VP. | 1 |
| 10 | 2127575 | HOUSING PIPE D.152x210 1.4301 KIT | 1 |
| 11 | 4179315 | CENTERING STAGE HELIX V2 1.4307 VP. | 1 |
| 12 | 4212729 | SHAFT EQUIPMENT HELIX V2/4 ReDTC KIT | 1 |
| 12.1 | | > NUT-H-M8-STAINLESS-STEEL A4-70 | 1 |
| 12.2 | | > SHAFT END WASHER Ø8/Ø12 316L | 1 |
| 12.3 | | > 1/2-SNAP-RING-2/4M3-316L | 1 |
| 12.4 | | > STOP-RUSH-1/2-D12xd2-M+316 | 1 |
| 4.11 | | > SCREW CHC-M6X14-8.8-ISO4762-GEOMET500A | 1 |
| 4.12 | | > WASHER D.24 L6U ZINK | 1 |
| 13 | | HYDRAULIC HELIX V 206 1.4307 | 1 |
| 14 | 4213748 | SHAFT D.12X281 HELIX 1.4057 VP. | 1 |
| 15 | 4174079 | PUMP HOUSING HELIX DN32 PN16 1.4301 KIT | 1 |

| Item | Article no. | Description | Quantity |
|---|---|---|---|
| 7.3 | 4176513 | > O-RING FOR PUMP JACKET VP. | 1 |
| 15.1 | | > BLASTING PPE HOUSING V-PN16-DN32-5"-304 | 1 |
| 15.2 | 4217889 | > COUNTER FLANGE-G1"-PN16-GJL KIT | 1 |
| 15.3 | 4171321 | > PRIMING/DRAIN PLUG EPDM HELIX KIT | 1 |
| 16 | 4177964 | BASEPLATE HELIX V2/4/6 PN16 VP. | 1 |

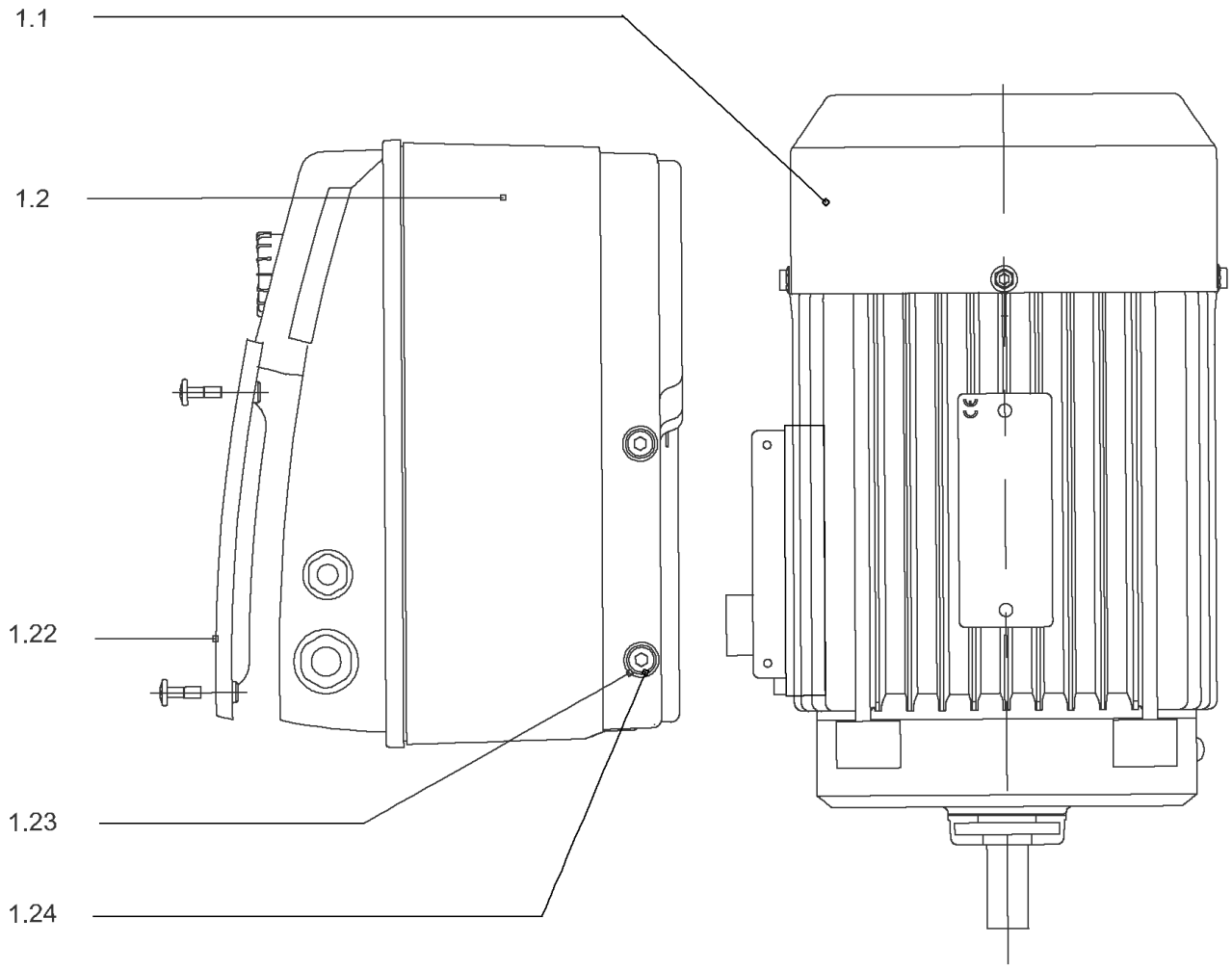
1.1
1.2
1.22
1.23
1.24

## DRIVE HELIX-VE206-IE4-WE KIT

| Item | Article no. | Description | Quantity |
|---|---|---|---|
| 1.1 | 4207914 | MOTOR 0.75/2/80 3~ 380V 60HZ IE4 WE VP. | 1 |
| | | SPARE PARTS MOTOR:ON REQUEST | 1 |
| 1.2 | 4209321 | MODULE HELIX-VE206-IE4-WE KIT | 1 |
| 1.22 | 2054372 | > MODULE COVER TL1,TL2+GASKET KIT | 1 |
| 1.23 | 4215716 | > SCREW M5X16 DIN912 8.8 A2A (4pieces) VP. | 1 |
| 1.24 | 2057978 | > RONDELLE A5,3 DIN6797 FST ZN (4 PIECES) | 1 |

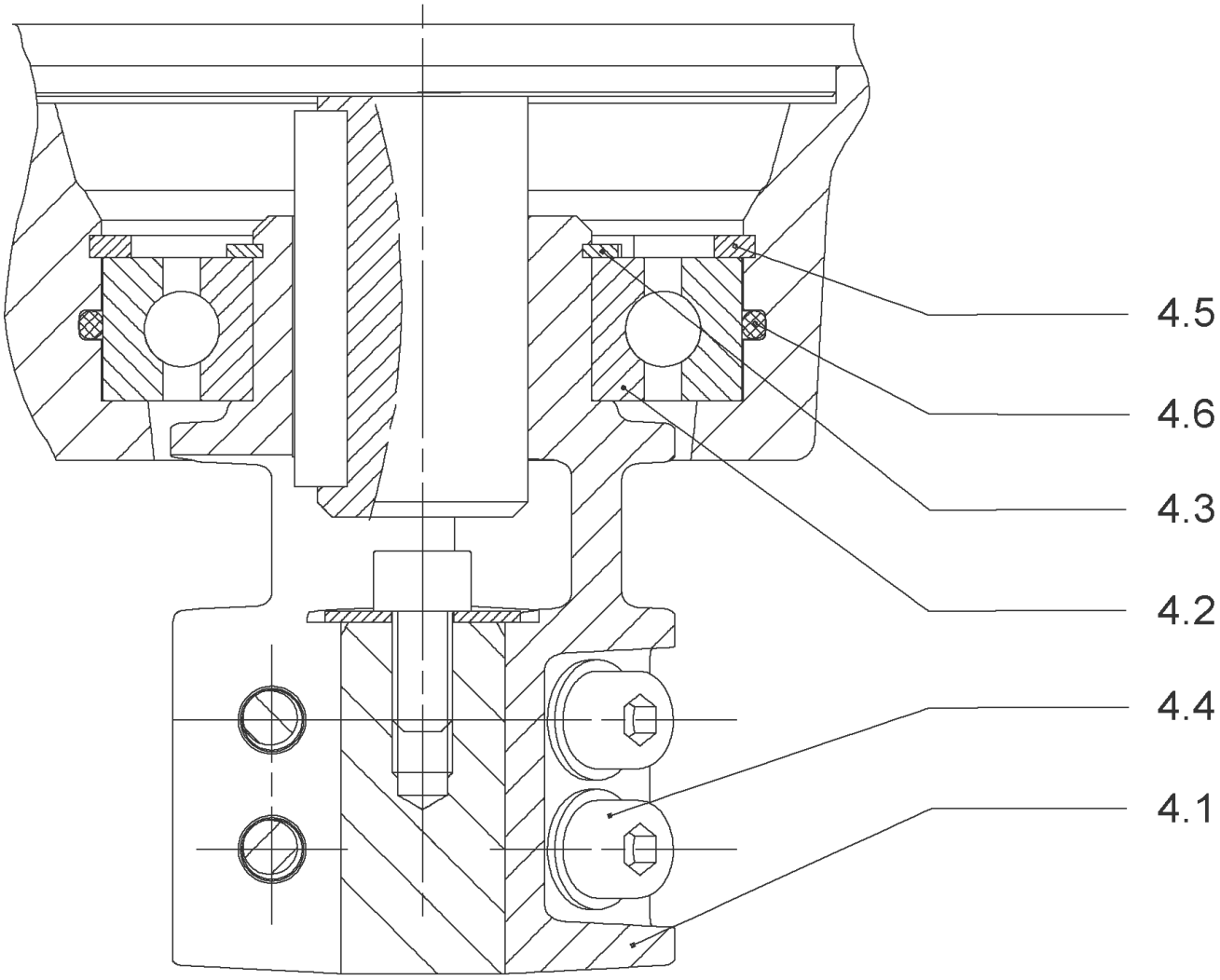
4.5
4.6
4.3
4.2
4.4
4.1

## COUPLING D.12XD.19 FT100 KIT (4178578)

| Item | Article no. | Description | Quantity |
|---|---|---|---|
| 4.1 | | COUPLING-M+ Ø12XØ19-FT100-MACHINED | 1 |
| 4.3 | 4234249 | CIRCLIP-FOR-SHAFT-D30x1.5 VP. | 1 |
| 4.2 | 2130977 | BALL BEARING 6206/ZZ-C3(HT)VP. | 1 |
| 4.4 | 4212716 | SCREW M6X20 KIT (4PIECES) | 1 |
| 4.5 | 4234250 | CIRCLIP-D62x2 VP. | 1 |
| 4.6 | 4234245 | O-RING 63X3 VP. | 1 |
| | | CONTACT-WASHER-6ETR-6,1x12,2x1,8-STEEL | 4 |

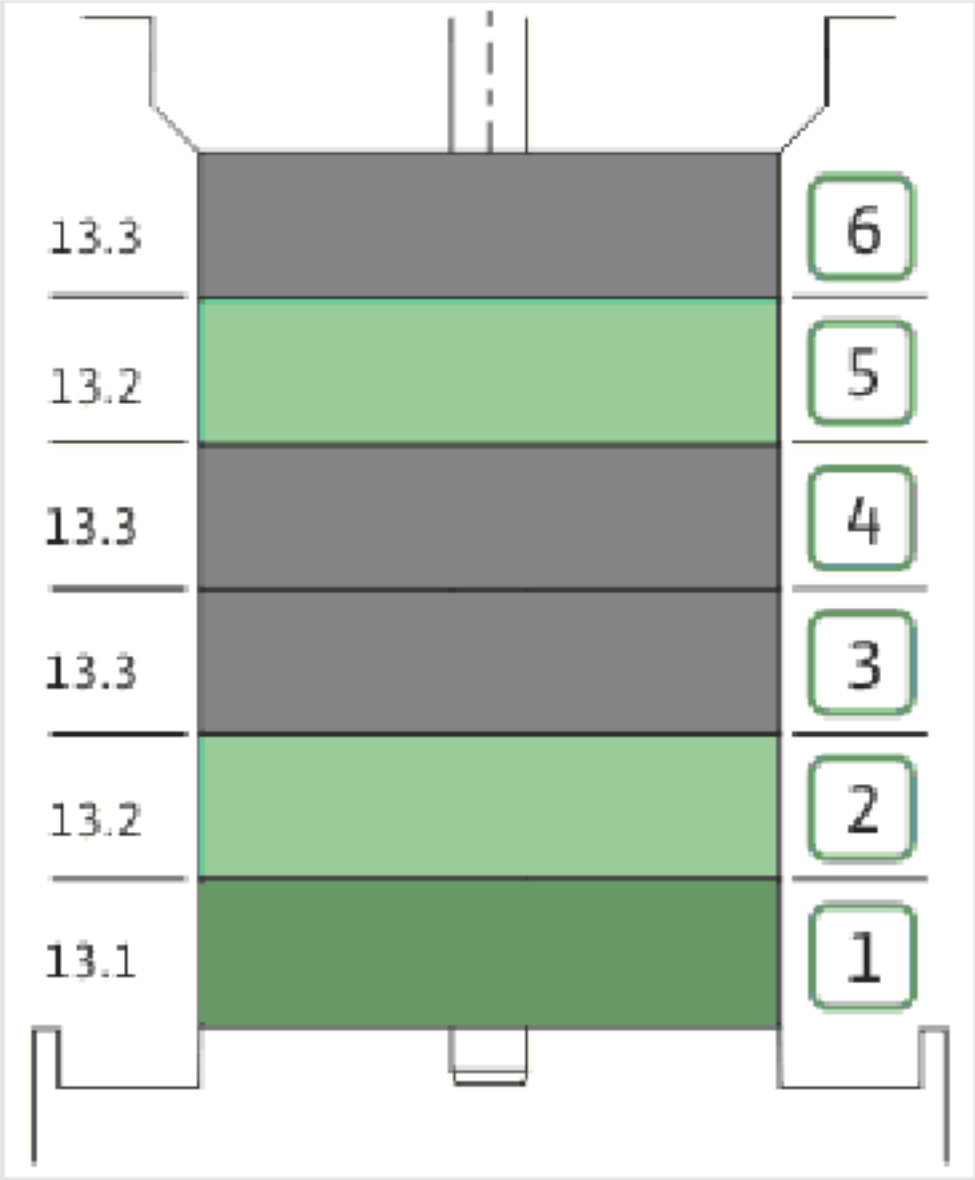
13.3
13.2
13.3
13.3
13.2
13.1
6
5
4
3
2
1

| Item | Article no. | Description | Quantity |
|---|---|---|---|
| 13.1 | 4179316 | STAGE HELIX 2 1.4301 KIT | 1 |
| | | > MACH.STG-CASING-WOGV-WNR-M+2-4-304 | 1 |
| | | > IMPELLER-M+2-304 | 1 |
| 13.2 | 4179317 | STAGE BEARING HELIX 2 1.4307 KIT | 1 |
| | | > MACH.BEARING-STG-CASING-WNR-M+2-304 | 1 |
| | | > IMPELLER-M+2-304 | 1 |
| | | > SHAFT SLEEVE SPACER Ø15,35x10,305-304 | 1 |
| | | > SHAFT-SLEEVE-D12xD16x14-CW | 1 |
| 13.3 | 4179319 | INTERMEDIATE STAGE HELIX 2 1.4301 KIT | 1 |
| | | > CORPS-ETG-STD-ACR-AJR-USIN.M+2-304 | 1 |
| | | > IMPELLER-M+2-304 | 1 |
| | | > IMPELLER SPACER Ø12,05X14,85-L24,285-304 | 1 |

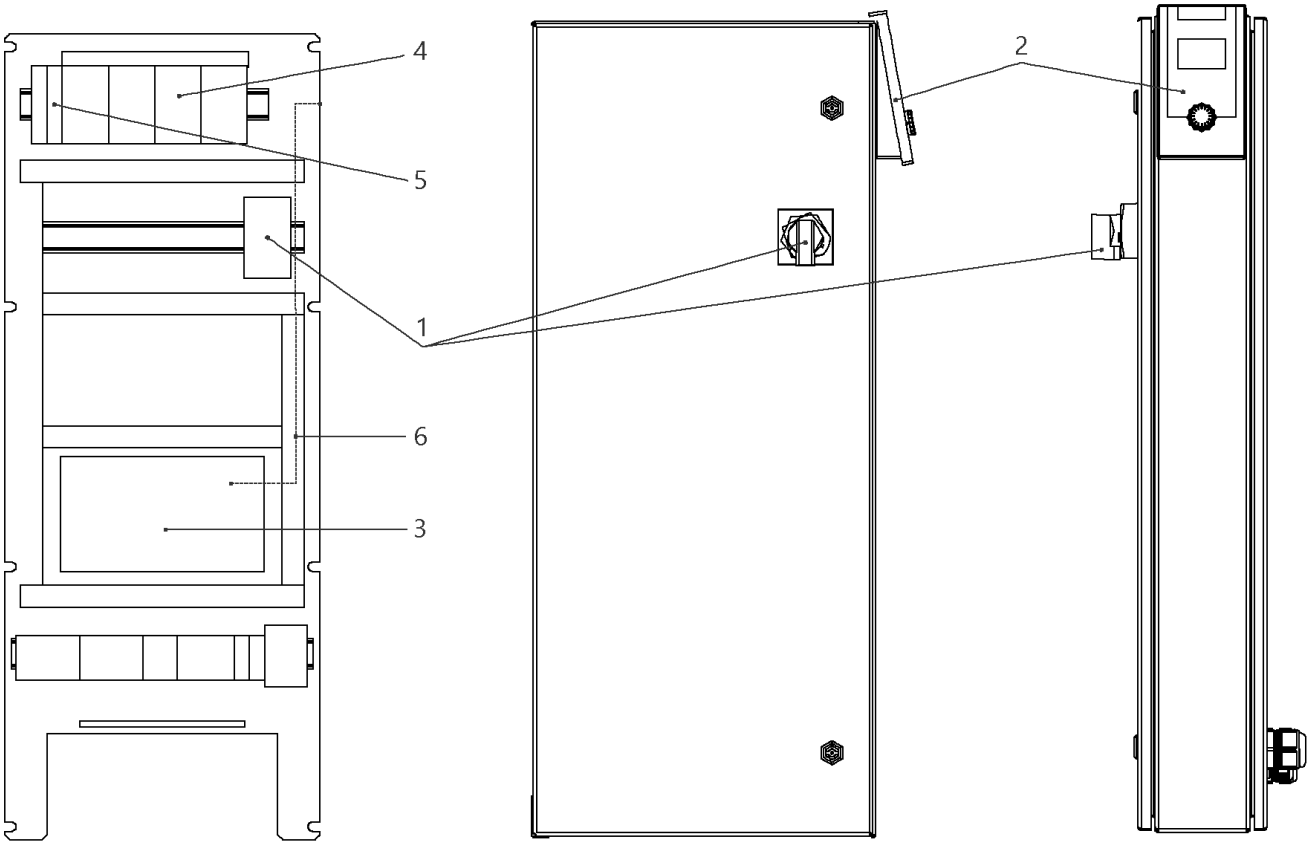
4
5
1
6
3
2

## W-CTRL-SCE-B-4x10A-T34-FM-ND1-AVC-PKG (2541915)

| Item | Article no. | Description | Quantity |
|---|---|---|---|
| 1 | 2104473 | MAIN SWITCH OT63F3 L105 KIT | 1 |
| 2 | 4184784 | CONTROL PANEL HMI SC KIT | 1 |
| 2 | 4185259 | ASSEMBLY DISPLAY SC PKG VP. | 1 |
| Note: DISPLAY ALONE / PLATINE SEULE | | | |
| 3 | 4185257 | ASSEMBLY CPU SCe Booster VP. | 1 |
| 5 | 2046288 | CIRCUIT BREAKER S201 B16 | 1 |
| 4 | 2119861 | AUTOMATIC CIRCUIT BREAKER S203 B13 3POL. | 1 |
| 6 | 4197081 | CABLE RJ45 CAT6 0,5M RED SC-PANEL VP. | 1 |

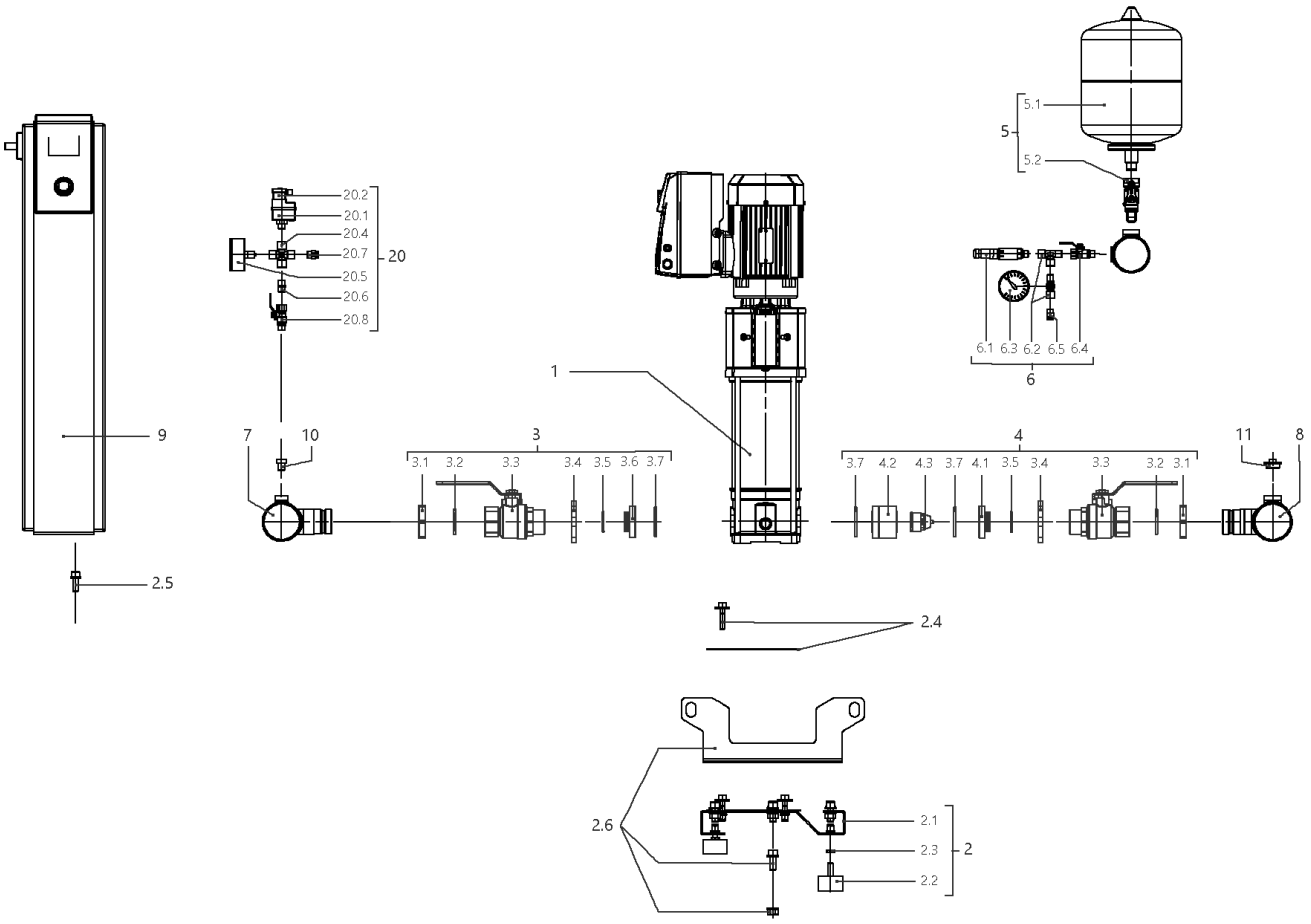
5.1
5
5.2
20.2
20.1
20.4
20.7
20
20.5
20.6
20.8
6.1 6.3 6.2 6.5 6.4
6
1
9
7
10
3
3.1 3.2 3.3 3.4 3.5 3.6 3.7
4
3.7 4.2 4.3 3.7 4.1 3.5 3.4 3.3 3.2 3.1
11
8
2.5
2.4
2.6
2.1
2.3
2
2.2

## SiBoost Smart 4HELIX VE208 (2541594)

| Item | Article no. | Description | Quantity |
|---|---|---|---|
| 1 | | HELIX VE208-1/16/E/S | 1 |
| Note: TO / BIS / JUSQU'AU 29/02/2016 | | | |
| 1 | 4201565 | HELIX VE208-1/16/E/S | 1 |
| Note: FROM / AB / À PARTIR DU 01/03/2016 | | | |
| 2 | 4200143 | BASE PLATE DE4 1450x300 KIT | 1 |
| 2.1 | | > BASEPLATE_4x4/6/10V_E300_1450x300BOX_150 | 1 |
| 2.2 | 2028654 | > VIBRATION DAMPER D.50X30 M10X28 | 1 |
| 2.3 | 2028281 | > NUT M10 DIN936 (ISO4035) 17H VZ | 1 |
| 2.4 | 4199875 | > HOLDER PUMP Siboost Helix V2/4 KIT | 1 |
| 2.5 | 4197084 | > HOLDER SWITCHBOX WILO Smart Control KIT | 1 |
| 2.6 | 4197085 | > LIFTING Siboost HELIX SC KIT | 1 |
| 3 | 4199876 | SUCTION SIDE Siboost Helix V2/4/6 KIT | 1 |
| 3.1 | 2032610 | > NUT G11/4 MS VP. | 1 |
| 3.2 | 2032611 | > O-RING ID.36,09X3,53N DIN3771 E7502 | 1 |
| 3.3 | 2507646 | > BALL VALVE G11/4"M-F-W.HANDLE 1/4-TURN | 1 |
| 3.4 | 2032613 | > SCREWED FLANGE G1 1/4" LK-75 ST37VZ | 1 |
| 3.5 | 2032614 | > O-RING ID.29,82X2,62N DIN3771 E7502 | 1 |
| 3.6 | 2032615 | > SPACER F.I/A KUH.DN32 CUZN | 1 |
| 3.7 | 2032616 | > O-RING ID.44X3,53N DIN3771 E7502 | 1 |
| 4 | 4199877 | DELIVERY SIDE Siboost Helix V2/4/6 KIT | 1 |
| 3.1 | 2032610 | > NUT G11/4 MS VP. | 1 |
| 3.2 | 2032611 | > O-RING ID.36,09X3,53N DIN3771 E7502 | 1 |
| 3.3 | 2507646 | > BALL VALVE G11/4"M-F-W.HANDLE 1/4-TURN | 1 |
| 3.4 | 2032613 | > SCREWED FLANGE G1 1/4" LK-75 ST37VZ | 1 |
| 3.5 | 2032614 | > O-RING ID.29,82X2,62N DIN3771 E7502 | 1 |
| 4.1 | 2058116 | > SPACER F.I/A KUH.DN32 CUZN | 1 |
| 3.7 | 2032616 | > O-RING ID.44X3,53N DIN3771 E7502 | 1 |
| 4.2 | 2058115 | > HOUSING RFV(RV-IN) DN32 SGS/DRS | 1 |
| 4.3 | 2027870 | > NON-RETURN-DEVICE INSERT DN32(MTR) | 1 |
| 5 | 2032642 | DIAPHREM TANK 8L/PN16 DIN4807/T5 KIT | 1 |
| 5.1 | 2045914 | > DIAPHREM TANK 8L TYP-DD 16BAR | 1 |
| 5.2 | 2027853 | > FLOW FITTING G3/4 FOR DIAPHRAGM VES. | 1 |
| 6 | 4197076 | PRESSURE SENSOR/ GAUGE 0-16BAR KIT | 1 |
| 6.1 | 2085909 | > PRESS.SENSOR 1/4" 0-16BAR 4-20MA VP. | 1 |

| Item | Article no. | Description | Quantity |
|---|---|---|---|
| 6.2 | 4197077 | > T-PIECE 1/4" VP. | 1 |
| 6.3 | 2028692 | > PRESSURE GAUGE NG63-PN16-G1/4 | 1 |
| 6.4 | 2028291 | > BALL TAP R1/4" PN42 GIACOMINI R254DL | 1 |
| 6.5 | 2028691 | > BLOWGUN 1/4" MS 30BAR VP. | 1 |
| 7 | 4225310 | PIPE-2"-4x11/4-E300-2x1/4x1200 VP. | 1 |
| 8 | 4225311 | PIPE-2"-4x11/4-E300-2x1/4-1x3/4x1200 VP. | 1 |
| 9 | 2541915 | W-CTRL-SCE-B-4x10A-T34-FM-ND1-AVC-PKG | 1 |
| 10 | 4197079 | PLUG G1/4"x10 AISI304 KIT | 1 |
| 11 | 2032654 | PLUG R3/4" MS VIEGA 1751 | 1 |
| 20 | | ASSEMBLY WMS. DE-EB. +VP | 1 |
| 20.1 | 2028652 | > PRESSURE SWITCH PS3-ASR 1/(1,3) VP. | 1 |
| 20.2 | 2130983 | > PLUG PS3-415 WITH KABEL 1,5M 2NO VP. | 1 |
| 20.4 | 2028290 | > CROSSPIECE R1/4" MS-NICKEL | 1 |
| 20.5 | 2028687 | > PRESSURE GAUGE NG63 R1/4" HI.0-6BAR | 1 |
| 20.6 | 2054268 | > DUAL NIPPLE G1/4" x G1/4" MS VP. | 1 |
| 20.7 | 2028691 | > BLOWGUN 1/4" MS 30BAR VP. | 1 |
| 20.8 | 2028291 | > BALL TAP R1/4" PN42 GIACOMINI R254DL | 1 |

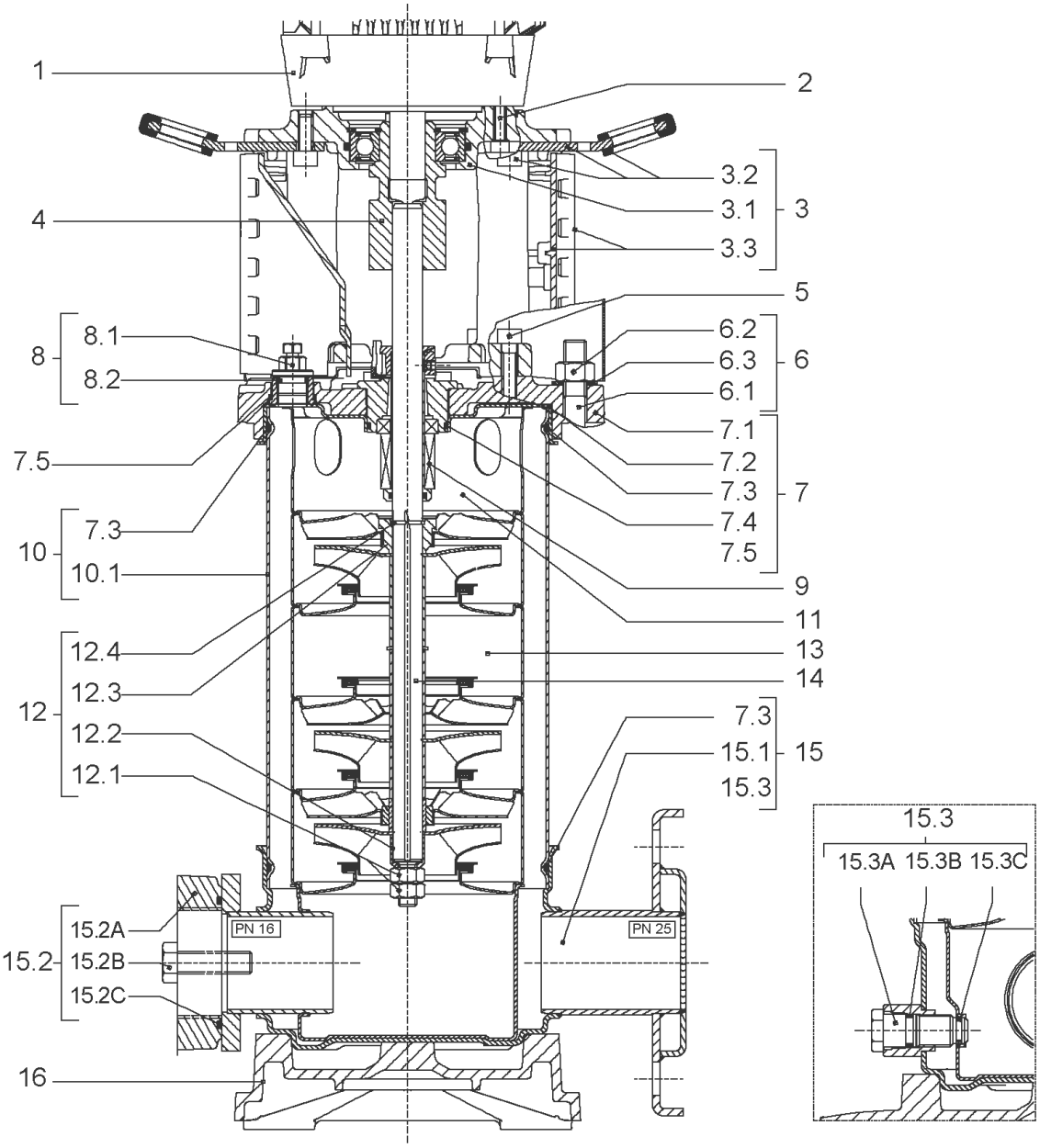
1
2
3.2
3.1
3
3.3
4
5
8.1
8
8.2
6.2
6.3
6
6.1
7.1
7.5
7.2
7.3
7
7.4
7.3
10
7.5
10.1
9
11
12.4
13
12.3
14
12
12.2
7.3
15.1
15
12.1
15.3
15.3
15.3A 15.3B 15.3C
15.2A
PN 16
PN 25
15.2
15.2B
15.2C
16

| Item | Article no. | Description | Quantity |
|---|---|---|---|
| 1 | | DRIVE HELIX-VE208-IE2-WE KIT | 1 |
| Note: MOTOR BRAND WILO ELEC | | | |
| 1 | | DRIVE HELIX-VE208-IE4-WE KIT | 1 |
| Note: MOTOR BRAND WILO ELEC | | | |
| 2 | 4159702 | SCREW M6X30 (4 PIECES) | 1 |
| 3 | 4172790 | EQUIPED LANTERN NEXIS FT 100 KIT | 1 |
| 3.1 | | > M+5_6_LANTERN_ONE-PIECE_FT100_CATA | 1 |
| 3.2 | 2127604 | > EYELET CPL.FT HELIX(2 PIECES) | 1 |
| 3.3 | 4159692 | > COUPLING PROTECTOR FT HELIX KIT | 1 |
| 4 | 4178578 | COUPLING D.12XD.19 FT100 KIT | 1 |
| 5 | 4159707 | SCREW M8X30 (4 PIECES) | 1 |
| 6 | 2018365 | STUD BOLT M12X392 KIT | 1 |
| 7 | 4210143 | STATIONARY RING HOLDER HELIX 6" EPDM | 1 |
| 7.2 | 2127607 | > STATIONARY RING HOLDER 6" HELIX 1.4301 V | 1 |
| 7.3 | 4176513 | > O-RING FOR PUMP JACKET VP. | 1 |
| 7.4 | 2127603 | > O-RING ID.37,6x2,4 EPDM VP. | 1 |
| 7.5 | 2127602 | > O-RING ID.21,35x2 EPDM VP. | 1 |
| 8 | 4159686 | FILING/PURGING PLUG HELIX EPDM KIT | 1 |
| 9 | 4178564 | SEAL-KIT-HELIX2-4 O/E KIT | 1 |
| 10 | 2127576 | HOUSING PIPE D.152x260 1.4301 KIT | 1 |
| 11 | 4179315 | CENTERING STAGE HELIX V2 1.4307 VP. | 1 |
| 12 | 4178568 | SHAFT EQUIPMENT HELIX V2/V4 KIT | 1 |
| 12.1 | | > NUT-H-M8-STAINLESS-STEEL A4-70 | 2 |
| 12.2 | | > SHAFT END WASHER Ø8/Ø12 316L | 1 |
| 12.3 | | > STOP COLLAR OF IMPELLER M+2/4 SINGLEBLOC | 1 |
| 12.4 | | > STOP-RUSH-1/2-D12xd2-M+316 | 2 |
| 13 | | HYDRAULIC HELIX V 208 1.4307 | 1 |
| 14 | 4178592 | SHAFT D.12X383 1.4301 VP. | 1 |
| 15 | 4174079 | PUMP HOUSING HELIX DN32 PN16 1.4301 KIT | 1 |
| 7.3 | 4176513 | > O-RING FOR PUMP JACKET VP. | 1 |
| 15.1 | | > BLASTING PPE HOUSING V-PN16-DN32-5"-304 | 1 |
| 15.2 | 4217889 | > COUNTER FLANGE-G1"-PN16-GJL KIT | 1 |
| 15.3 | 4171321 | > PRIMING/DRAIN PLUG EPDM HELIX KIT | 1 |
| 16 | 4177964 | BASEPLATE HELIX V2/4/6 PN16 VP. | 1 |

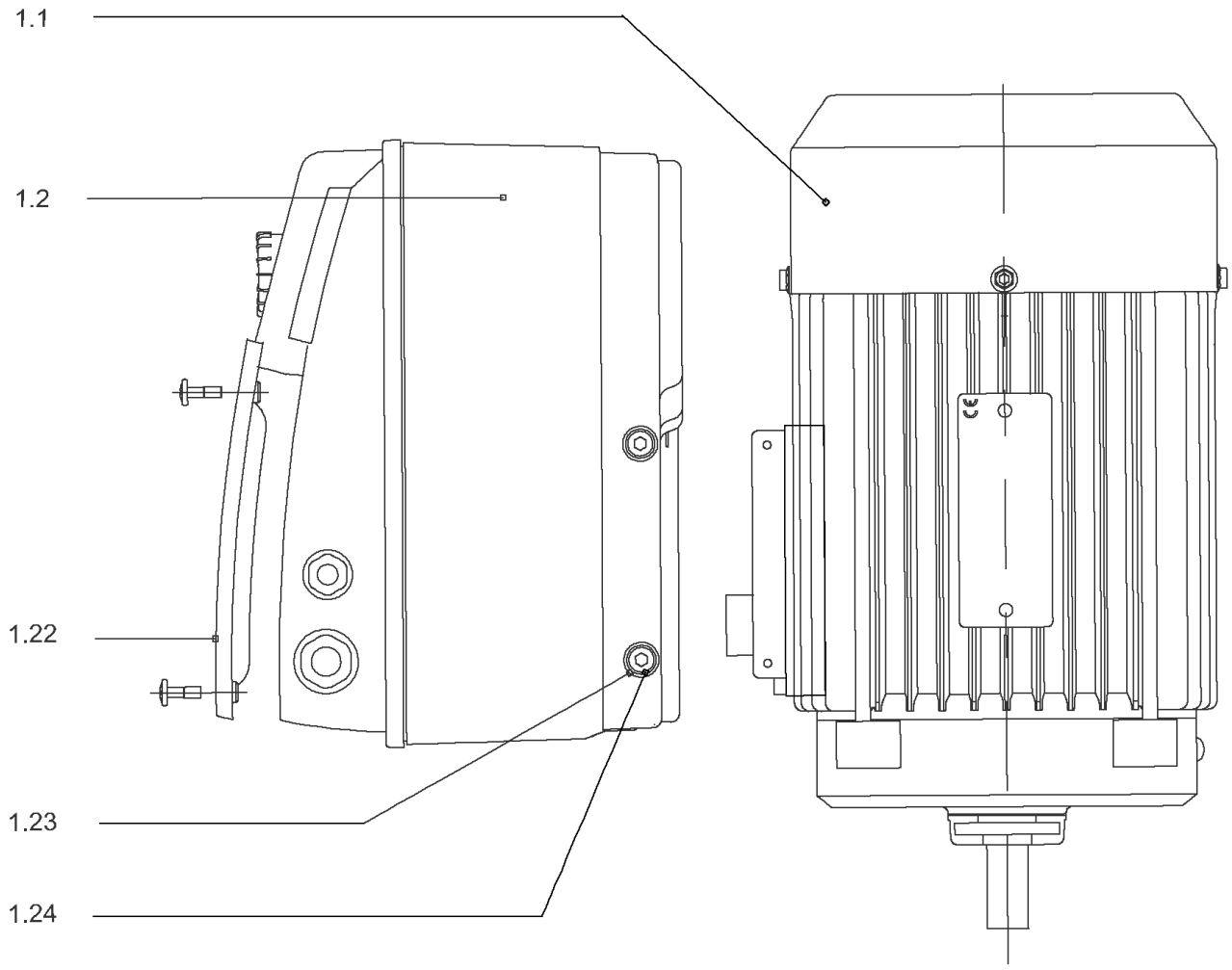
1.1
1.2
1.22
1.23
1.24

## DRIVE HELIX-VE208-IE2-WE KIT

| Item | Article no. | Description | Quantity |
|---|---|---|---|
| 1.1 | 4184817 | MOTOR 1,1/2/80 3~ 380V 60HZ IE2 WE VP. | 1 |
| | | SPARE PARTS MOTOR:ON REQUEST | 1 |
| 1.2 | 4186222 | MODULEHELIX-VE208-IE2-WE KIT | 1 |
| 1.22 | 2054372 | > MODULE COVER TL1,TL2+GASKET KIT | 1 |
| 1.23 | 4215716 | > SCREW M5X16 DIN912 8.8 A2A (4pieces) VP. | 1 |
| 1.24 | 2057978 | > RONDELLE A5,3 DIN6797 FST ZN (4 PIECES) | 1 |

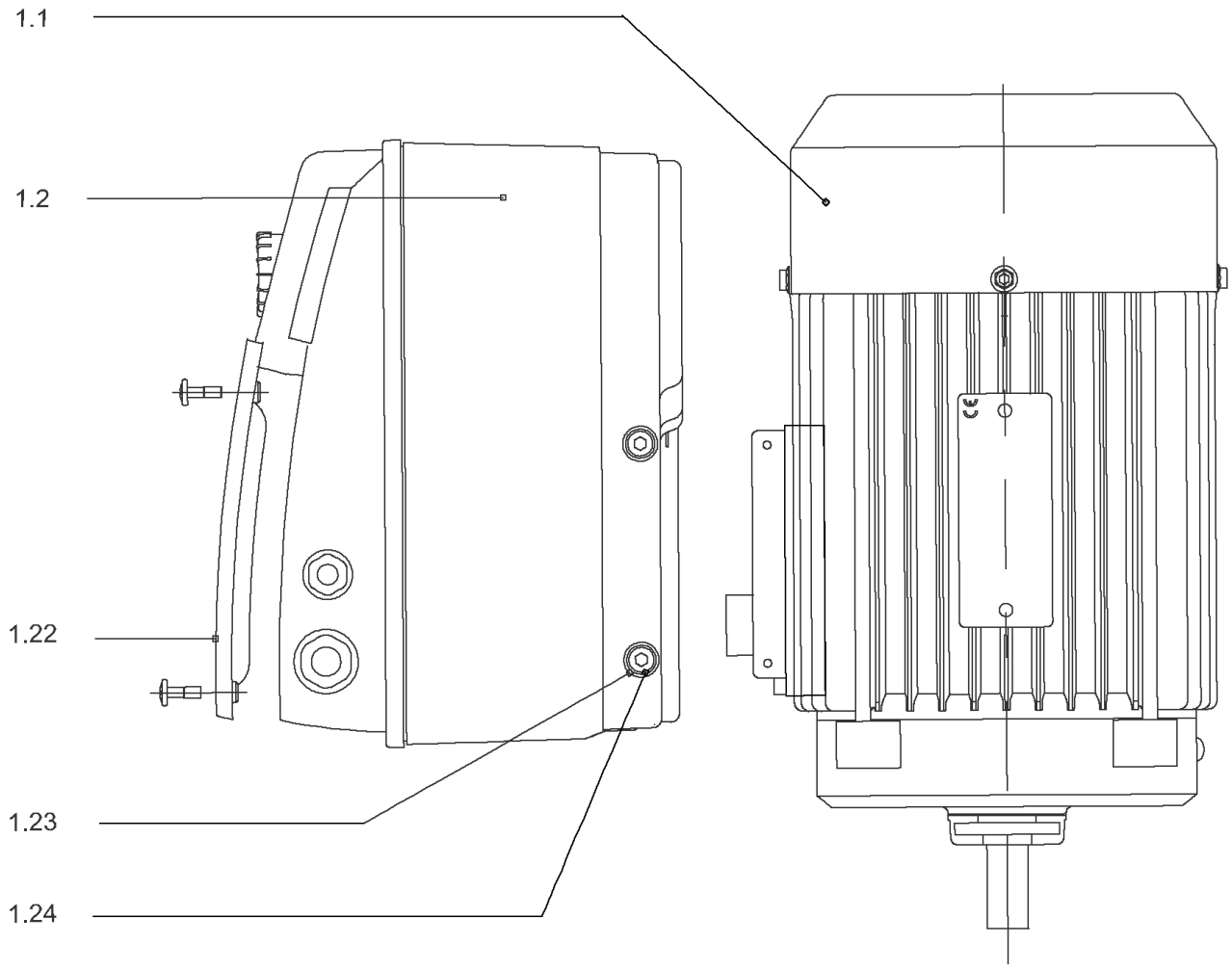
1.1
1.2
1.22
1.23
1.24

## DRIVE HELIX-VE208-IE4-WE KIT

| Item | Article no. | Description | Quantity |
|---|---|---|---|
| 1.1 | 4207916 | MOTOR 1.1/2/80 3~ 380V 60HZ IE4 WE VP. | 1 |
| | | SPARE PARTS MOTOR:ON REQUEST | 1 |
| 1.2 | 4209597 | MODULE HELIX-VE208-IE4-WE KIT | 1 |
| 1.22 | 2054372 | > MODULE COVER TL1,TL2+GASKET KIT | 1 |
| 1.23 | 4215716 | > SCREW M5X16 DIN912 8.8 A2A (4pieces) VP. | 1 |
| 1.24 | 2057978 | > RONDELLE A5,3 DIN6797 FST ZN (4 PIECES) | 1 |

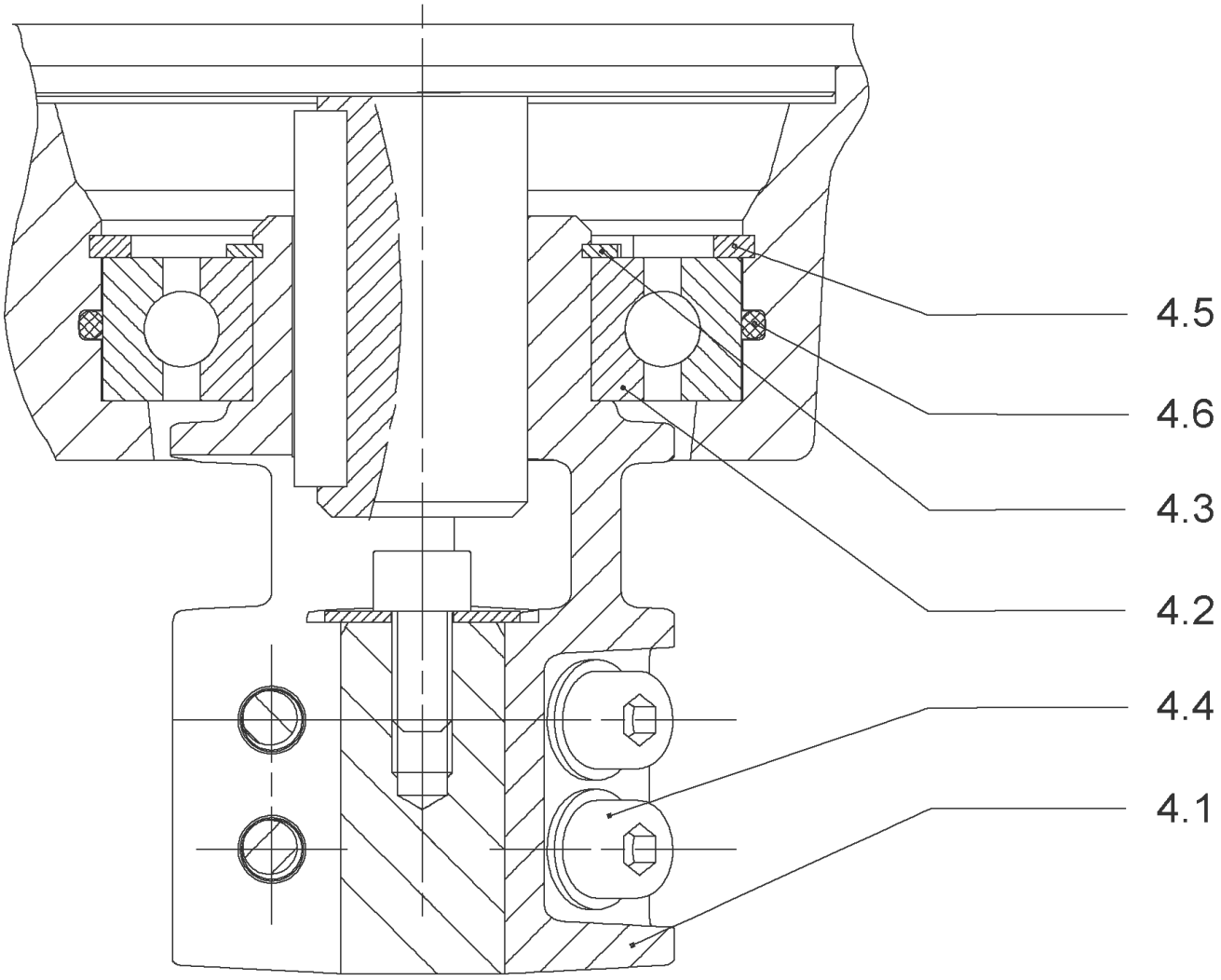
4.5
4.6
4.3
4.2
4.4
4.1

## COUPLING D.12XD.19 FT100 KIT (4178578)

| Item | Article no. | Description | Quantity |
|---|---|---|---|
| 4.1 | | COUPLING-M+ Ø12XØ19-FT100-MACHINED | 1 |
| 4.3 | 4234249 | CIRCLIP-FOR-SHAFT-D30x1.5 VP. | 1 |
| 4.2 | 2130977 | BALL BEARING 6206/ZZ-C3(HT)VP. | 1 |
| 4.4 | 4212716 | SCREW M6X20 KIT (4PIECES) | 1 |
| 4.5 | 4234250 | CIRCLIP-D62x2 VP. | 1 |
| 4.6 | 4234245 | O-RING 63X3 VP. | 1 |
| | | CONTACT-WASHER-6ETR-6,1x12,2x1,8-STEEL | 4 |

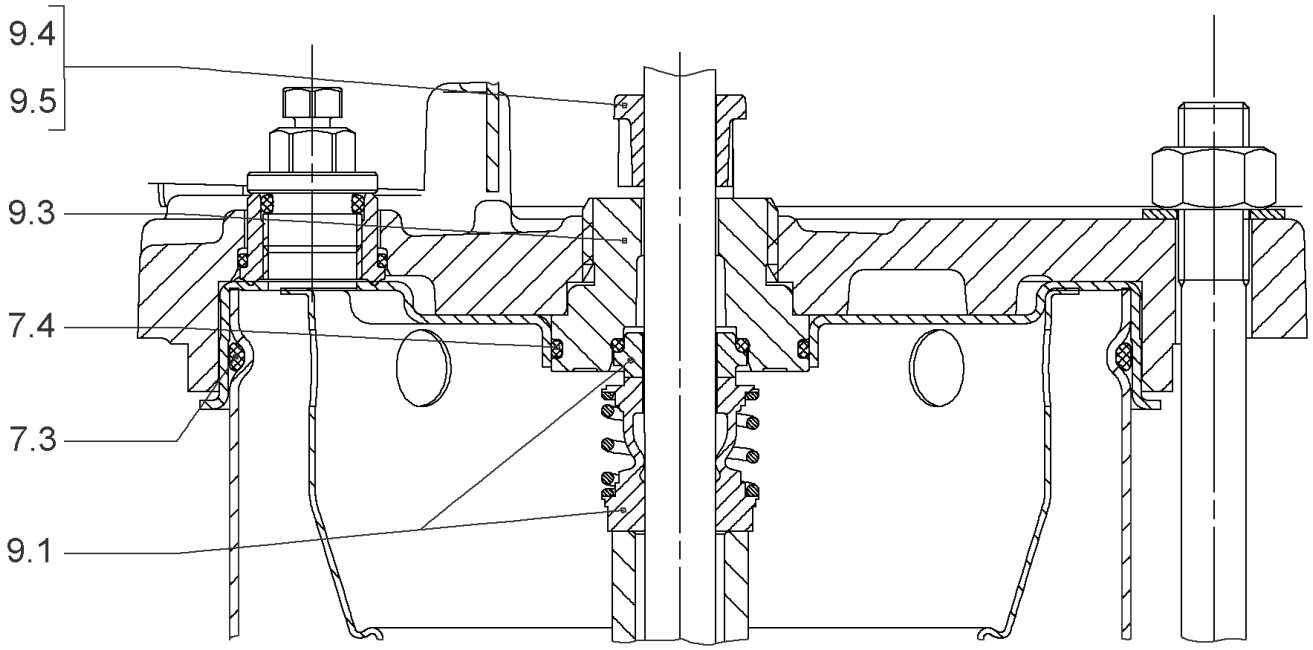
9.4
9.5
9.3
7.4
7.3
9.1

## SEAL-KIT-HELIX2-4 O/E KIT (4178564)

| Item | Article no. | Description | Quantity |
|---|---|---|---|
| 7.3 | 4176513 | O-RING FOR PUMP JACKET VP. | 1 |
| 7.4 | 2127603 | O-RING ID.37,6x2,4 EPDM VP. | 1 |
| 9.1 | 4178563 | M.SEAL.HELIX2-4 O/E VP. | 1 |
| 9.3 | 4178561 | RING HOLDER Ø22 1.4301 VP. | 1 |
| 9.5 | 4178562 | DRIVE RING D.22/12.2X10 MACH.VP. | 1 |
| 9.4 | 4176520 | SCREW CH M5x5 A4-70 ( 3PIECES ) | 1 |

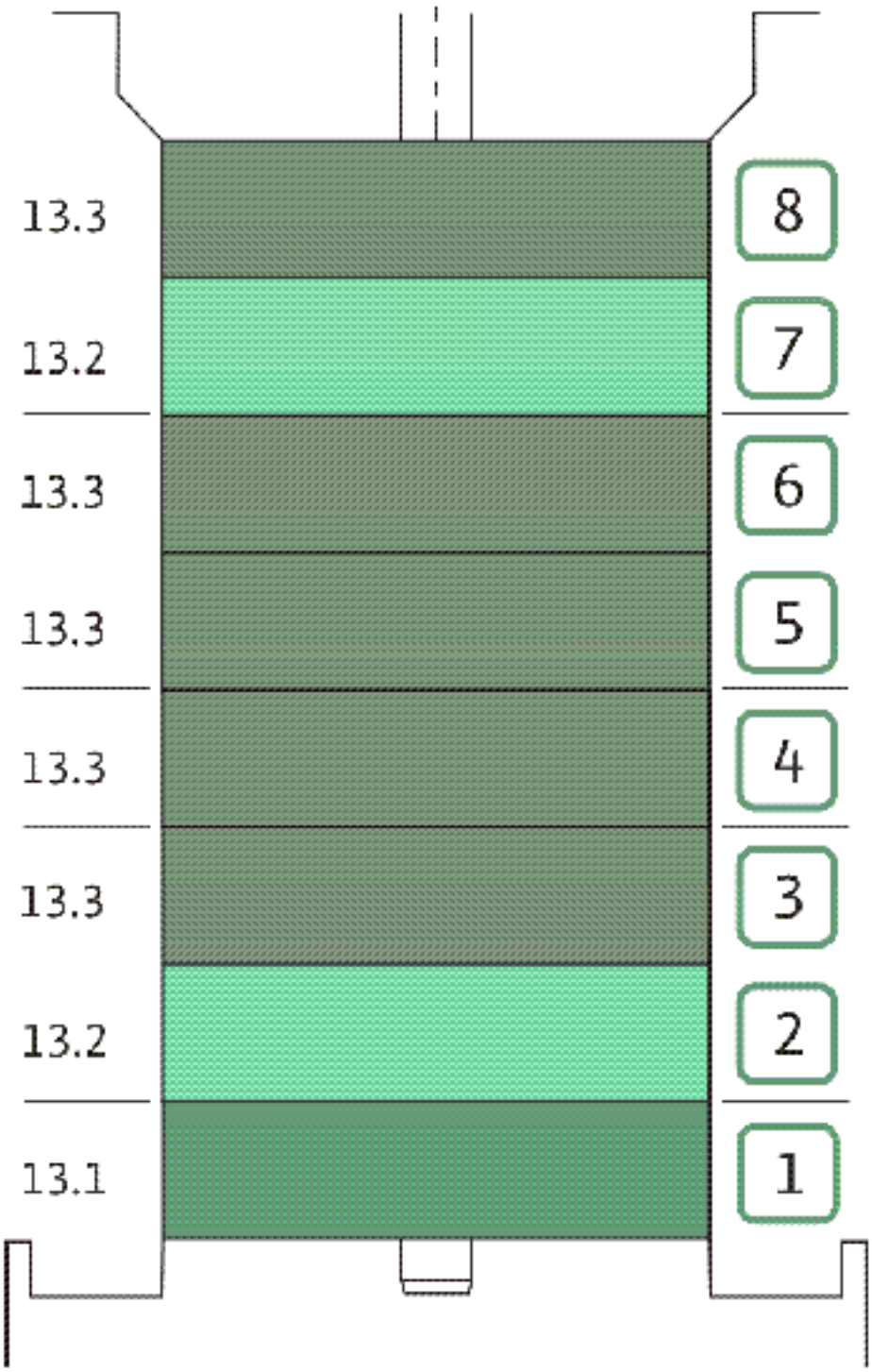
13.3
13.2
13.3
13.3
13.3
13.3
13.2
13.1
8
7
6
5
4
3
2
1

| Item | Article no. | Description | Quantity |
|---|---|---|---|
| 13.1 | 4179316 | STAGE HELIX 2 1.4301 KIT | 1 |
| | | > MACH.STG-CASING-WOGV-WNR-M+2-4-304 | 1 |
| | | > IMPELLER-M+2-304 | 1 |
| 13.2 | 4179317 | STAGE BEARING HELIX 2 1.4307 KIT | 1 |
| | | > MACH.BEARING-STG-CASING-WNR-M+2-304 | 1 |
| | | > IMPELLER-M+2-304 | 1 |
| | | > SHAFT SLEEVE SPACER Ø15,35x10,305-304 | 1 |
| | | > SHAFT-SLEEVE-D12xD16x14-CW | 1 |
| 13.3 | 4179319 | INTERMEDIATE STAGE HELIX 2 1.4301 KIT | 1 |
| | | > CORPS-ETG-STD-ACR-AJR-USIN.M+2-304 | 1 |
| | | > IMPELLER-M+2-304 | 1 |
| | | > IMPELLER SPACER Ø12,05X14,85-L24,285-304 | 1 |

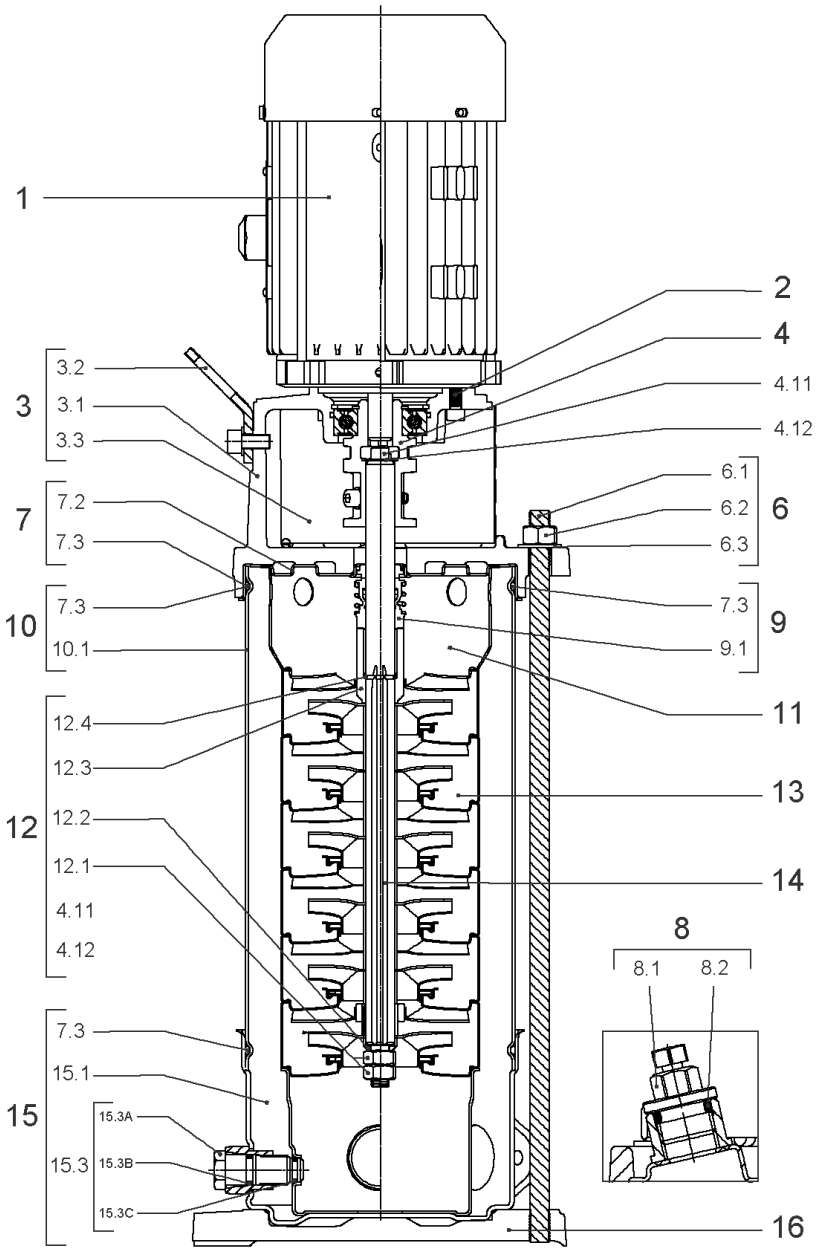
1
2
4
4.11
4.12
3
3.2
3.1
3.3
7
7.2
7.3
10
7.3
10.1
6
6.1
6.2
6.3
9
7.3
9.1
11
12
12.4
12.3
12.2
12.1
4.11
4.12
13
14
8
8.1
8.2
15
7.3
15.1
15.3
15.3A
15.3B
15.3C
16

## HELIX VE208-1/16/E/S (4201565)

| Item | Article no. | Description | Quantity |
|---|---|---|---|
| 1 | | DRIVE HELIX-VE208-IE4-WE KIT | 1 |
| Note: MOTOR BRAND WILO ELEC | | | |
| | | SPARE PARTS MOTOR:ON REQUEST | 1 |
| 2 | 4212716 | SCREW M6X20 KIT (4PIECES) | 1 |
| 3 | 4213752 | LANTERN FT100 HELIX KIT | 1 |
| 3.1 | | > LANT-MOT-VMI-ReDTC6"-FT100-MACHINED+CATA | 1 |
| 3.2 | 4184852 | > EYELET CPL.FT HELIX (2 PIECES) | 1 |
| 3.3 | 4213713 | > COUPLING PROTECTOR FT85/100 HELIX KIT | 1 |
| 4 | 4178578 | COUPLING D.12XD.19 FT100 KIT | 1 |
| 6 | 2018365 | STUD BOLT M12X392 KIT | 1 |
| 7 | 4212722 | STATIONARY RING HOLDER HELIX D23 ReDTC | 1 |
| 7.2 | 4212720 | > STATIONARY RING HOLDER HELIX D23 VP. | 1 |
| 7.3 | 4176513 | > O-RING FOR PUMP JACKET VP. | 1 |
| 8 | 4212724 | FILING/PURGING PLUG HELIX ReDTC KIT | 1 |
| 8.1 | | > FILLING PLUG MVI6"-304 | 1 |
| 8.2 | 4177800 | > O-RING EPDM PLUG HELIX VP. | 1 |
| 9 | 4212726 | MECH.SEAL HELIX V2/4 O/E ReDTC KIT | 1 |
| 9.1 | 4178563 | > M.SEAL.HELIX2-4 O/E VP. | 1 |
| 7.3 | 4176513 | > O-RING FOR PUMP JACKET VP. | 1 |
| 10 | 2127576 | HOUSING PIPE D.152x260 1.4301 KIT | 1 |
| 11 | 4179315 | CENTERING STAGE HELIX V2 1.4307 VP. | 1 |
| 12 | 4212729 | SHAFT EQUIPMENT HELIX V2/4 ReDTC KIT | 1 |
| 12.1 | | > NUT-H-M8-STAINLESS-STEEL A4-70 | 1 |
| 12.2 | | > SHAFT END WASHER Ø8/Ø12 316L | 1 |
| 12.3 | | > 1/2-SNAP-RING-2/4M3-316L | 1 |
| 12.4 | | > STOP-RUSH-1/2-D12xd2-M+316 | 1 |
| 4.11 | | > SCREW CHC-M6X14-8.8-ISO4762-GEOMET500A | 1 |
| 4.12 | | > WASHER D.24 L6U ZINK | 1 |
| 13 | | HYDRAULIC HELIX V 208 1.4307 | 1 |
| 14 | 4213754 | SHAFT D.12X331 HELIX 1.4057 VP. | 1 |
| 15 | 4174079 | PUMP HOUSING HELIX DN32 PN16 1.4301 KIT | 1 |
| 7.3 | 4176513 | > O-RING FOR PUMP JACKET VP. | 1 |
| 15.1 | | > BLASTING PPE HOUSING V-PN16-DN32-5"-304 | 1 |
| 15.2 | 4217889 | > COUNTER FLANGE-G1"-PN16-GJL KIT | 1 |

| Item | Article no. | Description | Quantity |
|---|---|---|---|
| 15.3 | 4171321 | > PRIMING/DRAIN PLUG EPDM HELIX KIT | 1 |
| 16 | 4177964 | BASEPLATE HELIX V2/4/6 PN16 VP. | 1 |

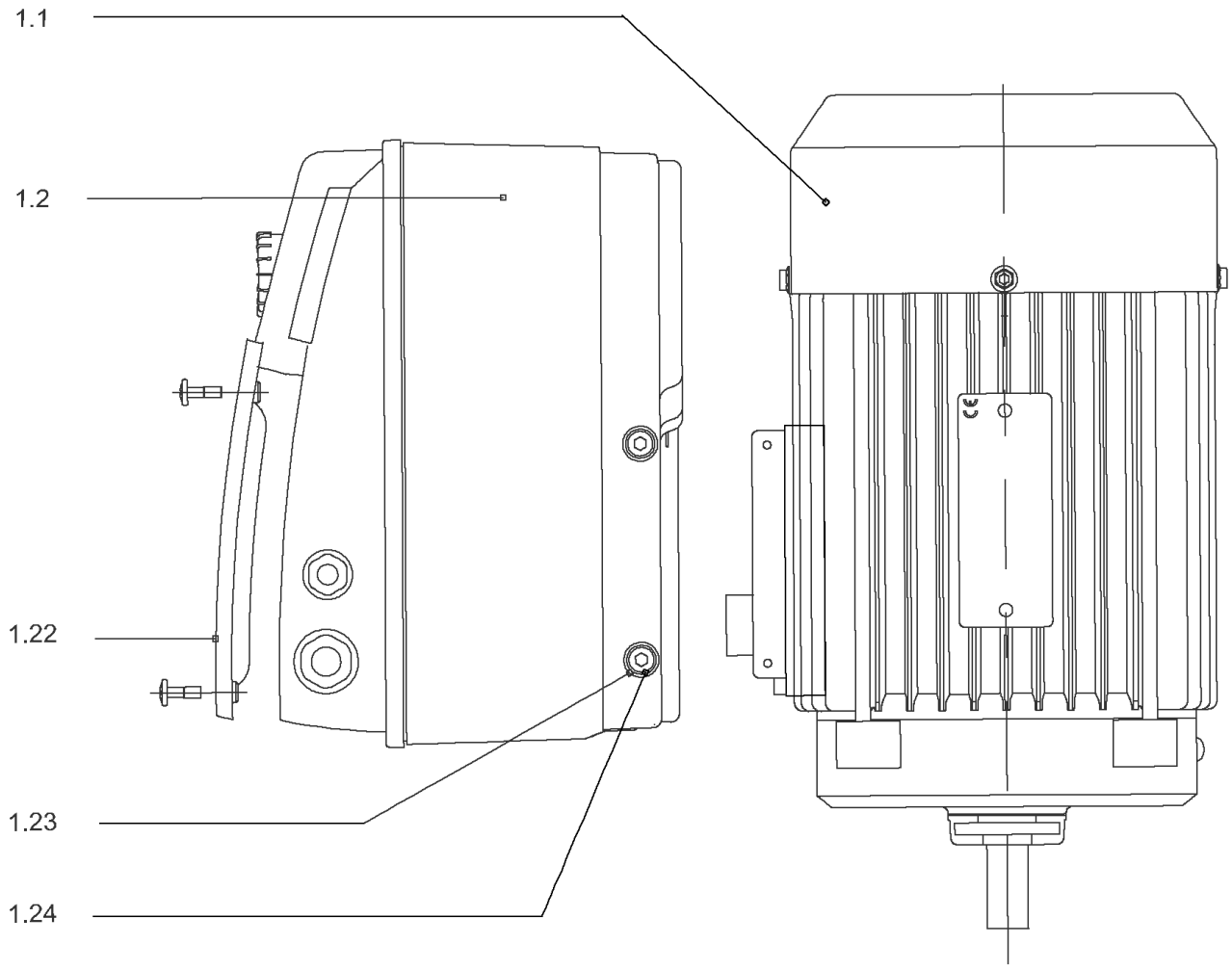
1.1
1.2
1.22
1.23
1.24

## DRIVE HELIX-VE208-IE4-WE KIT

| Item | Article no. | Description | Quantity |
|---|---|---|---|
| 1.1 | 4207916 | MOTOR 1.1/2/80 3~ 380V 60HZ IE4 WE VP. | 1 |
| | | SPARE PARTS MOTOR:ON REQUEST | 1 |
| 1.2 | 4209597 | MODULE HELIX-VE208-IE4-WE KIT | 1 |
| 1.22 | 2054372 | > MODULE COVER TL1,TL2+GASKET KIT | 1 |
| 1.23 | 4215716 | > SCREW M5X16 DIN912 8.8 A2A (4pieces) VP. | 1 |
| 1.24 | 2057978 | > RONDELLE A5,3 DIN6797 FST ZN (4 PIECES) | 1 |

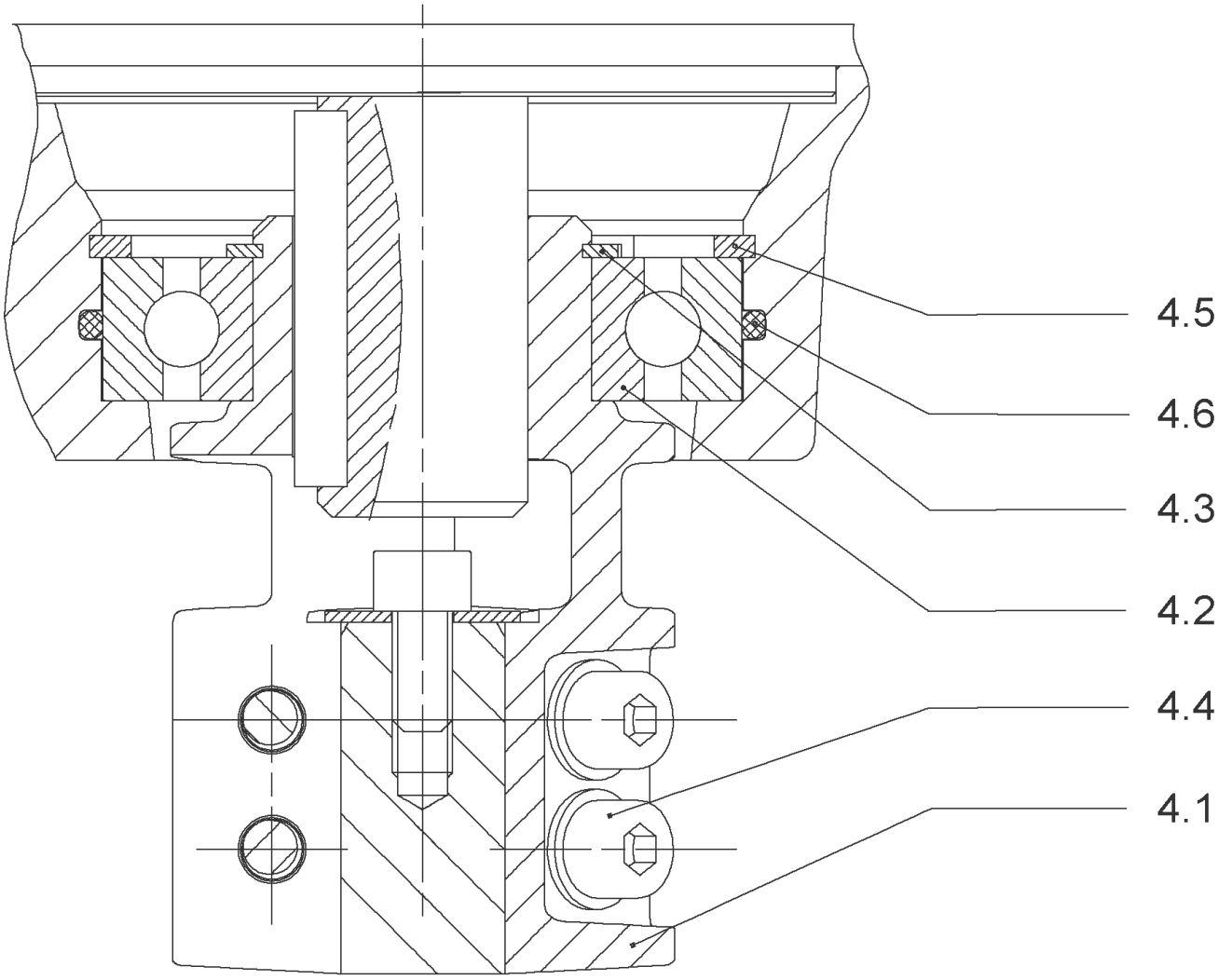
4.5
4.6
4.3
4.2
4.4
4.1

## COUPLING D.12XD.19 FT100 KIT (4178578)

| Item | Article no. | Description | Quantity |
|---|---|---|---|
| 4.1 | | COUPLING-M+ Ø12XØ19-FT100-MACHINED | 1 |
| 4.3 | 4234249 | CIRCLIP-FOR-SHAFT-D30x1.5 VP. | 1 |
| 4.2 | 2130977 | BALL BEARING 6206/ZZ-C3(HT)VP. | 1 |
| 4.4 | 4212716 | SCREW M6X20 KIT (4PIECES) | 1 |
| 4.5 | 4234250 | CIRCLIP-D62x2 VP. | 1 |
| 4.6 | 4234245 | O-RING 63X3 VP. | 1 |
| | | CONTACT-WASHER-6ETR-6,1x12,2x1,8-STEEL | 4 |

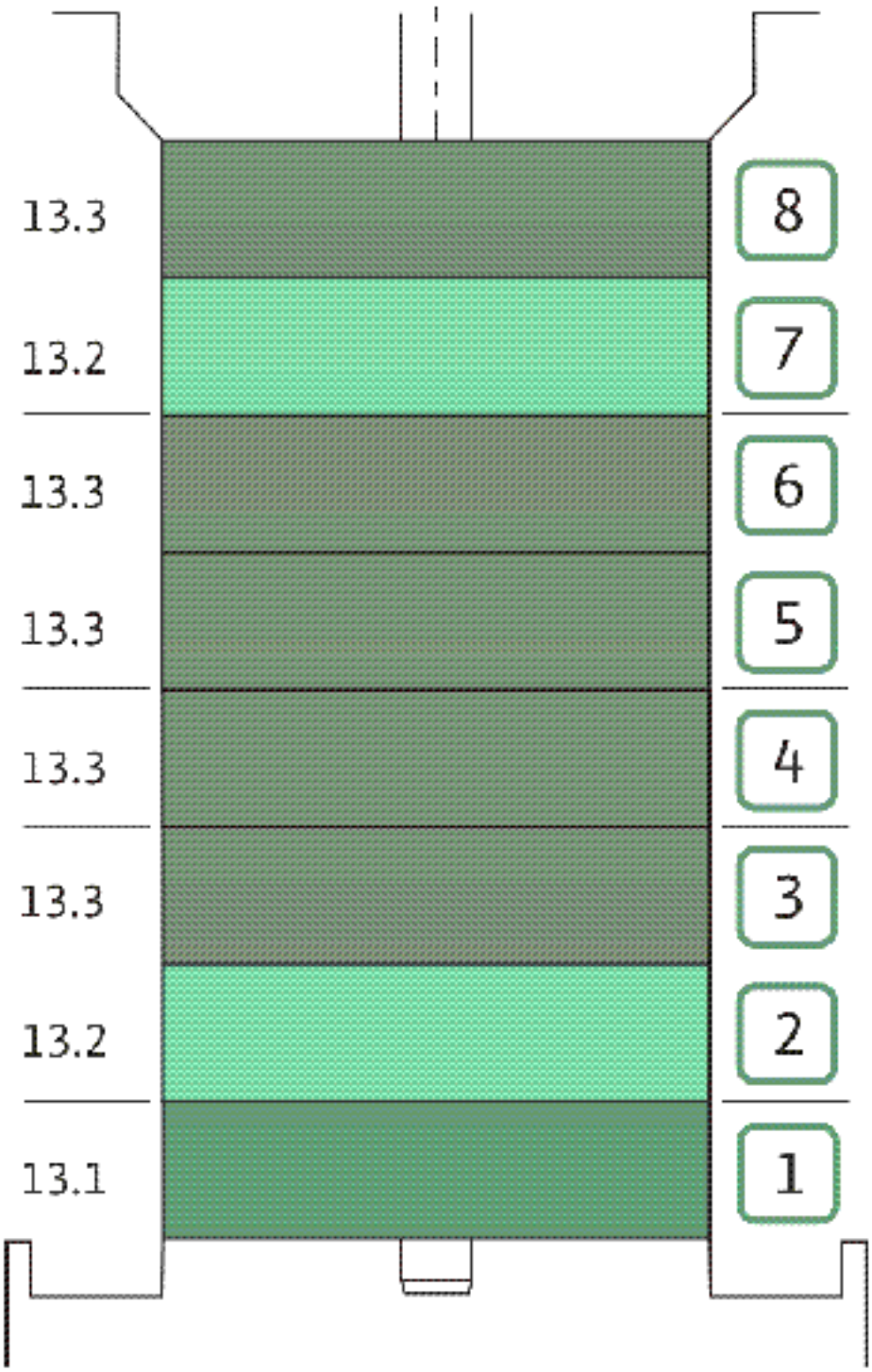
13.3
13.2
13.3
13.3
13.3
13.3
13.2
13.1
8
7
6
5
4
3
2
1

| Item | Article no. | Description | Quantity |
|---|---|---|---|
| 13.1 | 4179316 | STAGE HELIX 2 1.4301 KIT | 1 |
| | | > MACH.STG-CASING-WOGV-WNR-M+2-4-304 | 1 |
| | | > IMPELLER-M+2-304 | 1 |
| 13.2 | 4179317 | STAGE BEARING HELIX 2 1.4307 KIT | 1 |
| | | > MACH.BEARING-STG-CASING-WNR-M+2-304 | 1 |
| | | > IMPELLER-M+2-304 | 1 |
| | | > SHAFT SLEEVE SPACER Ø15,35x10,305-304 | 1 |
| | | > SHAFT-SLEEVE-D12xD16x14-CW | 1 |
| 13.3 | 4179319 | INTERMEDIATE STAGE HELIX 2 1.4301 KIT | 1 |
| | | > CORPS-ETG-STD-ACR-AJR-USIN.M+2-304 | 1 |
| | | > IMPELLER-M+2-304 | 1 |
| | | > IMPELLER SPACER Ø12,05X14,85-L24,285-304 | 1 |

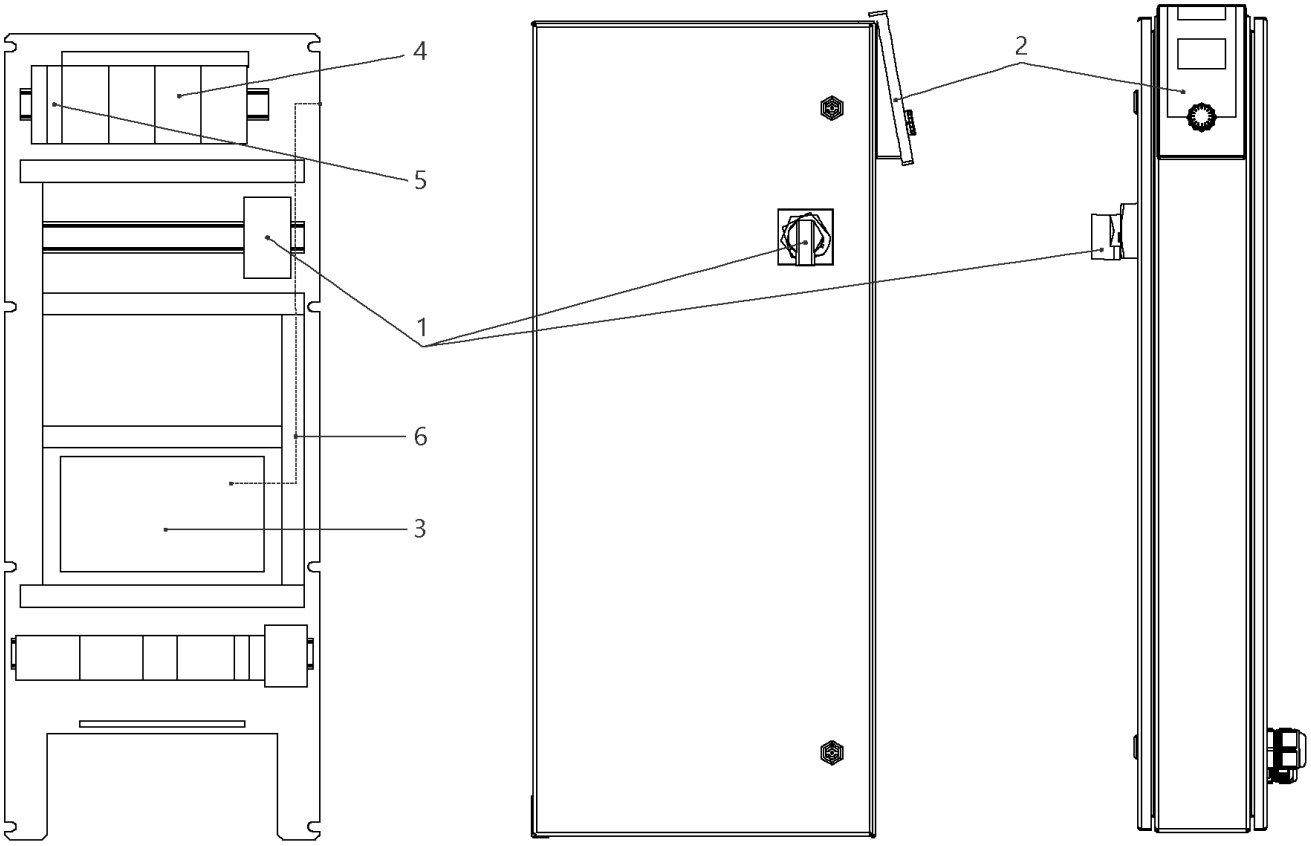
4
5
1
6
3
2

## W-CTRL-SCE-B-4x10A-T34-FM-ND1-AVC-PKG (2541915)

| Item | Article no. | Description | Quantity |
|---|---|---|---|
| 1 | 2104473 | MAIN SWITCH OT63F3 L105 KIT | 1 |
| 2 | 4184784 | CONTROL PANEL HMI SC KIT | 1 |
| 2 | 4185259 | ASSEMBLY DISPLAY SC PKG VP. | 1 |
| Note: DISPLAY ALONE / PLATINE SEULE | | | |
| 3 | 4185257 | ASSEMBLY CPU SCe Booster VP. | 1 |
| 5 | 2046288 | CIRCUIT BREAKER S201 B16 | 1 |
| 4 | 2119861 | AUTOMATIC CIRCUIT BREAKER S203 B13 3POL. | 1 |
| 6 | 4197081 | CABLE RJ45 CAT6 0,5M RED SC-PANEL VP. | 1 |

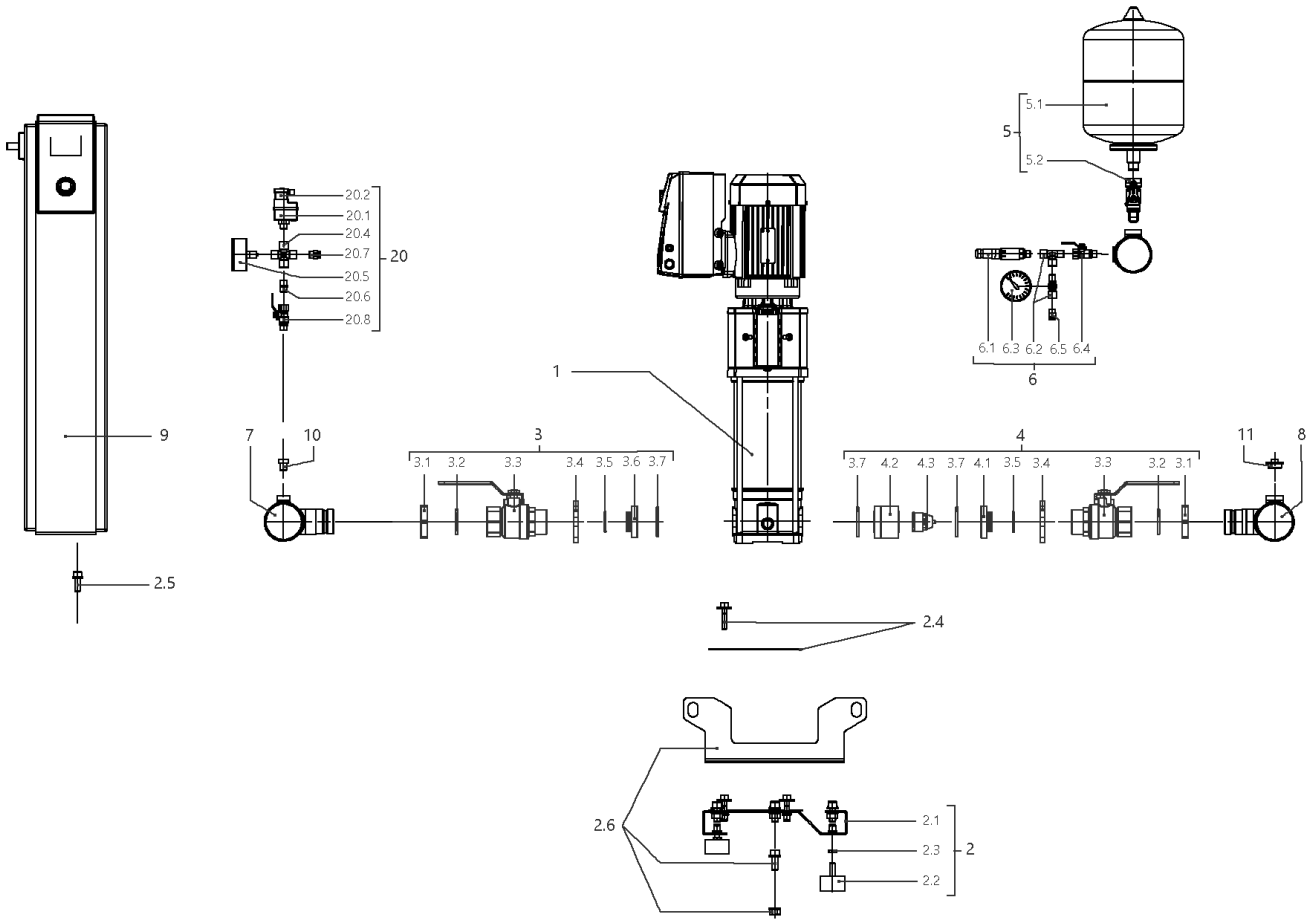
5.1
5
5.2
20.2
20.1
20.4
20.7
20
20.5
20.6
20.8
6.1 6.3 6.2 6.5 6.4
6
1
9
7
10
3
3.1 3.2 3.3 3.4 3.5 3.6 3.7
4
3.7 4.2 4.3 3.7 4.1 3.5 3.4 3.3 3.2 3.1
11
8
2.5
2.4
2.6
2.1
2.3
2
2.2

## SiBoost Smart 4HELIX VE211 (2541595)

| Item | Article no. | Description | Quantity |
|---|---|---|---|
| 1 | | HELIX VE211-1/16/E/S | 1 |
| Note: TO / BIS / JUSQU'AU 29/02/2016 | | | |
| 1 | 4201566 | HELIX VE211-1/16/E/S | 1 |
| Note: FROM / AB / À PARTIR DU 01/03/2016 | | | |
| 2 | 4200143 | BASE PLATE DE4 1450x300 KIT | 1 |
| 2.1 | | > BASEPLATE_4x4/6/10V_E300_1450x300BOX_150 | 1 |
| 2.2 | 2028654 | > VIBRATION DAMPER D.50X30 M10X28 | 1 |
| 2.3 | 2028281 | > NUT M10 DIN936 (ISO4035) 17H VZ | 1 |
| 2.4 | 4199875 | > HOLDER PUMP Siboost Helix V2/4 KIT | 1 |
| 2.5 | 4197084 | > HOLDER SWITCHBOX WILO Smart Control KIT | 1 |
| 2.6 | 4197085 | > LIFTING Siboost HELIX SC KIT | 1 |
| 3 | 4199876 | SUCTION SIDE Siboost Helix V2/4/6 KIT | 1 |
| 3.1 | 2032610 | > NUT G11/4 MS VP. | 1 |
| 3.2 | 2032611 | > O-RING ID.36,09X3,53N DIN3771 E7502 | 1 |
| 3.3 | 2507646 | > BALL VALVE G11/4"M-F-W.HANDLE 1/4-TURN | 1 |
| 3.4 | 2032613 | > SCREWED FLANGE G1 1/4" LK-75 ST37VZ | 1 |
| 3.5 | 2032614 | > O-RING ID.29,82X2,62N DIN3771 E7502 | 1 |
| 3.6 | 2032615 | > SPACER F.I/A KUH.DN32 CUZN | 1 |
| 3.7 | 2032616 | > O-RING ID.44X3,53N DIN3771 E7502 | 1 |
| 4 | 4199877 | DELIVERY SIDE Siboost Helix V2/4/6 KIT | 1 |
| 3.1 | 2032610 | > NUT G11/4 MS VP. | 1 |
| 3.2 | 2032611 | > O-RING ID.36,09X3,53N DIN3771 E7502 | 1 |
| 3.3 | 2507646 | > BALL VALVE G11/4"M-F-W.HANDLE 1/4-TURN | 1 |
| 3.4 | 2032613 | > SCREWED FLANGE G1 1/4" LK-75 ST37VZ | 1 |
| 3.5 | 2032614 | > O-RING ID.29,82X2,62N DIN3771 E7502 | 1 |
| 4.1 | 2058116 | > SPACER F.I/A KUH.DN32 CUZN | 1 |
| 3.7 | 2032616 | > O-RING ID.44X3,53N DIN3771 E7502 | 1 |
| 4.2 | 2058115 | > HOUSING RFV(RV-IN) DN32 SGS/DRS | 1 |
| 4.3 | 2027870 | > NON-RETURN-DEVICE INSERT DN32(MTR) | 1 |
| 5 | 2032642 | DIAPHREM TANK 8L/PN16 DIN4807/T5 KIT | 1 |
| 5.1 | 2045914 | > DIAPHREM TANK 8L TYP-DD 16BAR | 1 |
| 5.2 | 2027853 | > FLOW FITTING G3/4 FOR DIAPHRAGM VES. | 1 |
| 6 | 4197076 | PRESSURE SENSOR/ GAUGE 0-16BAR KIT | 1 |
| 6.1 | 2085909 | > PRESS.SENSOR 1/4" 0-16BAR 4-20MA VP. | 1 |

| Item | Article no. | Description | Quantity |
|---|---|---|---|
| 6.2 | 4197077 | > T-PIECE 1/4" VP. | 1 |
| 6.3 | 2028692 | > PRESSURE GAUGE NG63-PN16-G1/4 | 1 |
| 6.4 | 2028291 | > BALL TAP R1/4" PN42 GIACOMINI R254DL | 1 |
| 6.5 | 2028691 | > BLOWGUN 1/4" MS 30BAR VP. | 1 |
| 7 | 4225310 | PIPE-2"-4x11/4-E300-2x1/4x1200 VP. | 1 |
| 8 | 4225311 | PIPE-2"-4x11/4-E300-2x1/4-1x3/4x1200 VP. | 1 |
| 9 | 2541915 | W-CTRL-SCE-B-4x10A-T34-FM-ND1-AVC-PKG | 1 |
| 10 | 4197079 | PLUG G1/4"x10 AISI304 KIT | 1 |
| 11 | 2032654 | PLUG R3/4" MS VIEGA 1751 | 1 |
| 20 | | ASSEMBLY WMS. DE-EB. +VP | 1 |
| 20.1 | 2028652 | > PRESSURE SWITCH PS3-ASR 1/(1,3) VP. | 1 |
| 20.2 | 2130983 | > PLUG PS3-415 WITH KABEL 1,5M 2NO VP. | 1 |
| 20.4 | 2028290 | > CROSSPIECE R1/4" MS-NICKEL | 1 |
| 20.5 | 2028687 | > PRESSURE GAUGE NG63 R1/4" HI.0-6BAR | 1 |
| 20.6 | 2054268 | > DUAL NIPPLE G1/4" x G1/4" MS VP. | 1 |
| 20.7 | 2028691 | > BLOWGUN 1/4" MS 30BAR VP. | 1 |
| 20.8 | 2028291 | > BALL TAP R1/4" PN42 GIACOMINI R254DL | 1 |

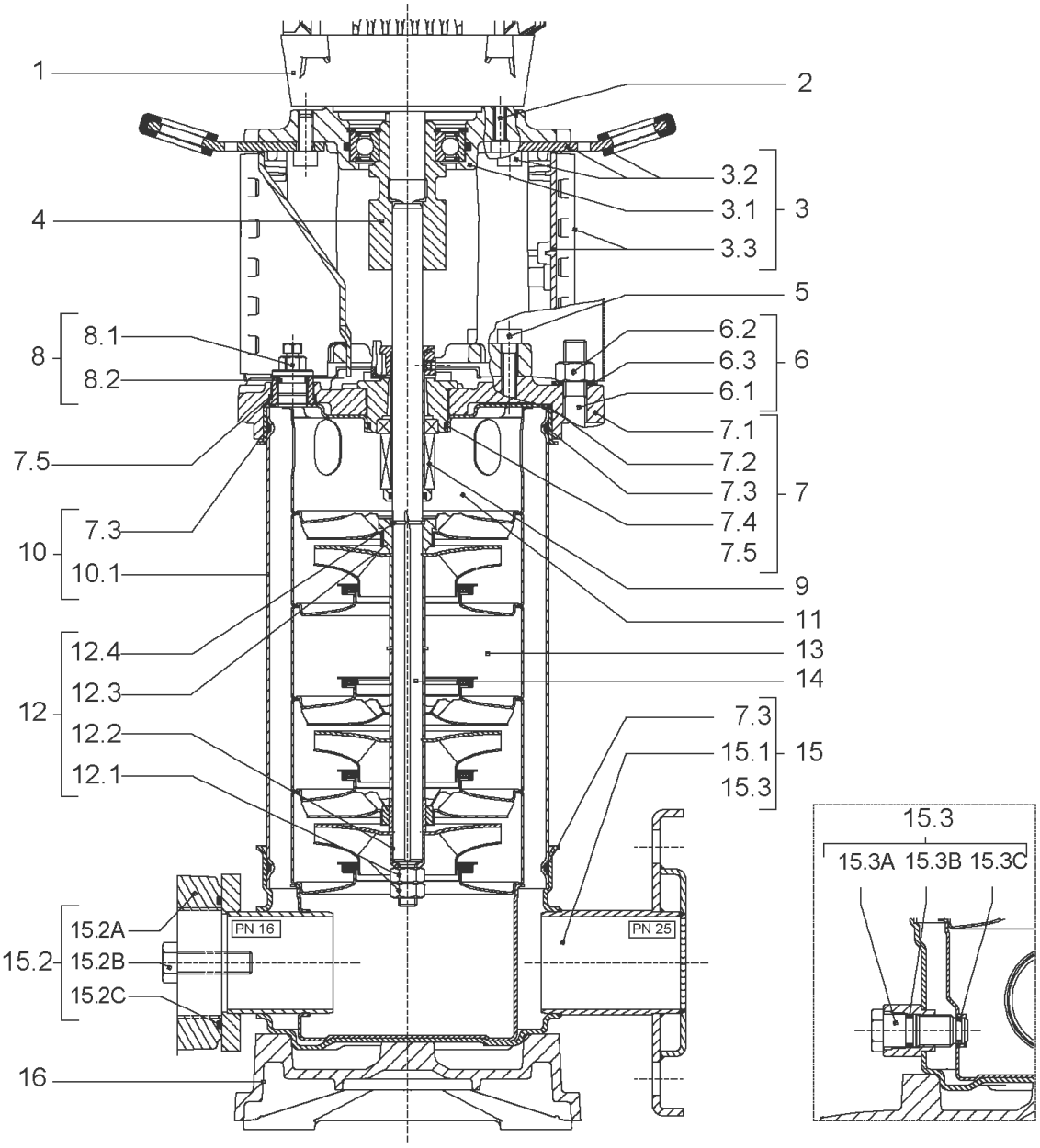
1
2
3.2
3.1
3
3.3
4
5
8.1
8
8.2
6.2
6.3
6
6.1
7.1
7.5
7.2
7.3
7
7.4
7.3
10
7.5
10.1
9
11
12.4
13
12.3
14
12
12.2
7.3
15.1
15
12.1
15.3
15.3
15.3A 15.3B 15.3C
15.2A
PN 16
PN 25
15.2
15.2B
15.2C
16

| Item | Article no. | Description | Quantity |
|---|---|---|---|
| 1 | | DRIVE HELIX-VE211-IE2-WE KIT | 1 |
| Note: MOTOR BRAND WILO ELEC | | | |
| 1 | | DRIVE HELIX-VE211-IE4-WE KIT | 1 |
| Note: MOTOR BRAND WILO ELEC | | | |
| 2 | 4159703 | SCREW M8X40 (4 PIECES) | 1 |
| 3 | 4172795 | LANTERNE FT115 HELIX KIT | 1 |
| 3.1 | | > M+5_6_LANTERN_ONE-PIECE_FT115_CATA | 1 |
| 3.2 | 2127604 | > EYELET CPL.FT HELIX(2 PIECES) | 1 |
| 3.3 | 4159692 | > COUPLING PROTECTOR FT HELIX KIT | 1 |
| 4 | 4178600 | COUPLING D.12XD.24 FT115 KIT | 1 |
| 5 | 4159707 | SCREW M8X30 (4 PIECES) | 1 |
| 6 | 4178605 | STUD BOLT M12X469 KIT | 1 |
| 6.1 | | > TIE BOLT M12-469x18x30-1.4057 | 1 |
| 6.2 | 2094647 | > NUT M12 M12 ISO4032 VP. | 1 |
| 6.3 | 2123557 | > WASHER CS-12.4-24-1.6-NFE25 (4 PIECES) | 1 |
| 7 | 4210143 | STATIONARY RING HOLDER HELIX 6" EPDM | 1 |
| 7.2 | 2127607 | > STATIONARY RING HOLDER 6" HELIX 1.4301 V | 1 |
| 7.3 | 4176513 | > O-RING FOR PUMP JACKET VP. | 1 |
| 7.4 | 2127603 | > O-RING ID.37,6x2,4 EPDM VP. | 1 |
| 7.5 | 2127602 | > O-RING ID.21,35x2 EPDM VP. | 1 |
| 8 | 4159686 | FILING/PURGING PLUG HELIX EPDM KIT | 1 |
| 9 | 4178564 | SEAL-KIT-HELIX2-4 O/E KIT | 1 |
| 10 | 4178606 | HOUSING-PIPE D.152X335 1.4304 KIT | 1 |
| 7.3 | 4176513 | > O-RING FOR PUMP JACKET VP. | 1 |
| 10.1 | | > HOUSING-PIPE Ø152-M+211/411-304 | 1 |
| 11 | 4179315 | CENTERING STAGE HELIX V2 1.4307 VP. | 1 |
| 12 | 4178568 | SHAFT EQUIPMENT HELIX V2/V4 KIT | 1 |
| 12.1 | | > NUT-H-M8-STAINLESS-STEEL A4-70 | 2 |
| 12.2 | | > SHAFT END WASHER Ø8/Ø12 316L | 1 |
| 12.3 | | > STOP COLLAR OF IMPELLER M+2/4 SINGLEBLOC | 1 |
| 12.4 | | > STOP-RUSH-1/2-D12xd2-M+316 | 2 |
| 13 | | HYDRAULIC HELIX V 211 1.4307 | 1 |
| 14 | 4178608 | SHAFT D.12X458 1.4301 VP. | 1 |
| 15 | 4174079 | PUMP HOUSING HELIX DN32 PN16 1.4301 KIT | 1 |

| Item | Article no. | Description | Quantity |
|---|---|---|---|
| 7.3 | 4176513 | > O-RING FOR PUMP JACKET VP. | 1 |
| 15.1 | | > BLASTING PPE HOUSING V-PN16-DN32-5"-304 | 1 |
| 15.2 | 4217889 | > COUNTER FLANGE-G1"-PN16-GJL KIT | 1 |
| 15.3 | 4171321 | > PRIMING/DRAIN PLUG EPDM HELIX KIT | 1 |
| 16 | 4177964 | BASEPLATE HELIX V2/4/6 PN16 VP. | 1 |

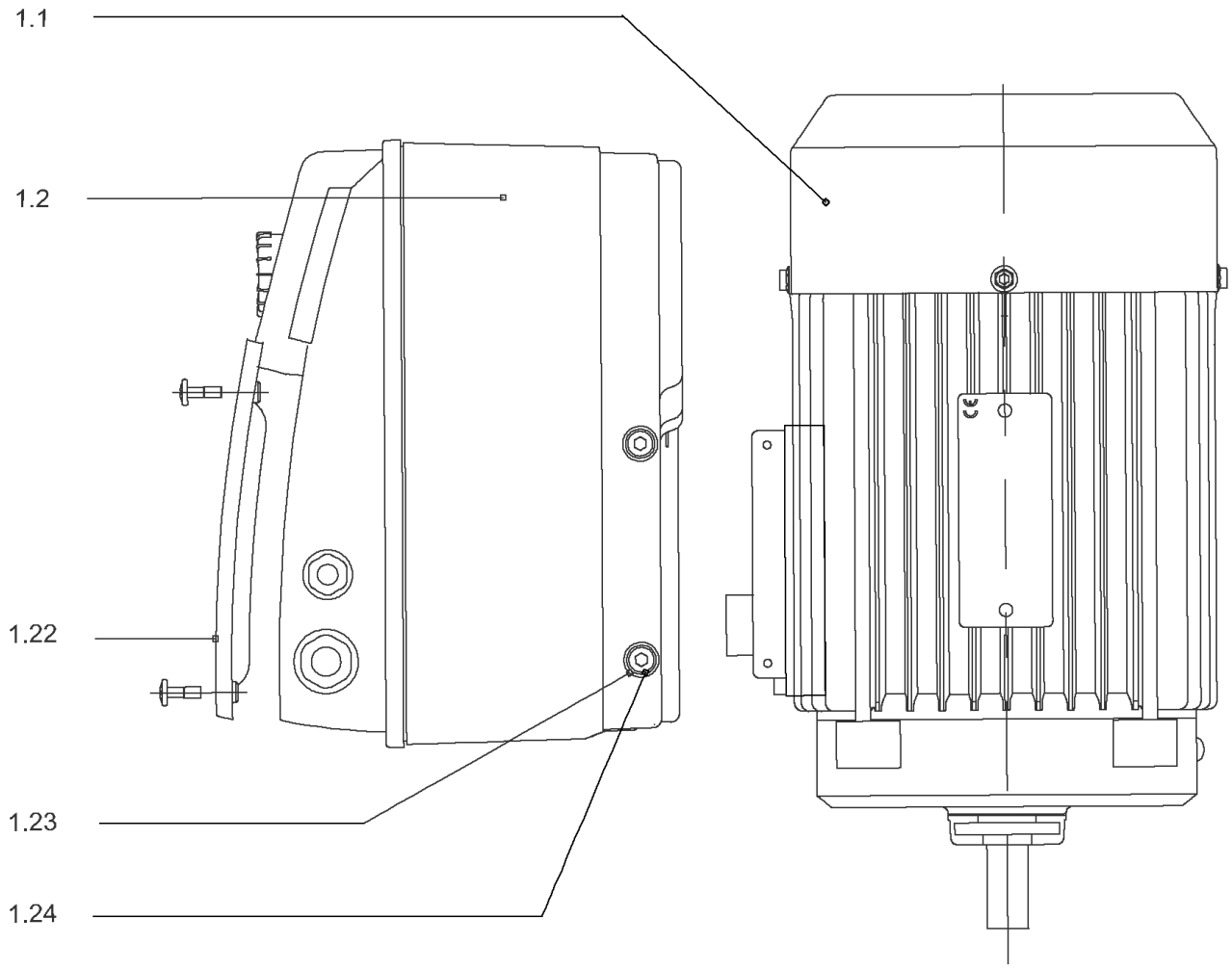
1.1
1.2
1.22
1.23
1.24

## DRIVE HELIX-VE211-IE2-WE KIT

| Item | Article no. | Description | Quantity |
|---|---|---|---|
| 1.1 | | MOTOR 1,5/2/90 3~ 380V 60HZ IE2 WE VP. | 1 |
| Note: no longer available/nicht mehrlieferbar/n'est plus disponible | | | |
| | | SPARE PARTS MOTOR:ON REQUEST | 1 |
| 1.2 | 4184865 | MODULE HELIX-VE211-IE2-WE KIT | 1 |
| 1.22 | 2054227 | > MODULE COVER/GASKET TL3/4 KIT | 1 |
| 1.23 | 4215716 | > SCREW M5X16 DIN912 8.8 A2A (4pieces) VP. | 1 |
| 1.24 | 2057978 | > RONDELLE A5,3 DIN6797 FST ZN (4 PIECES) | 1 |

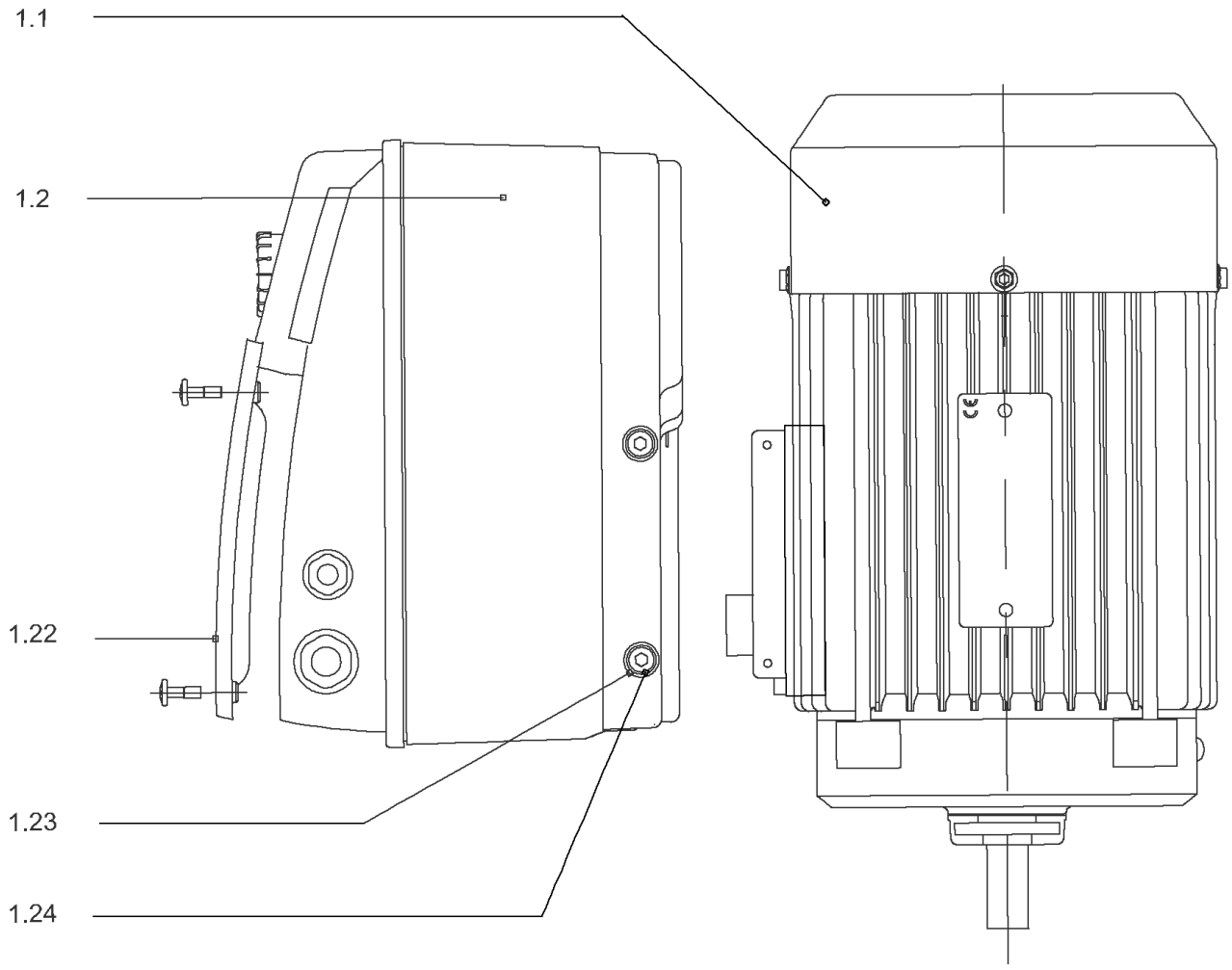
1.1
1.2
1.22
1.23
1.24

## DRIVE HELIX-VE211-IE4-WE KIT

| Item | Article no. | Description | Quantity |
|---|---|---|---|
| 1.1 | 4207918 | MOTOR 1.5/2/90 3~ 380V 60HZ IE4 WE VP. | 1 |
| | | SPARE PARTS MOTOR:ON REQUEST | 1 |
| 1.2 | 4213729 | MODULE HELIX-VE211-IE4-WE KIT | 1 |
| 1.22 | 2054227 | > MODULE COVER/GASKET TL3/4 KIT | 1 |
| 1.23 | 4215716 | > SCREW M5X16 DIN912 8.8 A2A (4pieces) VP. | 1 |
| 1.24 | 2057978 | > RONDELLE A5,3 DIN6797 FST ZN (4 PIECES) | 1 |

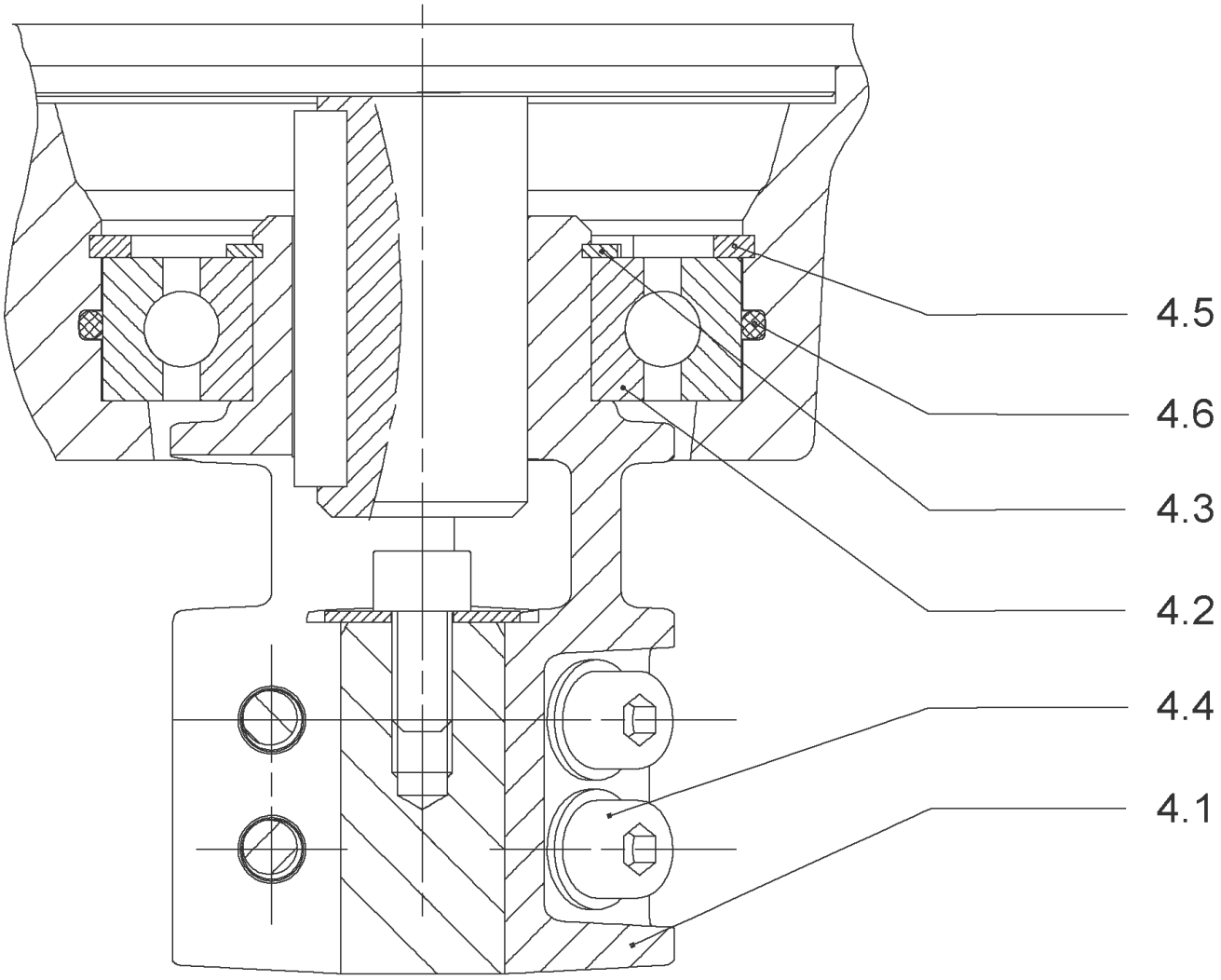
4.5
4.6
4.3
4.2
4.4
4.1

## COUPLING D.12XD.24 FT115 KIT (4178600)

| Item | Article no. | Description | Quantity |
|---|---|---|---|
| 4.1 | | COUPLING-M+ Ø12XØ24-FT115-MACHINED | 1 |
| 4.2 | 2131023 | BALL BEARING 6207/ZZ-C3(HT)VP. | 1 |
| 4.3 | 4234254 | CIRCLIP-FOR-SHAFT-D35x1.5 VP. | 1 |
| 4.4 | 4157726 | SCREW KIT M8X30 (4 PIECES) | 1 |
| 4.5 | 4234251 | CIRCLIP-D72x2.5 VP. | 1 |
| 4.6 | 4234246 | O-RING 72X3 VP. | 1 |
| | | NOMEL CONTACT WASHER 8x16x1,4 STEEL ZC | 1 |

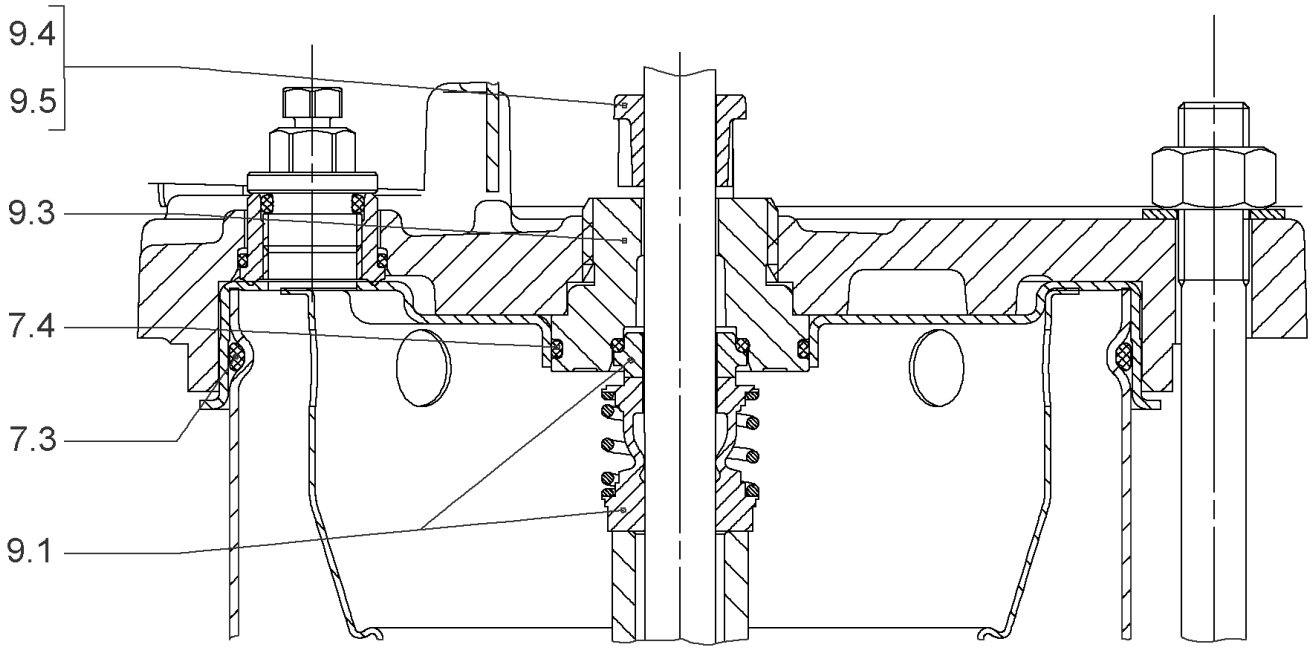
9.4
9.5
9.3
7.4
7.3
9.1

## SEAL-KIT-HELIX2-4 O/E KIT (4178564)

| Item | Article no. | Description | Quantity |
|---|---|---|---|
| 7.3 | 4176513 | O-RING FOR PUMP JACKET VP. | 1 |
| 7.4 | 2127603 | O-RING ID.37,6x2,4 EPDM VP. | 1 |
| 9.1 | 4178563 | M.SEAL.HELIX2-4 O/E VP. | 1 |
| 9.3 | 4178561 | RING HOLDER Ø22 1.4301 VP. | 1 |
| 9.5 | 4178562 | DRIVE RING D.22/12.2X10 MACH.VP. | 1 |
| 9.4 | 4176520 | SCREW CH M5x5 A4-70 ( 3PIECES ) | 1 |

13.3
13.3
13.2
13.3
13.3
13.3
13.3
13.3
13.3
13.2
13.1
11
10
9
8
7
6
5
4
3
2
1

| Item | Article no. | Description | Quantity |
|---|---|---|---|
| 13.1 | 4179316 | STAGE HELIX 2 1.4301 KIT | 1 |
| | | > MACH.STG-CASING-WOGV-WNR-M+2-4-304 | 1 |
| | | > IMPELLER-M+2-304 | 1 |
| 13.2 | 4179317 | STAGE BEARING HELIX 2 1.4307 KIT | 1 |
| | | > MACH.BEARING-STG-CASING-WNR-M+2-304 | 1 |
| | | > IMPELLER-M+2-304 | 1 |
| | | > SHAFT SLEEVE SPACER Ø15,35x10,305-304 | 1 |
| | | > SHAFT-SLEEVE-D12xD16x14-CW | 1 |
| 13.3 | 4179319 | INTERMEDIATE STAGE HELIX 2 1.4301 KIT | 1 |
| | | > CORPS-ETG-STD-ACR-AJR-USIN.M+2-304 | 1 |
| | | > IMPELLER-M+2-304 | 1 |
| | | > IMPELLER SPACER Ø12,05X14,85-L24,285-304 | 1 |

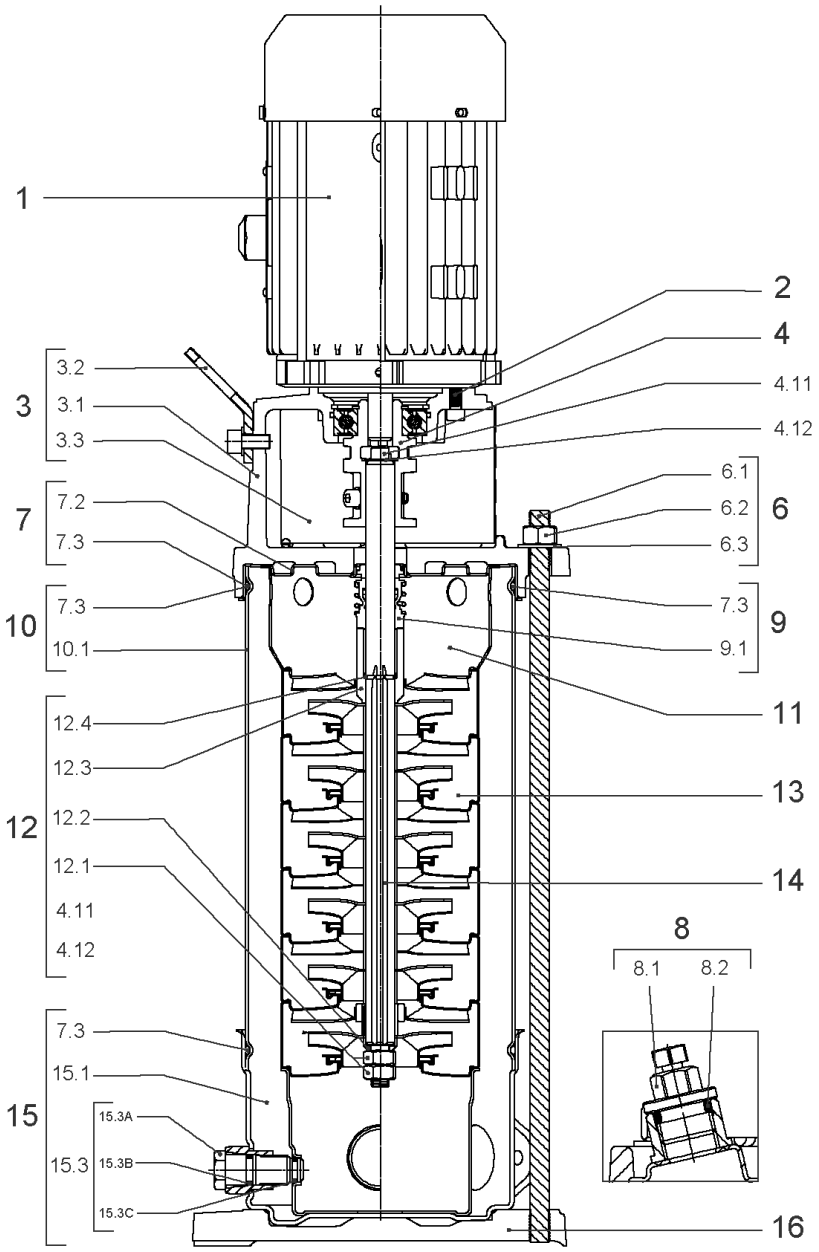
1
2
4
4.11
4.12
3
3.2
3.1
3.3
7
7.2
7.3
10
7.3
10.1
6
6.1
6.2
6.3
9
7.3
9.1
11
12
12.4
12.3
12.2
12.1
4.11
4.12
13
14
8
8.1
8.2
15
7.3
15.1
15.3
15.3A
15.3B
15.3C
16

## HELIX VE211-1/16/E/S (4201566)

| Item | Article no. | Description | Quantity |
|---|---|---|---|
| 1 | | DRIVE HELIX-VE211-IE4-WE KIT | 1 |
| Note: MOTOR BRAND WILO ELEC | | | |
| | | SPARE PARTS MOTOR:ON REQUEST | 1 |
| 2 | 4159707 | SCREW M8X30 (4 PIECES) | 1 |
| 3 | 4213784 | LANTERN FT115 HELIX KIT | 1 |
| 3.1 | | > LANT-MOT-VMI-ReDTC6"-FT115-MACHINED+CATA | 1 |
| 3.2 | 4184852 | > EYELET CPL.FT HELIX (2 PIECES) | 1 |
| 3.3 | 4213782 | > COUPLING PROTECTOR FT115/130 HELIX KIT | 1 |
| 4 | 4178600 | COUPLING D.12XD.24 FT115 KIT | 1 |
| 6 | 4178605 | STUD BOLT M12X469 KIT | 1 |
| 6.1 | | > TIE BOLT M12-469x18x30-1.4057 | 1 |
| 6.2 | 2094647 | > NUT M12 M12 ISO4032 VP. | 1 |
| 6.3 | 2123557 | > WASHER CS-12.4-24-1.6-NFE25 (4 PIECES) | 1 |
| 7 | 4212722 | STATIONARY RING HOLDER HELIX D23 ReDTC | 1 |
| 7.2 | 4212720 | > STATIONARY RING HOLDER HELIX D23 VP. | 1 |
| 7.3 | 4176513 | > O-RING FOR PUMP JACKET VP. | 1 |
| 8 | 4212724 | FILING/PURGING PLUG HELIX ReDTC KIT | 1 |
| 8.1 | | > FILLING PLUG MVI6"-304 | 1 |
| 8.2 | 4177800 | > O-RING EPDM PLUG HELIX VP. | 1 |
| 9 | 4212726 | MECH.SEAL HELIX V2/4 O/E ReDTC KIT | 1 |
| 9.1 | 4178563 | > M.SEAL.HELIX2-4 O/E VP. | 1 |
| 7.3 | 4176513 | > O-RING FOR PUMP JACKET VP. | 1 |
| 10 | 4178606 | HOUSING-PIPE D.152X335 1.4304 KIT | 1 |
| 7.3 | 4176513 | > O-RING FOR PUMP JACKET VP. | 1 |
| 10.1 | | > HOUSING-PIPE Ø152-M+211/411-304 | 1 |
| 11 | 4179315 | CENTERING STAGE HELIX V2 1.4307 VP. | 1 |
| 12 | 4212729 | SHAFT EQUIPMENT HELIX V2/4 ReDTC KIT | 1 |
| 12.1 | | > NUT-H-M8-STAINLESS-STEEL A4-70 | 1 |
| 12.2 | | > SHAFT END WASHER Ø8/Ø12 316L | 1 |
| 12.3 | | > 1/2-SNAP-RING-2/4M3-316L | 1 |
| 12.4 | | > STOP-RUSH-1/2-D12xd2-M+316 | 1 |
| 4.11 | | > SCREW CHC-M6X14-8.8-ISO4762-GEOMET500A | 1 |
| 4.12 | | > WASHER D.24 L6U ZINK | 1 |
| 13 | | HYDRAULIC HELIX V 211 1.4307 | 1 |

| Item | Article no. | Description | Quantity |
|---|---|---|---|
| 14 | 4213776 | SHAFT D.12X406 HELIX 1.4057 VP. | 1 |
| 15 | 4174079 | PUMP HOUSING HELIX DN32 PN16 1.4301 KIT | 1 |
| 7.3 | 4176513 | > O-RING FOR PUMP JACKET VP. | 1 |
| 15.1 | | > BLASTING PPE HOUSING V-PN16-DN32-5"-304 | 1 |
| 15.2 | 4217889 | > COUNTER FLANGE-G1"-PN16-GJL KIT | 1 |
| 15.3 | 4171321 | > PRIMING/DRAIN PLUG EPDM HELIX KIT | 1 |
| 16 | 4177964 | BASEPLATE HELIX V2/4/6 PN16 VP. | 1 |

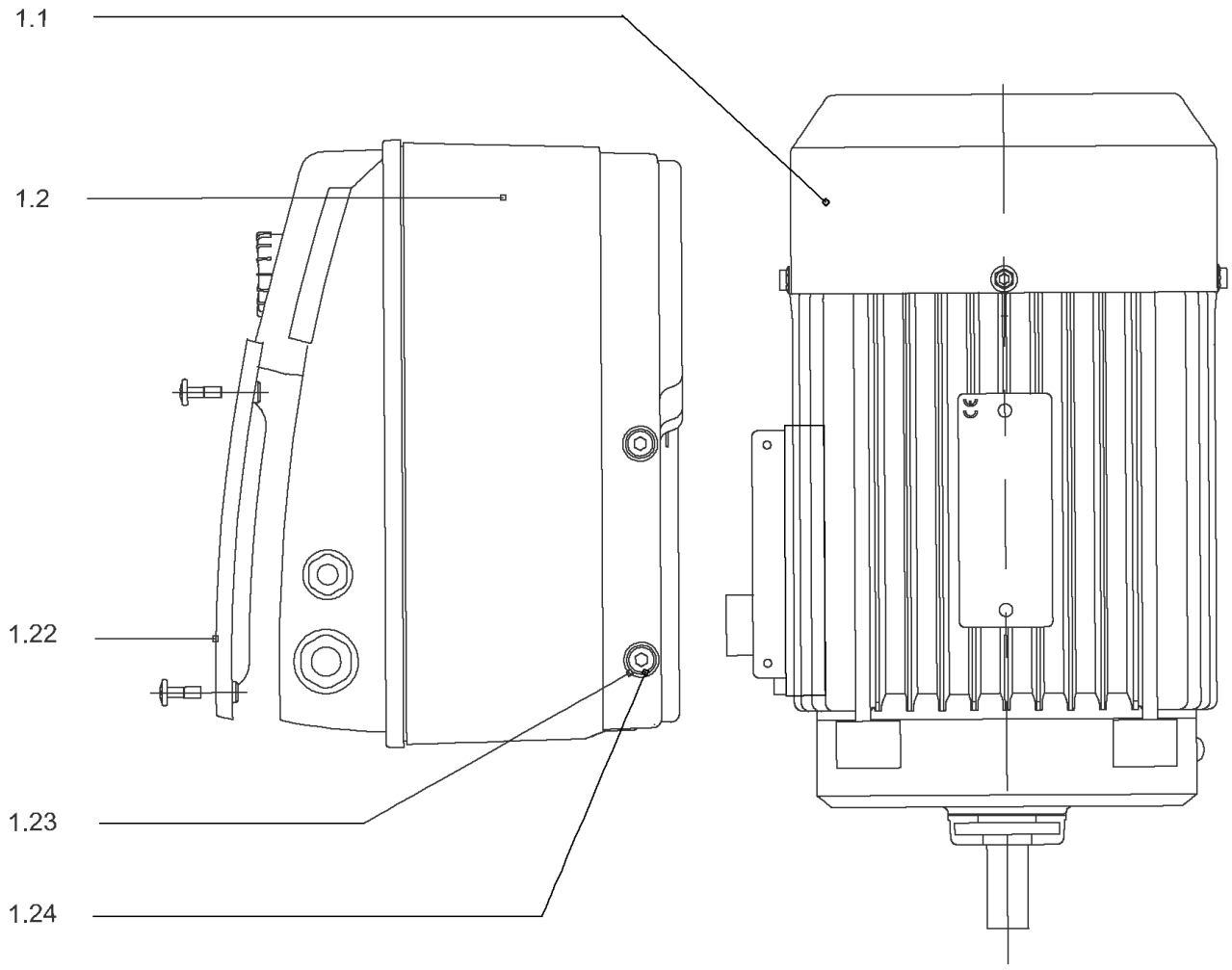
1.1
1.2
1.22
1.23
1.24

## DRIVE HELIX-VE211-IE4-WE KIT

| Item | Article no. | Description | Quantity |
|---|---|---|---|
| 1.1 | 4207918 | MOTOR 1.5/2/90 3~ 380V 60HZ IE4 WE VP. | 1 |
| | | SPARE PARTS MOTOR:ON REQUEST | 1 |
| 1.2 | 4213729 | MODULE HELIX-VE211-IE4-WE KIT | 1 |
| 1.22 | 2054227 | > MODULE COVER/GASKET TL3/4 KIT | 1 |
| 1.23 | 4215716 | > SCREW M5X16 DIN912 8.8 A2A (4pieces) VP. | 1 |
| 1.24 | 2057978 | > RONDELLE A5,3 DIN6797 FST ZN (4 PIECES) | 1 |

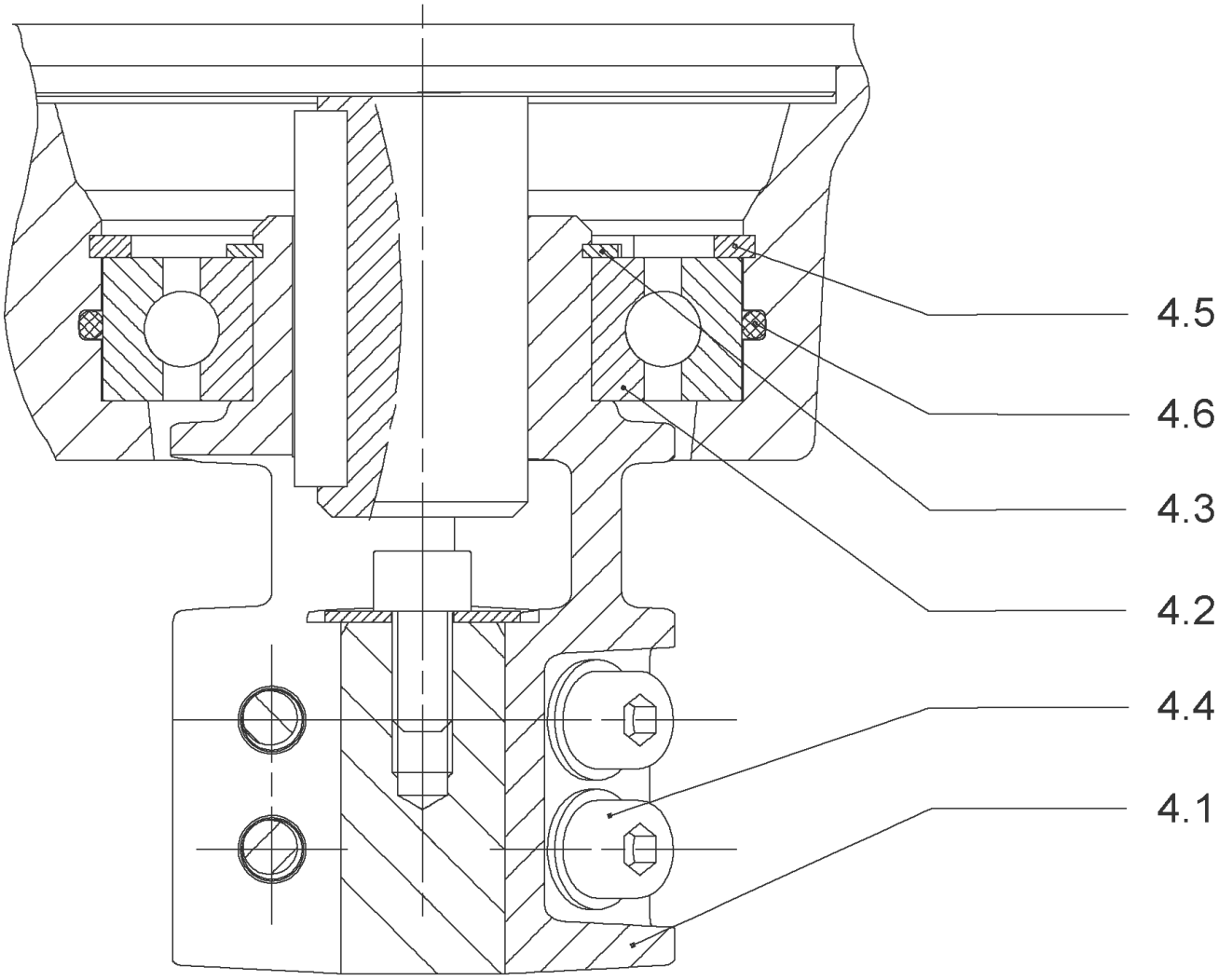
4.5
4.6
4.3
4.2
4.4
4.1

## COUPLING D.12XD.24 FT115 KIT (4178600)

| Item | Article no. | Description | Quantity |
|---|---|---|---|
| 4.1 | | COUPLING-M+ Ø12XØ24-FT115-MACHINED | 1 |
| 4.2 | 2131023 | BALL BEARING 6207/ZZ-C3(HT)VP. | 1 |
| 4.3 | 4234254 | CIRCLIP-FOR-SHAFT-D35x1.5 VP. | 1 |
| 4.4 | 4157726 | SCREW KIT M8X30 (4 PIECES) | 1 |
| 4.5 | 4234251 | CIRCLIP-D72x2.5 VP. | 1 |
| 4.6 | 4234246 | O-RING 72X3 VP. | 1 |
| | | NOMEL CONTACT WASHER 8x16x1,4 STEEL ZC | 1 |

13.3
13.3
13.2
13.3
13.3
13.3
13.3
13.3
13.3
13.2
13.1
11
10
9
8
7
6
5
4
3
2
1

| Item | Article no. | Description | Quantity |
|---|---|---|---|
| 13.1 | 4179316 | STAGE HELIX 2 1.4301 KIT | 1 |
| | | > MACH.STG-CASING-WOGV-WNR-M+2-4-304 | 1 |
| | | > IMPELLER-M+2-304 | 1 |
| 13.2 | 4179317 | STAGE BEARING HELIX 2 1.4307 KIT | 1 |
| | | > MACH.BEARING-STG-CASING-WNR-M+2-304 | 1 |
| | | > IMPELLER-M+2-304 | 1 |
| | | > SHAFT SLEEVE SPACER Ø15,35x10,305-304 | 1 |
| | | > SHAFT-SLEEVE-D12xD16x14-CW | 1 |
| 13.3 | 4179319 | INTERMEDIATE STAGE HELIX 2 1.4301 KIT | 1 |
| | | > CORPS-ETG-STD-ACR-AJR-USIN.M+2-304 | 1 |
| | | > IMPELLER-M+2-304 | 1 |
| | | > IMPELLER SPACER Ø12,05X14,85-L24,285-304 | 1 |

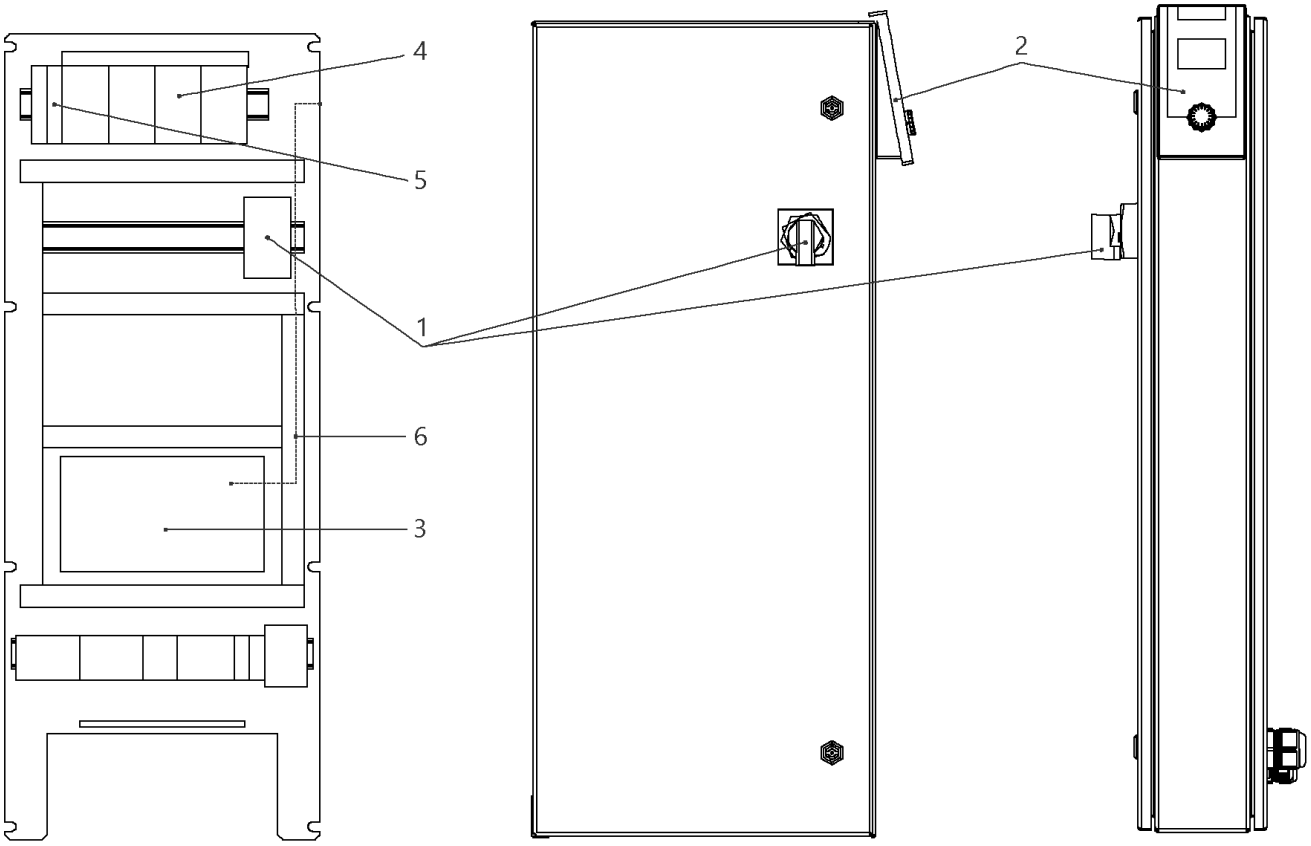
4
5
1
6
3
2

## W-CTRL-SCE-B-4x10A-T34-FM-ND1-AVC-PKG (2541915)

| Item | Article no. | Description | Quantity |
|---|---|---|---|
| 1 | 2104473 | MAIN SWITCH OT63F3 L105 KIT | 1 |
| 2 | 4184784 | CONTROL PANEL HMI SC KIT | 1 |
| 2 | 4185259 | ASSEMBLY DISPLAY SC PKG VP. | 1 |
| Note: DISPLAY ALONE / PLATINE SEULE | | | |
| 3 | 4185257 | ASSEMBLY CPU SCe Booster VP. | 1 |
| 5 | 2046288 | CIRCUIT BREAKER S201 B16 | 1 |
| 4 | 2119861 | AUTOMATIC CIRCUIT BREAKER S203 B13 3POL. | 1 |
| 6 | 4197081 | CABLE RJ45 CAT6 0,5M RED SC-PANEL VP. | 1 |

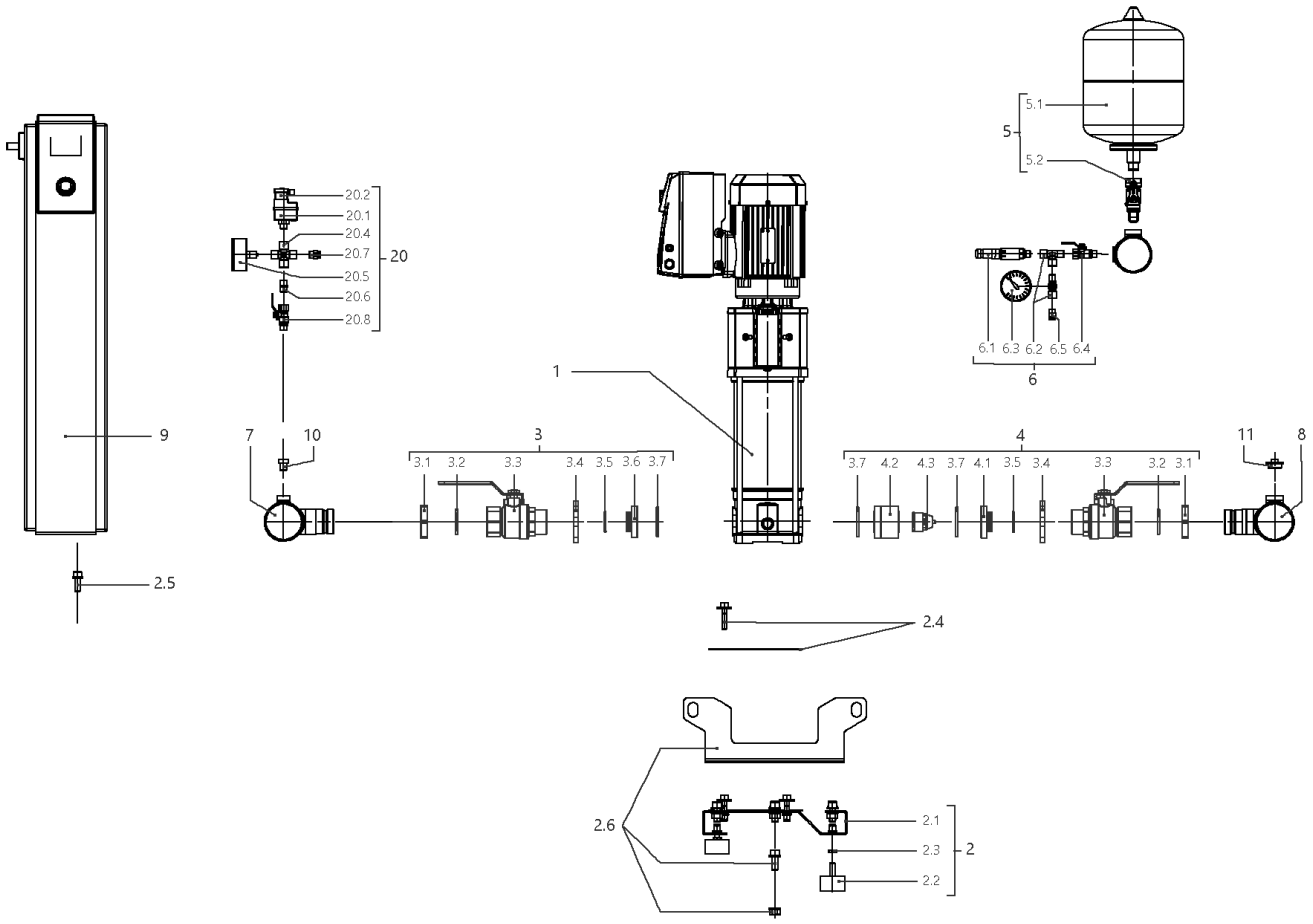
5.1
5
5.2
20.2
20.1
20.4
20.7
20
20.5
20.6
20.8
6.1 6.3 6.2 6.5 6.4
6
1
9
7
10
3
3.1 3.2 3.3 3.4 3.5 3.6 3.7
4
3.7 4.2 4.3 3.7 4.1 3.5 3.4 3.3 3.2 3.1
11
8
2.5
2.4
2.6
2.1
2.3
2
2.2

## SiBoost Smart 4HELIX VE403 (2537346)

| Item | Article no. | Description | Quantity |
|---|---|---|---|
| 1 | | HELIX VE403-1/16/E/S | 1 |
| Note: TO / BIS / JUSQU'AU 31/03/2016 | | | |
| 1 | 4201567 | HELIX VE403-1/16/E/S | 1 |
| Note: FROM / AB / À PARTIR DU 01/04/2016 | | | |
| 2 | 4200143 | BASE PLATE DE4 1450x300 KIT | 1 |
| 2.1 | | > BASEPLATE_4x4/6/10V_E300_1450x300BOX_150 | 1 |
| 2.2 | 2028654 | > VIBRATION DAMPER D.50X30 M10X28 | 1 |
| 2.3 | 2028281 | > NUT M10 DIN936 (ISO4035) 17H VZ | 1 |
| 2.4 | 4199875 | > HOLDER PUMP Siboost Helix V2/4 KIT | 1 |
| 2.5 | 4197084 | > HOLDER SWITCHBOX WILO Smart Control KIT | 1 |
| 2.6 | 4197085 | > LIFTING Siboost HELIX SC KIT | 1 |
| 3 | 4199876 | SUCTION SIDE Siboost Helix V2/4/6 KIT | 1 |
| 3.1 | 2032610 | > NUT G11/4 MS VP. | 1 |
| 3.2 | 2032611 | > O-RING ID.36,09X3,53N DIN3771 E7502 | 1 |
| 3.3 | 2507646 | > BALL VALVE G11/4"M-F-W.HANDLE 1/4-TURN | 1 |
| 3.4 | 2032613 | > SCREWED FLANGE G1 1/4" LK-75 ST37VZ | 1 |
| 3.5 | 2032614 | > O-RING ID.29,82X2,62N DIN3771 E7502 | 1 |
| 3.6 | 2032615 | > SPACER F.I/A KUH.DN32 CUZN | 1 |
| 3.7 | 2032616 | > O-RING ID.44X3,53N DIN3771 E7502 | 1 |
| 4 | 4199877 | DELIVERY SIDE Siboost Helix V2/4/6 KIT | 1 |
| 3.1 | 2032610 | > NUT G11/4 MS VP. | 1 |
| 3.2 | 2032611 | > O-RING ID.36,09X3,53N DIN3771 E7502 | 1 |
| 3.3 | 2507646 | > BALL VALVE G11/4"M-F-W.HANDLE 1/4-TURN | 1 |
| 3.4 | 2032613 | > SCREWED FLANGE G1 1/4" LK-75 ST37VZ | 1 |
| 3.5 | 2032614 | > O-RING ID.29,82X2,62N DIN3771 E7502 | 1 |
| 4.1 | 2058116 | > SPACER F.I/A KUH.DN32 CUZN | 1 |
| 3.7 | 2032616 | > O-RING ID.44X3,53N DIN3771 E7502 | 1 |
| 4.2 | 2058115 | > HOUSING RFV(RV-IN) DN32 SGS/DRS | 1 |
| 4.3 | 2027870 | > NON-RETURN-DEVICE INSERT DN32(MTR) | 1 |
| 5 | 2032642 | DIAPHREM TANK 8L/PN16 DIN4807/T5 KIT | 1 |
| 5.1 | 2045914 | > DIAPHREM TANK 8L TYP-DD 16BAR | 1 |
| 5.2 | 2027853 | > FLOW FITTING G3/4 FOR DIAPHRAGM VES. | 1 |
| 6 | 4197076 | PRESSURE SENSOR/ GAUGE 0-16BAR KIT | 1 |
| 6.1 | 2085909 | > PRESS.SENSOR 1/4" 0-16BAR 4-20MA VP. | 1 |

| Item | Article no. | Description | Quantity |
|---|---|---|---|
| 6.2 | 4197077 | > T-PIECE 1/4" VP. | 1 |
| 6.3 | 2028692 | > PRESSURE GAUGE NG63-PN16-G1/4 | 1 |
| 6.4 | 2028291 | > BALL TAP R1/4" PN42 GIACOMINI R254DL | 1 |
| 6.5 | 2028691 | > BLOWGUN 1/4" MS 30BAR VP. | 1 |
| 7 | 4200144 | PIPE DE4 21/2''-4x11/4"+2x1/4x900 VP. | 1 |
| 8 | 4200145 | PIPE DE4 21/2''-4x11/4"+2x1/4+1x3/4x900 | 1 |
| 9 | | W-CTRL-SCE-B-4x0,55-1,5KW-T4-FM-ND1 | 1 |
| Note: TO / BIS / JUSQU'AU 18/05/2014 | | | |
| 9 | 2541915 | W-CTRL-SCE-B-4x10A-T34-FM-ND1-AVC-PKG | 1 |
| Note: FROM / AB / À PARTIR DU 19/05/2014 | | | |
| 10 | 4197079 | PLUG G1/4"x10 AISI304 KIT | 1 |
| 11 | 2032654 | PLUG R3/4" MS VIEGA 1751 | 1 |
| 20 | | ASSEMBLY WMS. DE-EB. +VP | 1 |
| 20.1 | 2028652 | > PRESSURE SWITCH PS3-ASR 1/(1,3) VP. | 1 |
| 20.2 | 2130983 | > PLUG PS3-415 WITH KABEL 1,5M 2NO VP. | 1 |
| 20.4 | 2028290 | > CROSSPIECE R1/4" MS-NICKEL | 1 |
| 20.5 | 2028687 | > PRESSURE GAUGE NG63 R1/4" HI.0-6BAR | 1 |
| 20.6 | 2054268 | > DUAL NIPPLE G1/4" x G1/4" MS VP. | 1 |
| 20.7 | 2028691 | > BLOWGUN 1/4" MS 30BAR VP. | 1 |
| 20.8 | 2028291 | > BALL TAP R1/4" PN42 GIACOMINI R254DL | 1 |

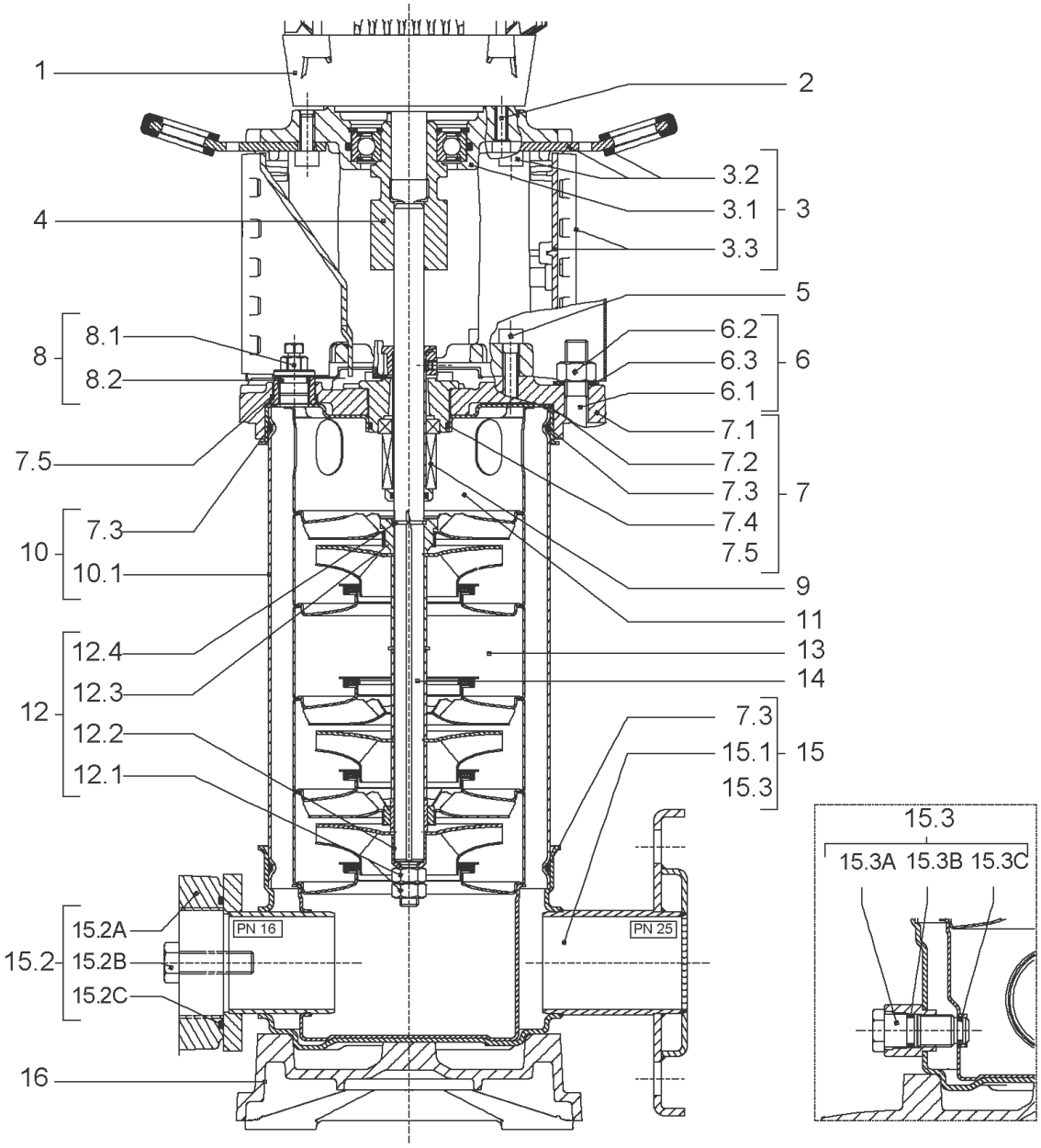
1
2
3.2
3.1
3
3.3
4
5
8.1
8
8.2
6.2
6.3
6
6.1
7.1
7.5
7.2
7.3
7
7.4
7.3
10
7.5
10.1
9
11
12.4
13
12.3
14
12
12.2
7.3
15.1
15
12.1
15.3
15.3
15.3A 15.3B 15.3C
15.2A
PN 16
PN 25
15.2
15.2B
15.2C
16

| Item | Article no. | Description | Quantity |
|---|---|---|---|
| 1 | | DRIVE HELIX-VE403-IE2-WE KIT | 1 |
| Note: MOTOR BRAND WILO ELEC | | | |
| 1 | | DRIVE HELIX-VE403-IE4-WE KIT | 1 |
| Note: MOTOR BRAND WILO ELEC | | | |
| 2 | 4159702 | SCREW M6X30 (4 PIECES) | 1 |
| 3 | 4171325 | LANTERN MONOBLOC FT85 HELIX KIT | 1 |
| 3.1 | | > M+5_6_LANTERN_ONE-PIECE_FT85_CATA | 1 |
| 3.2 | 2127604 | > EYELET CPL.FT HELIX(2 PIECES) | 1 |
| 3.3 | 4159692 | > COUPLING PROTECTOR FT HELIX KIT | 1 |
| 4 | 4178554 | COUPLING FT 85 Ø12XØ14 KIT | 1 |
| 5 | 4159707 | SCREW M8X30 (4 PIECES) | 1 |
| 6 | 4177803 | STUD BOLT M12X263 KIT | 1 |
| 6.1 | | > TIE BOLT M12-263x18x30-1.4057 | 1 |
| 6.2 | 2094647 | > NUT M12 M12 ISO4032 VP. | 1 |
| 6.3 | 2123557 | > WASHER CS-12.4-24-1.6-NFE25 (4 PIECES) | 1 |
| 7 | 4210143 | STATIONARY RING HOLDER HELIX 6" EPDM | 1 |
| 7.2 | 2127607 | > STATIONARY RING HOLDER 6" HELIX 1.4301 V | 1 |
| 7.3 | 4176513 | > O-RING FOR PUMP JACKET VP. | 1 |
| 7.4 | 2127603 | > O-RING ID.37,6x2,4 EPDM VP. | 1 |
| 7.5 | 2127602 | > O-RING ID.21,35x2 EPDM VP. | 1 |
| 8 | 4159686 | FILING/PURGING PLUG HELIX EPDM KIT | 1 |
| 9 | 4178564 | SEAL-KIT-HELIX2-4 O/E KIT | 1 |
| 10 | 4177804 | HOUSING PIPES D.152X134 1.4301 KIT | 1 |
| 7.3 | 4176513 | > O-RING FOR PUMP JACKET VP. | 1 |
| 10.1 | | > HOUSING-PIPE Ø152-M+1001/02-304 | 1 |
| 11 | 4178566 | CENTERING STAGE-RETURN HELIX4 1.4307 VP | 1 |
| 12 | 4178568 | SHAFT EQUIPMENT HELIX V2/V4 KIT | 1 |
| 12.1 | | > NUT-H-M8-STAINLESS-STEEL A4-70 | 2 |
| 12.2 | | > SHAFT END WASHER Ø8/Ø12 316L | 1 |
| 12.3 | | > STOP COLLAR OF IMPELLER M+2/4 SINGLEBLOC | 1 |
| 12.4 | | > STOP-RUSH-1/2-D12xd2-M+316 | 2 |
| 13 | | HYDRAULIC HELIX V 403 1.4307 | 1 |
| 14 | 4178575 | SHAFT D.12X258 1.4301 VP. | 1 |
| 15 | 4174079 | PUMP HOUSING HELIX DN32 PN16 1.4301 KIT | 1 |

| Item | Article no. | Description | Quantity |
|---|---|---|---|
| 7.3 | 4176513 | > O-RING FOR PUMP JACKET VP. | 1 |
| 15.1 | | > BLASTING PPE HOUSING V-PN16-DN32-5"-304 | 1 |
| 15.2 | 4217889 | > COUNTER FLANGE-G1"-PN16-GJL KIT | 1 |
| 15.3 | 4171321 | > PRIMING/DRAIN PLUG EPDM HELIX KIT | 1 |
| 16 | 4177964 | BASEPLATE HELIX V2/4/6 PN16 VP. | 1 |

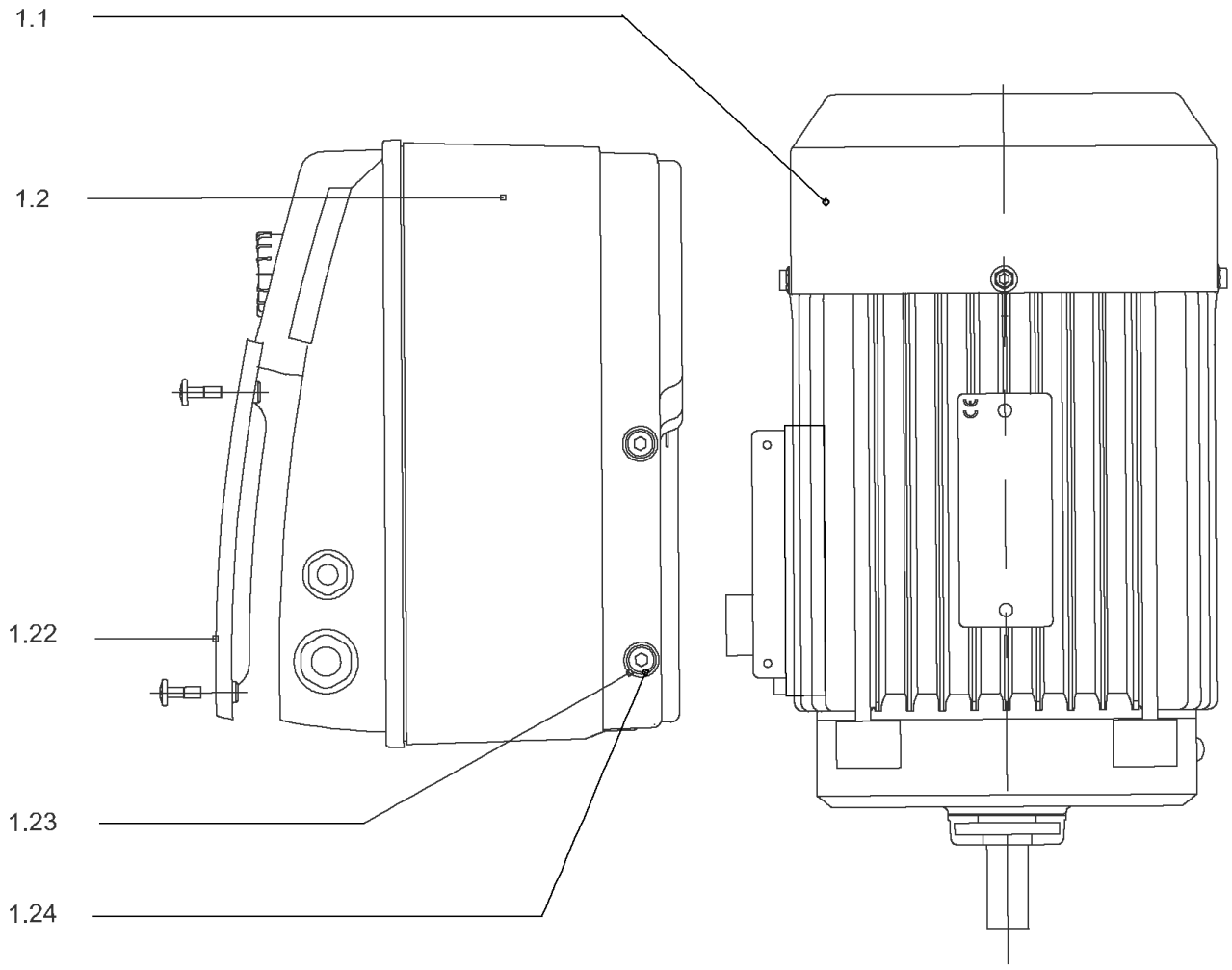
1.1
1.2
1.22
1.23
1.24

## DRIVE HELIX-VE403-IE2-WE KIT

| Item | Article no. | Description | Quantity |
|---|---|---|---|
| 1.1 | | MOTOR 0,55/2/80 3~ 380V 60HZ IE2 WE VP. | 1 |
| Note: no longer available/nicht mehrlieferbar/n'est plus disponible | | | |
| | | SPARE PARTS MOTOR:ON REQUEST | 1 |
| 1.2 | 4184869 | MODULE HELIX-VE403-IE2-WE KIT | 1 |
| 1.22 | 2054372 | > MODULE COVER TL1,TL2+GASKET KIT | 1 |
| 1.23 | 4215716 | > SCREW M5X16 DIN912 8.8 A2A (4pieces) VP. | 1 |
| 1.24 | 2057978 | > RONDELLE A5,3 DIN6797 FST ZN (4 PIECES) | 1 |

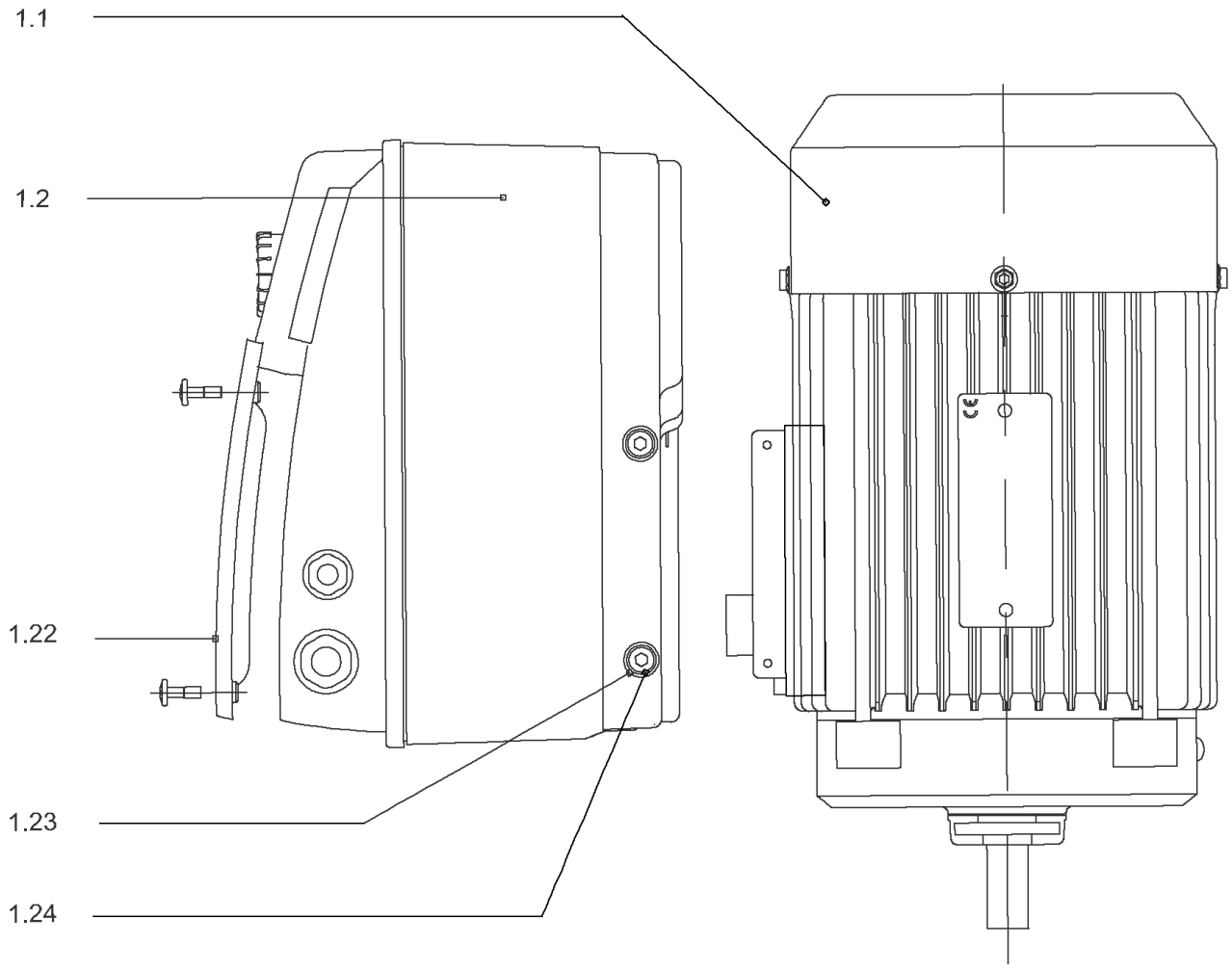
1.1
1.2
1.22
1.23
1.24

## DRIVE HELIX-VE403-IE4-WE KIT

| Item | Article no. | Description | Quantity |
|---|---|---|---|
| 1.1 | 4207912 | MOTOR 0.55/2/71 3~ 380V 60HZ IE4 WE VP. | 1 |
| | | SPARE PARTS MOTOR:ON REQUEST | 1 |
| 1.2 | 4209319 | MODULE HELIX-VE403-IE4-WE KIT | 1 |
| 1.22 | 2054372 | > MODULE COVER TL1,TL2+GASKET KIT | 1 |
| 1.23 | 4215716 | > SCREW M5X16 DIN912 8.8 A2A (4pieces) VP. | 1 |
| 1.24 | 2057978 | > RONDELLE A5,3 DIN6797 FST ZN (4 PIECES) | 1 |

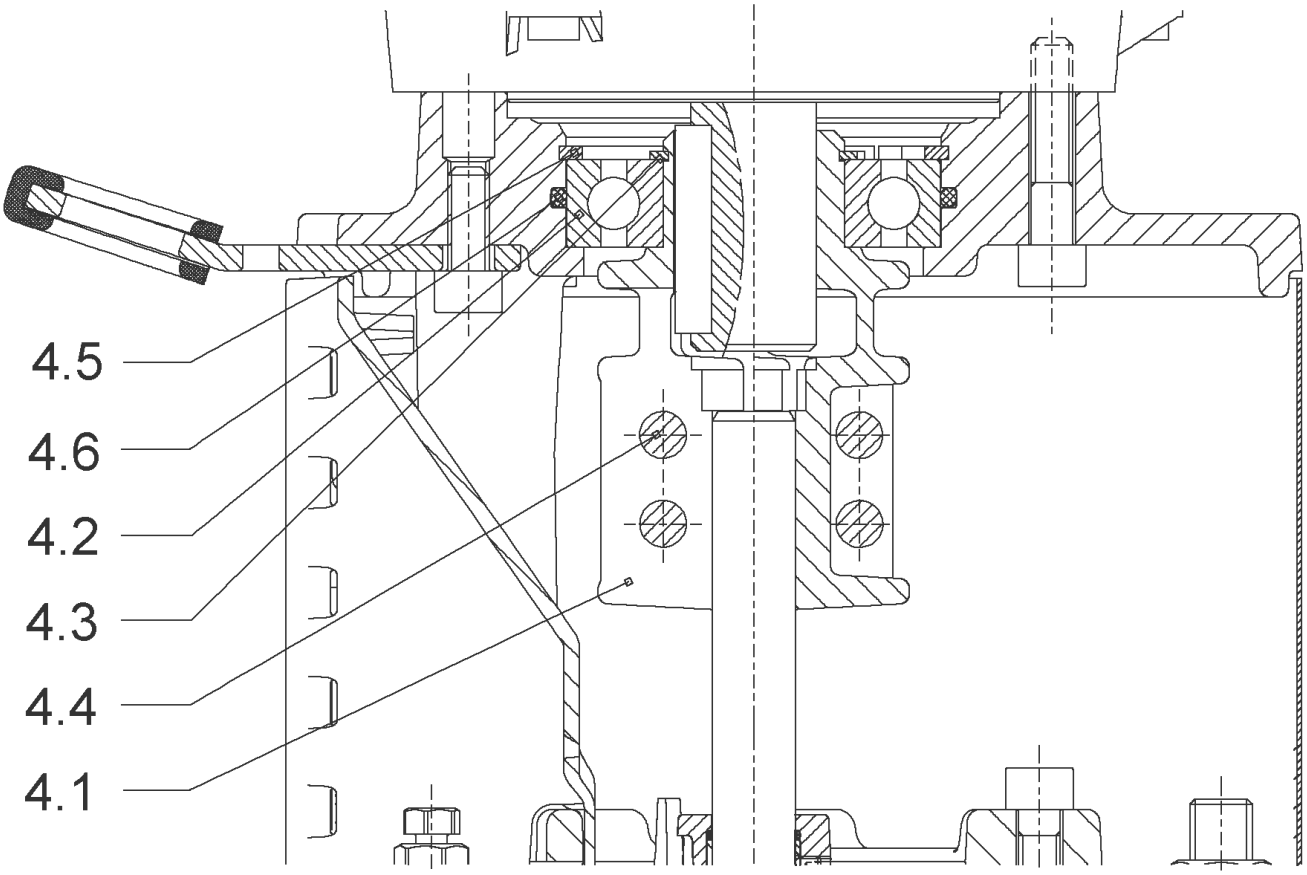
4.5
4.6
4.2
4.3
4.4
4.1

## COUPLING FT 85 Ø12XØ14 KIT (4178554)

| Item | Article no. | Description | Quantity |
|---|---|---|---|
| 4.1 | | COUPLING-M+ Ø12XØ14-FT85-MACHINED | 1 |
| 4.3 | 4208923 | CIRCLIP D25X1.2 VP. | 1 |
| 4.2 | 4177802 | BALL BEARING 6205C3-ZZ HTVP. | 1 |
| 4.4 | 4212716 | SCREW M6X20 KIT (4PIECES) | 1 |
| 4.5 | 4233124 | CIRCLIP-FOR-BORES-D52x2 VP. | 1 |
| 4.6 | 4234244 | O-RING 52X2 VP. | 1 |
| | | CONTACT-WASHER-6ETR-6,1x12,2x1,8-STEEL | 4 |

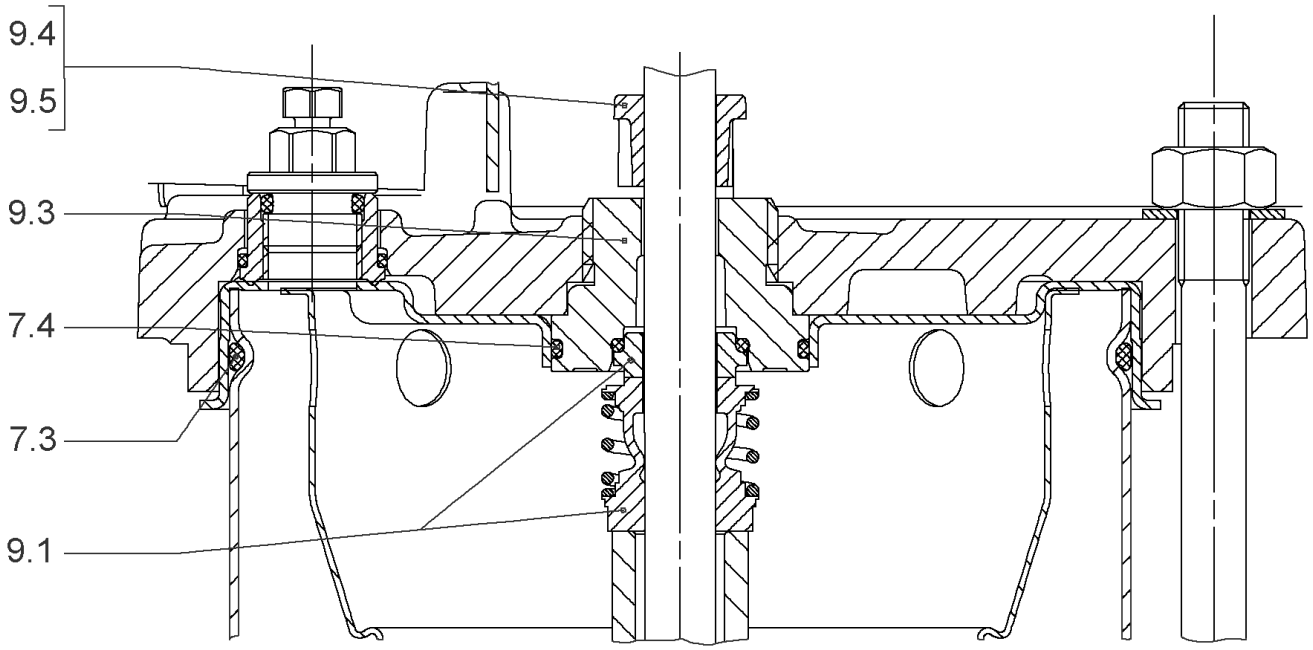
9.4
9.5
9.3
7.4
7.3
9.1

## SEAL-KIT-HELIX2-4 O/E KIT (4178564)

| Item | Article no. | Description | Quantity |
|---|---|---|---|
| 7.3 | 4176513 | O-RING FOR PUMP JACKET VP. | 1 |
| 7.4 | 2127603 | O-RING ID.37,6x2,4 EPDM VP. | 1 |
| 9.1 | 4178563 | M.SEAL.HELIX2-4 O/E VP. | 1 |
| 9.3 | 4178561 | RING HOLDER Ø22 1.4301 VP. | 1 |
| 9.5 | 4178562 | DRIVE RING D.22/12.2X10 MACH.VP. | 1 |
| 9.4 | 4176520 | SCREW CH M5x5 A4-70 ( 3PIECES ) | 1 |

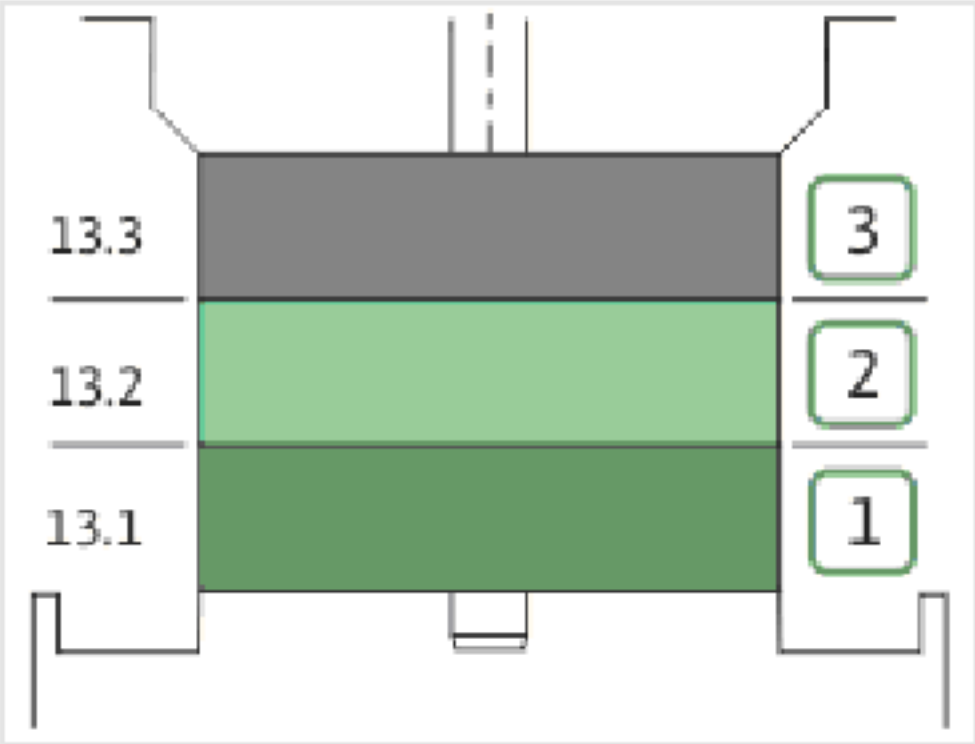
13.3
13.2
13.1
3
2
1

| Item | Article no. | Description | Quantity |
|---|---|---|---|
| 13.1 | 4178570 | STAGE HELIX 4 1.4301 KIT | 1 |
| | | > MACH.STG-CASING-WOGV-WNR-M+2-4-304 | 1 |
| | | > IMPELLER-M+4-304 | 1 |
| 13.2 | 4178569 | STAGE BEARING HELIX 4 1.4301 KIT | 1 |
| | | > MACH.BEARING-STG-CASING-WNR-M+4-304 | 1 |
| | | > IMPELLER-M+4-304 | 1 |
| | | > SHAFT SLEEVE SPACER Ø15,35x10,305-304 | 1 |
| | | > SHAFT-SLEEVE-D12xD16x14-CW | 1 |
| 13.3 | 4178574 | INTER STAGE HELIX4 1.4301< 15 stages KIT | 1 |
| | | > MACH.STD-STG-CASING-WGV+NR-M+4-304 | 1 |
| | | > IMPELLER-M+4-304 | 1 |
| | | > IMPELLER SPACER Ø12,05X14,85-L24,285-304 | 1 |

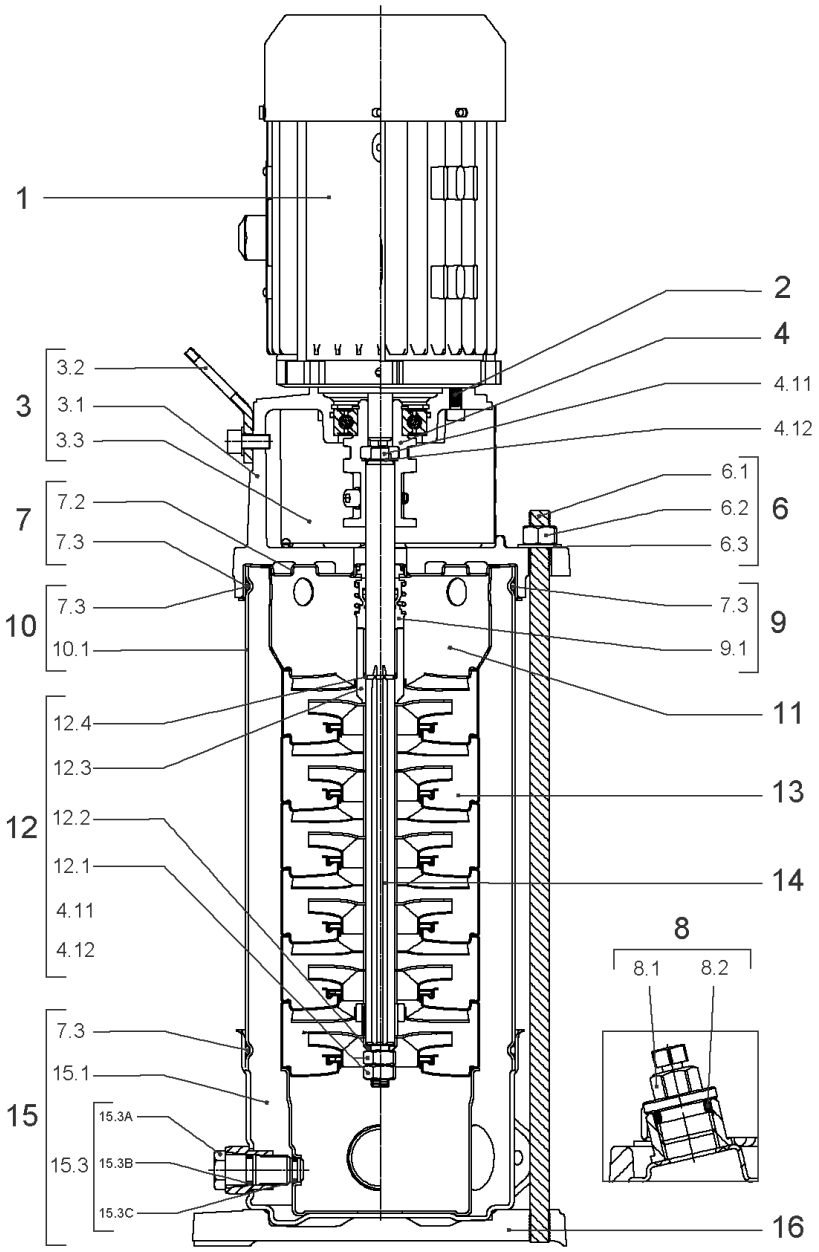
1
2
4
4.11
4.12
3
3.2
3.1
3.3
7
7.2
7.3
10
7.3
10.1
6
6.1
6.2
6.3
9
7.3
9.1
11
12
12.4
12.3
12.2
12.1
4.11
4.12
13
14
8
8.1
8.2
15
7.3
15.1
15.3
15.3A
15.3B
15.3C
16

## HELIX VE403-1/16/E/S (4201567)

| Item | Article no. | Description | Quantity |
|---|---|---|---|
| 1 | | DRIVE HELIX-VE403-IE4-WE KIT | 1 |
| Note: MOTOR BRAND WILO ELEC | | | |
| | | SPARE PARTS MOTOR:ON REQUEST | 1 |
| 2 | 4212716 | SCREW M6X20 KIT (4PIECES) | 1 |
| 3 | 4213715 | LANTERN FT85 HELIX KIT | 1 |
| 3.1 | | > LANT-MOT-VMI-ReDTC6"-FT85-MACHINED+CATA | 1 |
| 3.2 | 4184852 | > EYELET CPL.FT HELIX (2 PIECES) | 1 |
| 3.3 | 4213713 | > COUPLING PROTECTOR FT85/100 HELIX KIT | 1 |
| 4 | 4212718 | COUPLING HELIX D12 FT85 KIT | 1 |
| 6 | 4177803 | STUD BOLT M12X263 KIT | 1 |
| 6.1 | | > TIE BOLT M12-263x18x30-1.4057 | 1 |
| 6.2 | 2094647 | > NUT M12 M12 ISO4032 VP. | 1 |
| 6.3 | 2123557 | > WASHER CS-12.4-24-1.6-NFE25 (4 PIECES) | 1 |
| 7 | 4212722 | STATIONARY RING HOLDER HELIX D23 ReDTC | 1 |
| 7.2 | 4212720 | > STATIONARY RING HOLDER HELIX D23 VP. | 1 |
| 7.3 | 4176513 | > O-RING FOR PUMP JACKET VP. | 1 |
| 8 | 4212724 | FILING/PURGING PLUG HELIX ReDTC KIT | 1 |
| 8.1 | | > FILLING PLUG MVI6"-304 | 1 |
| 8.2 | 4177800 | > O-RING EPDM PLUG HELIX VP. | 1 |
| 9 | 4212726 | MECH.SEAL HELIX V2/4 O/E ReDTC KIT | 1 |
| 9.1 | 4178563 | > M.SEAL.HELIX2-4 O/E VP. | 1 |
| 7.3 | 4176513 | > O-RING FOR PUMP JACKET VP. | 1 |
| 10 | 4177804 | HOUSING PIPES D.152X134 1.4301 KIT | 1 |
| 7.3 | 4176513 | > O-RING FOR PUMP JACKET VP. | 1 |
| 10.1 | | > HOUSING-PIPE Ø152-M+1001/02-304 | 1 |
| 11 | 4178566 | CENTERING STAGE-RETURN HELIX4 1.4307 VP | 1 |
| 12 | 4212729 | SHAFT EQUIPMENT HELIX V2/4 ReDTC KIT | 1 |
| 12.1 | | > NUT-H-M8-STAINLESS-STEEL A4-70 | 1 |
| 12.2 | | > SHAFT END WASHER Ø8/Ø12 316L | 1 |
| 12.3 | | > 1/2-SNAP-RING-2/4M3-316L | 1 |
| 12.4 | | > STOP-RUSH-1/2-D12xd2-M+316 | 1 |
| 4.11 | | > SCREW CHC-M6X14-8.8-ISO4762-GEOMET500A | 1 |
| 4.12 | | > WASHER D.24 L6U ZINK | 1 |
| 13 | | HYDRAULIC HELIX V 403 1.4307 | 1 |

## HELIX VE403-1/16/E/S (4201567)

| Item | Article no. | Description | Quantity |
|---|---|---|---|
| 15 | 4174079 | PUMP HOUSING HELIX DN32 PN16 1.4301 KIT | 1 |
| 7.3 | 4176513 | > O-RING FOR PUMP JACKET VP. | 1 |
| 15.1 | | > BLASTING PPE HOUSING V-PN16-DN32-5"-304 | 1 |
| 15.2 | 4217889 | > COUNTER FLANGE-G1"-PN16-GJL KIT | 1 |
| 15.3 | 4171321 | > PRIMING/DRAIN PLUG EPDM HELIX KIT | 1 |
| 16 | 4177964 | BASEPLATE HELIX V2/4/6 PN16 VP. | 1 |

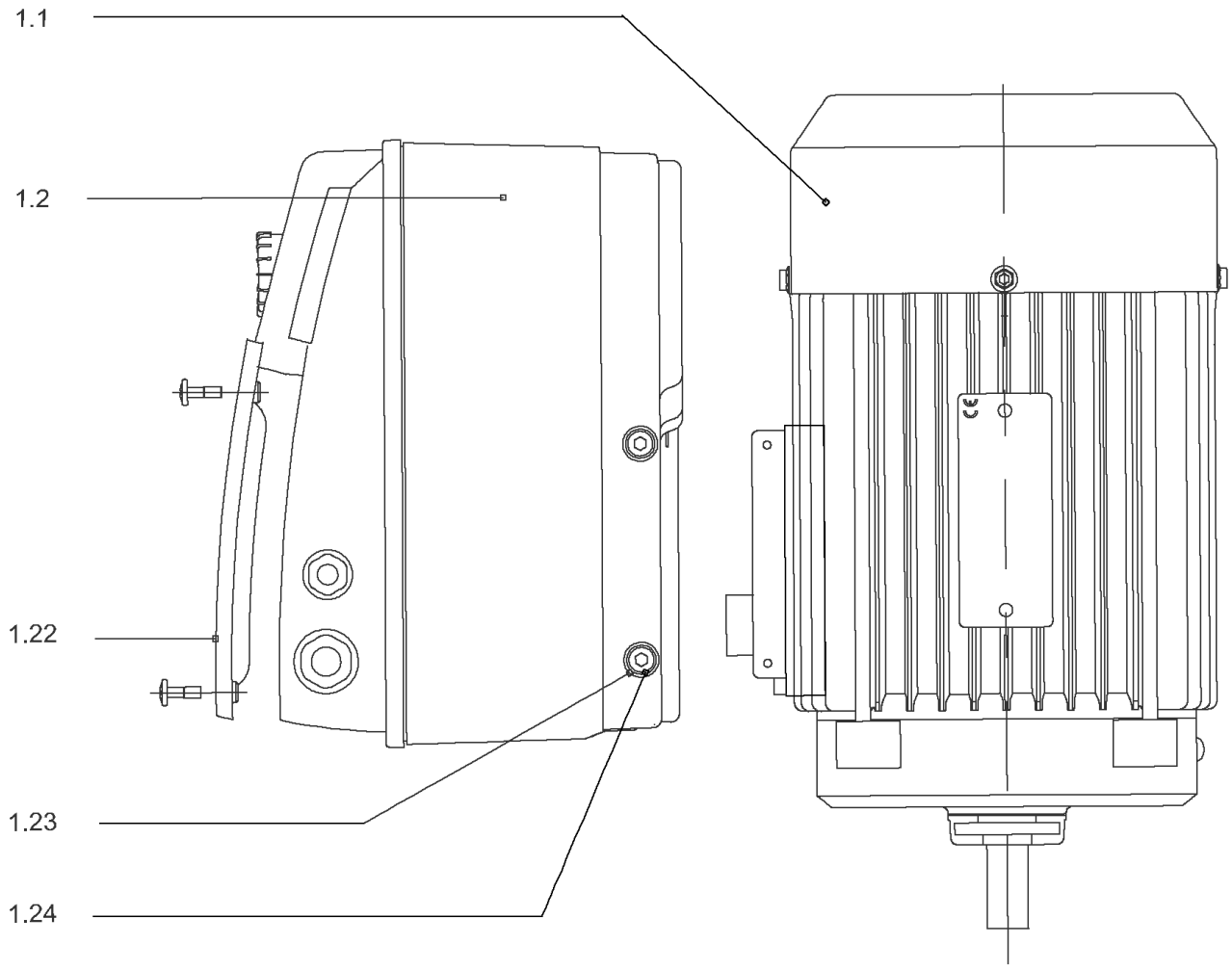
1.1
1.2
1.22
1.23
1.24

## DRIVE HELIX-VE403-IE4-WE KIT

| Item | Article no. | Description | Quantity |
|---|---|---|---|
| 1.1 | 4207912 | MOTOR 0.55/2/71 3~ 380V 60HZ IE4 WE VP. | 1 |
| | | SPARE PARTS MOTOR:ON REQUEST | 1 |
| 1.2 | 4209319 | MODULE HELIX-VE403-IE4-WE KIT | 1 |
| 1.22 | 2054372 | > MODULE COVER TL1,TL2+GASKET KIT | 1 |
| 1.23 | 4215716 | > SCREW M5X16 DIN912 8.8 A2A (4pieces) VP. | 1 |
| 1.24 | 2057978 | > RONDELLE A5,3 DIN6797 FST ZN (4 PIECES) | 1 |

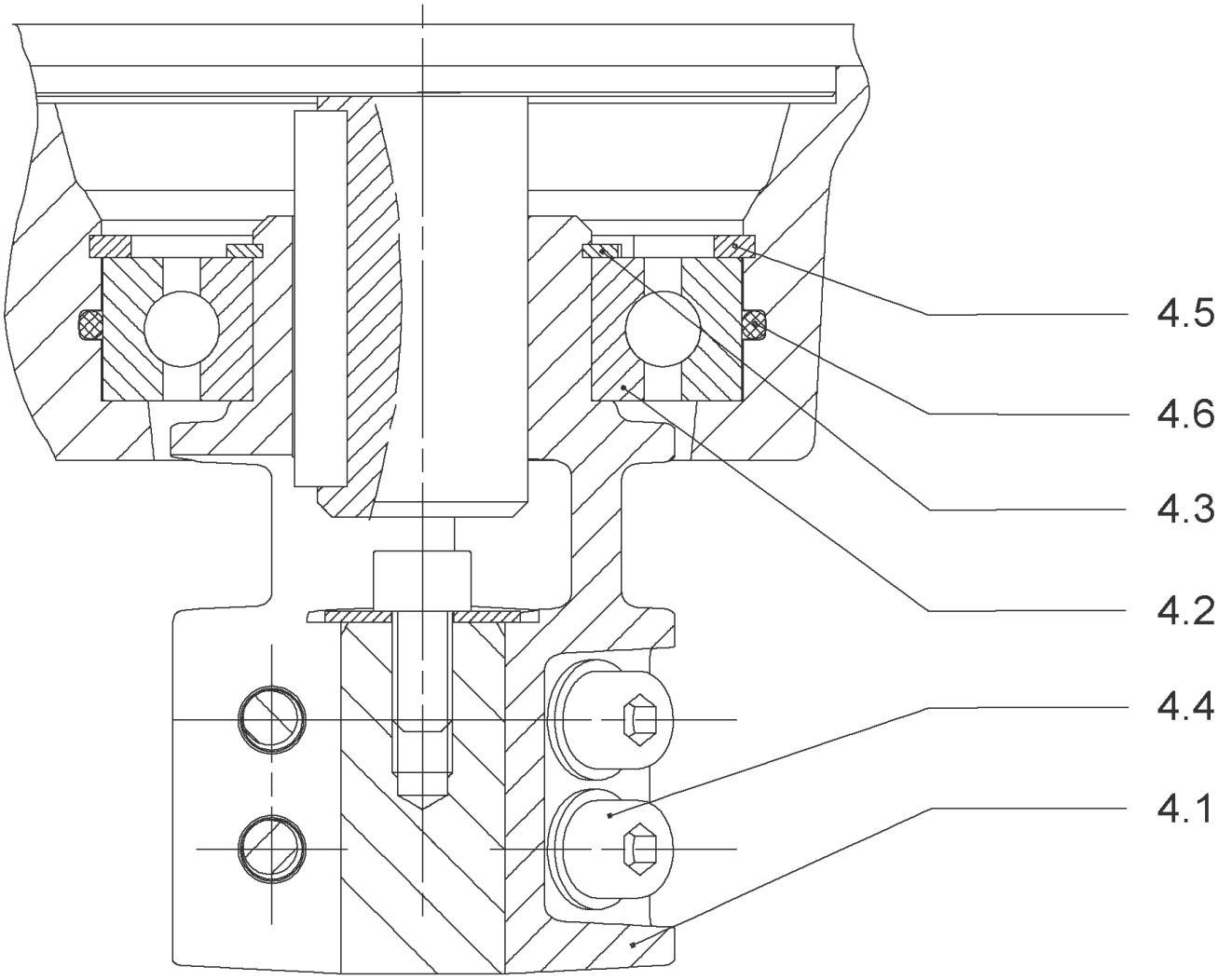
4.5
4.6
4.3
4.2
4.4
4.1

## COUPLING HELIX D12 FT85 KIT (4212718)

| Item | Article no. | Description | Quantity |
|---|---|---|---|
| 4.1 | | COUPLING-VMI-Ø12xØ14-FT85-USINE | 1 |
| 4.2 | 4177802 | BALL BEARING 6205C3-ZZ HTVP. | 1 |
| 4.3 | 4208923 | CIRCLIP D25X1.2 VP. | 1 |
| 4.4 | 4212716 | SCREW M6X20 KIT (4PIECES) | 1 |
| 4.5 | 4233124 | CIRCLIP-FOR-BORES-D52x2 VP. | 1 |
| 4.6 | 4234244 | O-RING 52X2 VP. | 1 |
| | | CONTACT-WASHER-6ETR-6,1x12,2x1,8-STEEL | 1 |

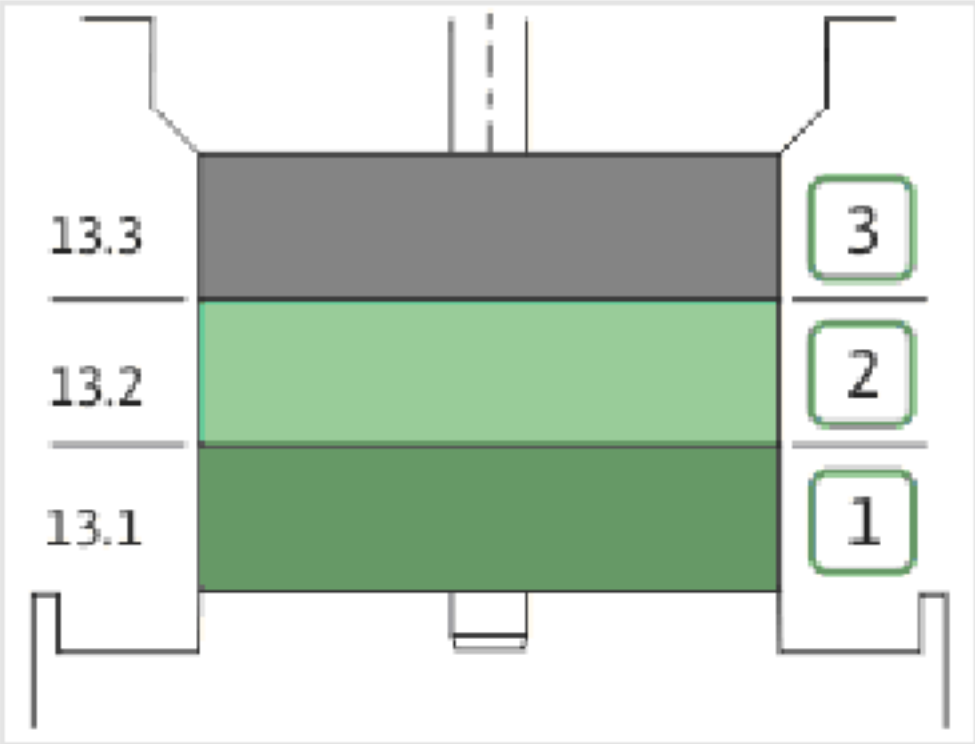
13.3
13.2
13.1
3
2
1

| Item | Article no. | Description | Quantity |
|---|---|---|---|
| 13.1 | 4178570 | STAGE HELIX 4 1.4301 KIT | 1 |
| | | > MACH.STG-CASING-WOGV-WNR-M+2-4-304 | 1 |
| | | > IMPELLER-M+4-304 | 1 |
| 13.2 | 4178569 | STAGE BEARING HELIX 4 1.4301 KIT | 1 |
| | | > MACH.BEARING-STG-CASING-WNR-M+4-304 | 1 |
| | | > IMPELLER-M+4-304 | 1 |
| | | > SHAFT SLEEVE SPACER Ø15,35x10,305-304 | 1 |
| | | > SHAFT-SLEEVE-D12xD16x14-CW | 1 |
| 13.3 | 4178574 | INTER STAGE HELIX4 1.4301< 15 stages KIT | 1 |
| | | > MACH.STD-STG-CASING-WGV+NR-M+4-304 | 1 |
| | | > IMPELLER-M+4-304 | 1 |
| | | > IMPELLER SPACER Ø12,05X14,85-L24,285-304 | 1 |

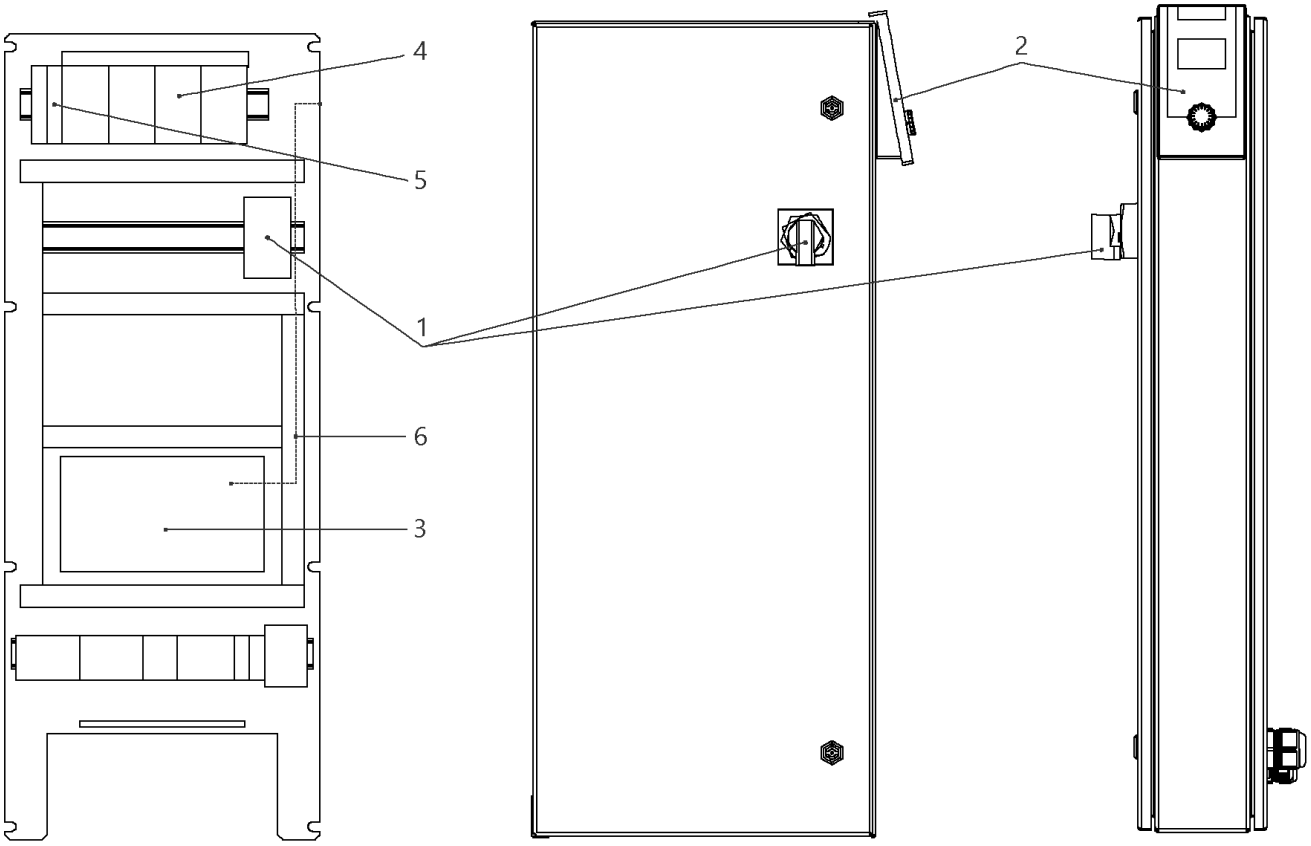
4
5
1
6
3
2

## W-CTRL-SCE-B-4x0,55-1,5KW-T4-FM-ND1

| Item | Article no. | Description | Quantity |
|---|---|---|---|
| 1 | 2104470 | MAIN SWITCH OT40F3 L250 KIT | 1 |
| 2 | 4184784 | CONTROL PANEL HMI SC KIT | 1 |
| 2 | 4185259 | ASSEMBLY DISPLAY SC PKG VP. | 1 |
| 3 | 4185257 | ASSEMBLY CPU SCe Booster VP. | 1 |
| 4 | 2051217 | AUTOM.CIRCUIT BREAKER S203 B16 TO7,5kW | 1 |
| 5 | 2046288 | CIRCUIT BREAKER S201 B16 | 1 |
| 6 | 4197081 | CABLE RJ45 CAT6 0,5M RED SC-PANEL VP. | 1 |

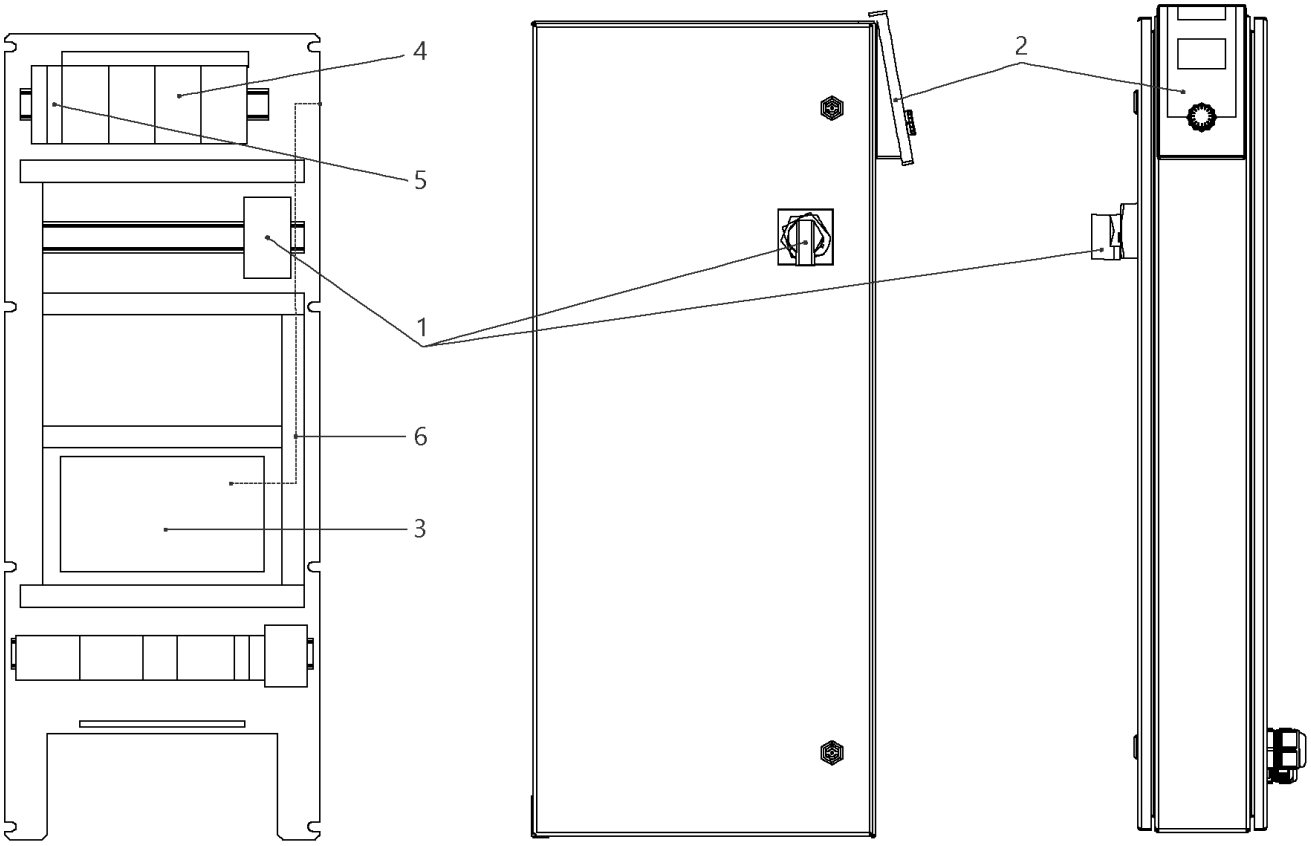
4
5
1
6
3
2

## W-CTRL-SCE-B-4x10A-T34-FM-ND1-AVC-PKG (2541915)

| Item | Article no. | Description | Quantity |
|---|---|---|---|
| 1 | 2104473 | MAIN SWITCH OT63F3 L105 KIT | 1 |
| 2 | 4184784 | CONTROL PANEL HMI SC KIT | 1 |
| 2 | 4185259 | ASSEMBLY DISPLAY SC PKG VP. | 1 |
| Note: DISPLAY ALONE / PLATINE SEULE | | | |
| 3 | 4185257 | ASSEMBLY CPU SCe Booster VP. | 1 |
| 5 | 2046288 | CIRCUIT BREAKER S201 B16 | 1 |
| 4 | 2119861 | AUTOMATIC CIRCUIT BREAKER S203 B13 3POL. | 1 |
| 6 | 4197081 | CABLE RJ45 CAT6 0,5M RED SC-PANEL VP. | 1 |

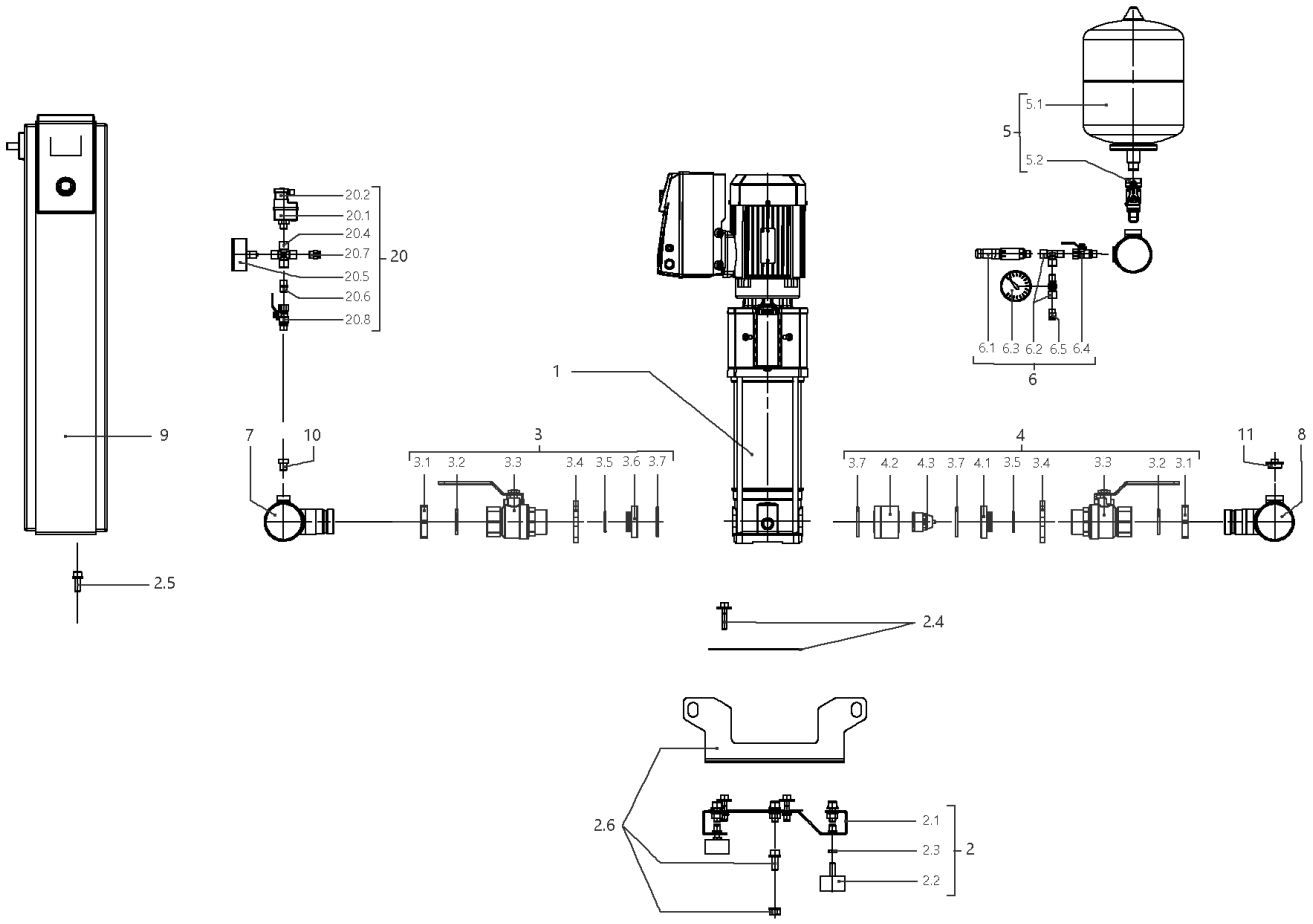
5.1
5
5.2
20.2
20.1
20.4
20.7
20
20.5
20.6
20.8
6.1 6.3 6.2 6.5 6.4
6
1
9
7
10
3
3.1 3.2 3.3 3.4 3.5 3.6 3.7
4
3.7 4.2 4.3 3.7 4.1 3.5 3.4 3.3 3.2 3.1
11
8
2.5
2.4
2.6
2.1
2.3
2
2.2

## SiBoost Smart 4HELIX VE404 (2537360)

| Item | Article no. | Description | Quantity |
|---|---|---|---|
| 1 | | HELIX VE404-1/16/E/S | 1 |
| Note: TO / BIS / JUSQU'AU 31/03/2016 | | | |
| 1 | 4201569 | HELIX VE404-1/16/E/S | 1 |
| Note: FROM / AB / À PARTIR DU 01/04/2016 | | | |
| 2 | 4200143 | BASE PLATE DE4 1450x300 KIT | 1 |
| 2.1 | | > BASEPLATE_4x4/6/10V_E300_1450x300BOX_150 | 1 |
| 2.2 | 2028654 | > VIBRATION DAMPER D.50X30 M10X28 | 1 |
| 2.3 | 2028281 | > NUT M10 DIN936 (ISO4035) 17H VZ | 1 |
| 2.4 | 4199875 | > HOLDER PUMP Siboost Helix V2/4 KIT | 1 |
| 2.5 | 4197084 | > HOLDER SWITCHBOX WILO Smart Control KIT | 1 |
| 2.6 | 4197085 | > LIFTING Siboost HELIX SC KIT | 1 |
| 3 | 4199876 | SUCTION SIDE Siboost Helix V2/4/6 KIT | 1 |
| 3.1 | 2032610 | > NUT G11/4 MS VP. | 1 |
| 3.2 | 2032611 | > O-RING ID.36,09X3,53N DIN3771 E7502 | 1 |
| 3.3 | 2507646 | > BALL VALVE G11/4"M-F-W.HANDLE 1/4-TURN | 1 |
| 3.4 | 2032613 | > SCREWED FLANGE G1 1/4" LK-75 ST37VZ | 1 |
| 3.5 | 2032614 | > O-RING ID.29,82X2,62N DIN3771 E7502 | 1 |
| 3.6 | 2032615 | > SPACER F.I/A KUH.DN32 CUZN | 1 |
| 3.7 | 2032616 | > O-RING ID.44X3,53N DIN3771 E7502 | 1 |
| 4 | 4199877 | DELIVERY SIDE Siboost Helix V2/4/6 KIT | 1 |
| 3.1 | 2032610 | > NUT G11/4 MS VP. | 1 |
| 3.2 | 2032611 | > O-RING ID.36,09X3,53N DIN3771 E7502 | 1 |
| 3.3 | 2507646 | > BALL VALVE G11/4"M-F-W.HANDLE 1/4-TURN | 1 |
| 3.4 | 2032613 | > SCREWED FLANGE G1 1/4" LK-75 ST37VZ | 1 |
| 3.5 | 2032614 | > O-RING ID.29,82X2,62N DIN3771 E7502 | 1 |
| 4.1 | 2058116 | > SPACER F.I/A KUH.DN32 CUZN | 1 |
| 3.7 | 2032616 | > O-RING ID.44X3,53N DIN3771 E7502 | 1 |
| 4.2 | 2058115 | > HOUSING RFV(RV-IN) DN32 SGS/DRS | 1 |
| 4.3 | 2027870 | > NON-RETURN-DEVICE INSERT DN32(MTR) | 1 |
| 5 | 2032642 | DIAPHREM TANK 8L/PN16 DIN4807/T5 KIT | 1 |
| 5.1 | 2045914 | > DIAPHREM TANK 8L TYP-DD 16BAR | 1 |
| 5.2 | 2027853 | > FLOW FITTING G3/4 FOR DIAPHRAGM VES. | 1 |
| 6 | 4197076 | PRESSURE SENSOR/ GAUGE 0-16BAR KIT | 1 |
| 6.1 | 2085909 | > PRESS.SENSOR 1/4" 0-16BAR 4-20MA VP. | 1 |

| Item | Article no. | Description | Quantity |
|---|---|---|---|
| 6.2 | 4197077 | > T-PIECE 1/4" VP. | 1 |
| 6.3 | 2028692 | > PRESSURE GAUGE NG63-PN16-G1/4 | 1 |
| 6.4 | 2028291 | > BALL TAP R1/4" PN42 GIACOMINI R254DL | 1 |
| 6.5 | 2028691 | > BLOWGUN 1/4" MS 30BAR VP. | 1 |
| 7 | 4200144 | PIPE DE4 21/2''-4x11/4"+2x1/4x900 VP. | 1 |
| 8 | 4200145 | PIPE DE4 21/2''-4x11/4"+2x1/4+1x3/4x900 | 1 |
| 9 | | W-CTRL-SCE-B-4x0,55-1,5KW-T4-FM-ND1 | 1 |
| Note: TO / BIS / JUSQU'AU 18/05/2014 | | | |
| 9 | 2541915 | W-CTRL-SCE-B-4x10A-T34-FM-ND1-AVC-PKG | 1 |
| Note: FROM / AB / À PARTIR DU 19/05/2014 | | | |
| 10 | 4197079 | PLUG G1/4"x10 AISI304 KIT | 1 |
| 11 | 2032654 | PLUG R3/4" MS VIEGA 1751 | 1 |
| 20 | | ASSEMBLY WMS. DE-EB. +VP | 1 |
| 20.1 | 2028652 | > PRESSURE SWITCH PS3-ASR 1/(1,3) VP. | 1 |
| 20.2 | 2130983 | > PLUG PS3-415 WITH KABEL 1,5M 2NO VP. | 1 |
| 20.4 | 2028290 | > CROSSPIECE R1/4" MS-NICKEL | 1 |
| 20.5 | 2028687 | > PRESSURE GAUGE NG63 R1/4" HI.0-6BAR | 1 |
| 20.6 | 2054268 | > DUAL NIPPLE G1/4" x G1/4" MS VP. | 1 |
| 20.7 | 2028691 | > BLOWGUN 1/4" MS 30BAR VP. | 1 |
| 20.8 | 2028291 | > BALL TAP R1/4" PN42 GIACOMINI R254DL | 1 |

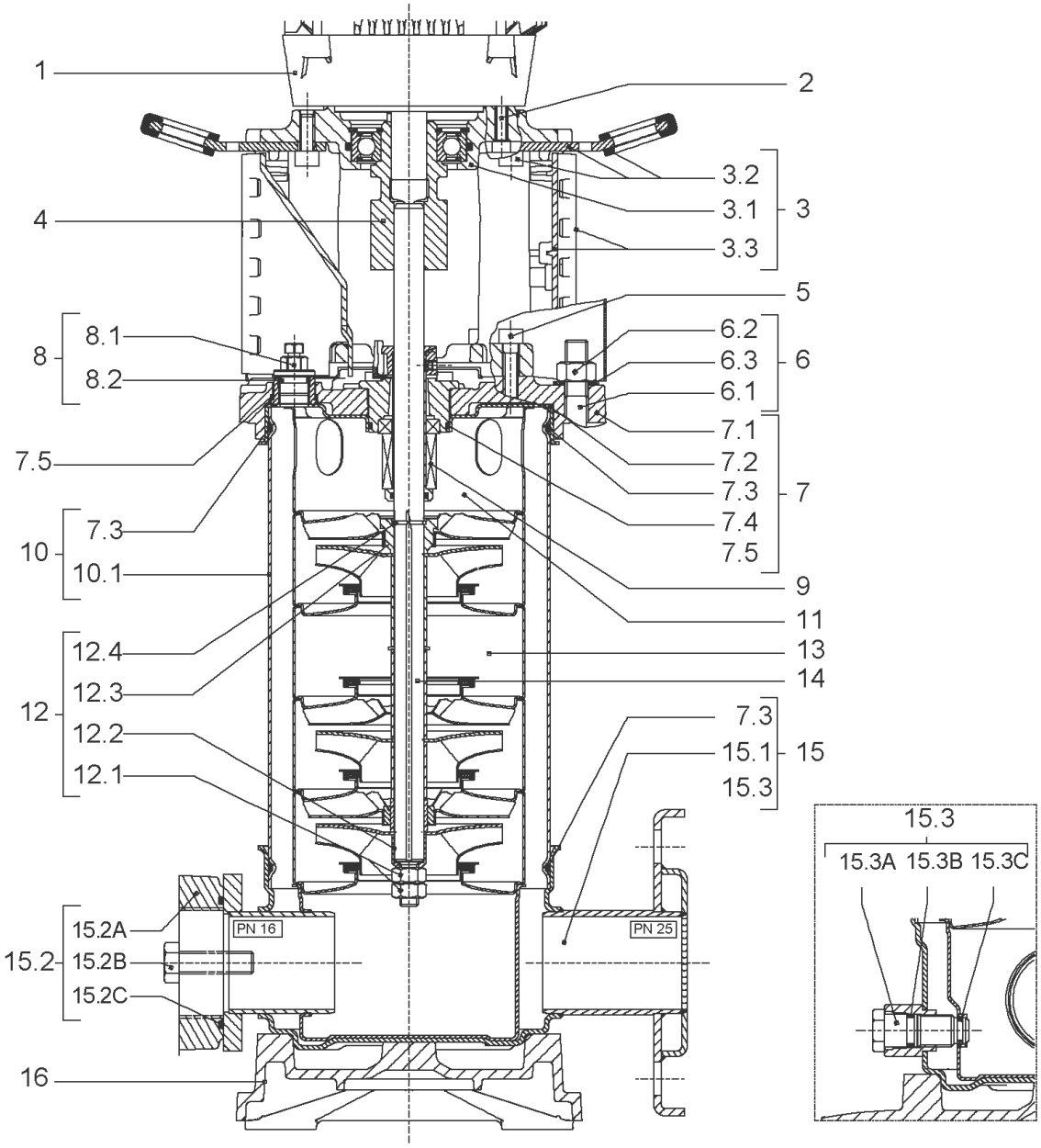
1
2
3.2
3.1
3
3.3
4
5
8.1
8
8.2
6.2
6.3
6
6.1
7.1
7.5
7.2
7.3
7
7.4
7.3
10
7.5
10.1
9
11
12.4
13
12.3
14
12
12.2
7.3
15.1
15
12.1
15.3
15.3
15.3A 15.3B 15.3C
15.2A
PN 16
PN 25
15.2
15.2B
15.2C
16

| Item | Article no. | Description | Quantity |
|---|---|---|---|
| 1 | | DRIVE HELIX-VE404-IE2-WE KIT | 1 |
| Note: MOTOR BRAND WILO ELEC | | | |
| 1 | | DRIVE HELIX-VE404-IE4-WE KIT | 1 |
| Note: MOTOR BRAND WILO ELEC | | | |
| 2 | 4159702 | SCREW M6X30 (4 PIECES) | 1 |
| 3 | 4172790 | EQUIPED LANTERN NEXIS FT 100 KIT | 1 |
| 3.1 | | > M+5_6_LANTERN_ONE-PIECE_FT100_CATA | 1 |
| 3.2 | 2127604 | > EYELET CPL.FT HELIX(2 PIECES) | 1 |
| 3.3 | 4159692 | > COUPLING PROTECTOR FT HELIX KIT | 1 |
| 4 | 4178578 | COUPLING D.12XD.19 FT100 KIT | 1 |
| 5 | 4159707 | SCREW M8X30 (4 PIECES) | 1 |
| 6 | 2018368 | STUD BOLT M12X289 KIT | 1 |
| 6.1 | | > TIE BOLT M12-289x18x30-1.4057 | 1 |
| 6.2 | 2094647 | > NUT M12 M12 ISO4032 VP. | 1 |
| 6.3 | 2123557 | > WASHER CS-12.4-24-1.6-NFE25 (4 PIECES) | 1 |
| 7 | 4210143 | STATIONARY RING HOLDER HELIX 6" EPDM | 1 |
| 7.2 | 2127607 | > STATIONARY RING HOLDER 6" HELIX 1.4301 V | 1 |
| 7.3 | 4176513 | > O-RING FOR PUMP JACKET VP. | 1 |
| 7.4 | 2127603 | > O-RING ID.37,6x2,4 EPDM VP. | 1 |
| 7.5 | 2127602 | > O-RING ID.21,35x2 EPDM VP. | 1 |
| 8 | 4159686 | FILING/PURGING PLUG HELIX EPDM KIT | 1 |
| 9 | 4178564 | SEAL-KIT-HELIX2-4 O/E KIT | 1 |
| 10 | 2127574 | HOUSING PIPE D.152x160 1.4301 KIT | 1 |
| 7.3 | 4176513 | > O-RING FOR PUMP JACKET VP. | 1 |
| 10.1 | | > HOUSING-PIPE Ø152-M+1601/02-304 | 1 |
| 11 | 4178566 | CENTERING STAGE-RETURN HELIX4 1.4307 VP | 1 |
| 12 | 4178568 | SHAFT EQUIPMENT HELIX V2/V4 KIT | 1 |
| 12.1 | | > NUT-H-M8-STAINLESS-STEEL A4-70 | 2 |
| 12.2 | | > SHAFT END WASHER Ø8/Ø12 316L | 1 |
| 12.3 | | > STOP COLLAR OF IMPELLER M+2/4 SINGLEBLOC | 1 |
| 12.4 | | > STOP-RUSH-1/2-D12xd2-M+316 | 2 |
| 13 | | HYDRAULIC HELIX V 404 1.4307 | 1 |
| 14 | 4178576 | SHAFT D.12X283 1.4301 VP. | 1 |
| 15 | 4174079 | PUMP HOUSING HELIX DN32 PN16 1.4301 KIT | 1 |

| Item | Article no. | Description | Quantity |
|---|---|---|---|
| 7.3 | 4176513 | > O-RING FOR PUMP JACKET VP. | 1 |
| 15.1 | | > BLASTING PPE HOUSING V-PN16-DN32-5"-304 | 1 |
| 15.2 | 4217889 | > COUNTER FLANGE-G1"-PN16-GJL KIT | 1 |
| 15.3 | 4171321 | > PRIMING/DRAIN PLUG EPDM HELIX KIT | 1 |
| 16 | 4177964 | BASEPLATE HELIX V2/4/6 PN16 VP. | 1 |

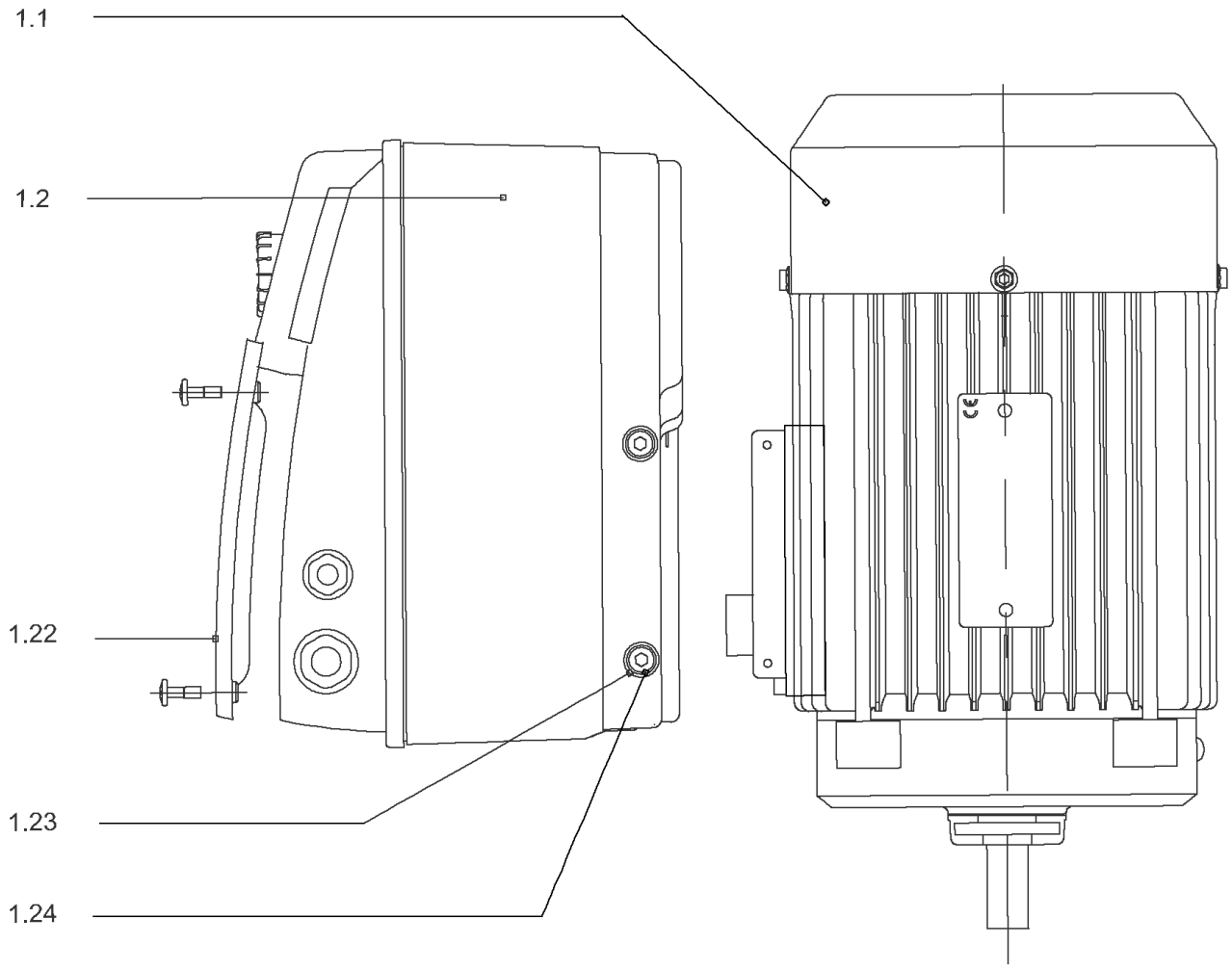
1.1
1.2
1.22
1.23
1.24

## DRIVE HELIX-VE404-IE2-WE KIT

| Item | Article no. | Description | Quantity |
|---|---|---|---|
| 1.1 | | MOTOR 0,75/2/80 3~ 380V 60HZ IE2 WE VP. | 1 |
| Note: no longer available/nicht mehrlieferbar/n'est plus disponible | | | |
| | | SPARE PARTS MOTOR:ON REQUEST | 1 |
| 1.2 | 4190192 | MODULE HELIX-VE404-IE2-WE KIT | 1 |
| 1.22 | 2054372 | > MODULE COVER TL1,TL2+GASKET KIT | 1 |
| 1.23 | 4215716 | > SCREW M5X16 DIN912 8.8 A2A (4pieces) VP. | 1 |
| 1.24 | 2057978 | > RONDELLE A5,3 DIN6797 FST ZN (4 PIECES) | 1 |

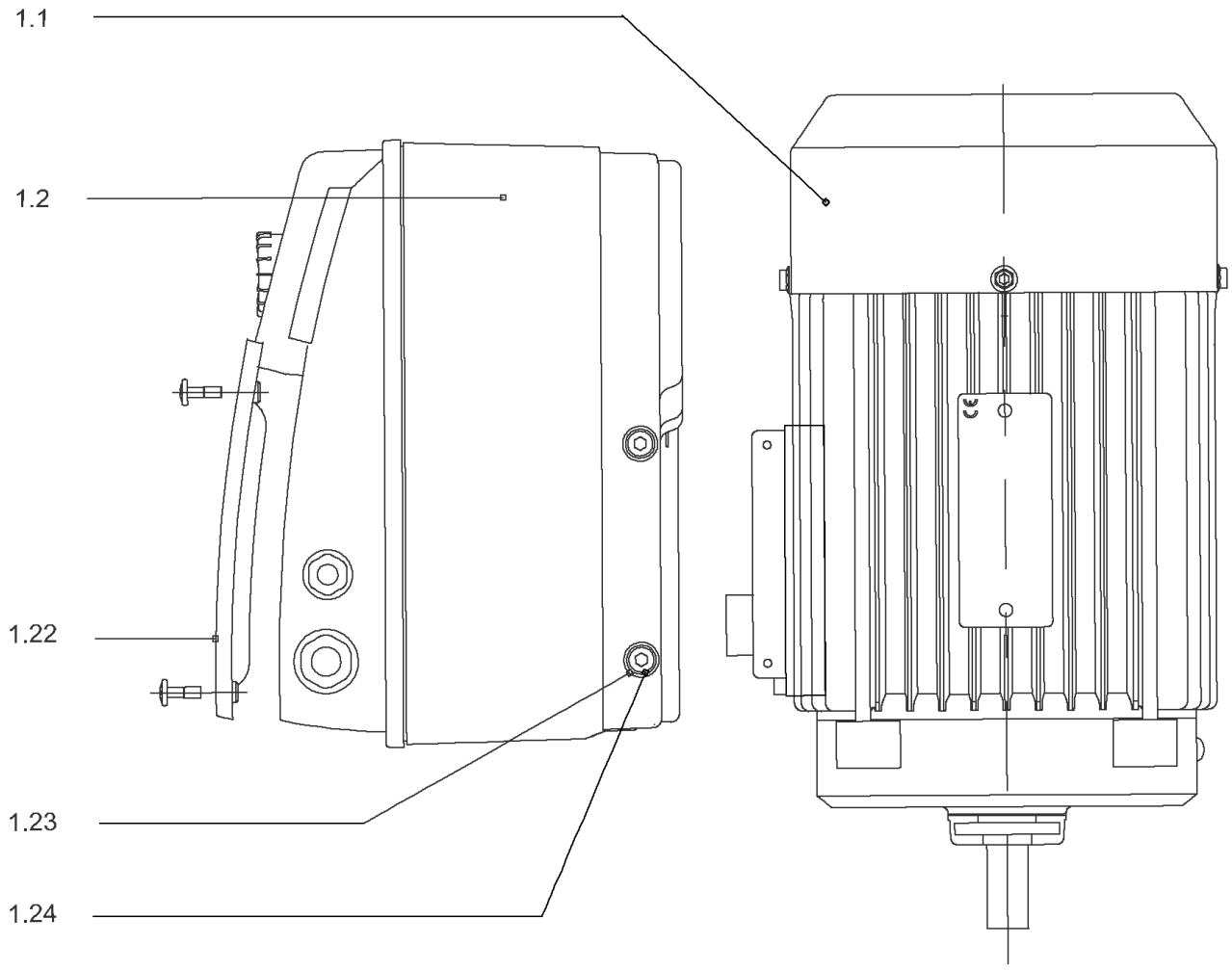
1.1
1.2
1.22
1.23
1.24

## DRIVE HELIX-VE404-IE4-WE KIT

| Item | Article no. | Description | Quantity |
|---|---|---|---|
| 1.1 | 4207914 | MOTOR 0.75/2/80 3~ 380V 60HZ IE4 WE VP. | 1 |
| | | SPARE PARTS MOTOR:ON REQUEST | 1 |
| 1.2 | 4209322 | MODULE HELIX-VE404-IE4-WE KIT | 1 |
| 1.22 | 2054372 | > MODULE COVER TL1,TL2+GASKET KIT | 1 |
| 1.23 | 4215716 | > SCREW M5X16 DIN912 8.8 A2A (4pieces) VP. | 1 |
| 1.24 | 2057978 | > RONDELLE A5,3 DIN6797 FST ZN (4 PIECES) | 1 |

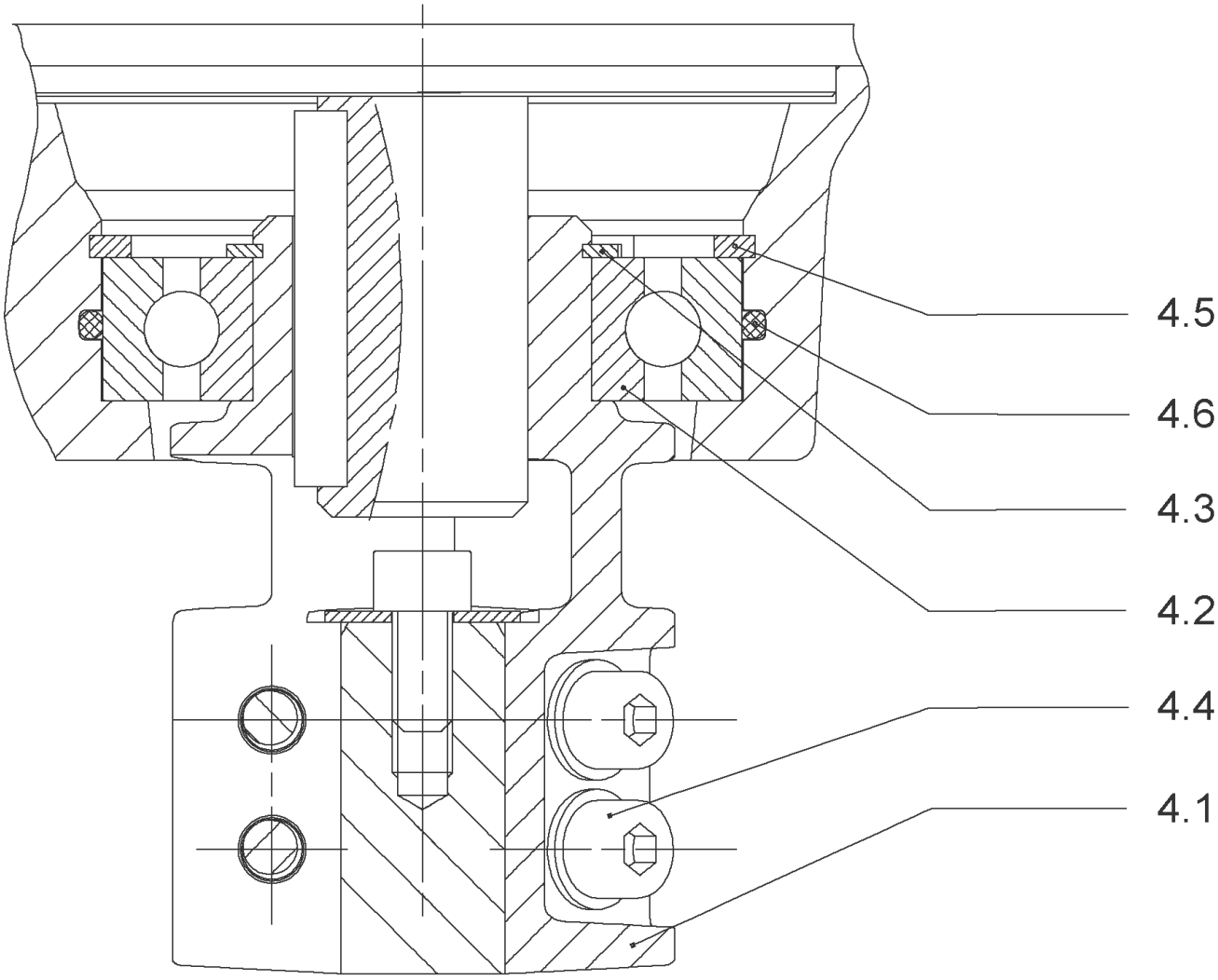
4.5
4.6
4.3
4.2
4.4
4.1

## COUPLING D.12XD.19 FT100 KIT (4178578)

| Item | Article no. | Description | Quantity |
|---|---|---|---|
| 4.1 | | COUPLING-M+ Ø12XØ19-FT100-MACHINED | 1 |
| 4.3 | 4234249 | CIRCLIP-FOR-SHAFT-D30x1.5 VP. | 1 |
| 4.2 | 2130977 | BALL BEARING 6206/ZZ-C3(HT)VP. | 1 |
| 4.4 | 4212716 | SCREW M6X20 KIT (4PIECES) | 1 |
| 4.5 | 4234250 | CIRCLIP-D62x2 VP. | 1 |
| 4.6 | 4234245 | O-RING 63X3 VP. | 1 |
| | | CONTACT-WASHER-6ETR-6,1x12,2x1,8-STEEL | 4 |

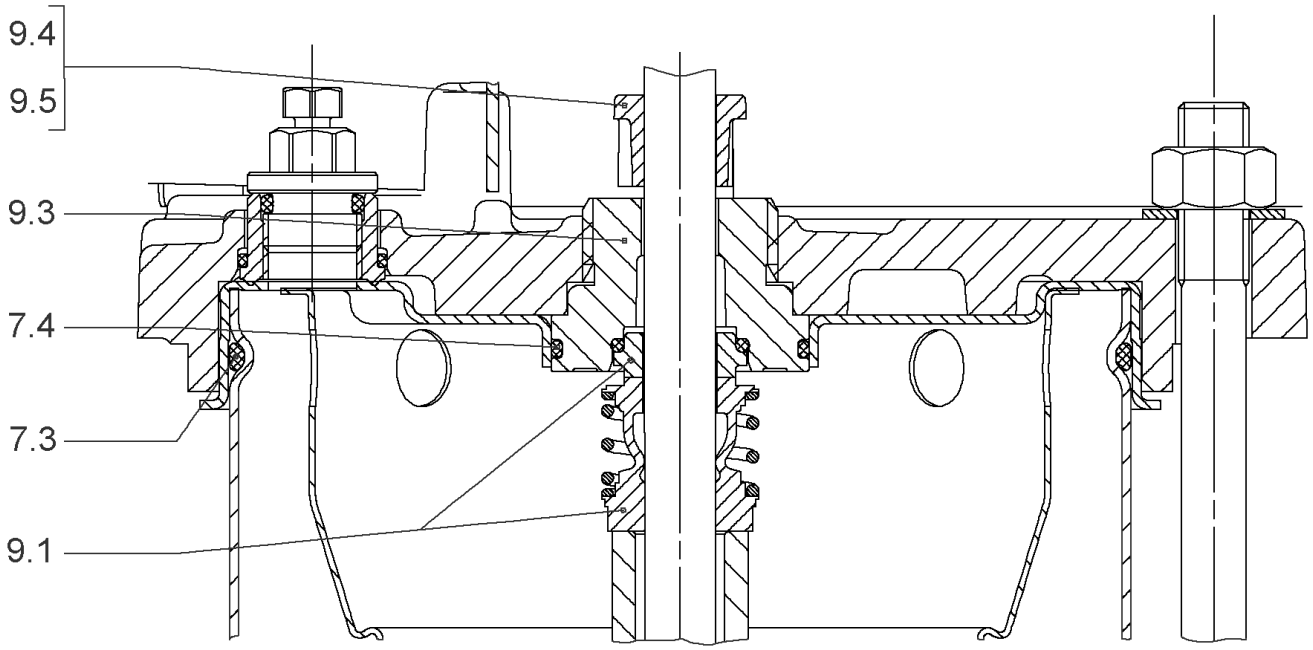
9.4
9.5
9.3
7.4
7.3
9.1

## SEAL-KIT-HELIX2-4 O/E KIT (4178564)

| Item | Article no. | Description | Quantity |
|---|---|---|---|
| 7.3 | 4176513 | O-RING FOR PUMP JACKET VP. | 1 |
| 7.4 | 2127603 | O-RING ID.37,6x2,4 EPDM VP. | 1 |
| 9.1 | 4178563 | M.SEAL.HELIX2-4 O/E VP. | 1 |
| 9.3 | 4178561 | RING HOLDER Ø22 1.4301 VP. | 1 |
| 9.5 | 4178562 | DRIVE RING D.22/12.2X10 MACH.VP. | 1 |
| 9.4 | 4176520 | SCREW CH M5x5 A4-70 ( 3PIECES ) | 1 |

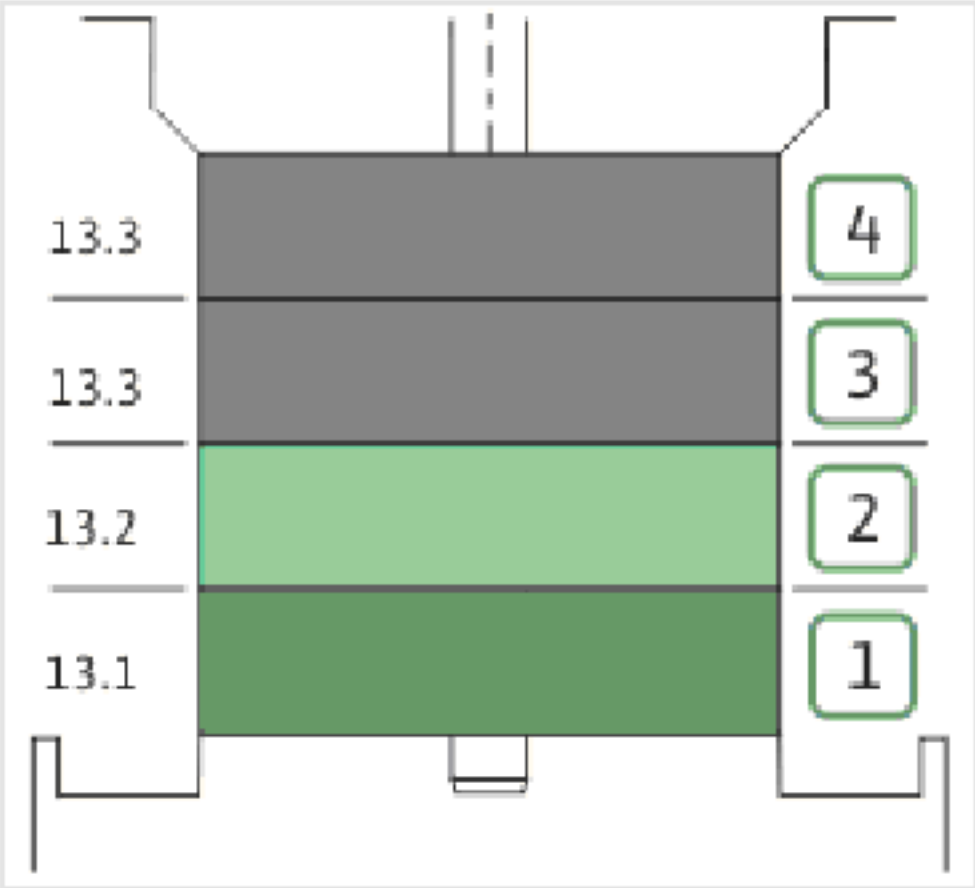
13.3
13.3
13.2
13.1
4
3
2
1

| Item | Article no. | Description | Quantity |
|---|---|---|---|
| 13.1 | 4178570 | STAGE HELIX 4 1.4301 KIT | 1 |
| | | > MACH.STG-CASING-WOGV-WNR-M+2-4-304 | 1 |
| | | > IMPELLER-M+4-304 | 1 |
| 13.2 | 4178569 | STAGE BEARING HELIX 4 1.4301 KIT | 1 |
| | | > MACH.BEARING-STG-CASING-WNR-M+4-304 | 1 |
| | | > IMPELLER-M+4-304 | 1 |
| | | > SHAFT SLEEVE SPACER Ø15,35x10,305-304 | 1 |
| | | > SHAFT-SLEEVE-D12xD16x14-CW | 1 |
| 13.3 | 4178574 | INTER STAGE HELIX4 1.4301< 15 stages KIT | 1 |
| | | > MACH.STD-STG-CASING-WGV+NR-M+4-304 | 1 |
| | | > IMPELLER-M+4-304 | 1 |
| | | > IMPELLER SPACER Ø12,05X14,85-L24,285-304 | 1 |

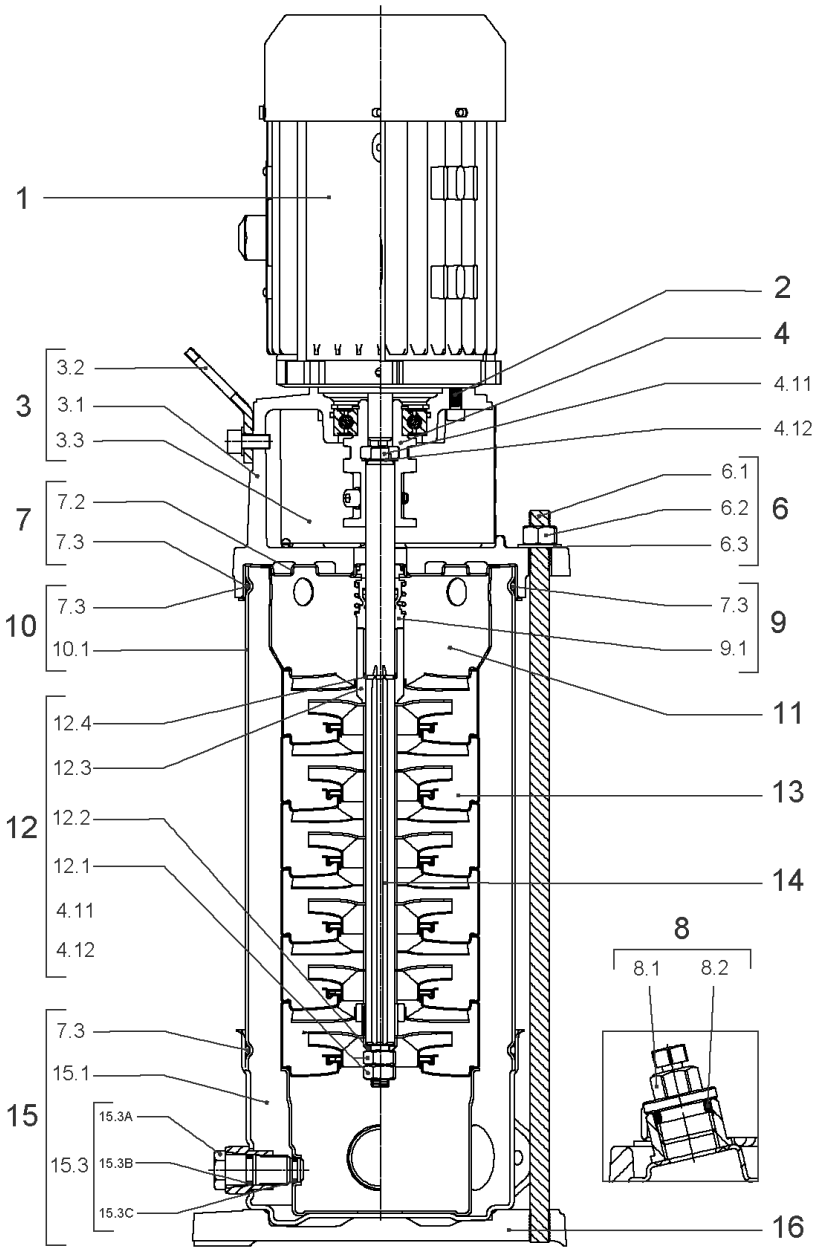
1
2
4
4.11
4.12
3
3.2
3.1
3.3
7
7.2
7.3
10
7.3
10.1
6
6.1
6.2
6.3
9
7.3
9.1
11
12
12.4
12.3
12.2
12.1
4.11
4.12
13
14
8
8.1
8.2
15
7.3
15.1
15.3
15.3A
15.3B
15.3C
16

## HELIX VE404-1/16/E/S (4201569)

| Item | Article no. | Description | Quantity |
|---|---|---|---|
| 1 | | DRIVE HELIX-VE404-IE4-WE KIT | 1 |
| Note: MOTOR BRAND WILO ELEC | | | |
| | | SPARE PARTS MOTOR:ON REQUEST | 1 |
| 2 | 4212716 | SCREW M6X20 KIT (4PIECES) | 1 |
| 3 | 4213752 | LANTERN FT100 HELIX KIT | 1 |
| 3.1 | | > LANT-MOT-VMI-ReDTC6"-FT100-MACHINED+CATA | 1 |
| 3.2 | 4184852 | > EYELET CPL.FT HELIX (2 PIECES) | 1 |
| 3.3 | 4213713 | > COUPLING PROTECTOR FT85/100 HELIX KIT | 1 |
| 4 | 4178578 | COUPLING D.12XD.19 FT100 KIT | 1 |
| 6 | 2018368 | STUD BOLT M12X289 KIT | 1 |
| 6.1 | | > TIE BOLT M12-289x18x30-1.4057 | 1 |
| 6.2 | 2094647 | > NUT M12 M12 ISO4032 VP. | 1 |
| 6.3 | 2123557 | > WASHER CS-12.4-24-1.6-NFE25 (4 PIECES) | 1 |
| 7 | 4212722 | STATIONARY RING HOLDER HELIX D23 ReDTC | 1 |
| 7.2 | 4212720 | > STATIONARY RING HOLDER HELIX D23 VP. | 1 |
| 7.3 | 4176513 | > O-RING FOR PUMP JACKET VP. | 1 |
| 8 | 4212724 | FILING/PURGING PLUG HELIX ReDTC KIT | 1 |
| 8.1 | | > FILLING PLUG MVI6"-304 | 1 |
| 8.2 | 4177800 | > O-RING EPDM PLUG HELIX VP. | 1 |
| 9 | 4212726 | MECH.SEAL HELIX V2/4 O/E ReDTC KIT | 1 |
| 9.1 | 4178563 | > M.SEAL.HELIX2-4 O/E VP. | 1 |
| 7.3 | 4176513 | > O-RING FOR PUMP JACKET VP. | 1 |
| 10 | 2127574 | HOUSING PIPE D.152x160 1.4301 KIT | 1 |
| 7.3 | 4176513 | > O-RING FOR PUMP JACKET VP. | 1 |
| 10.1 | | > HOUSING-PIPE Ø152-M+1601/02-304 | 1 |
| 11 | 4178566 | CENTERING STAGE-RETURN HELIX4 1.4307 VP | 1 |
| 12 | 4212729 | SHAFT EQUIPMENT HELIX V2/4 ReDTC KIT | 1 |
| 12.1 | | > NUT-H-M8-STAINLESS-STEEL A4-70 | 1 |
| 12.2 | | > SHAFT END WASHER Ø8/Ø12 316L | 1 |
| 12.3 | | > 1/2-SNAP-RING-2/4M3-316L | 1 |
| 12.4 | | > STOP-RUSH-1/2-D12xd2-M+316 | 1 |
| 4.11 | | > SCREW CHC-M6X14-8.8-ISO4762-GEOMET500A | 1 |
| 4.12 | | > WASHER D.24 L6U ZINK | 1 |
| 13 | | HYDRAULIC HELIX V 404 1.4307 | 1 |

| Item | Article no. | Description | Quantity |
|---|---|---|---|
| 14 | 4213744 | SHAFT D.12X231 HELIX 1.4057 VP. | 1 |
| 15 | 4174079 | PUMP HOUSING HELIX DN32 PN16 1.4301 KIT | 1 |
| 7.3 | 4176513 | > O-RING FOR PUMP JACKET VP. | 1 |
| 15.1 | | > BLASTING PPE HOUSING V-PN16-DN32-5"-304 | 1 |
| 15.2 | 4217889 | > COUNTER FLANGE-G1"-PN16-GJL KIT | 1 |
| 15.3 | 4171321 | > PRIMING/DRAIN PLUG EPDM HELIX KIT | 1 |
| 16 | 4177964 | BASEPLATE HELIX V2/4/6 PN16 VP. | 1 |

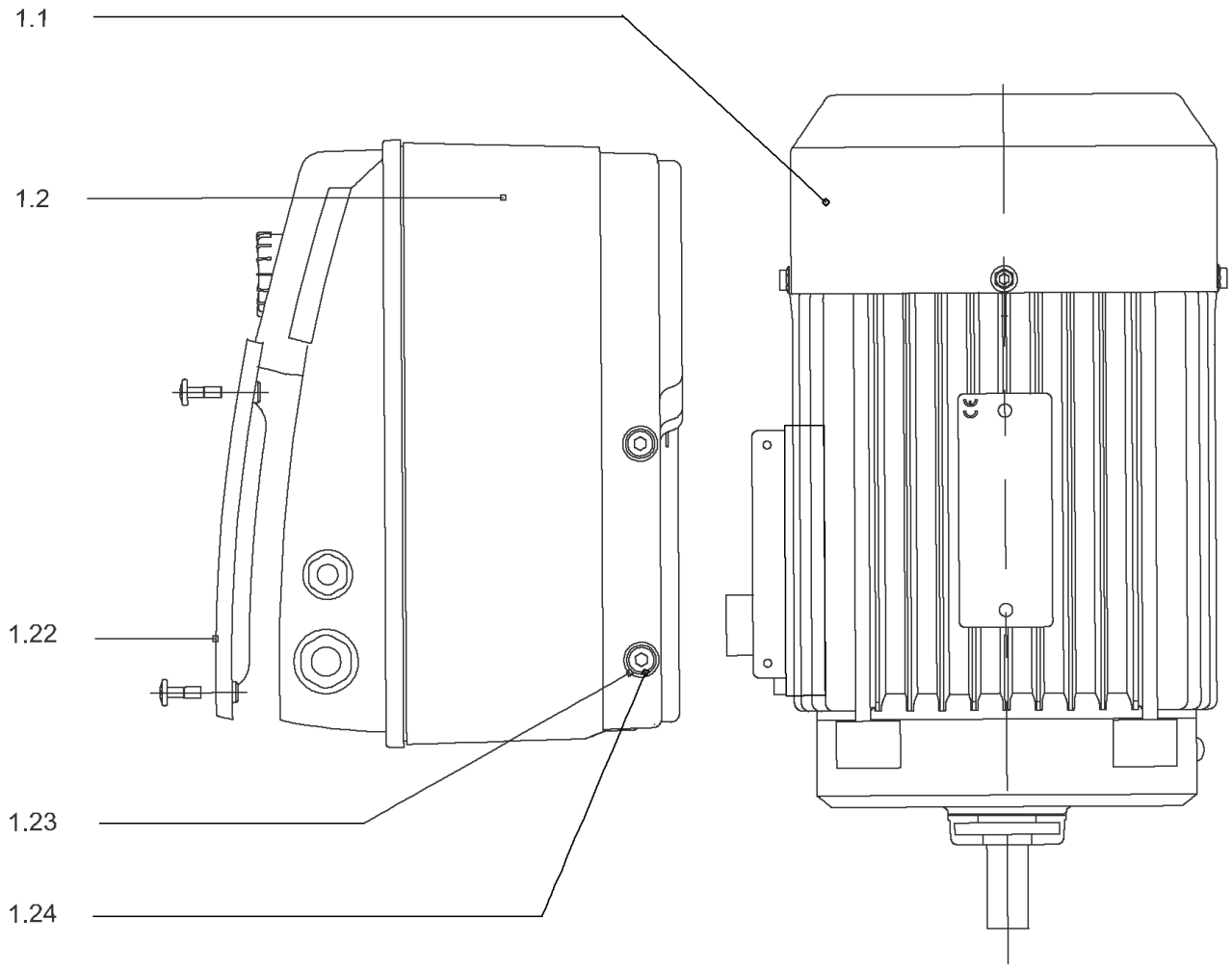
1.1
1.2
1.22
1.23
1.24

## DRIVE HELIX-VE404-IE4-WE KIT

| Item | Article no. | Description | Quantity |
|---|---|---|---|
| 1.1 | 4207914 | MOTOR 0.75/2/80 3~ 380V 60HZ IE4 WE VP. | 1 |
| | | SPARE PARTS MOTOR:ON REQUEST | 1 |
| 1.2 | 4209322 | MODULE HELIX-VE404-IE4-WE KIT | 1 |
| 1.22 | 2054372 | > MODULE COVER TL1,TL2+GASKET KIT | 1 |
| 1.23 | 4215716 | > SCREW M5X16 DIN912 8.8 A2A (4pieces) VP. | 1 |
| 1.24 | 2057978 | > RONDELLE A5,3 DIN6797 FST ZN (4 PIECES) | 1 |

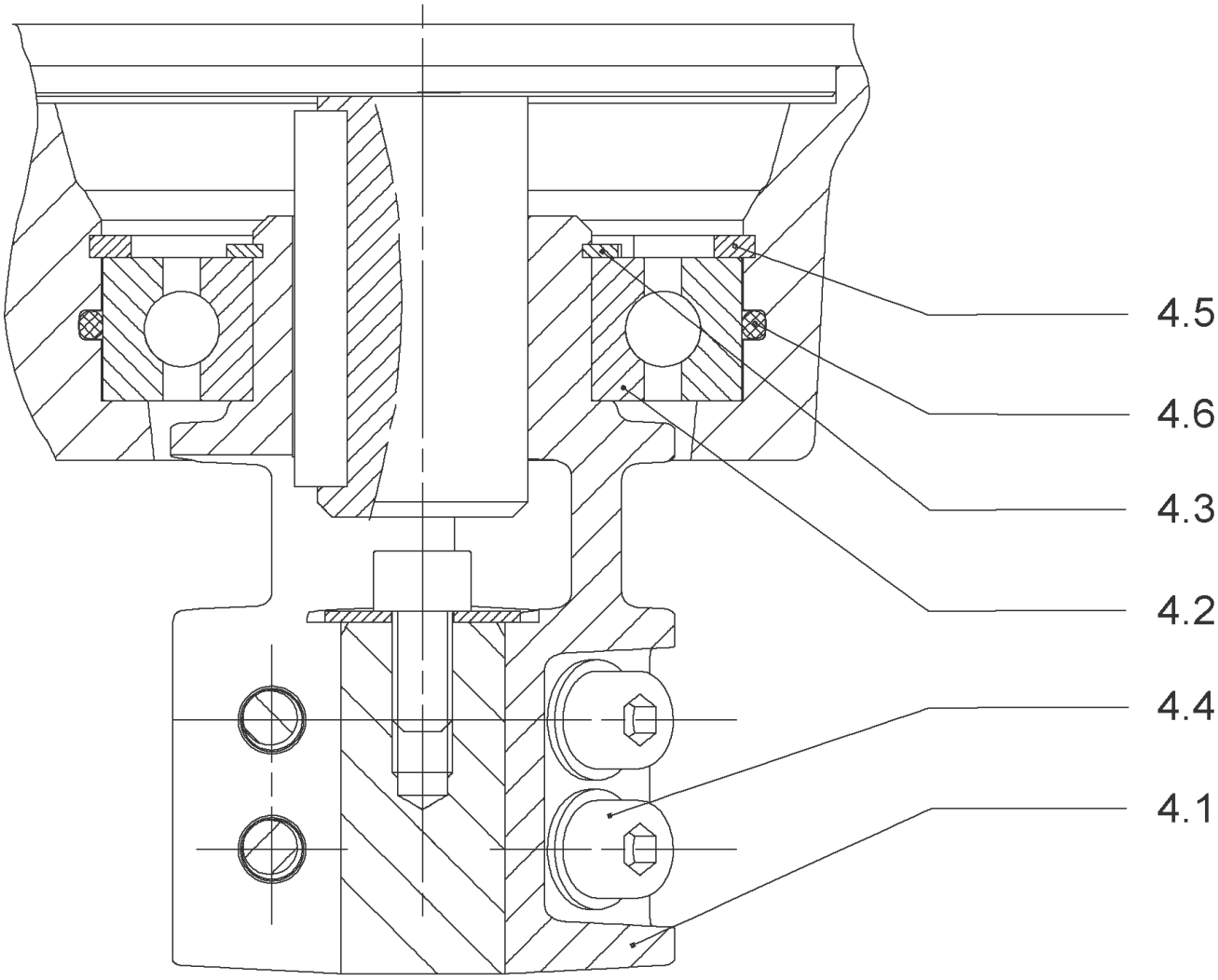
4.5
4.6
4.3
4.2
4.4
4.1

## COUPLING D.12XD.19 FT100 KIT (4178578)

| Item | Article no. | Description | Quantity |
|---|---|---|---|
| 4.1 | | COUPLING-M+ Ø12XØ19-FT100-MACHINED | 1 |
| 4.3 | 4234249 | CIRCLIP-FOR-SHAFT-D30x1.5 VP. | 1 |
| 4.2 | 2130977 | BALL BEARING 6206/ZZ-C3(HT)VP. | 1 |
| 4.4 | 4212716 | SCREW M6X20 KIT (4PIECES) | 1 |
| 4.5 | 4234250 | CIRCLIP-D62x2 VP. | 1 |
| 4.6 | 4234245 | O-RING 63X3 VP. | 1 |
| | | CONTACT-WASHER-6ETR-6,1x12,2x1,8-STEEL | 4 |

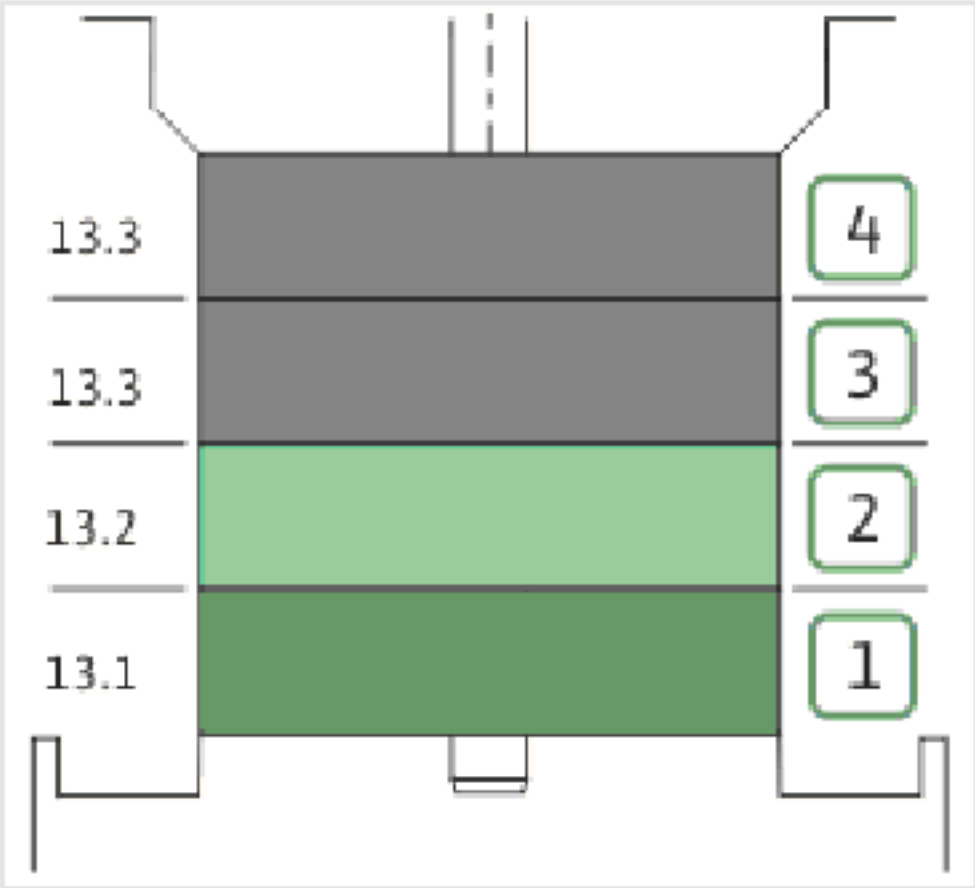
13.3
13.3
13.2
13.1
4
3
2
1

| Item | Article no. | Description | Quantity |
|---|---|---|---|
| 13.1 | 4178570 | STAGE HELIX 4 1.4301 KIT | 1 |
| | | > MACH.STG-CASING-WOGV-WNR-M+2-4-304 | 1 |
| | | > IMPELLER-M+4-304 | 1 |
| 13.2 | 4178569 | STAGE BEARING HELIX 4 1.4301 KIT | 1 |
| | | > MACH.BEARING-STG-CASING-WNR-M+4-304 | 1 |
| | | > IMPELLER-M+4-304 | 1 |
| | | > SHAFT SLEEVE SPACER Ø15,35x10,305-304 | 1 |
| | | > SHAFT-SLEEVE-D12xD16x14-CW | 1 |
| 13.3 | 4178574 | INTER STAGE HELIX4 1.4301< 15 stages KIT | 1 |
| | | > MACH.STD-STG-CASING-WGV+NR-M+4-304 | 1 |
| | | > IMPELLER-M+4-304 | 1 |
| | | > IMPELLER SPACER Ø12,05X14,85-L24,285-304 | 1 |

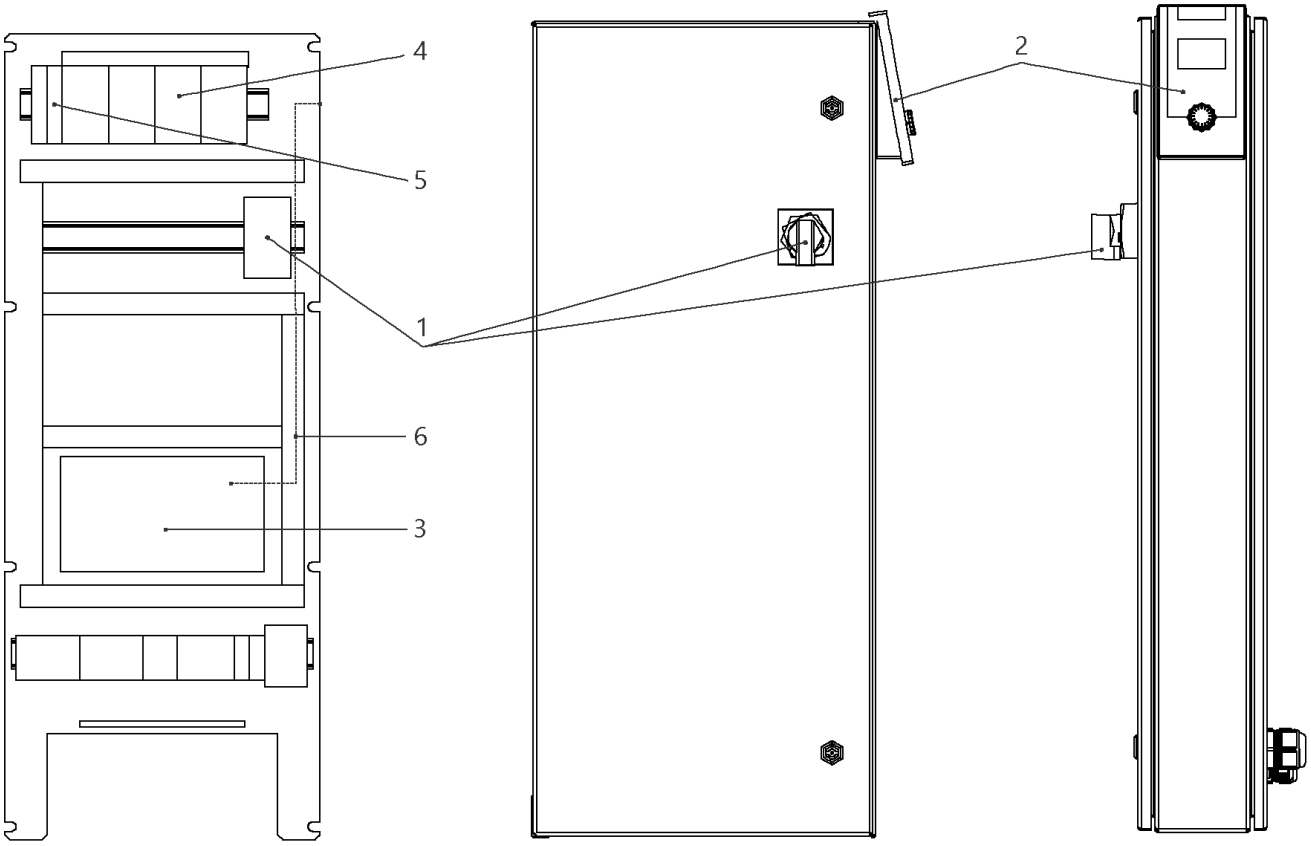
4
5
1
6
3
2

## W-CTRL-SCE-B-4x0,55-1,5KW-T4-FM-ND1

| Item | Article no. | Description | Quantity |
|---|---|---|---|
| 1 | 2104470 | MAIN SWITCH OT40F3 L250 KIT | 1 |
| 2 | 4184784 | CONTROL PANEL HMI SC KIT | 1 |
| 2 | 4185259 | ASSEMBLY DISPLAY SC PKG VP. | 1 |
| 3 | 4185257 | ASSEMBLY CPU SCe Booster VP. | 1 |
| 4 | 2051217 | AUTOM.CIRCUIT BREAKER S203 B16 TO7,5kW | 1 |
| 5 | 2046288 | CIRCUIT BREAKER S201 B16 | 1 |
| 6 | 4197081 | CABLE RJ45 CAT6 0,5M RED SC-PANEL VP. | 1 |

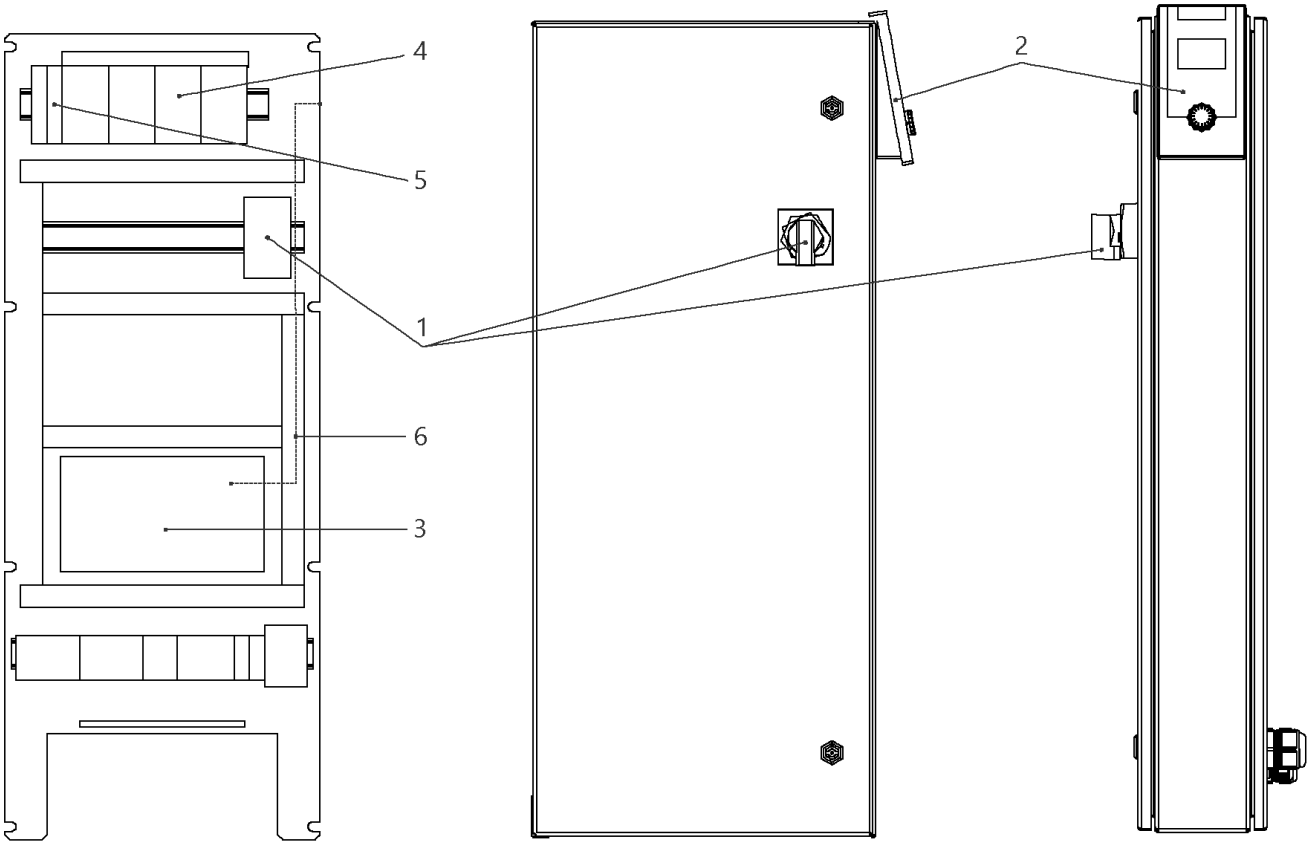
4
5
1
6
3
2

## W-CTRL-SCE-B-4x10A-T34-FM-ND1-AVC-PKG (2541915)

| Item | Article no. | Description | Quantity |
|---|---|---|---|
| 1 | 2104473 | MAIN SWITCH OT63F3 L105 KIT | 1 |
| 2 | 4184784 | CONTROL PANEL HMI SC KIT | 1 |
| 2 | 4185259 | ASSEMBLY DISPLAY SC PKG VP. | 1 |
| Note: DISPLAY ALONE / PLATINE SEULE | | | |
| 3 | 4185257 | ASSEMBLY CPU SCe Booster VP. | 1 |
| 5 | 2046288 | CIRCUIT BREAKER S201 B16 | 1 |
| 4 | 2119861 | AUTOMATIC CIRCUIT BREAKER S203 B13 3POL. | 1 |
| 6 | 4197081 | CABLE RJ45 CAT6 0,5M RED SC-PANEL VP. | 1 |

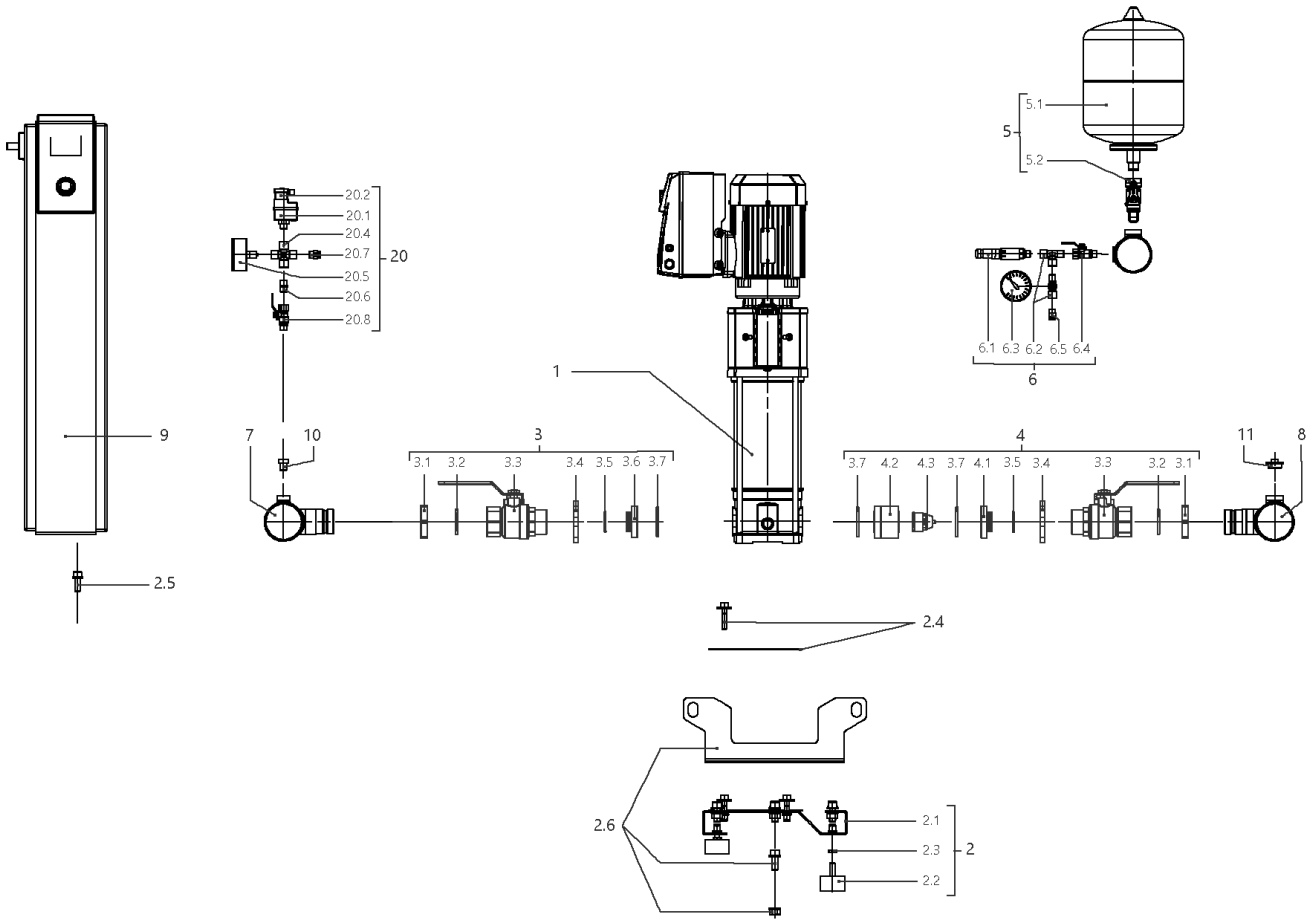
5.1
5
5.2
20.2
20.1
20.4
20.7
20
20.5
20.6
20.8
6.1 6.3 6.2 6.5 6.4
6
1
9
7
10
3
3.1 3.2 3.3 3.4 3.5 3.6 3.7
4
3.7 4.2 4.3 3.7 4.1 3.5 3.4 3.3 3.2 3.1
11
8
2.5
2.4
2.6
2.1
2.3
2
2.2

| Item | Article no. | Description | Quantity |
|---|---|---|---|
| 1 | | HELIX VE405-1/16/E/S | 1 |
| Note: TO / BIS / JUSQU'AU 31/03/2016 | | | |
| 1 | 4201571 | HELIX VE405-1/16/E/S | 1 |
| Note: FROM / AB / À PARTIR DU 01/04/2016 | | | |
| 2 | 4200146 | BASE PLATE DE4 1450x420 KIT | 1 |
| Note: TO / BIS / JUSQU'AU 28/02/2013 | | | |
| 2.1 | | > BASEPLATE_4x4/6/10/16V_E300_BOX_150 | 1 |
| 2.2 | 2028654 | > VIBRATION DAMPER D.50X30 M10X28 | 1 |
| 2.3 | 2028281 | > NUT M10 DIN936 (ISO4035) 17H VZ | 1 |
| 2.4 | 4199875 | > HOLDER PUMP Siboost Helix V2/4 KIT | 1 |
| 2.5 | 4197084 | > HOLDER SWITCHBOX WILO Smart Control KIT | 1 |
| 2.6 | 4197117 | > LIFTING Siboost HELIX SC KIT | 1 |
| 2 | 4200143 | BASE PLATE DE4 1450x300 KIT | 1 |
| Note: FROM / AB / À PARTIR DU 01/03/2013 | | | |
| 2.1 | | > BASEPLATE_4x4/6/10V_E300_1450x300BOX_150 | 1 |
| 2.2 | 2028654 | > VIBRATION DAMPER D.50X30 M10X28 | 1 |
| 2.3 | 2028281 | > NUT M10 DIN936 (ISO4035) 17H VZ | 1 |
| 2.4 | 4199875 | > HOLDER PUMP Siboost Helix V2/4 KIT | 1 |
| 2.5 | 4197084 | > HOLDER SWITCHBOX WILO Smart Control KIT | 1 |
| 2.6 | 4197085 | > LIFTING Siboost HELIX SC KIT | 1 |
| 3 | 4199876 | SUCTION SIDE Siboost Helix V2/4/6 KIT | 1 |
| 3.1 | 2032610 | > NUT G11/4 MS VP. | 1 |
| 3.2 | 2032611 | > O-RING ID.36,09X3,53N DIN3771 E7502 | 1 |
| 3.3 | 2507646 | > BALL VALVE G11/4"M-F-W.HANDLE 1/4-TURN | 1 |
| 3.4 | 2032613 | > SCREWED FLANGE G1 1/4" LK-75 ST37VZ | 1 |
| 3.5 | 2032614 | > O-RING ID.29,82X2,62N DIN3771 E7502 | 1 |
| 3.6 | 2032615 | > SPACER F.I/A KUH.DN32 CUZN | 1 |
| 3.7 | 2032616 | > O-RING ID.44X3,53N DIN3771 E7502 | 1 |
| 4 | 4199877 | DELIVERY SIDE Siboost Helix V2/4/6 KIT | 1 |
| 3.1 | 2032610 | > NUT G11/4 MS VP. | 1 |
| 3.2 | 2032611 | > O-RING ID.36,09X3,53N DIN3771 E7502 | 1 |
| 3.3 | 2507646 | > BALL VALVE G11/4"M-F-W.HANDLE 1/4-TURN | 1 |
| 3.4 | 2032613 | > SCREWED FLANGE G1 1/4" LK-75 ST37VZ | 1 |
| 3.5 | 2032614 | > O-RING ID.29,82X2,62N DIN3771 E7502 | 1 |

| Item | Article no. | Description | Quantity |
|---|---|---|---|
| 4.1 | 2058116 | > SPACER F.I/A KUH.DN32 CUZN | 1 |
| 3.7 | 2032616 | > O-RING ID.44X3,53N DIN3771 E7502 | 1 |
| 4.2 | 2058115 | > HOUSING RFV(RV-IN) DN32 SGS/DRS | 1 |
| 4.3 | 2027870 | > NON-RETURN-DEVICE INSERT DN32(MTR) | 1 |
| 5 | 2032642 | DIAPHREM TANK 8L/PN16 DIN4807/T5 KIT | 1 |
| 5.1 | 2045914 | > DIAPHREM TANK 8L TYP-DD 16BAR | 1 |
| 5.2 | 2027853 | > FLOW FITTING G3/4 FOR DIAPHRAGM VES. | 1 |
| 6 | 4197076 | PRESSURE SENSOR/ GAUGE 0-16BAR KIT | 1 |
| 6.1 | 2085909 | > PRESS.SENSOR 1/4" 0-16BAR 4-20MA VP. | 1 |
| 6.2 | 4197077 | > T-PIECE 1/4" VP. | 1 |
| 6.3 | 2028692 | > PRESSURE GAUGE NG63-PN16-G1/4 | 1 |
| 6.4 | 2028291 | > BALL TAP R1/4" PN42 GIACOMINI R254DL | 1 |
| 6.5 | 2028691 | > BLOWGUN 1/4" MS 30BAR VP. | 1 |
| 7 | 4200144 | PIPE DE4 21/2''-4x11/4"+2x1/4x900 VP. | 1 |
| 8 | 4200145 | PIPE DE4 21/2''-4x11/4"+2x1/4+1x3/4x900 | 1 |
| 9 | | W-CTRL-SCE-B-4x1,1KW-T4-FM-ND2 | 1 |
| Note: TO / BIS / JUSQU'AU 28/02/2013 | | | |
| 9 | | W-CTRL-SCE-B-4x0,55-1,5KW-T4-FM-ND1 | 1 |
| Note: FROM / AB / À PARTIR DU 01/03/2013 - TO / BIS / JUSQU'AU 18/05/2014 | | | |
| 9 | 2541915 | W-CTRL-SCE-B-4x10A-T34-FM-ND1-AVC-PKG | 1 |
| Note: FROM / AB / À PARTIR DU 19/05/2014 | | | |
| 10 | 4197079 | PLUG G1/4"x10 AISI304 KIT | 1 |
| 11 | 2032654 | PLUG R3/4" MS VIEGA 1751 | 1 |
| 20 | | ASSEMBLY WMS. DE-EB. +VP | 1 |
| 20.1 | 2028652 | > PRESSURE SWITCH PS3-ASR 1/(1,3) VP. | 1 |
| 20.2 | 2130983 | > PLUG PS3-415 WITH KABEL 1,5M 2NO VP. | 1 |
| 20.4 | 2028290 | > CROSSPIECE R1/4" MS-NICKEL | 1 |
| 20.5 | 2028687 | > PRESSURE GAUGE NG63 R1/4" HI.0-6BAR | 1 |
| 20.6 | 2054268 | > DUAL NIPPLE G1/4" x G1/4" MS VP. | 1 |
| 20.7 | 2028691 | > BLOWGUN 1/4" MS 30BAR VP. | 1 |
| 20.8 | 2028291 | > BALL TAP R1/4" PN42 GIACOMINI R254DL | 1 |

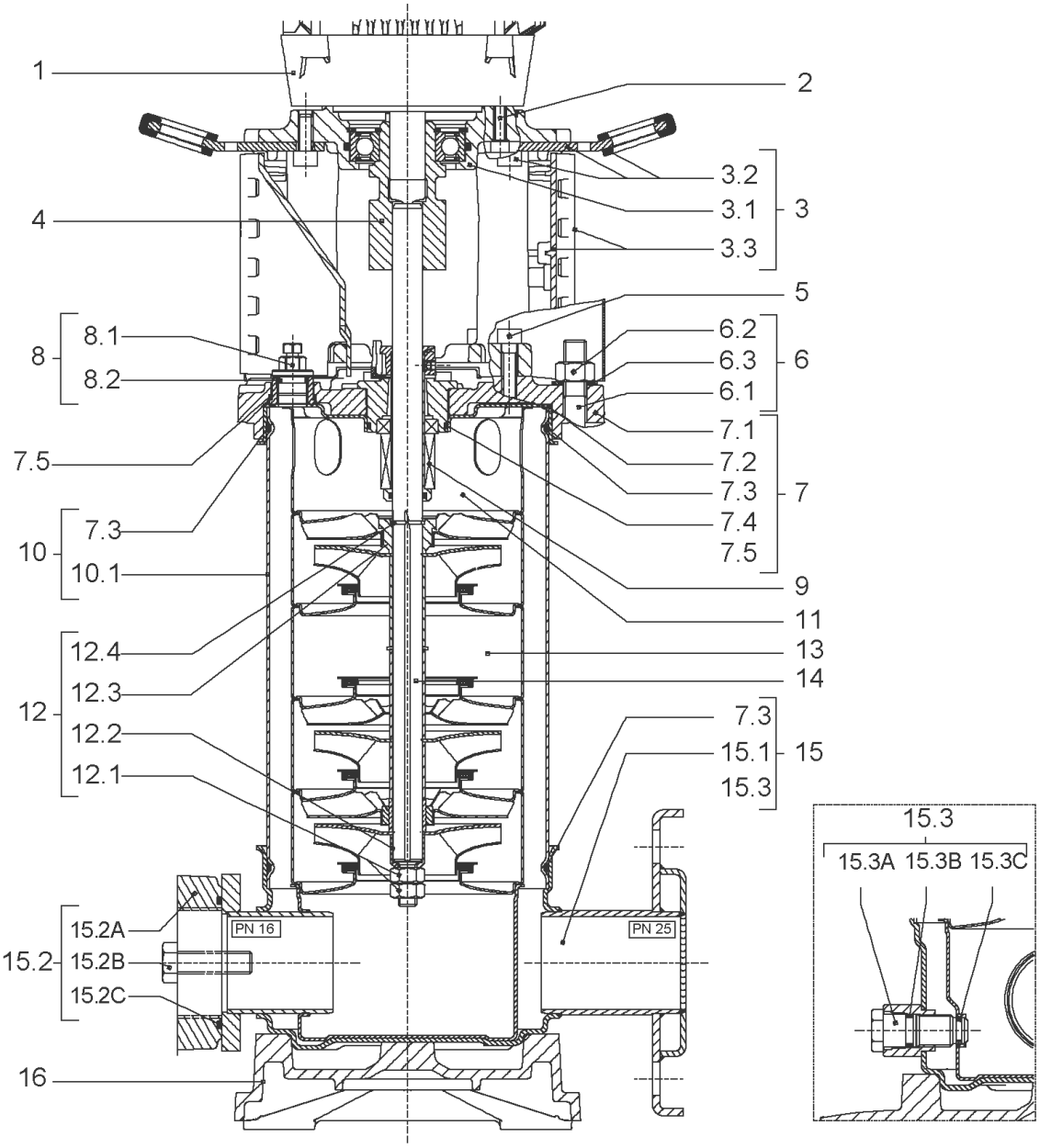
1
2
3.2
3.1
3
3.3
4
5
8.1
8
8.2
6.2
6.3
6
6.1
7.1
7.5
7.2
7.3
7
7.4
7.3
10
7.5
10.1
9
11
12.4
13
12.3
14
12
12.2
7.3
15.1
15
12.1
15.3
15.3
15.3A 15.3B 15.3C
15.2A
PN 16
PN 25
15.2
15.2B
15.2C
16

| Item | Article no. | Description | Quantity |
|---|---|---|---|
| 1 | | DRIVE HELIX-VE405-IE2-WE KIT | 1 |
| Note: MOTOR BRAND WILO ELEC | | | |
| 1 | | DRIVE HELIX-VE405-IE4-WE KIT | 1 |
| Note: MOTOR BRAND WILO ELEC | | | |
| 2 | 4159702 | SCREW M6X30 (4 PIECES) | 1 |
| 3 | 4172790 | EQUIPED LANTERN NEXIS FT 100 KIT | 1 |
| 3.1 | | > M+5_6_LANTERN_ONE-PIECE_FT100_CATA | 1 |
| 3.2 | 2127604 | > EYELET CPL.FT HELIX(2 PIECES) | 1 |
| 3.3 | 4159692 | > COUPLING PROTECTOR FT HELIX KIT | 1 |
| 4 | 4178578 | COUPLING D.12XD.19 FT100 KIT | 1 |
| 5 | 4159707 | SCREW M8X30 (4 PIECES) | 1 |
| 6 | 4178579 | STUD BOLT M12X317 KIT | 1 |
| 6.1 | | > TIE BOLT M12-317x18x30-1.4057 | 1 |
| 6.2 | 2094647 | > NUT M12 M12 ISO4032 VP. | 1 |
| 6.3 | 2123557 | > WASHER CS-12.4-24-1.6-NFE25 (4 PIECES) | 1 |
| 7 | 4210143 | STATIONARY RING HOLDER HELIX 6" EPDM | 1 |
| 7.2 | 2127607 | > STATIONARY RING HOLDER 6" HELIX 1.4301 V | 1 |
| 7.3 | 4176513 | > O-RING FOR PUMP JACKET VP. | 1 |
| 7.4 | 2127603 | > O-RING ID.37,6x2,4 EPDM VP. | 1 |
| 7.5 | 2127602 | > O-RING ID.21,35x2 EPDM VP. | 1 |
| 8 | 4159686 | FILING/PURGING PLUG HELIX EPDM KIT | 1 |
| 9 | 4178564 | SEAL-KIT-HELIX2-4 O/E KIT | 1 |
| 10 | 4178580 | HOUSING PIPE D.152X184 1.4301 KIT | 1 |
| 7.3 | 4176513 | > O-RING FOR PUMP JACKET VP. | 1 |
| 10.1 | | > HOUSING-PIPE Ø152-M+205/405-304 | 1 |
| 11 | 4178566 | CENTERING STAGE-RETURN HELIX4 1.4307 VP | 1 |
| 12 | 4178568 | SHAFT EQUIPMENT HELIX V2/V4 KIT | 1 |
| 12.1 | | > NUT-H-M8-STAINLESS-STEEL A4-70 | 2 |
| 12.2 | | > SHAFT END WASHER Ø8/Ø12 316L | 1 |
| 12.3 | | > STOP COLLAR OF IMPELLER M+2/4 SINGLEBLOC | 1 |
| 12.4 | | > STOP-RUSH-1/2-D12xd2-M+316 | 2 |
| 13 | | HYDRAULIC HELIX V 405 1.4307 | 1 |
| 14 | 4178582 | SHAFT D.12X308 1.4301 VP. | 1 |
| 15 | 4174079 | PUMP HOUSING HELIX DN32 PN16 1.4301 KIT | 1 |

| Item | Article no. | Description | Quantity |
|---|---|---|---|
| 7.3 | 4176513 | > O-RING FOR PUMP JACKET VP. | 1 |
| 15.1 | | > BLASTING PPE HOUSING V-PN16-DN32-5"-304 | 1 |
| 15.2 | 4217889 | > COUNTER FLANGE-G1"-PN16-GJL KIT | 1 |
| 15.3 | 4171321 | > PRIMING/DRAIN PLUG EPDM HELIX KIT | 1 |
| 16 | 4177964 | BASEPLATE HELIX V2/4/6 PN16 VP. | 1 |

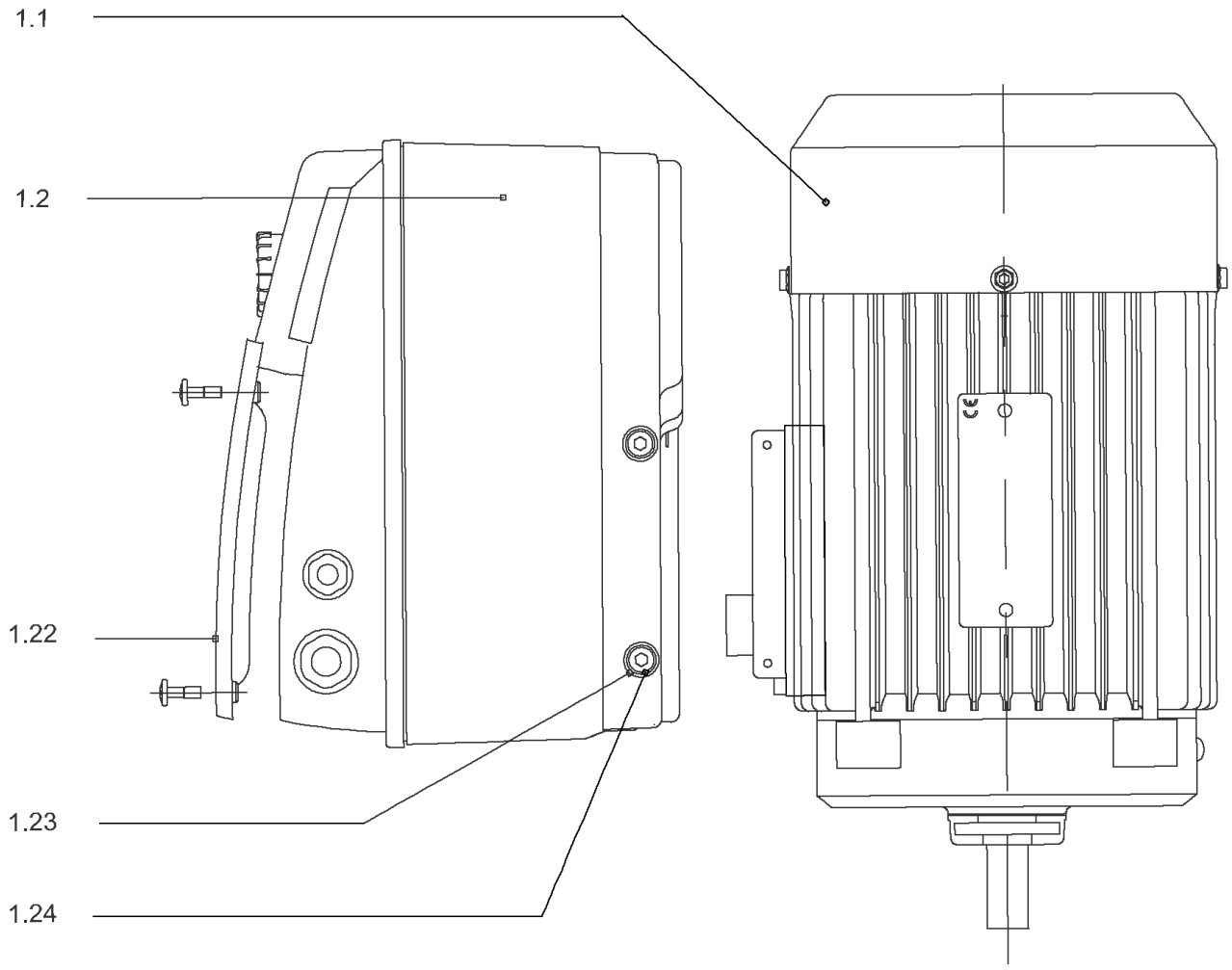
1.1
1.2
1.22
1.23
1.24

## DRIVE HELIX-VE405-IE2-WE KIT

| Item | Article no. | Description | Quantity |
|---|---|---|---|
| 1.1 | 4184817 | MOTOR 1,1/2/80 3~ 380V 60HZ IE2 WE VP. | 1 |
| | | SPARE PARTS MOTOR:ON REQUEST | 1 |
| 1.2 | 4186765 | MODULE HELIX-VE405-IE2-WE KIT | 1 |
| 1.22 | 2054372 | > MODULE COVER TL1,TL2+GASKET KIT | 1 |
| 1.23 | 4215716 | > SCREW M5X16 DIN912 8.8 A2A (4pieces) VP. | 1 |
| 1.24 | 2057978 | > RONDELLE A5,3 DIN6797 FST ZN (4 PIECES) | 1 |

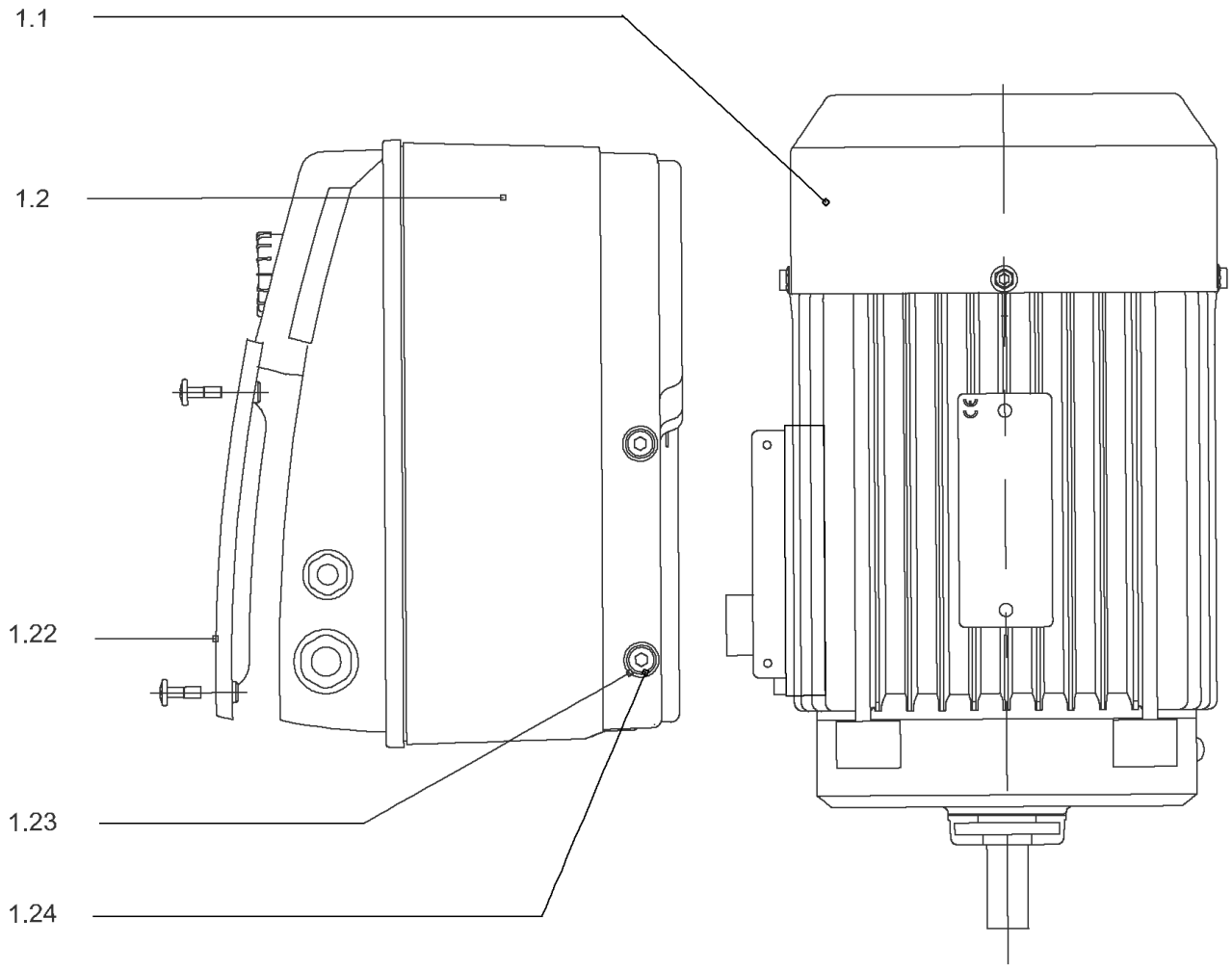
1.1
1.2
1.22
1.23
1.24

## DRIVE HELIX-VE405-IE4-WE KIT

| Item | Article no. | Description | Quantity |
|---|---|---|---|
| 1.1 | 4207916 | MOTOR 1.1/2/80 3~ 380V 60HZ IE4 WE VP. | 1 |
| | | SPARE PARTS MOTOR:ON REQUEST | 1 |
| 1.2 | 4209598 | MODULE HELIX-VE405-IE4-WE KIT | 1 |
| 1.22 | 2054372 | > MODULE COVER TL1,TL2+GASKET KIT | 1 |
| 1.23 | 4215716 | > SCREW M5X16 DIN912 8.8 A2A (4pieces) VP. | 1 |
| 1.24 | 2057978 | > RONDELLE A5,3 DIN6797 FST ZN (4 PIECES) | 1 |

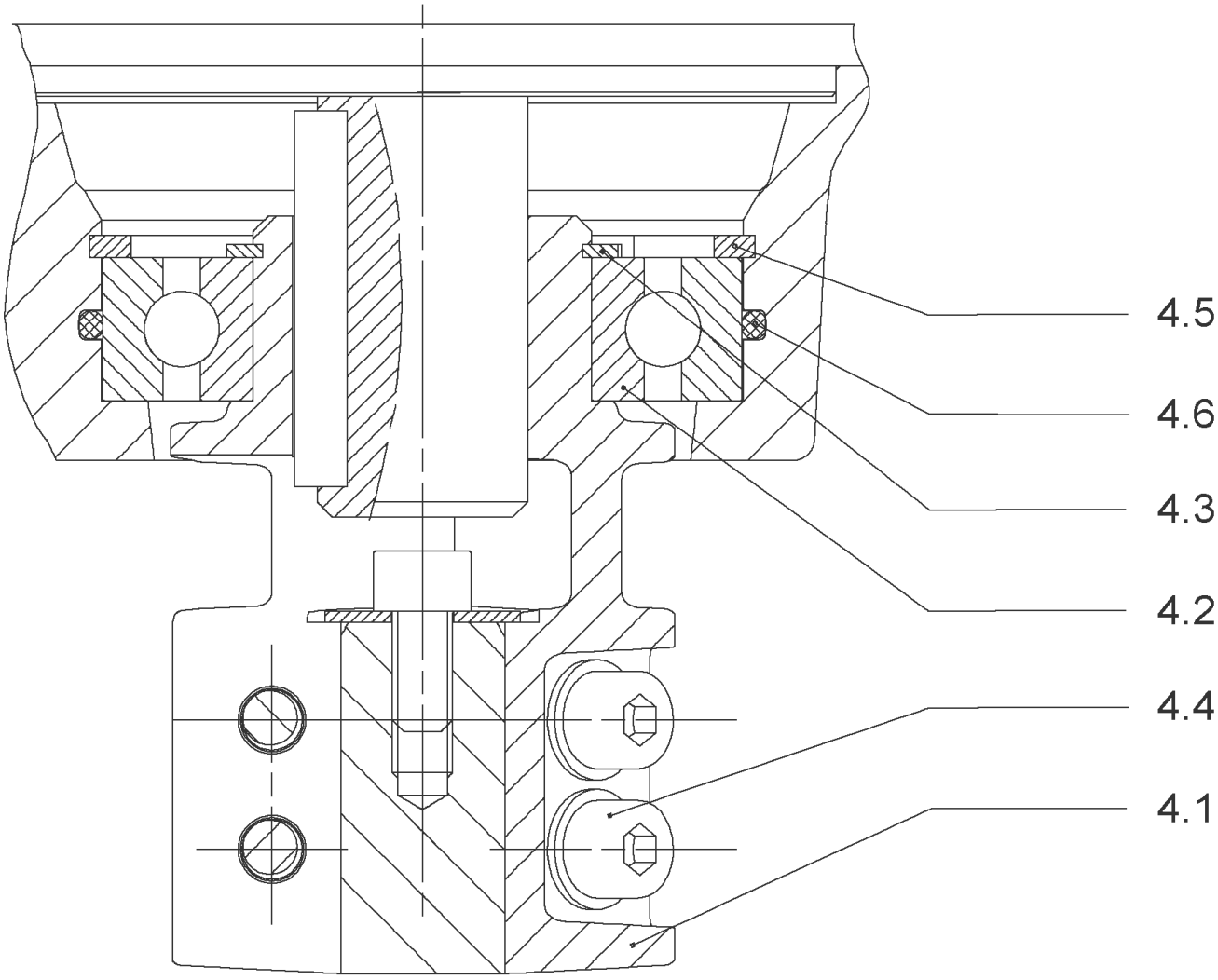
4.5
4.6
4.3
4.2
4.4
4.1

## COUPLING D.12XD.19 FT100 KIT (4178578)

| Item | Article no. | Description | Quantity |
|---|---|---|---|
| 4.1 | | COUPLING-M+ Ø12XØ19-FT100-MACHINED | 1 |
| 4.3 | 4234249 | CIRCLIP-FOR-SHAFT-D30x1.5 VP. | 1 |
| 4.2 | 2130977 | BALL BEARING 6206/ZZ-C3(HT)VP. | 1 |
| 4.4 | 4212716 | SCREW M6X20 KIT (4PIECES) | 1 |
| 4.5 | 4234250 | CIRCLIP-D62x2 VP. | 1 |
| 4.6 | 4234245 | O-RING 63X3 VP. | 1 |
| | | CONTACT-WASHER-6ETR-6,1x12,2x1,8-STEEL | 4 |

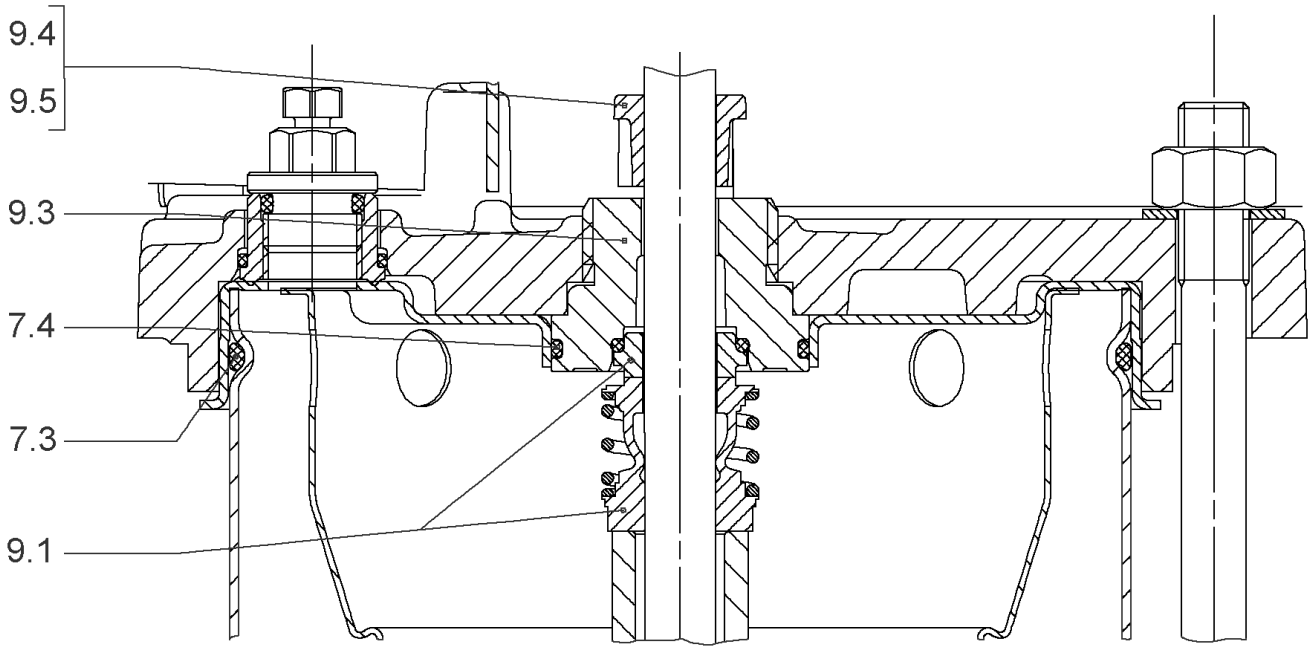
9.4
9.5
9.3
7.4
7.3
9.1

## SEAL-KIT-HELIX2-4 O/E KIT (4178564)

| Item | Article no. | Description | Quantity |
|---|---|---|---|
| 7.3 | 4176513 | O-RING FOR PUMP JACKET VP. | 1 |
| 7.4 | 2127603 | O-RING ID.37,6x2,4 EPDM VP. | 1 |
| 9.1 | 4178563 | M.SEAL.HELIX2-4 O/E VP. | 1 |
| 9.3 | 4178561 | RING HOLDER Ø22 1.4301 VP. | 1 |
| 9.5 | 4178562 | DRIVE RING D.22/12.2X10 MACH.VP. | 1 |
| 9.4 | 4176520 | SCREW CH M5x5 A4-70 ( 3PIECES ) | 1 |

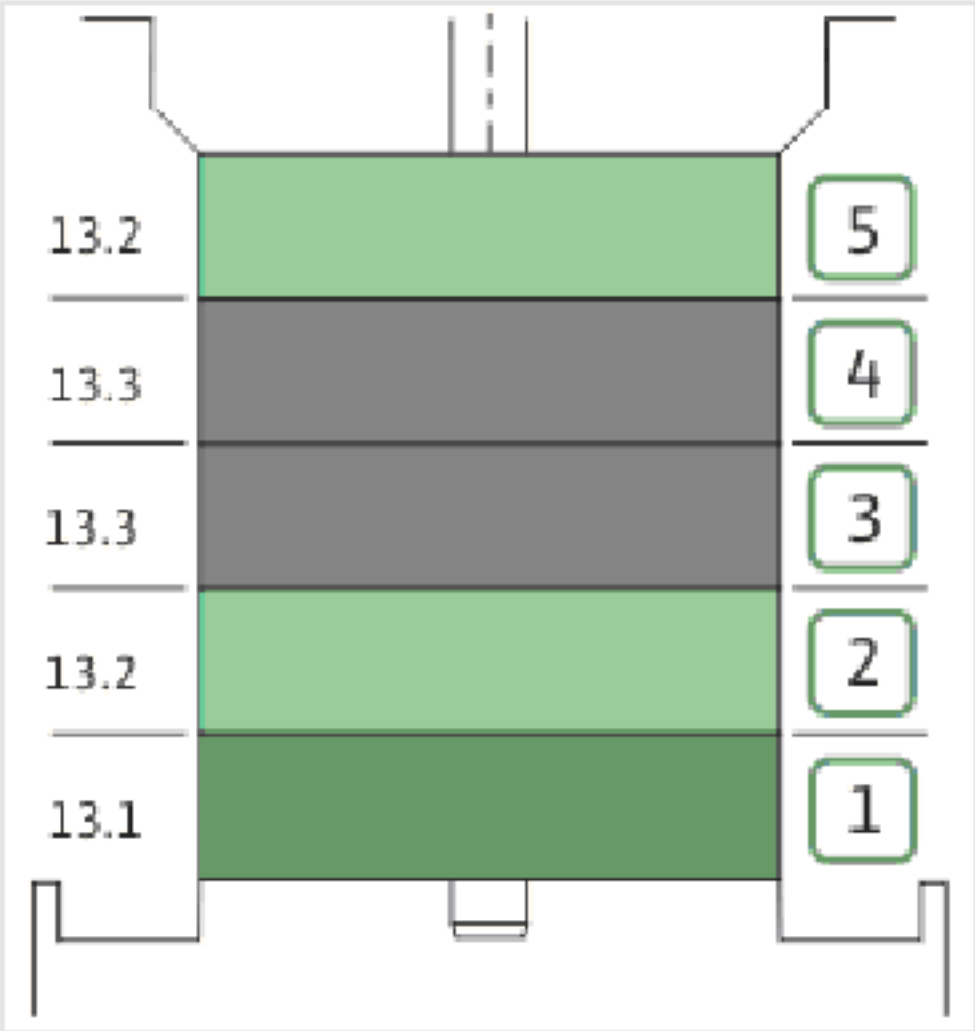
13.2
13.3
13.3
13.2
13.1
5
4
3
2
1

| Item | Article no. | Description | Quantity |
|---|---|---|---|
| 13.1 | 4178570 | STAGE HELIX 4 1.4301 KIT | 1 |
| | | > MACH.STG-CASING-WOGV-WNR-M+2-4-304 | 1 |
| | | > IMPELLER-M+4-304 | 1 |
| 13.2 | 4178569 | STAGE BEARING HELIX 4 1.4301 KIT | 1 |
| | | > MACH.BEARING-STG-CASING-WNR-M+4-304 | 1 |
| | | > IMPELLER-M+4-304 | 1 |
| | | > SHAFT SLEEVE SPACER Ø15,35x10,305-304 | 1 |
| | | > SHAFT-SLEEVE-D12xD16x14-CW | 1 |
| 13.3 | 4178574 | INTER STAGE HELIX4 1.4301< 15 stages KIT | 1 |
| | | > MACH.STD-STG-CASING-WGV+NR-M+4-304 | 1 |
| | | > IMPELLER-M+4-304 | 1 |
| | | > IMPELLER SPACER Ø12,05X14,85-L24,285-304 | 1 |

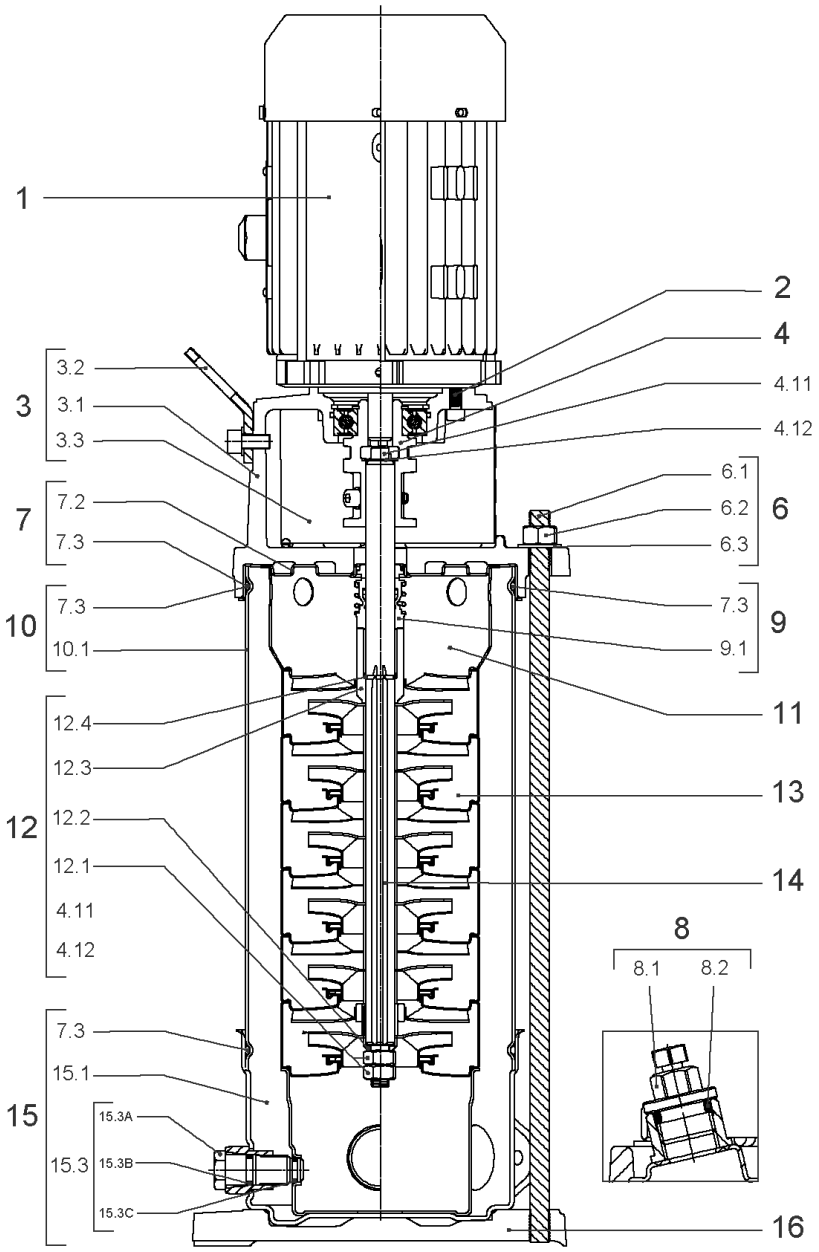
1
2
4
4.11
4.12
3
3.2
3.1
3.3
7
7.2
7.3
10
7.3
10.1
6
6.1
6.2
6.3
9
7.3
9.1
11
12
12.4
12.3
12.2
12.1
4.11
4.12
13
14
8
8.1
8.2
15
7.3
15.1
15.3
15.3A
15.3B
15.3C
16

## HELIX VE405-1/16/E/S (4201571)

| Item | Article no. | Description | Quantity |
|---|---|---|---|
| 1 | | DRIVE HELIX-VE405-IE4-WE KIT | 1 |
| Note: MOTOR BRAND WILO ELEC | | | |
| | | SPARE PARTS MOTOR:ON REQUEST | 1 |
| 2 | 4212716 | SCREW M6X20 KIT (4PIECES) | 1 |
| 3 | 4213752 | LANTERN FT100 HELIX KIT | 1 |
| 3.1 | | > LANT-MOT-VMI-ReDTC6"-FT100-MACHINED+CATA | 1 |
| 3.2 | 4184852 | > EYELET CPL.FT HELIX (2 PIECES) | 1 |
| 3.3 | 4213713 | > COUPLING PROTECTOR FT85/100 HELIX KIT | 1 |
| 4 | 4178578 | COUPLING D.12XD.19 FT100 KIT | 1 |
| 6 | 4178579 | STUD BOLT M12X317 KIT | 1 |
| 6.1 | | > TIE BOLT M12-317x18x30-1.4057 | 1 |
| 6.2 | 2094647 | > NUT M12 M12 ISO4032 VP. | 1 |
| 6.3 | 2123557 | > WASHER CS-12.4-24-1.6-NFE25 (4 PIECES) | 1 |
| 7 | 4212722 | STATIONARY RING HOLDER HELIX D23 ReDTC | 1 |
| 7.2 | 4212720 | > STATIONARY RING HOLDER HELIX D23 VP. | 1 |
| 7.3 | 4176513 | > O-RING FOR PUMP JACKET VP. | 1 |
| 8 | 4212724 | FILING/PURGING PLUG HELIX ReDTC KIT | 1 |
| 8.1 | | > FILLING PLUG MVI6"-304 | 1 |
| 8.2 | 4177800 | > O-RING EPDM PLUG HELIX VP. | 1 |
| 9 | 4212726 | MECH.SEAL HELIX V2/4 O/E ReDTC KIT | 1 |
| 9.1 | 4178563 | > M.SEAL.HELIX2-4 O/E VP. | 1 |
| 7.3 | 4176513 | > O-RING FOR PUMP JACKET VP. | 1 |
| 10 | 4178580 | HOUSING PIPE D.152X184 1.4301 KIT | 1 |
| 7.3 | 4176513 | > O-RING FOR PUMP JACKET VP. | 1 |
| 10.1 | | > HOUSING-PIPE Ø152-M+205/405-304 | 1 |
| 11 | 4178566 | CENTERING STAGE-RETURN HELIX4 1.4307 VP | 1 |
| 12 | 4212729 | SHAFT EQUIPMENT HELIX V2/4 ReDTC KIT | 1 |
| 12.1 | | > NUT-H-M8-STAINLESS-STEEL A4-70 | 1 |
| 12.2 | | > SHAFT END WASHER Ø8/Ø12 316L | 1 |
| 12.3 | | > 1/2-SNAP-RING-2/4M3-316L | 1 |
| 12.4 | | > STOP-RUSH-1/2-D12xd2-M+316 | 1 |
| 4.11 | | > SCREW CHC-M6X14-8.8-ISO4762-GEOMET500A | 1 |
| 4.12 | | > WASHER D.24 L6U ZINK | 1 |
| 13 | | HYDRAULIC HELIX V 405 1.4307 | 1 |

| Item | Article no. | Description | Quantity |
|---|---|---|---|
| 14 | 4213746 | SHAFT D.12X256 HELIX 1.4057 VP. | 1 |
| 15 | 4174079 | PUMP HOUSING HELIX DN32 PN16 1.4301 KIT | 1 |
| 7.3 | 4176513 | > O-RING FOR PUMP JACKET VP. | 1 |
| 15.1 | | > BLASTING PPE HOUSING V-PN16-DN32-5"-304 | 1 |
| 15.2 | 4217889 | > COUNTER FLANGE-G1"-PN16-GJL KIT | 1 |
| 15.3 | 4171321 | > PRIMING/DRAIN PLUG EPDM HELIX KIT | 1 |
| 16 | 4177964 | BASEPLATE HELIX V2/4/6 PN16 VP. | 1 |

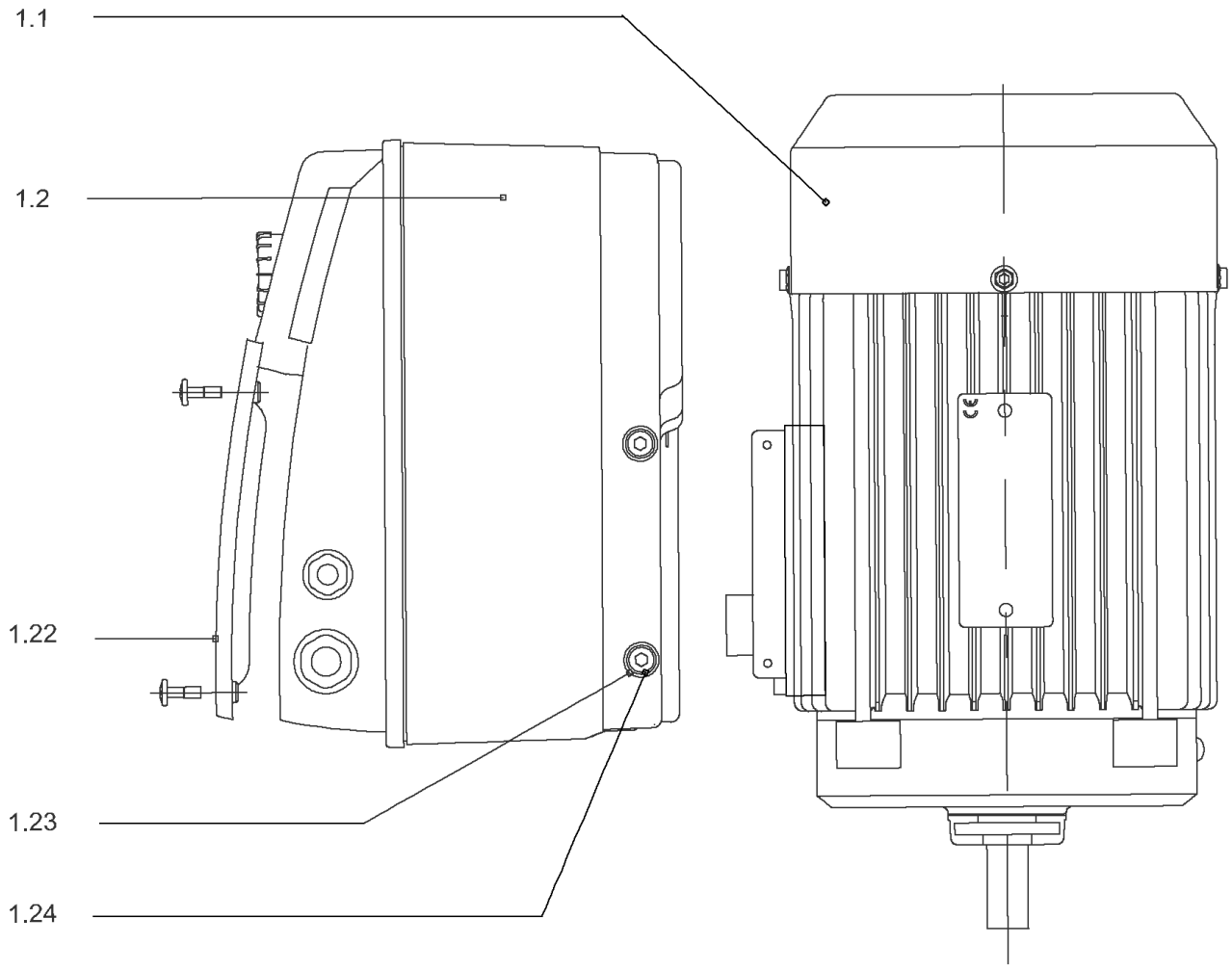
1.1
1.2
1.22
1.23
1.24

## DRIVE HELIX-VE405-IE4-WE KIT

| Item | Article no. | Description | Quantity |
|---|---|---|---|
| 1.1 | 4207916 | MOTOR 1.1/2/80 3~ 380V 60HZ IE4 WE VP. | 1 |
| | | SPARE PARTS MOTOR:ON REQUEST | 1 |
| 1.2 | 4209598 | MODULE HELIX-VE405-IE4-WE KIT | 1 |
| 1.22 | 2054372 | > MODULE COVER TL1,TL2+GASKET KIT | 1 |
| 1.23 | 4215716 | > SCREW M5X16 DIN912 8.8 A2A (4pieces) VP. | 1 |
| 1.24 | 2057978 | > RONDELLE A5,3 DIN6797 FST ZN (4 PIECES) | 1 |

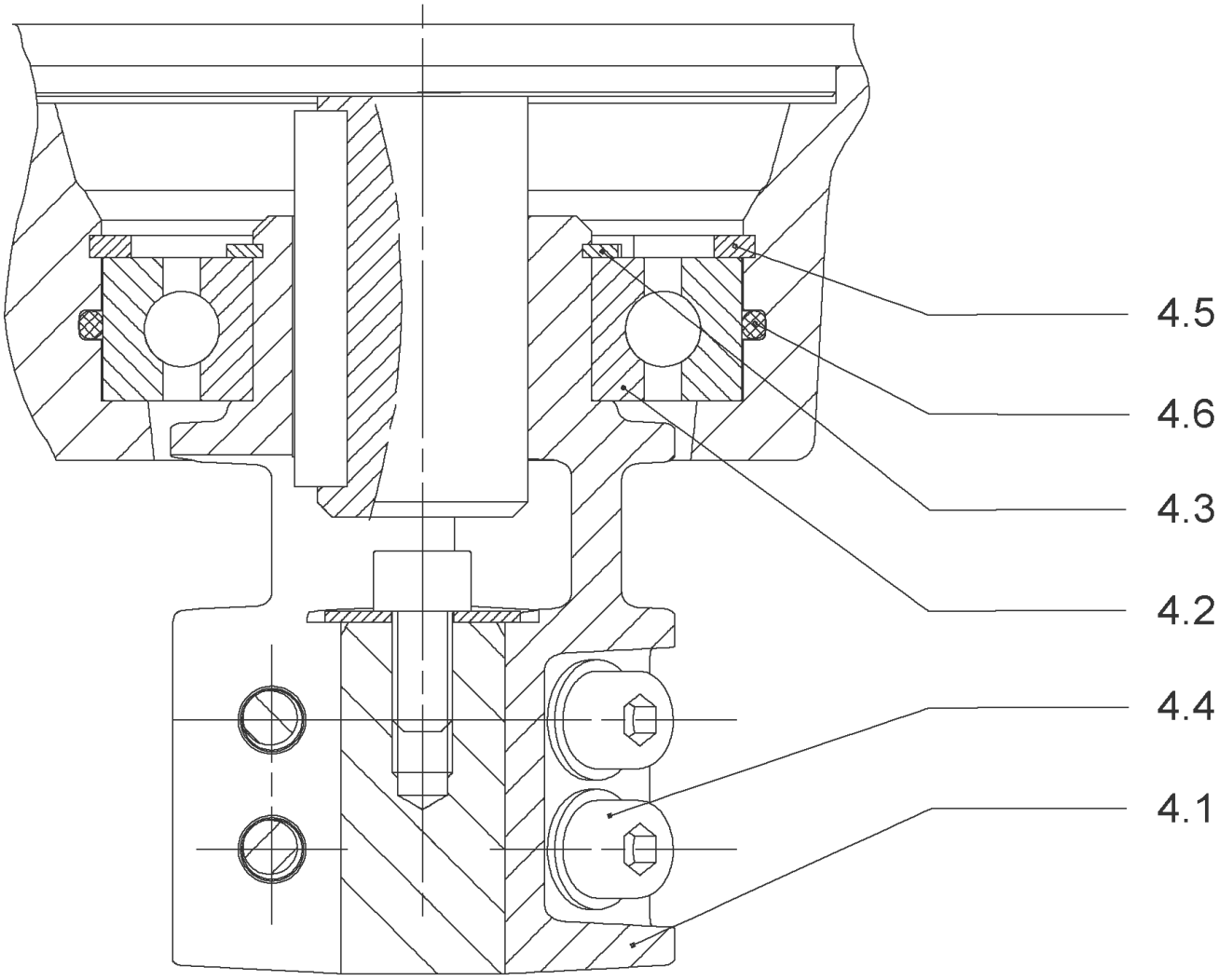
4.5
4.6
4.3
4.2
4.4
4.1

## COUPLING D.12XD.19 FT100 KIT (4178578)

| Item | Article no. | Description | Quantity |
|---|---|---|---|
| 4.1 | | COUPLING-M+ Ø12XØ19-FT100-MACHINED | 1 |
| 4.3 | 4234249 | CIRCLIP-FOR-SHAFT-D30x1.5 VP. | 1 |
| 4.2 | 2130977 | BALL BEARING 6206/ZZ-C3(HT)VP. | 1 |
| 4.4 | 4212716 | SCREW M6X20 KIT (4PIECES) | 1 |
| 4.5 | 4234250 | CIRCLIP-D62x2 VP. | 1 |
| 4.6 | 4234245 | O-RING 63X3 VP. | 1 |
| | | CONTACT-WASHER-6ETR-6,1x12,2x1,8-STEEL | 4 |

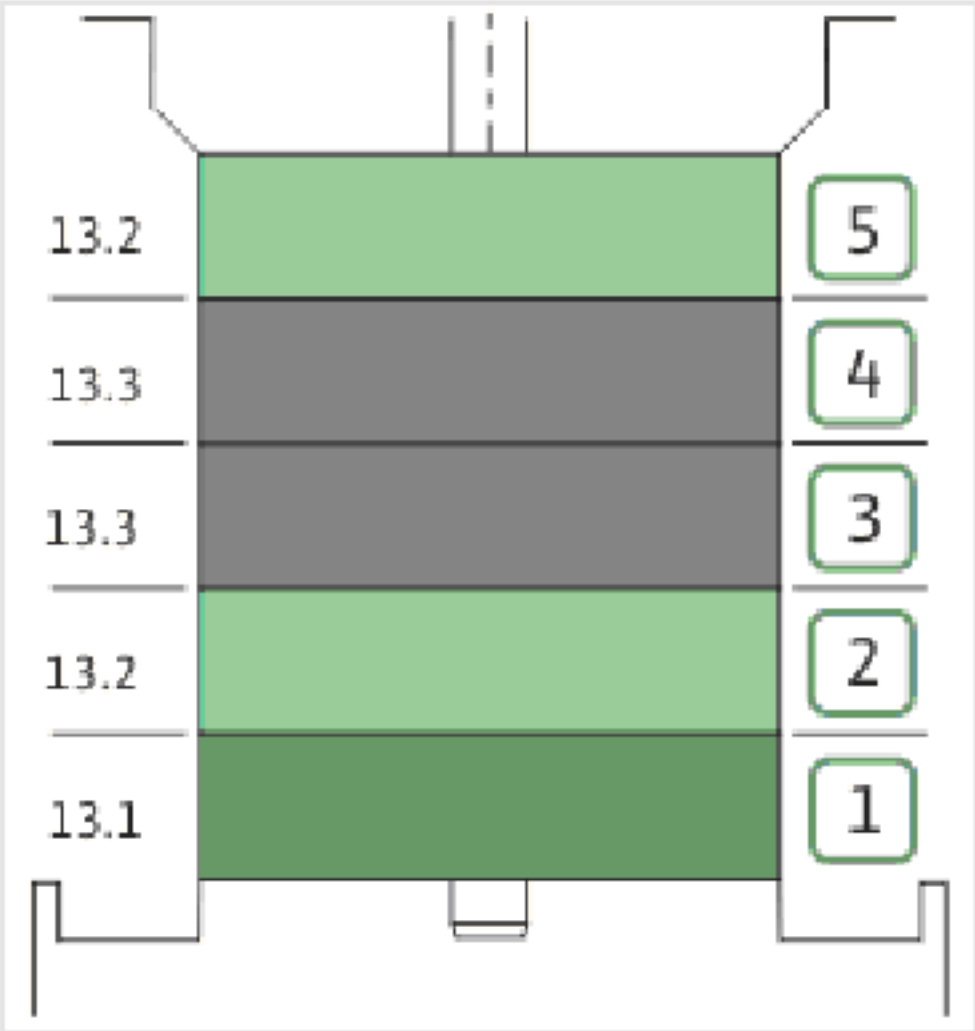
13.2
13.3
13.3
13.2
13.1
5
4
3
2
1

| Item | Article no. | Description | Quantity |
|---|---|---|---|
| 13.1 | 4178570 | STAGE HELIX 4 1.4301 KIT | 1 |
| | | > MACH.STG-CASING-WOGV-WNR-M+2-4-304 | 1 |
| | | > IMPELLER-M+4-304 | 1 |
| 13.2 | 4178569 | STAGE BEARING HELIX 4 1.4301 KIT | 1 |
| | | > MACH.BEARING-STG-CASING-WNR-M+4-304 | 1 |
| | | > IMPELLER-M+4-304 | 1 |
| | | > SHAFT SLEEVE SPACER Ø15,35x10,305-304 | 1 |
| | | > SHAFT-SLEEVE-D12xD16x14-CW | 1 |
| 13.3 | 4178574 | INTER STAGE HELIX4 1.4301< 15 stages KIT | 1 |
| | | > MACH.STD-STG-CASING-WGV+NR-M+4-304 | 1 |
| | | > IMPELLER-M+4-304 | 1 |
| | | > IMPELLER SPACER Ø12,05X14,85-L24,285-304 | 1 |

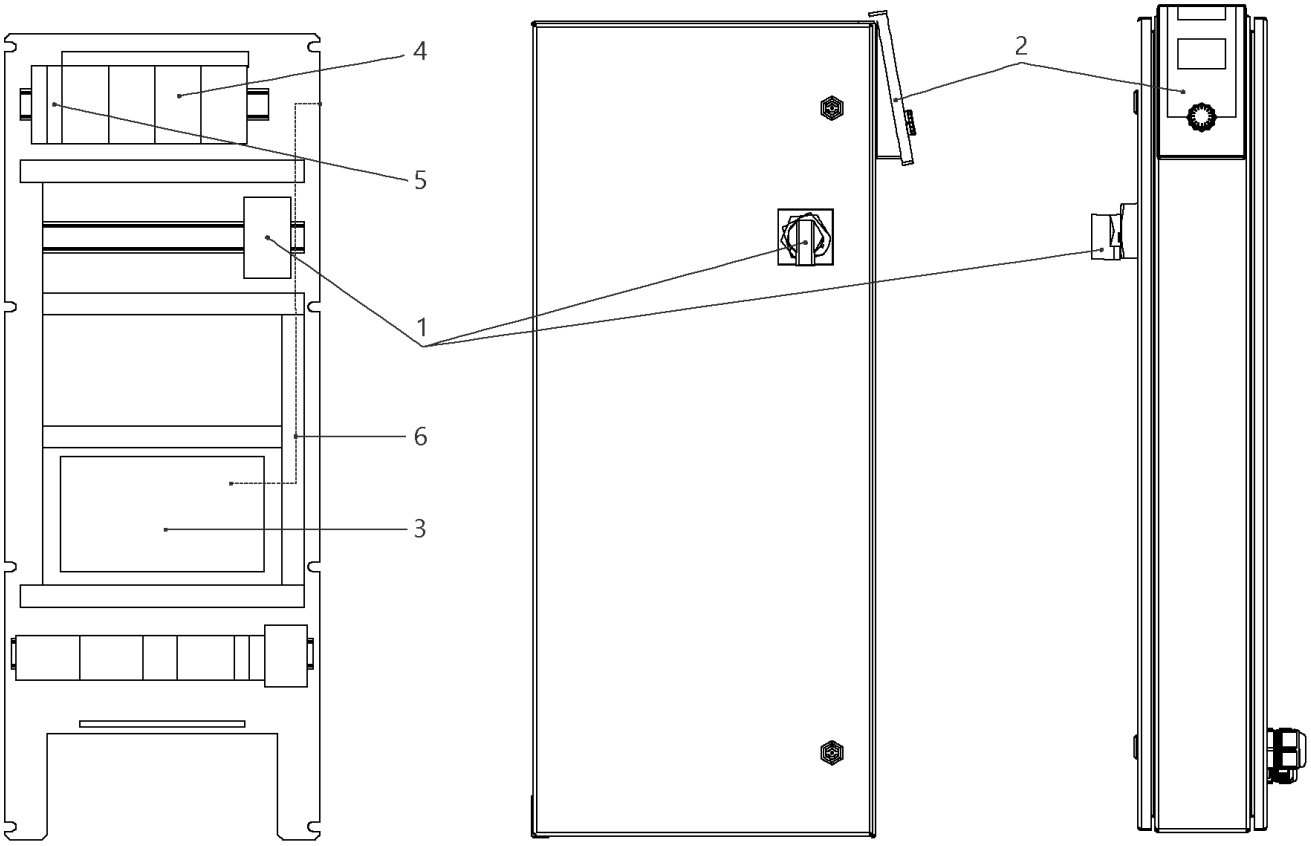
4
5
1
6
3
2

## W-CTRL-SCE-B-4x1,1KW-T4-FM-ND2

| Item | Article no. | Description | Quantity |
|---|---|---|---|
| 1 | 2104470 | MAIN SWITCH OT40F3 L250 KIT | 1 |
| 2 | 4184784 | CONTROL PANEL HMI SC KIT | 1 |
| 2 | 4185259 | ASSEMBLY DISPLAY SC PKG VP. | 1 |
| 3 | 4185257 | ASSEMBLY CPU SCe Booster VP. | 1 |
| 4 | 2051217 | AUTOM.CIRCUIT BREAKER S203 B16 TO7,5kW | 1 |
| 5 | 2046288 | CIRCUIT BREAKER S201 B16 | 1 |
| 6 | 4194956 | PATCH CABLE RJ45 CAT6 1,0M BLUE SC-PANEL | 1 |

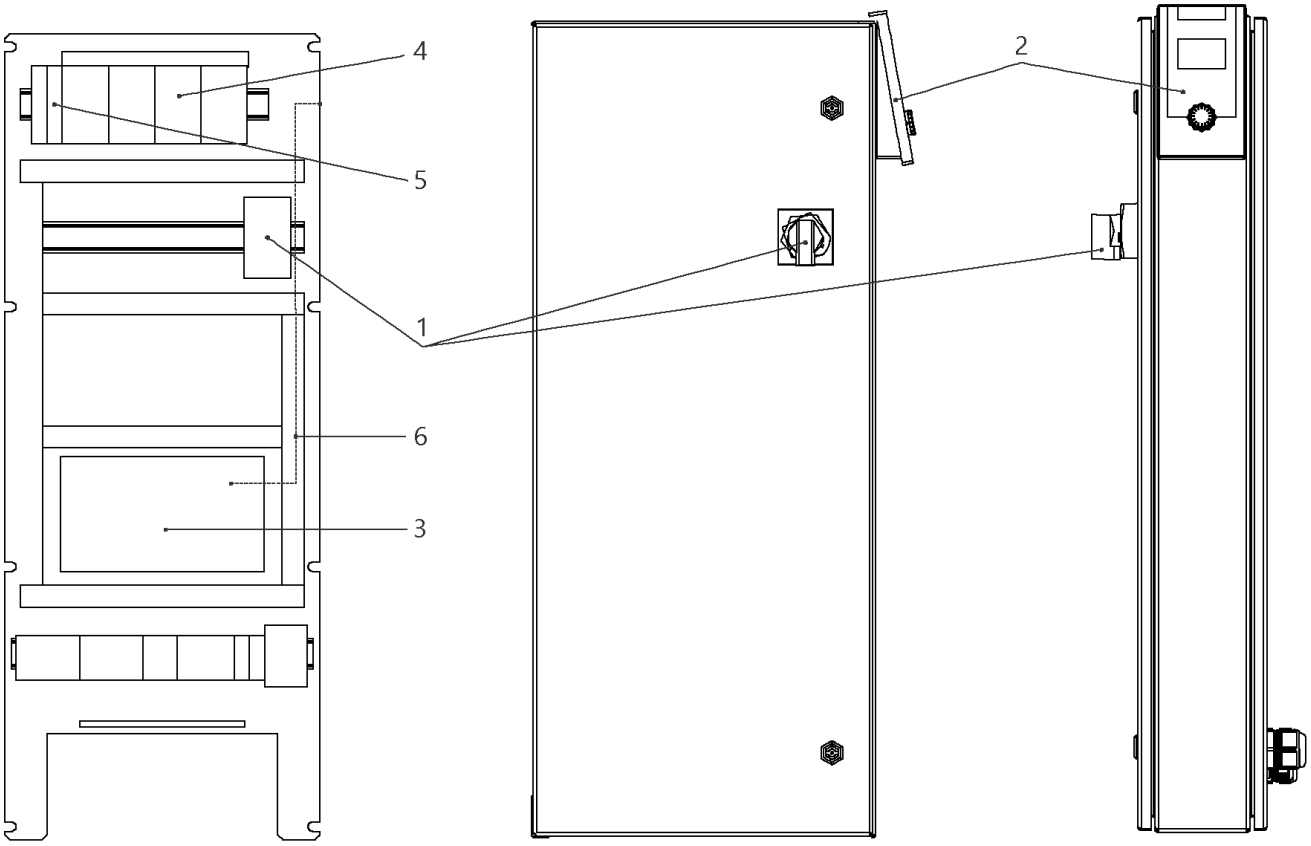
4
5
1
6
3
2

## W-CTRL-SCE-B-4x0,55-1,5KW-T4-FM-ND1

| Item | Article no. | Description | Quantity |
|---|---|---|---|
| 1 | 2104470 | MAIN SWITCH OT40F3 L250 KIT | 1 |
| 2 | 4184784 | CONTROL PANEL HMI SC KIT | 1 |
| 2 | 4185259 | ASSEMBLY DISPLAY SC PKG VP. | 1 |
| 3 | 4185257 | ASSEMBLY CPU SCe Booster VP. | 1 |
| 4 | 2051217 | AUTOM.CIRCUIT BREAKER S203 B16 TO7,5kW | 1 |
| 5 | 2046288 | CIRCUIT BREAKER S201 B16 | 1 |
| 6 | 4197081 | CABLE RJ45 CAT6 0,5M RED SC-PANEL VP. | 1 |

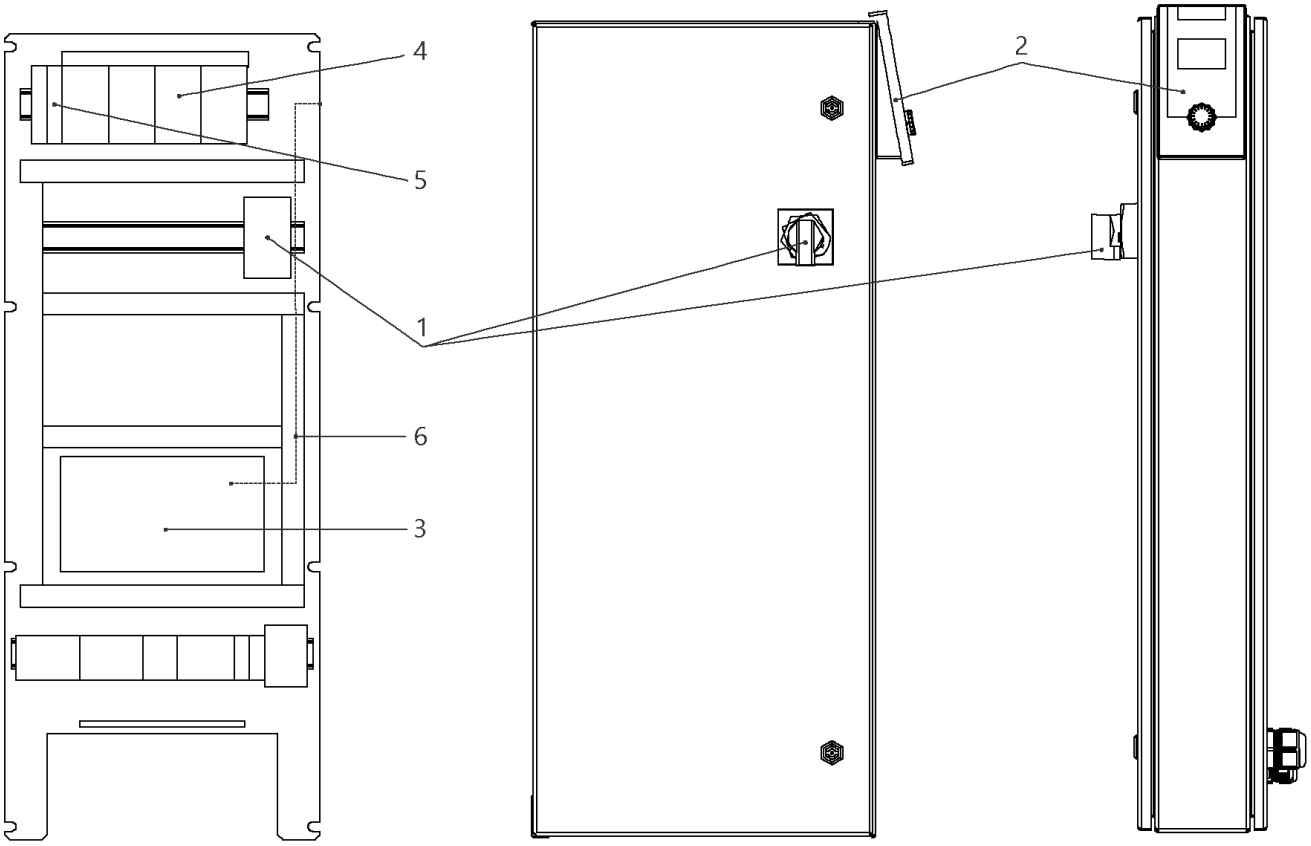
4
5
1
6
3
2

## W-CTRL-SCE-B-4x10A-T34-FM-ND1-AVC-PKG (2541915)

| Item | Article no. | Description | Quantity |
|---|---|---|---|
| 1 | 2104473 | MAIN SWITCH OT63F3 L105 KIT | 1 |
| 2 | 4184784 | CONTROL PANEL HMI SC KIT | 1 |
| 2 | 4185259 | ASSEMBLY DISPLAY SC PKG VP. | 1 |
| Note: DISPLAY ALONE / PLATINE SEULE | | | |
| 3 | 4185257 | ASSEMBLY CPU SCe Booster VP. | 1 |
| 5 | 2046288 | CIRCUIT BREAKER S201 B16 | 1 |
| 4 | 2119861 | AUTOMATIC CIRCUIT BREAKER S203 B13 3POL. | 1 |
| 6 | 4197081 | CABLE RJ45 CAT6 0,5M RED SC-PANEL VP. | 1 |

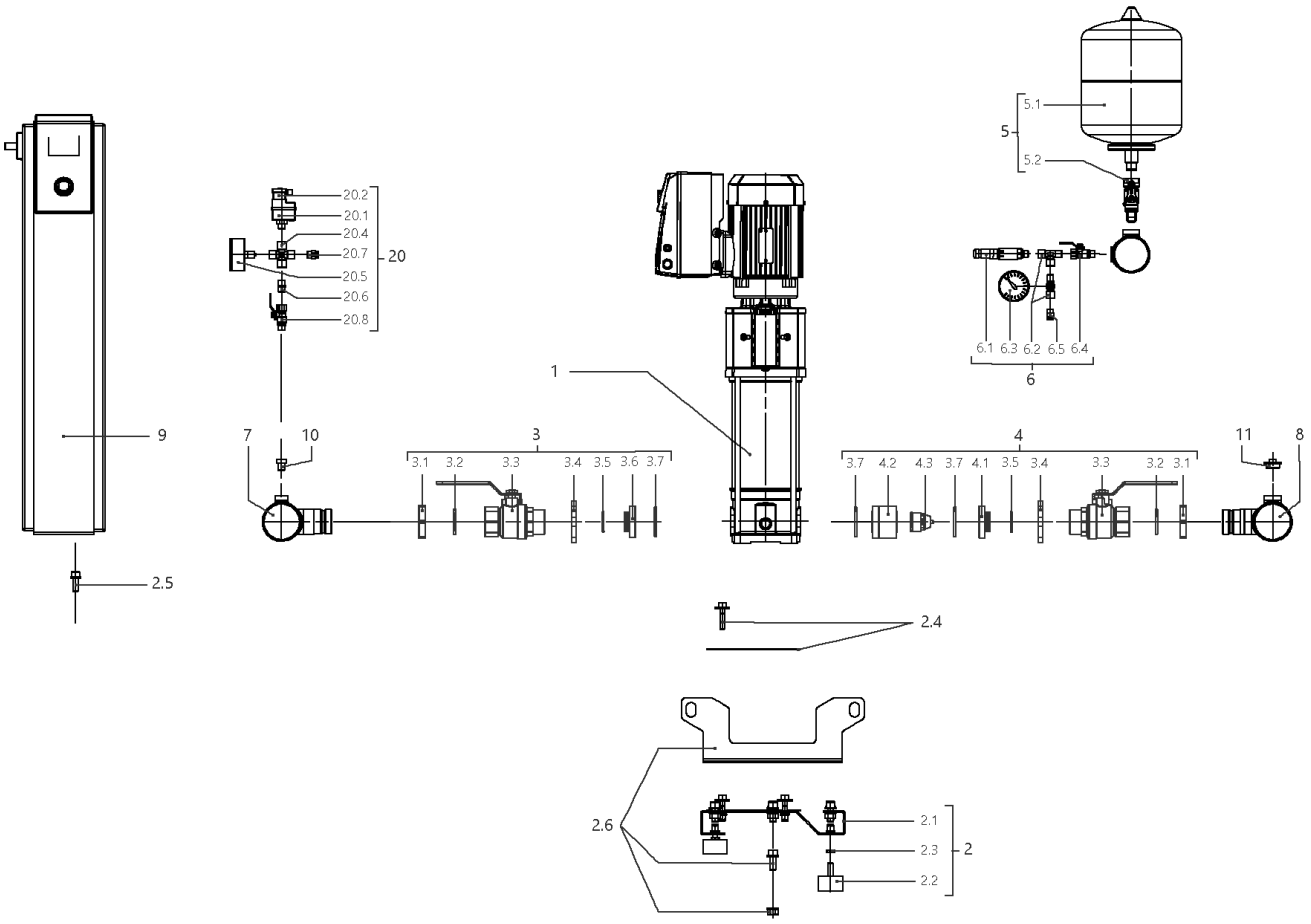
5.1
5
5.2
20.2
20.1
20.4
20.7
20
20.5
20.6
20.8
6.1 6.3 6.2 6.5 6.4
6
1
9
7
10
3
3.1 3.2 3.3 3.4 3.5 3.6 3.7
4
3.7 4.2 4.3 3.7 4.1 3.5 3.4 3.3 3.2 3.1
11
8
2.5
2.4
2.6
2.1
2.3
2
2.2

## SiBoost Smart 4HELIX VE407 (2537347)

| Item | Article no. | Description | Quantity |
|---|---|---|---|
| 1 | | HELIX VE407-1/16/E/S | 1 |
| Note: TO / BIS / JUSQU'AU 31/03/2016 | | | |
| 1 | 4201573 | HELIX VE407-1/16/E/S | 1 |
| Note: FROM / AB / À PARTIR DU 01/04/2016 | | | |
| 2 | 4200143 | BASE PLATE DE4 1450x300 KIT | 1 |
| 2.1 | | > BASEPLATE_4x4/6/10V_E300_1450x300BOX_150 | 1 |
| 2.2 | 2028654 | > VIBRATION DAMPER D.50X30 M10X28 | 1 |
| 2.3 | 2028281 | > NUT M10 DIN936 (ISO4035) 17H VZ | 1 |
| 2.4 | 4199875 | > HOLDER PUMP Siboost Helix V2/4 KIT | 1 |
| 2.5 | 4197084 | > HOLDER SWITCHBOX WILO Smart Control KIT | 1 |
| 2.6 | 4197085 | > LIFTING Siboost HELIX SC KIT | 1 |
| 3 | 4199876 | SUCTION SIDE Siboost Helix V2/4/6 KIT | 1 |
| 3.1 | 2032610 | > NUT G11/4 MS VP. | 1 |
| 3.2 | 2032611 | > O-RING ID.36,09X3,53N DIN3771 E7502 | 1 |
| 3.3 | 2507646 | > BALL VALVE G11/4"M-F-W.HANDLE 1/4-TURN | 1 |
| 3.4 | 2032613 | > SCREWED FLANGE G1 1/4" LK-75 ST37VZ | 1 |
| 3.5 | 2032614 | > O-RING ID.29,82X2,62N DIN3771 E7502 | 1 |
| 3.6 | 2032615 | > SPACER F.I/A KUH.DN32 CUZN | 1 |
| 3.7 | 2032616 | > O-RING ID.44X3,53N DIN3771 E7502 | 1 |
| 4 | 4199877 | DELIVERY SIDE Siboost Helix V2/4/6 KIT | 1 |
| 3.1 | 2032610 | > NUT G11/4 MS VP. | 1 |
| 3.2 | 2032611 | > O-RING ID.36,09X3,53N DIN3771 E7502 | 1 |
| 3.3 | 2507646 | > BALL VALVE G11/4"M-F-W.HANDLE 1/4-TURN | 1 |
| 3.4 | 2032613 | > SCREWED FLANGE G1 1/4" LK-75 ST37VZ | 1 |
| 3.5 | 2032614 | > O-RING ID.29,82X2,62N DIN3771 E7502 | 1 |
| 4.1 | 2058116 | > SPACER F.I/A KUH.DN32 CUZN | 1 |
| 3.7 | 2032616 | > O-RING ID.44X3,53N DIN3771 E7502 | 1 |
| 4.2 | 2058115 | > HOUSING RFV(RV-IN) DN32 SGS/DRS | 1 |
| 4.3 | 2027870 | > NON-RETURN-DEVICE INSERT DN32(MTR) | 1 |
| 5 | 2032642 | DIAPHREM TANK 8L/PN16 DIN4807/T5 KIT | 1 |
| 5.1 | 2045914 | > DIAPHREM TANK 8L TYP-DD 16BAR | 1 |
| 5.2 | 2027853 | > FLOW FITTING G3/4 FOR DIAPHRAGM VES. | 1 |
| 6 | 4197076 | PRESSURE SENSOR/ GAUGE 0-16BAR KIT | 1 |
| 6.1 | 2085909 | > PRESS.SENSOR 1/4" 0-16BAR 4-20MA VP. | 1 |

| Item | Article no. | Description | Quantity |
|---|---|---|---|
| 6.2 | 4197077 | > T-PIECE 1/4" VP. | 1 |
| 6.3 | 2028692 | > PRESSURE GAUGE NG63-PN16-G1/4 | 1 |
| 6.4 | 2028291 | > BALL TAP R1/4" PN42 GIACOMINI R254DL | 1 |
| 6.5 | 2028691 | > BLOWGUN 1/4" MS 30BAR VP. | 1 |
| 7 | 4200144 | PIPE DE4 21/2''-4x11/4"+2x1/4x900 VP. | 1 |
| 8 | 4200145 | PIPE DE4 21/2''-4x11/4"+2x1/4+1x3/4x900 | 1 |
| 9 | | W-CTRL-SCE-B-4x0,55-1,5KW-T4-FM-ND1 | 1 |
| Note: TO / BIS / JUSQU'AU 18/05/2014 | | | |
| 9 | 2541915 | W-CTRL-SCE-B-4x10A-T34-FM-ND1-AVC-PKG | 1 |
| Note: FROM / AB / À PARTIR DU 19/05/2014 | | | |
| 10 | 4197079 | PLUG G1/4"x10 AISI304 KIT | 1 |
| 11 | 2032654 | PLUG R3/4" MS VIEGA 1751 | 1 |
| 20 | | ASSEMBLY WMS. DE-EB. +VP | 1 |
| 20.1 | 2028652 | > PRESSURE SWITCH PS3-ASR 1/(1,3) VP. | 1 |
| 20.2 | 2130983 | > PLUG PS3-415 WITH KABEL 1,5M 2NO VP. | 1 |
| 20.4 | 2028290 | > CROSSPIECE R1/4" MS-NICKEL | 1 |
| 20.5 | 2028687 | > PRESSURE GAUGE NG63 R1/4" HI.0-6BAR | 1 |
| 20.6 | 2054268 | > DUAL NIPPLE G1/4" x G1/4" MS VP. | 1 |
| 20.7 | 2028691 | > BLOWGUN 1/4" MS 30BAR VP. | 1 |
| 20.8 | 2028291 | > BALL TAP R1/4" PN42 GIACOMINI R254DL | 1 |

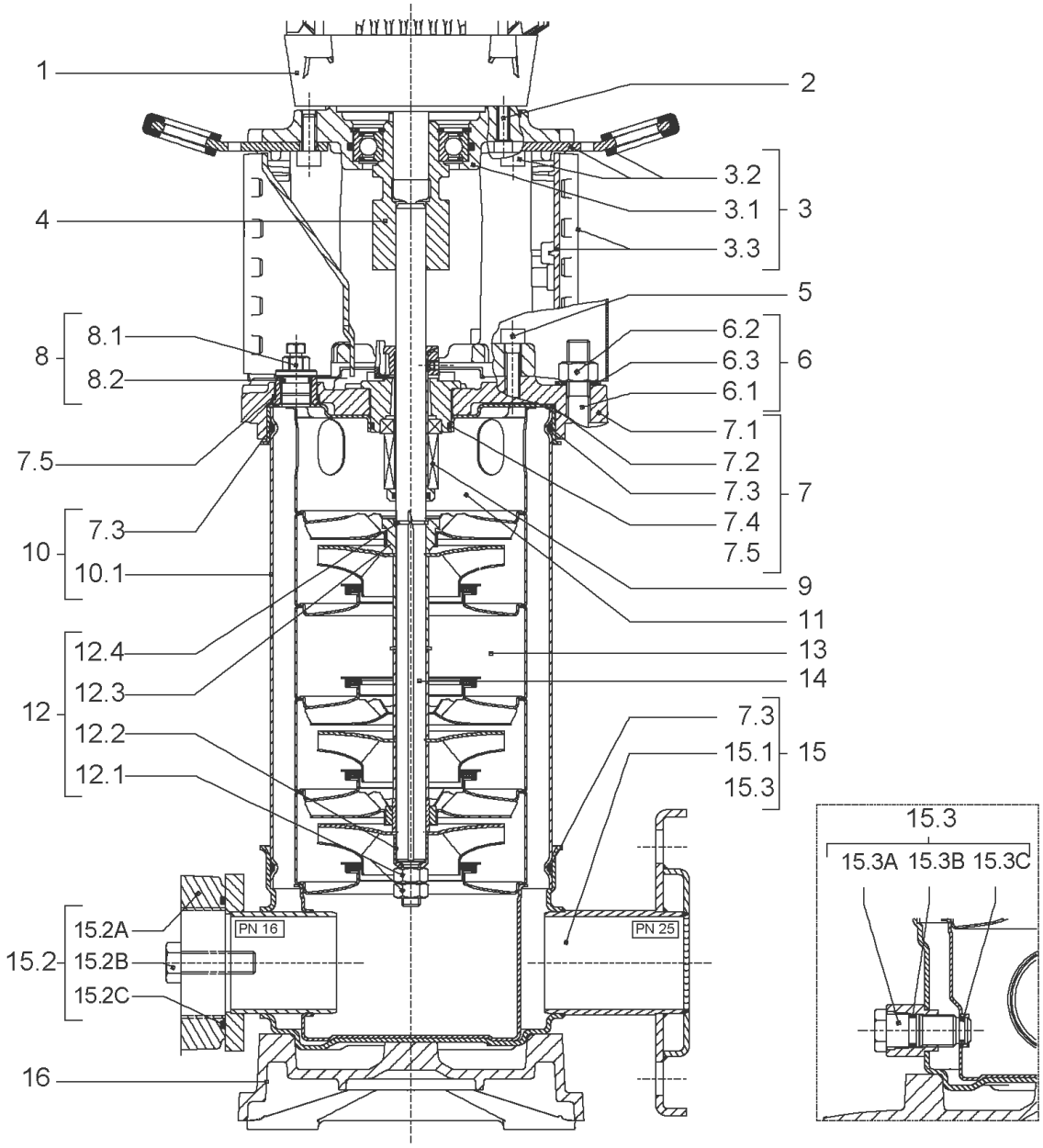
1
2
3.2
3.1
3
3.3
4
5
8.1
8
8.2
6.2
6.3
6
6.1
7.1
7.5
7.2
7.3
7
7.4
7.3
10
7.5
10.1
9
11
12.4
13
12.3
14
12
12.2
7.3
15.1
15
12.1
15.3
15.3
15.3A 15.3B 15.3C
15.2A
PN 16
PN 25
15.2
15.2B
15.2C
16

| Item | Article no. | Description | Quantity |
|---|---|---|---|
| 1 | | DRIVE HELIX-VE407-IE2-WE KIT | 1 |
| Note: MOTOR BRAND WILO ELEC | | | |
| 1 | | DRIVE HELIX-VE407-IE4-WE KIT | 1 |
| Note: MOTOR BRAND WILO ELEC | | | |
| 2 | 4159703 | SCREW M8X40 (4 PIECES) | 1 |
| 3 | 4172795 | LANTERNE FT115 HELIX KIT | 1 |
| 3.1 | | > M+5_6_LANTERN_ONE-PIECE_FT115_CATA | 1 |
| 3.2 | 2127604 | > EYELET CPL.FT HELIX(2 PIECES) | 1 |
| 3.3 | 4159692 | > COUPLING PROTECTOR FT HELIX KIT | 1 |
| 4 | 4178600 | COUPLING D.12XD.24 FT115 KIT | 1 |
| 5 | 4159707 | SCREW M8X30 (4 PIECES) | 1 |
| 6 | 4178585 | STUD BOLT M12X365 KIT | 1 |
| 6.1 | | > TIE BOLT M12-365x18x30-1.4057 | 1 |
| 6.2 | 2094647 | > NUT M12 M12 ISO4032 VP. | 1 |
| 6.3 | 2123557 | > WASHER CS-12.4-24-1.6-NFE25 (4 PIECES) | 1 |
| 7 | 4210143 | STATIONARY RING HOLDER HELIX 6" EPDM | 1 |
| 7.2 | 2127607 | > STATIONARY RING HOLDER 6" HELIX 1.4301 V | 1 |
| 7.3 | 4176513 | > O-RING FOR PUMP JACKET VP. | 1 |
| 7.4 | 2127603 | > O-RING ID.37,6x2,4 EPDM VP. | 1 |
| 7.5 | 2127602 | > O-RING ID.21,35x2 EPDM VP. | 1 |
| 8 | 4159686 | FILING/PURGING PLUG HELIX EPDM KIT | 1 |
| 9 | 4178564 | SEAL-KIT-HELIX2-4 O/E KIT | 1 |
| 10 | 4178586 | HOUSING-PIPE D.152X235 1.4301 KIT | 1 |
| 7.3 | 4176513 | > O-RING FOR PUMP JACKET VP. | 1 |
| 10.1 | | > HOUSING-PIPE Ø152-M+207/407-304 | 1 |
| 11 | 4178566 | CENTERING STAGE-RETURN HELIX4 1.4307 VP | 1 |
| 12 | 4178568 | SHAFT EQUIPMENT HELIX V2/V4 KIT | 1 |
| 12.1 | | > NUT-H-M8-STAINLESS-STEEL A4-70 | 2 |
| 12.2 | | > SHAFT END WASHER Ø8/Ø12 316L | 1 |
| 12.3 | | > STOP COLLAR OF IMPELLER M+2/4 SINGLEBLOC | 1 |
| 12.4 | | > STOP-RUSH-1/2-D12xd2-M+316 | 2 |
| 13 | | HYDRAULIC HELIX V 407 1.4307 | 1 |
| 14 | 4178587 | SHAFT D.12X358 1.4301 VP. | 1 |
| 15 | 4174079 | PUMP HOUSING HELIX DN32 PN16 1.4301 KIT | 1 |

| Item | Article no. | Description | Quantity |
|---|---|---|---|
| 7.3 | 4176513 | > O-RING FOR PUMP JACKET VP. | 1 |
| 15.1 | | > BLASTING PPE HOUSING V-PN16-DN32-5"-304 | 1 |
| 15.2 | 4217889 | > COUNTER FLANGE-G1"-PN16-GJL KIT | 1 |
| 15.3 | 4171321 | > PRIMING/DRAIN PLUG EPDM HELIX KIT | 1 |
| 16 | 4177964 | BASEPLATE HELIX V2/4/6 PN16 VP. | 1 |

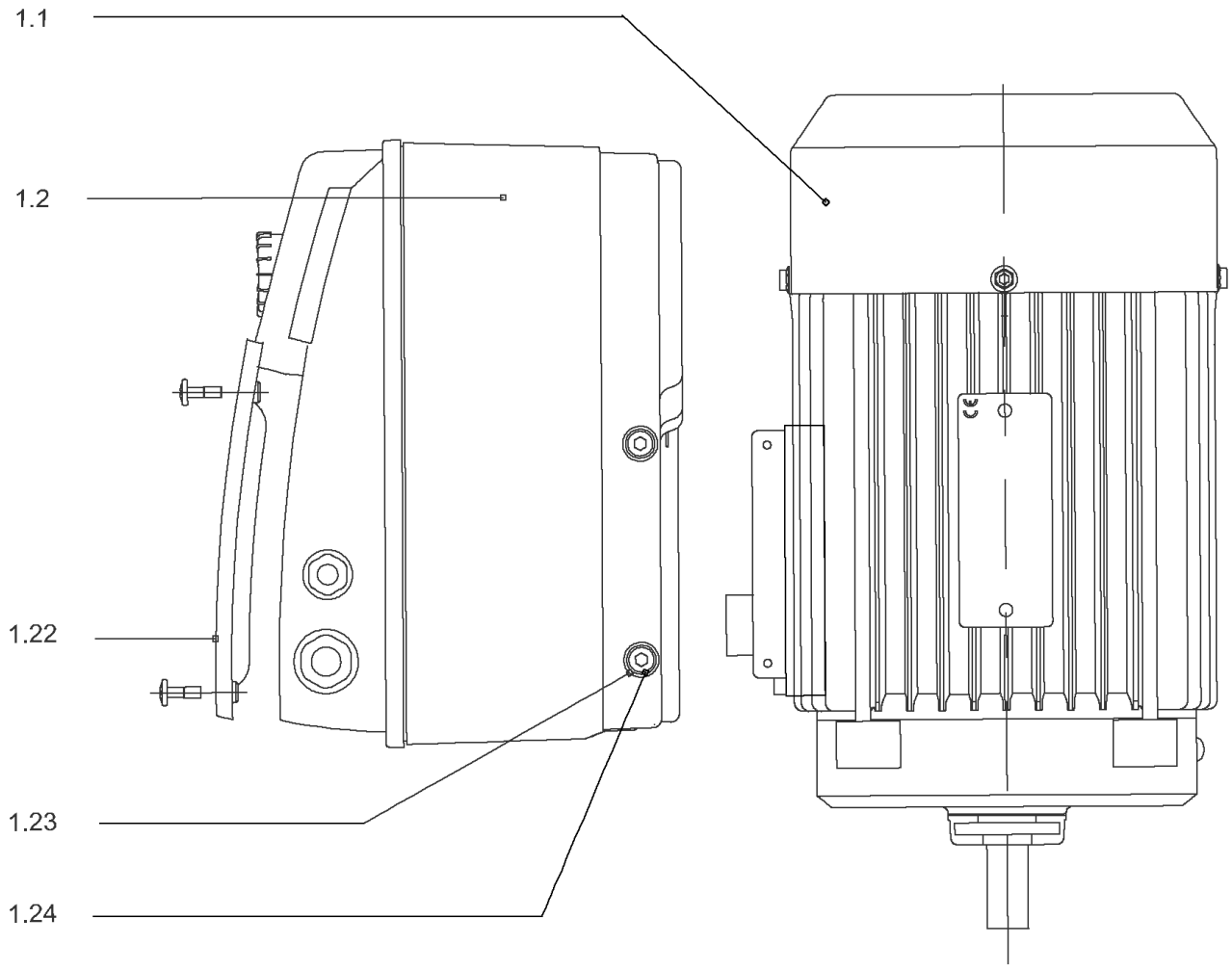
1.1
1.2
1.22
1.23
1.24

## DRIVE HELIX-VE407-IE2-WE KIT

| Item | Article no. | Description | Quantity |
|---|---|---|---|
| 1.1 | | MOTOR 1,5/2/90 3~ 380V 60HZ IE2 WE VP. | 1 |
| Note: no longer available/nicht mehrlieferbar/n'est plus disponible | | | |
| | | SPARE PARTS MOTOR:ON REQUEST | 1 |
| 1.2 | 4184872 | MODULE HELIX-VE407-IE2-WE KIT | 1 |
| 1.22 | 2054227 | > MODULE COVER/GASKET TL3/4 KIT | 1 |
| 1.23 | 4215716 | > SCREW M5X16 DIN912 8.8 A2A (4pieces) VP. | 1 |
| 1.24 | 2057978 | > RONDELLE A5,3 DIN6797 FST ZN (4 PIECES) | 1 |

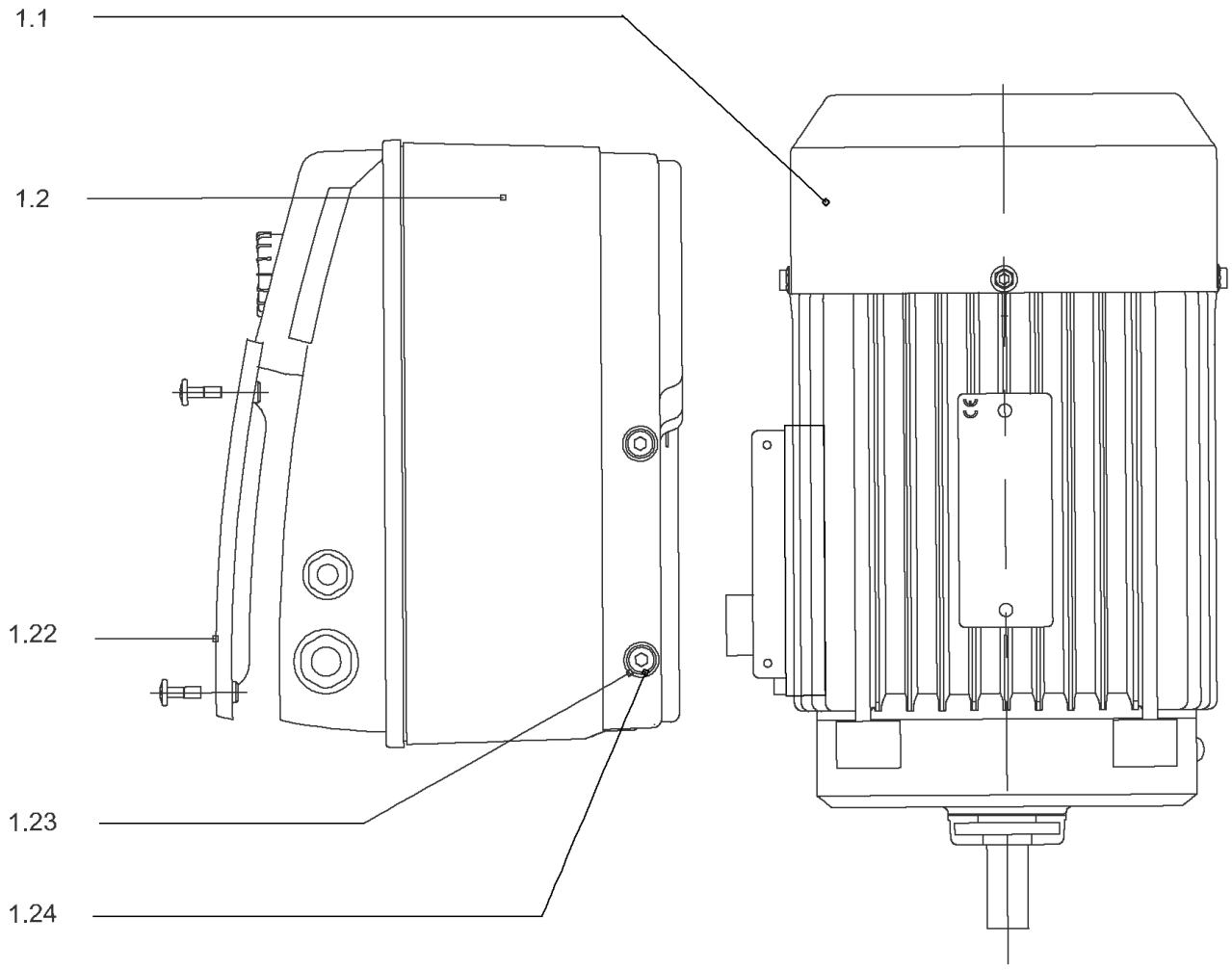
1.1
1.2
1.22
1.23
1.24

## DRIVE HELIX-VE407-IE4-WE KIT

| Item | Article no. | Description | Quantity |
|---|---|---|---|
| 1.1 | 4207918 | MOTOR 1.5/2/90 3~ 380V 60HZ IE4 WE VP. | 1 |
| | | SPARE PARTS MOTOR:ON REQUEST | 1 |
| 1.2 | 4209326 | MODULE HELIX-VE407-IE4-WE KIT | 1 |
| 1.22 | 2054227 | > MODULE COVER/GASKET TL3/4 KIT | 1 |
| 1.23 | 4215716 | > SCREW M5X16 DIN912 8.8 A2A (4pieces) VP. | 1 |
| 1.24 | 2057978 | > RONDELLE A5,3 DIN6797 FST ZN (4 PIECES) | 1 |

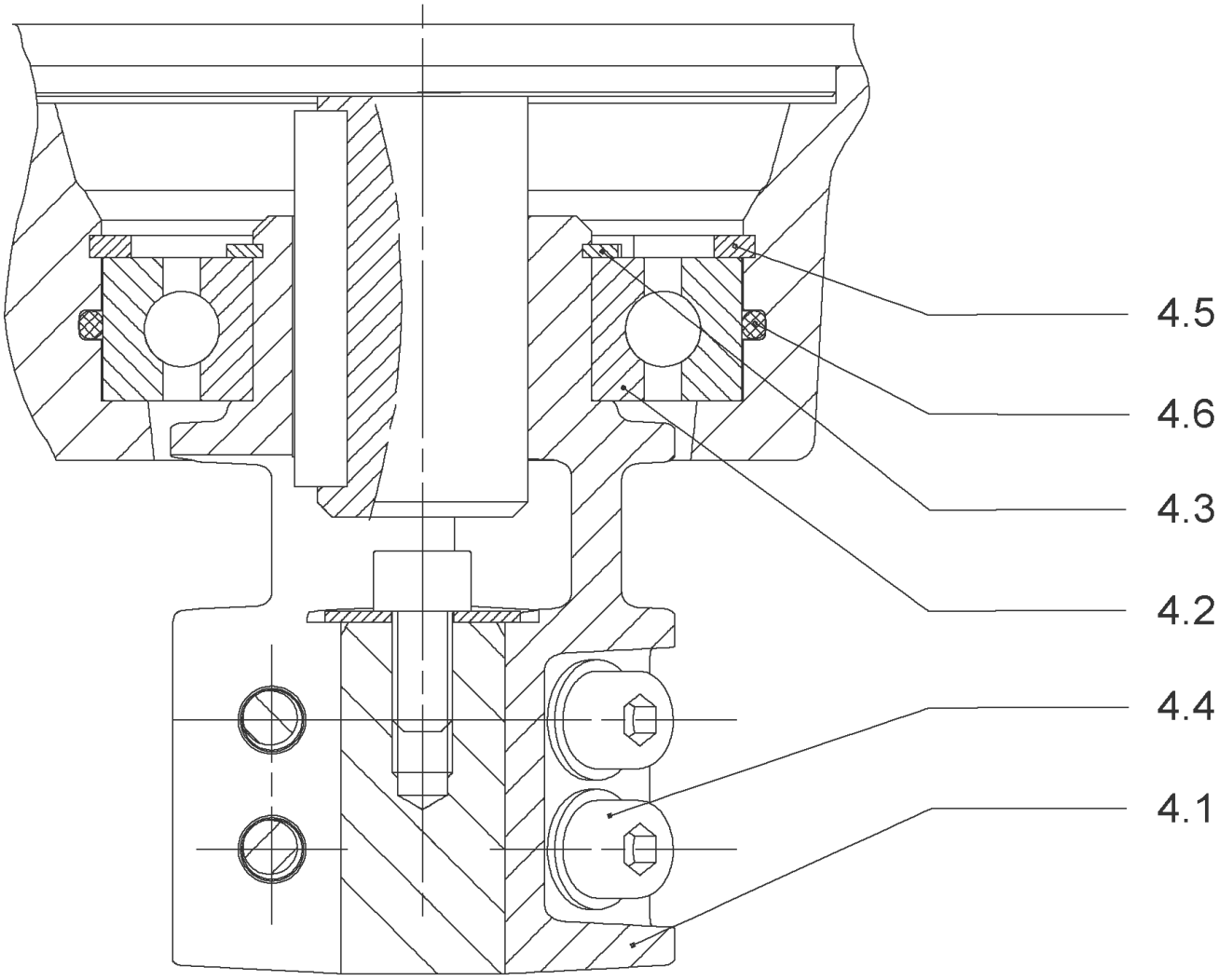
4.5
4.6
4.3
4.2
4.4
4.1

## COUPLING D.12XD.24 FT115 KIT (4178600)

| Item | Article no. | Description | Quantity |
|---|---|---|---|
| 4.1 | | COUPLING-M+ Ø12XØ24-FT115-MACHINED | 1 |
| 4.2 | 2131023 | BALL BEARING 6207/ZZ-C3(HT)VP. | 1 |
| 4.3 | 4234254 | CIRCLIP-FOR-SHAFT-D35x1.5 VP. | 1 |
| 4.4 | 4157726 | SCREW KIT M8X30 (4 PIECES) | 1 |
| 4.5 | 4234251 | CIRCLIP-D72x2.5 VP. | 1 |
| 4.6 | 4234246 | O-RING 72X3 VP. | 1 |
| | | NOMEL CONTACT WASHER 8x16x1,4 STEEL ZC | 1 |

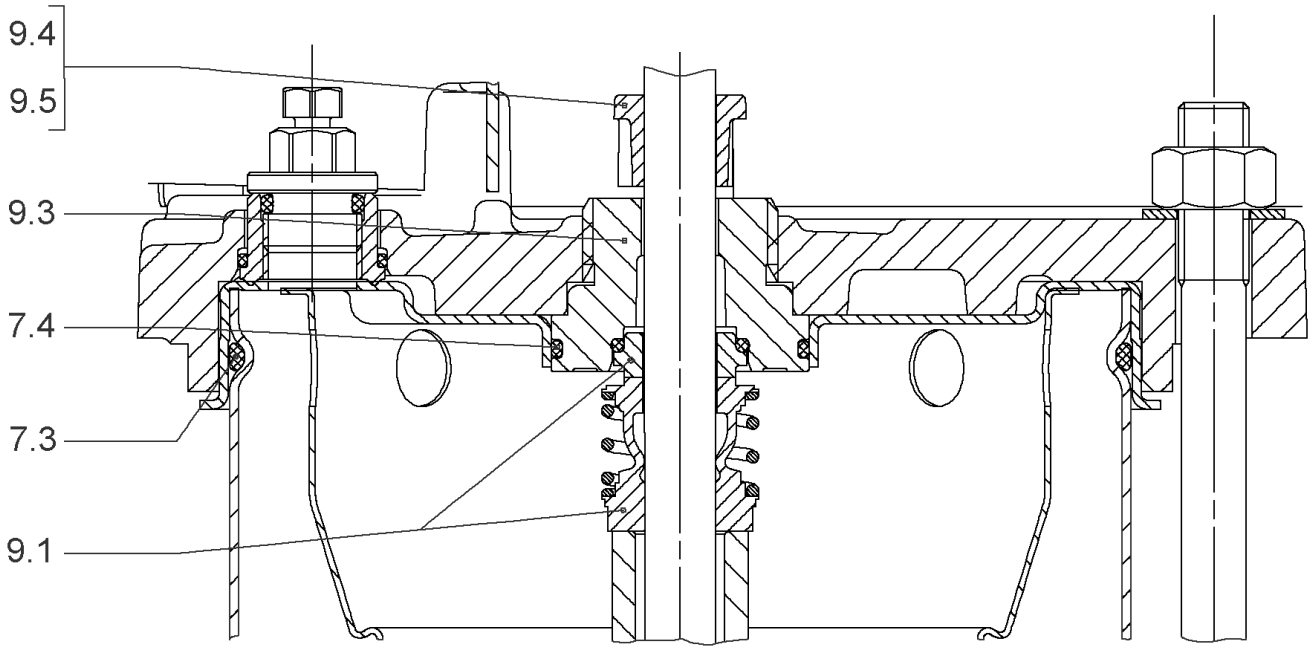
9.4
9.5
9.3
7.4
7.3
9.1

## SEAL-KIT-HELIX2-4 O/E KIT (4178564)

| Item | Article no. | Description | Quantity |
|---|---|---|---|
| 7.3 | 4176513 | O-RING FOR PUMP JACKET VP. | 1 |
| 7.4 | 2127603 | O-RING ID.37,6x2,4 EPDM VP. | 1 |
| 9.1 | 4178563 | M.SEAL.HELIX2-4 O/E VP. | 1 |
| 9.3 | 4178561 | RING HOLDER Ø22 1.4301 VP. | 1 |
| 9.5 | 4178562 | DRIVE RING D.22/12.2X10 MACH.VP. | 1 |
| 9.4 | 4176520 | SCREW CH M5x5 A4-70 ( 3PIECES ) | 1 |

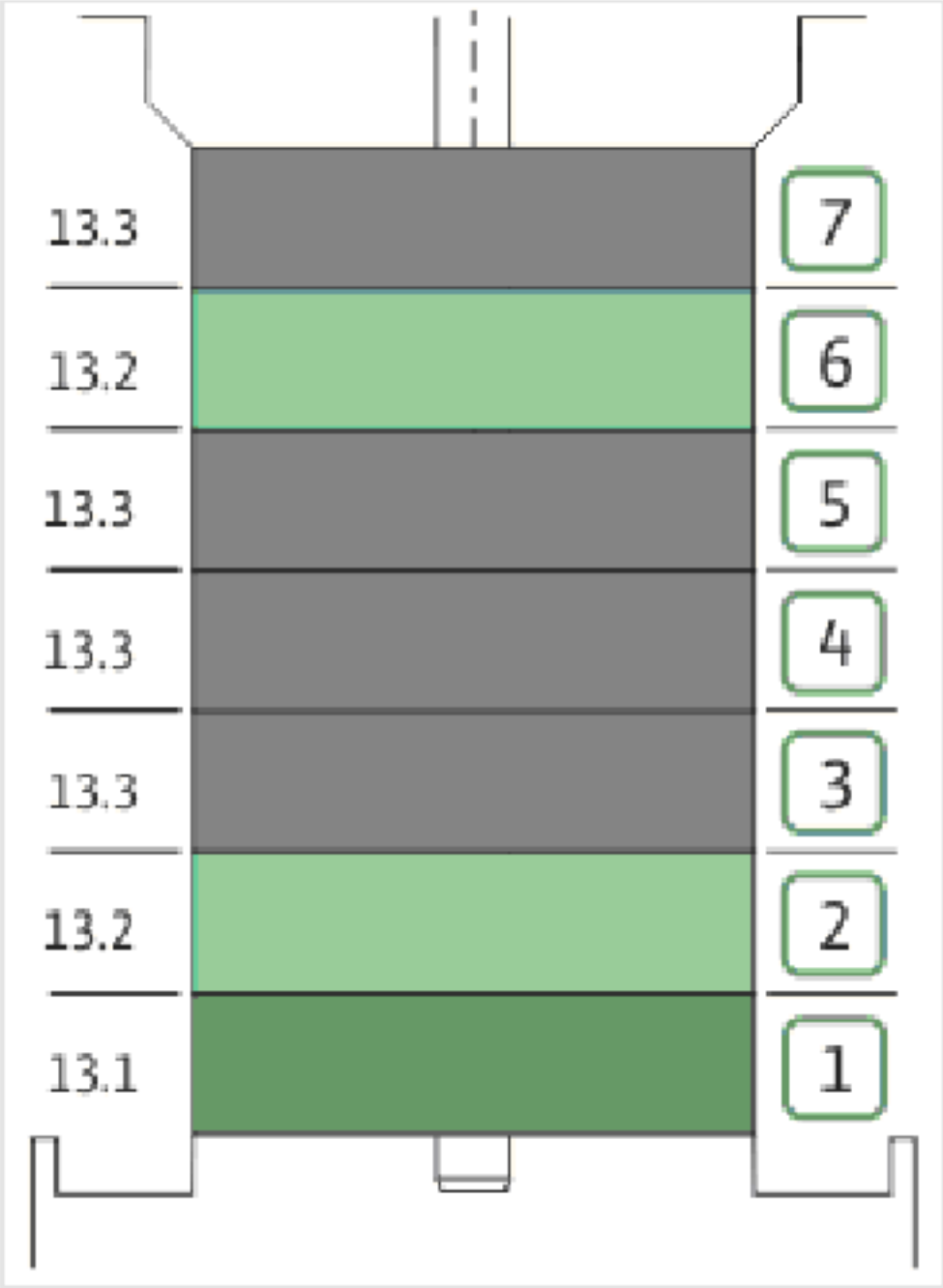
13.3
13.2
13.3
13.3
13.3
13.2
13.1
7
6
5
4
3
2
1

| Item | Article no. | Description | Quantity |
|---|---|---|---|
| 13.1 | 4178570 | STAGE HELIX 4 1.4301 KIT | 1 |
| | | > MACH.STG-CASING-WOGV-WNR-M+2-4-304 | 1 |
| | | > IMPELLER-M+4-304 | 1 |
| 13.2 | 4178569 | STAGE BEARING HELIX 4 1.4301 KIT | 1 |
| | | > MACH.BEARING-STG-CASING-WNR-M+4-304 | 1 |
| | | > IMPELLER-M+4-304 | 1 |
| | | > SHAFT SLEEVE SPACER Ø15,35x10,305-304 | 1 |
| | | > SHAFT-SLEEVE-D12xD16x14-CW | 1 |
| 13.3 | 4178574 | INTER STAGE HELIX4 1.4301< 15 stages KIT | 1 |
| | | > MACH.STD-STG-CASING-WGV+NR-M+4-304 | 1 |
| | | > IMPELLER-M+4-304 | 1 |
| | | > IMPELLER SPACER Ø12,05X14,85-L24,285-304 | 1 |

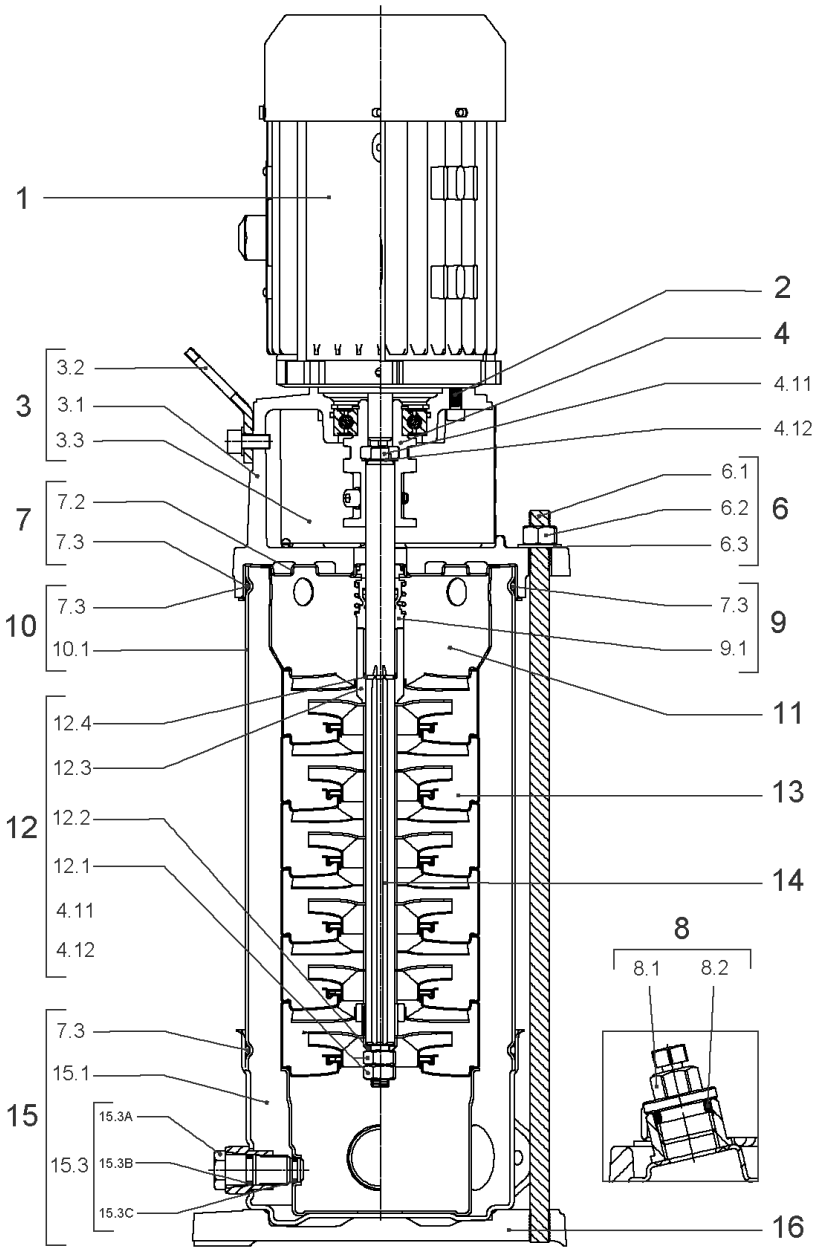
1
2
4
4.11
4.12
3
3.2
3.1
3.3
7
7.2
7.3
10
7.3
10.1
12
12.4
12.3
12.2
12.1
4.11
4.12
15
7.3
15.1
15.3
15.3A
15.3B
15.3C
6
6.1
6.2
6.3
9
7.3
9.1
11
13
14
8
8.1
8.2
16

## HELIX VE407-1/16/E/S (4201573)

| Item | Article no. | Description | Quantity |
|---|---|---|---|
| 1 | | DRIVE HELIX-VE407-IE4-WE KIT | 1 |
| Note: MOTOR BRAND WILO ELEC | | | |
| | | SPARE PARTS MOTOR:ON REQUEST | 1 |
| 2 | 4159707 | SCREW M8X30 (4 PIECES) | 1 |
| 3 | 4213784 | LANTERN FT115 HELIX KIT | 1 |
| 3.1 | | > LANT-MOT-VMI-ReDTC6"-FT115-MACHINED+CATA | 1 |
| 3.2 | 4184852 | > EYELET CPL.FT HELIX (2 PIECES) | 1 |
| 3.3 | 4213782 | > COUPLING PROTECTOR FT115/130 HELIX KIT | 1 |
| 4 | 4178600 | COUPLING D.12XD.24 FT115 KIT | 1 |
| 6 | 4178585 | STUD BOLT M12X365 KIT | 1 |
| 6.1 | | > TIE BOLT M12-365x18x30-1.4057 | 1 |
| 6.2 | 2094647 | > NUT M12 M12 ISO4032 VP. | 1 |
| 6.3 | 2123557 | > WASHER CS-12.4-24-1.6-NFE25 (4 PIECES) | 1 |
| 7 | 4212722 | STATIONARY RING HOLDER HELIX D23 ReDTC | 1 |
| 7.2 | 4212720 | > STATIONARY RING HOLDER HELIX D23 VP. | 1 |
| 7.3 | 4176513 | > O-RING FOR PUMP JACKET VP. | 1 |
| 8 | 4212724 | FILING/PURGING PLUG HELIX ReDTC KIT | 1 |
| 8.1 | | > FILLING PLUG MVI6"-304 | 1 |
| 8.2 | 4177800 | > O-RING EPDM PLUG HELIX VP. | 1 |
| 9 | 4212726 | MECH.SEAL HELIX V2/4 O/E ReDTC KIT | 1 |
| 9.1 | 4178563 | > M.SEAL.HELIX2-4 O/E VP. | 1 |
| 7.3 | 4176513 | > O-RING FOR PUMP JACKET VP. | 1 |
| 10 | 4178586 | HOUSING-PIPE D.152X235 1.4301 KIT | 1 |
| 7.3 | 4176513 | > O-RING FOR PUMP JACKET VP. | 1 |
| 10.1 | | > HOUSING-PIPE Ø152-M+207/407-304 | 1 |
| 11 | 4178566 | CENTERING STAGE-RETURN HELIX4 1.4307 VP | 1 |
| 12 | 4212729 | SHAFT EQUIPMENT HELIX V2/4 ReDTC KIT | 1 |
| 12.1 | | > NUT-H-M8-STAINLESS-STEEL A4-70 | 1 |
| 12.2 | | > SHAFT END WASHER Ø8/Ø12 316L | 1 |
| 12.3 | | > 1/2-SNAP-RING-2/4M3-316L | 1 |
| 12.4 | | > STOP-RUSH-1/2-D12xd2-M+316 | 1 |
| 4.11 | | > SCREW CHC-M6X14-8.8-ISO4762-GEOMET500A | 1 |
| 4.12 | | > WASHER D.24 L6U ZINK | 1 |
| 13 | | HYDRAULIC HELIX V 407 1.4307 | 1 |

| Item | Article no. | Description | Quantity |
|---|---|---|---|
| 14 | 4213750 | SHAFT D.12X306 HELIX 1.4057 VP. | 1 |
| 15 | 4174079 | PUMP HOUSING HELIX DN32 PN16 1.4301 KIT | 1 |
| 7.3 | 4176513 | > O-RING FOR PUMP JACKET VP. | 1 |
| 15.1 | | > BLASTING PPE HOUSING V-PN16-DN32-5"-304 | 1 |
| 15.2 | 4217889 | > COUNTER FLANGE-G1"-PN16-GJL KIT | 1 |
| 15.3 | 4171321 | > PRIMING/DRAIN PLUG EPDM HELIX KIT | 1 |
| 16 | 4177964 | BASEPLATE HELIX V2/4/6 PN16 VP. | 1 |

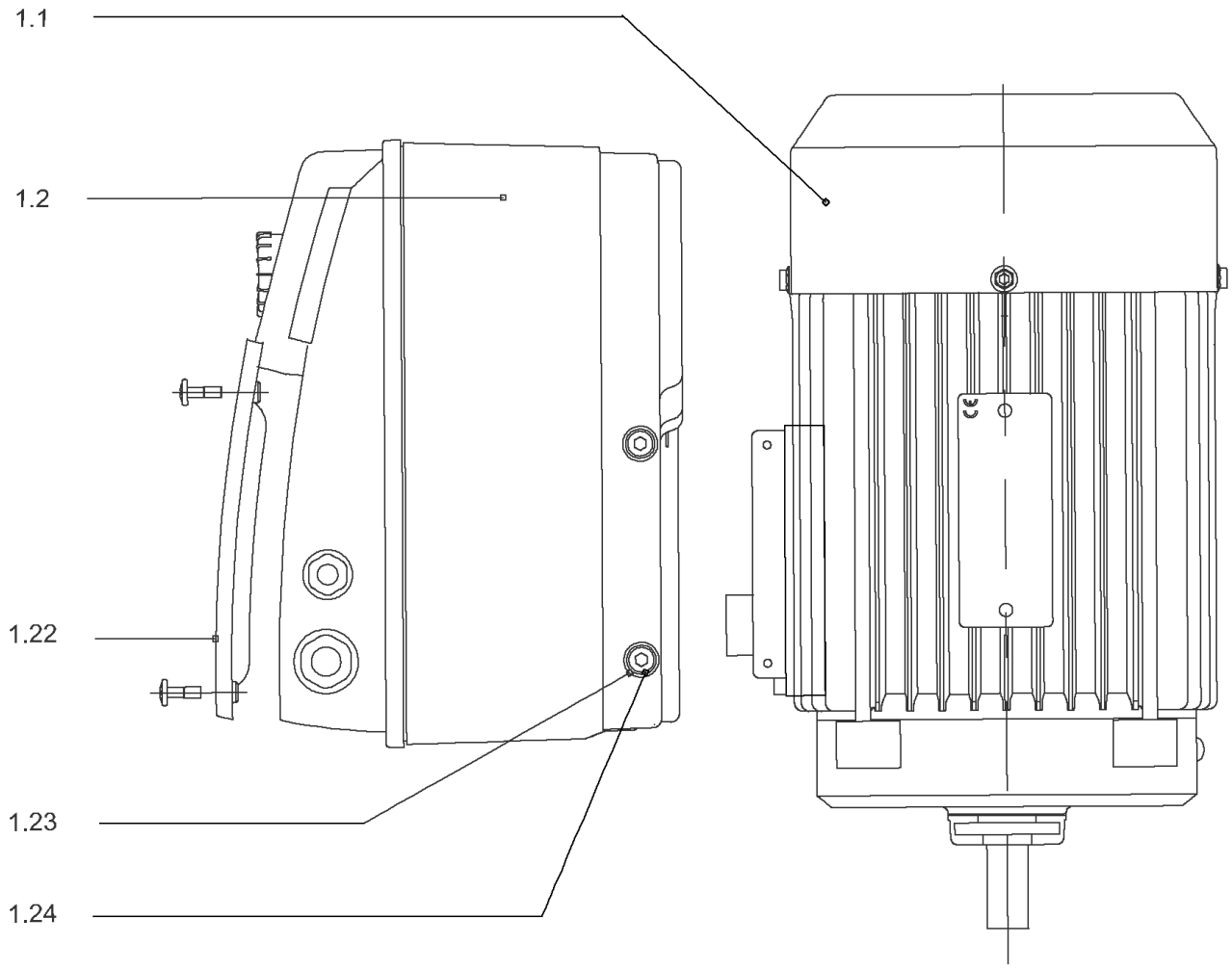
1.1
1.2
1.22
1.23
1.24

## DRIVE HELIX-VE407-IE4-WE KIT

| Item | Article no. | Description | Quantity |
|---|---|---|---|
| 1.1 | 4207918 | MOTOR 1.5/2/90 3~ 380V 60HZ IE4 WE VP. | 1 |
| | | SPARE PARTS MOTOR:ON REQUEST | 1 |
| 1.2 | 4209326 | MODULE HELIX-VE407-IE4-WE KIT | 1 |
| 1.22 | 2054227 | > MODULE COVER/GASKET TL3/4 KIT | 1 |
| 1.23 | 4215716 | > SCREW M5X16 DIN912 8.8 A2A (4pieces) VP. | 1 |
| 1.24 | 2057978 | > RONDELLE A5,3 DIN6797 FST ZN (4 PIECES) | 1 |

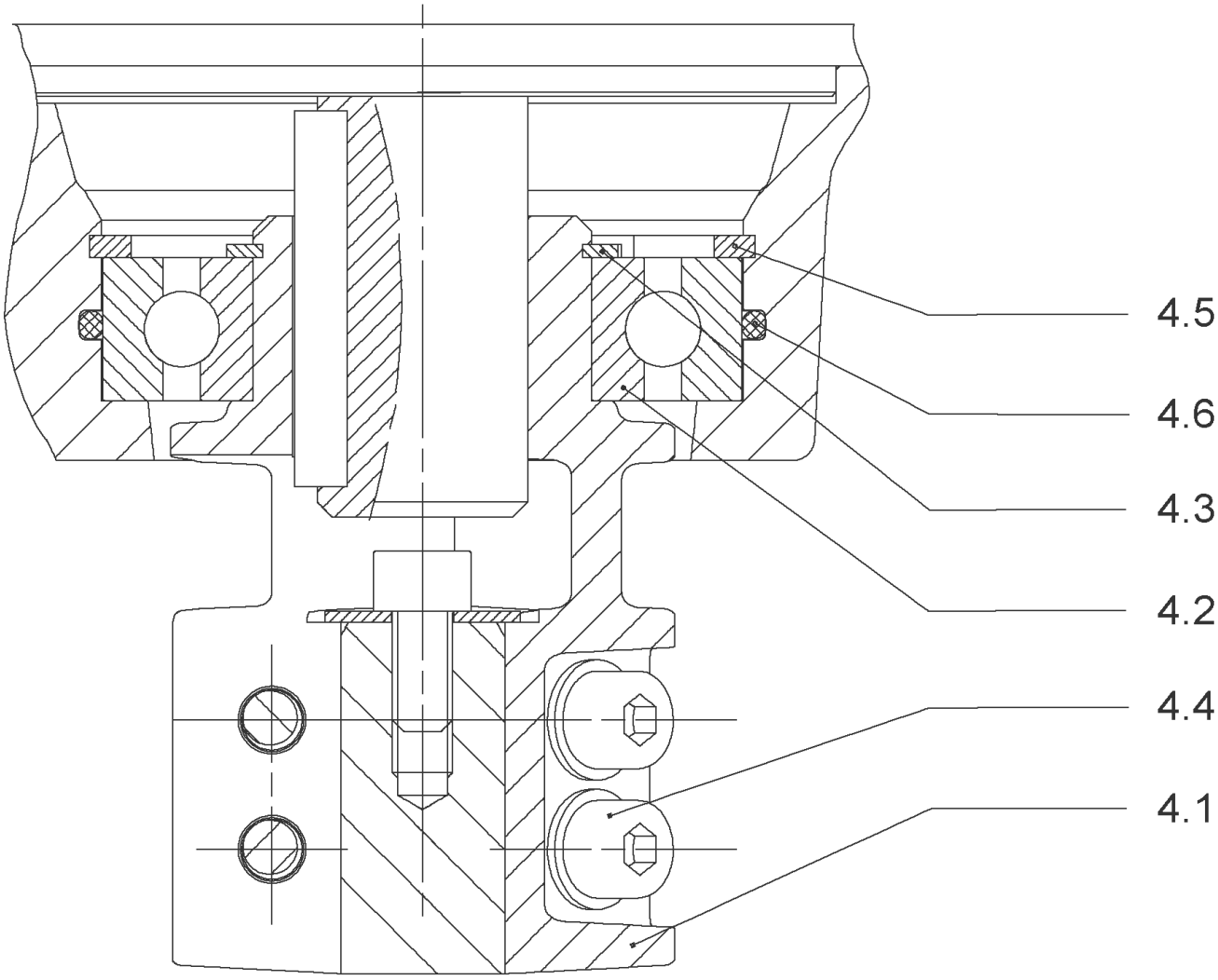
4.5
4.6
4.3
4.2
4.4
4.1

## COUPLING D.12XD.24 FT115 KIT (4178600)

| Item | Article no. | Description | Quantity |
|---|---|---|---|
| 4.1 | | COUPLING-M+ Ø12XØ24-FT115-MACHINED | 1 |
| 4.2 | 2131023 | BALL BEARING 6207/ZZ-C3(HT)VP. | 1 |
| 4.3 | 4234254 | CIRCLIP-FOR-SHAFT-D35x1.5 VP. | 1 |
| 4.4 | 4157726 | SCREW KIT M8X30 (4 PIECES) | 1 |
| 4.5 | 4234251 | CIRCLIP-D72x2.5 VP. | 1 |
| 4.6 | 4234246 | O-RING 72X3 VP. | 1 |
| | | NOMEL CONTACT WASHER 8x16x1,4 STEEL ZC | 1 |

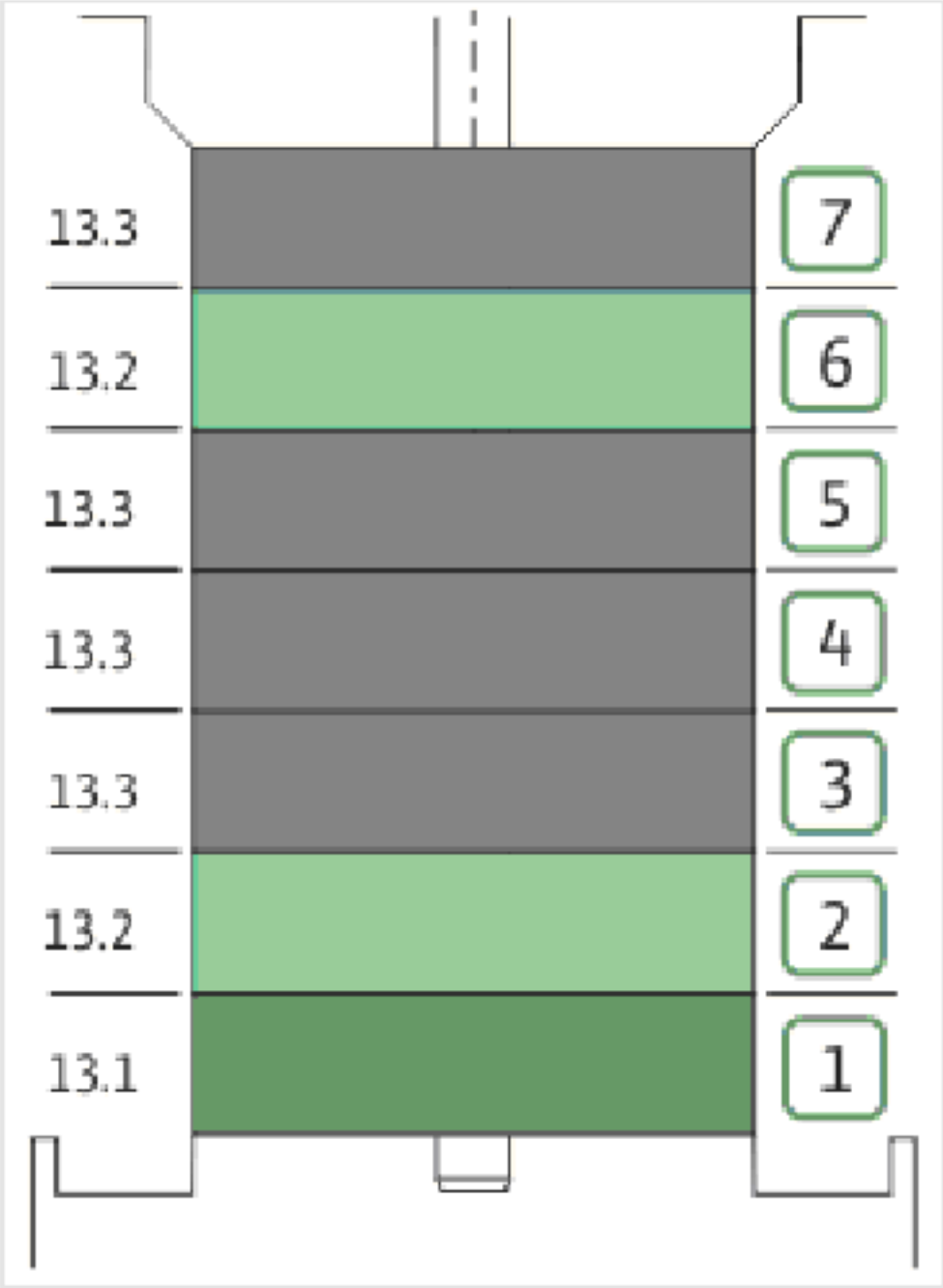
13.3
13.2
13.3
13.3
13.3
13.2
13.1
7
6
5
4
3
2
1

| Item | Article no. | Description | Quantity |
|---|---|---|---|
| 13.1 | 4178570 | STAGE HELIX 4 1.4301 KIT | 1 |
| | | > MACH.STG-CASING-WOGV-WNR-M+2-4-304 | 1 |
| | | > IMPELLER-M+4-304 | 1 |
| 13.2 | 4178569 | STAGE BEARING HELIX 4 1.4301 KIT | 1 |
| | | > MACH.BEARING-STG-CASING-WNR-M+4-304 | 1 |
| | | > IMPELLER-M+4-304 | 1 |
| | | > SHAFT SLEEVE SPACER Ø15,35x10,305-304 | 1 |
| | | > SHAFT-SLEEVE-D12xD16x14-CW | 1 |
| 13.3 | 4178574 | INTER STAGE HELIX4 1.4301< 15 stages KIT | 1 |
| | | > MACH.STD-STG-CASING-WGV+NR-M+4-304 | 1 |
| | | > IMPELLER-M+4-304 | 1 |
| | | > IMPELLER SPACER Ø12,05X14,85-L24,285-304 | 1 |

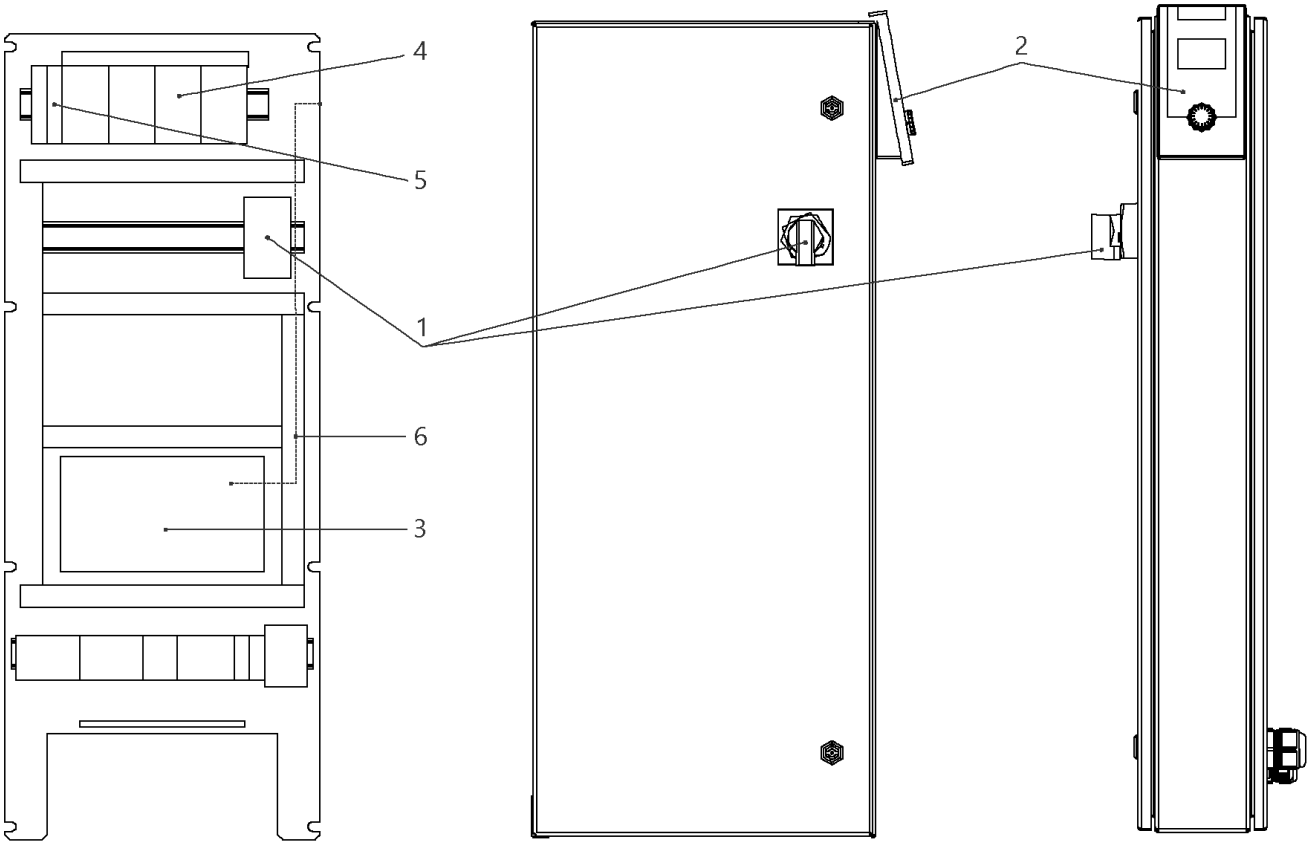
4
5
1
6
3
2

## W-CTRL-SCE-B-4x0,55-1,5KW-T4-FM-ND1

| Item | Article no. | Description | Quantity |
|---|---|---|---|
| 1 | 2104470 | MAIN SWITCH OT40F3 L250 KIT | 1 |
| 2 | 4184784 | CONTROL PANEL HMI SC KIT | 1 |
| 2 | 4185259 | ASSEMBLY DISPLAY SC PKG VP. | 1 |
| 3 | 4185257 | ASSEMBLY CPU SCe Booster VP. | 1 |
| 4 | 2051217 | AUTOM.CIRCUIT BREAKER S203 B16 TO7,5kW | 1 |
| 5 | 2046288 | CIRCUIT BREAKER S201 B16 | 1 |
| 6 | 4197081 | CABLE RJ45 CAT6 0,5M RED SC-PANEL VP. | 1 |

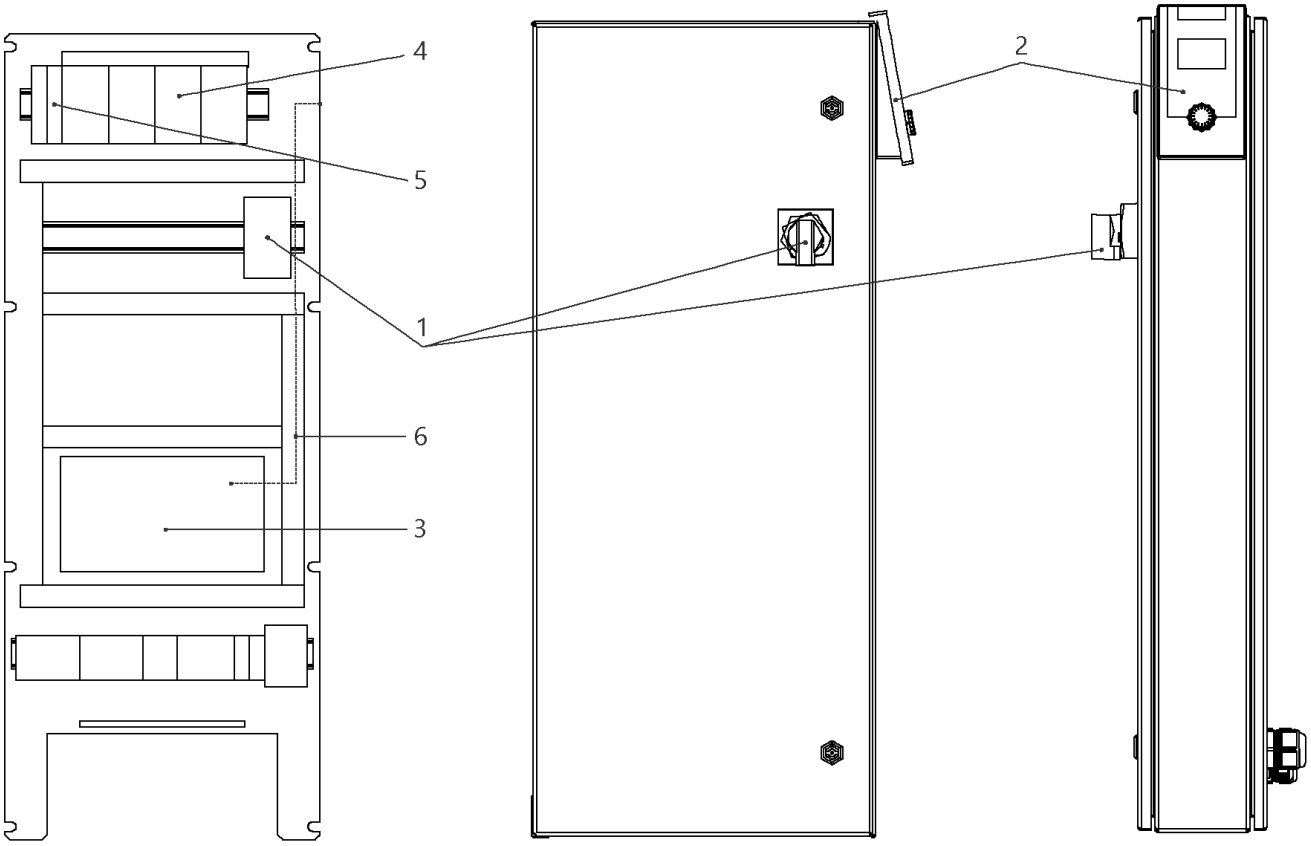
4
5
1
6
3
2

## W-CTRL-SCE-B-4x10A-T34-FM-ND1-AVC-PKG (2541915)

| Item | Article no. | Description | Quantity |
|---|---|---|---|
| 1 | 2104473 | MAIN SWITCH OT63F3 L105 KIT | 1 |
| 2 | 4184784 | CONTROL PANEL HMI SC KIT | 1 |
| 2 | 4185259 | ASSEMBLY DISPLAY SC PKG VP. | 1 |
| Note: DISPLAY ALONE / PLATINE SEULE | | | |
| 3 | 4185257 | ASSEMBLY CPU SCe Booster VP. | 1 |
| 5 | 2046288 | CIRCUIT BREAKER S201 B16 | 1 |
| 4 | 2119861 | AUTOMATIC CIRCUIT BREAKER S203 B13 3POL. | 1 |
| 6 | 4197081 | CABLE RJ45 CAT6 0,5M RED SC-PANEL VP. | 1 |

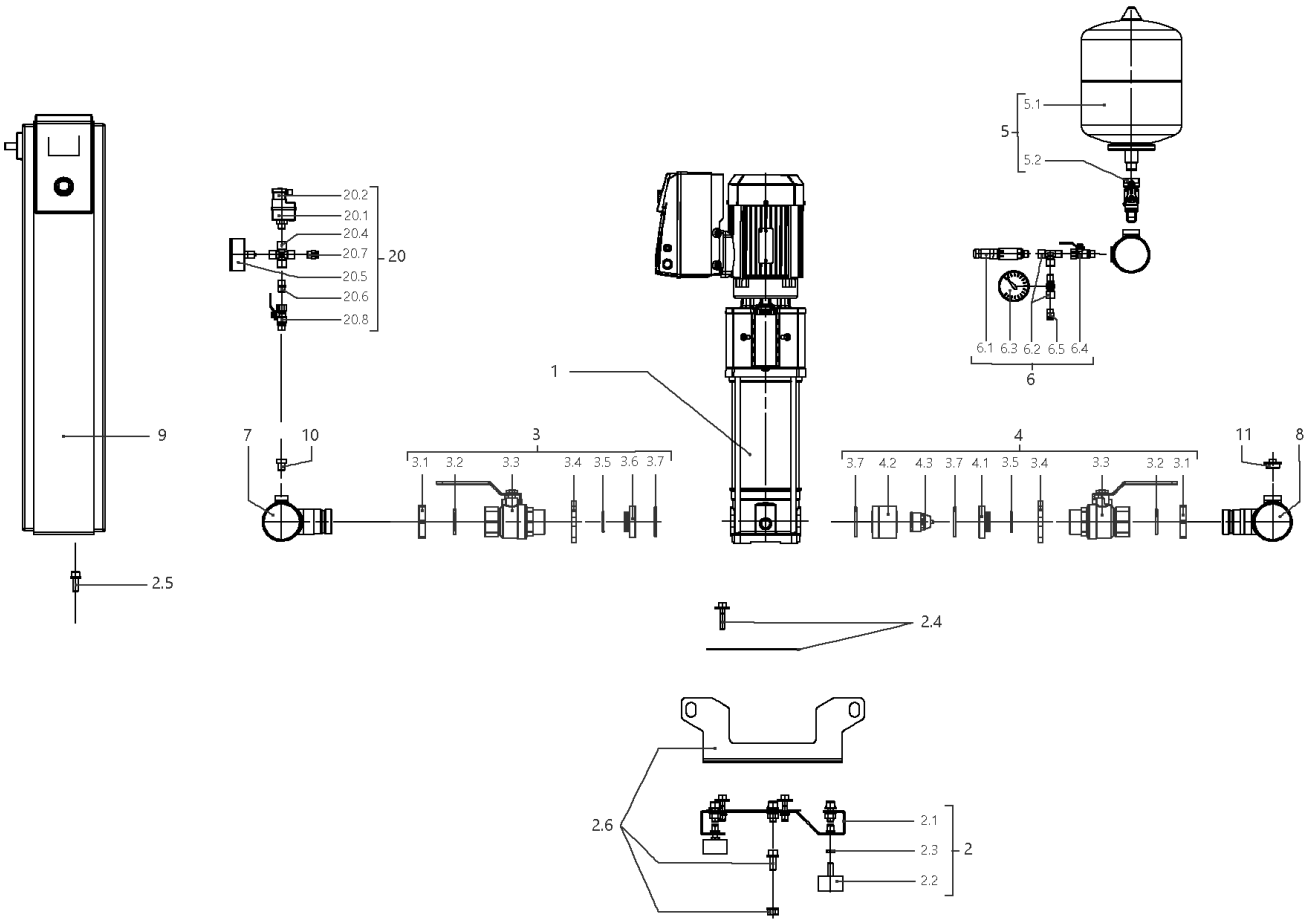
5.1
5
5.2
20.2
20.1
20.4
20.7
20
20.5
20.6
20.8
6.1 6.3 6.2 6.5 6.4
6
1
9
7
10
3
3.1 3.2 3.3 3.4 3.5 3.6 3.7
4
3.7 4.2 4.3 3.7 4.1 3.5 3.4 3.3 3.2 3.1
11
8
2.5
2.4
2.6
2.1
2.3
2
2.2

| Item | Article no. | Description | Quantity |
|---|---|---|---|
| 1 | | HELIX VE410-1/16/E/S | 1 |
| Note: TO / BIS / JUSQU'AU 31/03/2016 | | | |
| 1 | 4201575 | HELIX VE410-1/16/E/S | 1 |
| Note: FROM / AB / À PARTIR DU 01/04/2016 | | | |
| 2 | 4200146 | BASE PLATE DE4 1450x420 KIT | 1 |
| Note: TO / BIS / JUSQU'AU 28/02/2013 | | | |
| 2.1 | | > BASEPLATE_4x4/6/10/16V_E300_BOX_150 | 1 |
| 2.2 | 2028654 | > VIBRATION DAMPER D.50X30 M10X28 | 1 |
| 2.3 | 2028281 | > NUT M10 DIN936 (ISO4035) 17H VZ | 1 |
| 2.4 | 4199875 | > HOLDER PUMP Siboost Helix V2/4 KIT | 1 |
| 2.5 | 4197084 | > HOLDER SWITCHBOX WILO Smart Control KIT | 1 |
| 2.6 | 4197117 | > LIFTING Siboost HELIX SC KIT | 1 |
| 2 | 4200143 | BASE PLATE DE4 1450x300 KIT | 1 |
| Note: FROM / AB / À PARTIR DU 01/03/2013 | | | |
| 2.1 | | > BASEPLATE_4x4/6/10V_E300_1450x300BOX_150 | 1 |
| 2.2 | 2028654 | > VIBRATION DAMPER D.50X30 M10X28 | 1 |
| 2.3 | 2028281 | > NUT M10 DIN936 (ISO4035) 17H VZ | 1 |
| 2.4 | 4199875 | > HOLDER PUMP Siboost Helix V2/4 KIT | 1 |
| 2.5 | 4197084 | > HOLDER SWITCHBOX WILO Smart Control KIT | 1 |
| 2.6 | 4197085 | > LIFTING Siboost HELIX SC KIT | 1 |
| 3 | 4199876 | SUCTION SIDE Siboost Helix V2/4/6 KIT | 1 |
| 3.1 | 2032610 | > NUT G11/4 MS VP. | 1 |
| 3.2 | 2032611 | > O-RING ID.36,09X3,53N DIN3771 E7502 | 1 |
| 3.3 | 2507646 | > BALL VALVE G11/4"M-F-W.HANDLE 1/4-TURN | 1 |
| 3.4 | 2032613 | > SCREWED FLANGE G1 1/4" LK-75 ST37VZ | 1 |
| 3.5 | 2032614 | > O-RING ID.29,82X2,62N DIN3771 E7502 | 1 |
| 3.6 | 2032615 | > SPACER F.I/A KUH.DN32 CUZN | 1 |
| 3.7 | 2032616 | > O-RING ID.44X3,53N DIN3771 E7502 | 1 |
| 4 | 4199877 | DELIVERY SIDE Siboost Helix V2/4/6 KIT | 1 |
| 3.1 | 2032610 | > NUT G11/4 MS VP. | 1 |
| 3.2 | 2032611 | > O-RING ID.36,09X3,53N DIN3771 E7502 | 1 |
| 3.3 | 2507646 | > BALL VALVE G11/4"M-F-W.HANDLE 1/4-TURN | 1 |
| 3.4 | 2032613 | > SCREWED FLANGE G1 1/4" LK-75 ST37VZ | 1 |
| 3.5 | 2032614 | > O-RING ID.29,82X2,62N DIN3771 E7502 | 1 |

| Item | Article no. | Description | Quantity |
|---|---|---|---|
| 4.1 | 2058116 | > SPACER F.I/A KUH.DN32 CUZN | 1 |
| 3.7 | 2032616 | > O-RING ID.44X3,53N DIN3771 E7502 | 1 |
| 4.2 | 2058115 | > HOUSING RFV(RV-IN) DN32 SGS/DRS | 1 |
| 4.3 | 2027870 | > NON-RETURN-DEVICE INSERT DN32(MTR) | 1 |
| 5 | 2032642 | DIAPHREM TANK 8L/PN16 DIN4807/T5 KIT | 1 |
| 5.1 | 2045914 | > DIAPHREM TANK 8L TYP-DD 16BAR | 1 |
| 5.2 | 2027853 | > FLOW FITTING G3/4 FOR DIAPHRAGM VES. | 1 |
| 6 | 4197076 | PRESSURE SENSOR/ GAUGE 0-16BAR KIT | 1 |
| 6.1 | 2085909 | > PRESS.SENSOR 1/4" 0-16BAR 4-20MA VP. | 1 |
| 6.2 | 4197077 | > T-PIECE 1/4" VP. | 1 |
| 6.3 | 2028692 | > PRESSURE GAUGE NG63-PN16-G1/4 | 1 |
| 6.4 | 2028291 | > BALL TAP R1/4" PN42 GIACOMINI R254DL | 1 |
| 6.5 | 2028691 | > BLOWGUN 1/4" MS 30BAR VP. | 1 |
| 7 | 4200144 | PIPE DE4 21/2''-4x11/4"+2x1/4x900 VP. | 1 |
| 8 | 4200145 | PIPE DE4 21/2''-4x11/4"+2x1/4+1x3/4x900 | 1 |
| 9 | | W-CTRL-SCE-B-4x2,2KW-T4-FM-ND2 | 1 |
| Note: TO / BIS / JUSQU'AU 28/02/2013 | | | |
| 9 | | W-CTRL-SCE-B-4x2,2-3,0KW-T4-FM-ND1 | 1 |
| Note: FROM / AB / À PARTIR DU 01/03/2013 - TO / BIS / JUSQU'AU 18/05/2014 | | | |
| 9 | 2541915 | W-CTRL-SCE-B-4x10A-T34-FM-ND1-AVC-PKG | 1 |
| Note: FROM / AB / À PARTIR DU 19/05/2014 | | | |
| 10 | 4197079 | PLUG G1/4"x10 AISI304 KIT | 1 |
| 11 | 2032654 | PLUG R3/4" MS VIEGA 1751 | 1 |
| 20 | | ASSEMBLY WMS. DE-EB. +VP | 1 |
| 20.1 | 2028652 | > PRESSURE SWITCH PS3-ASR 1/(1,3) VP. | 1 |
| 20.2 | 2130983 | > PLUG PS3-415 WITH KABEL 1,5M 2NO VP. | 1 |
| 20.4 | 2028290 | > CROSSPIECE R1/4" MS-NICKEL | 1 |
| 20.5 | 2028687 | > PRESSURE GAUGE NG63 R1/4" HI.0-6BAR | 1 |
| 20.6 | 2054268 | > DUAL NIPPLE G1/4" x G1/4" MS VP. | 1 |
| 20.7 | 2028691 | > BLOWGUN 1/4" MS 30BAR VP. | 1 |
| 20.8 | 2028291 | > BALL TAP R1/4" PN42 GIACOMINI R254DL | 1 |

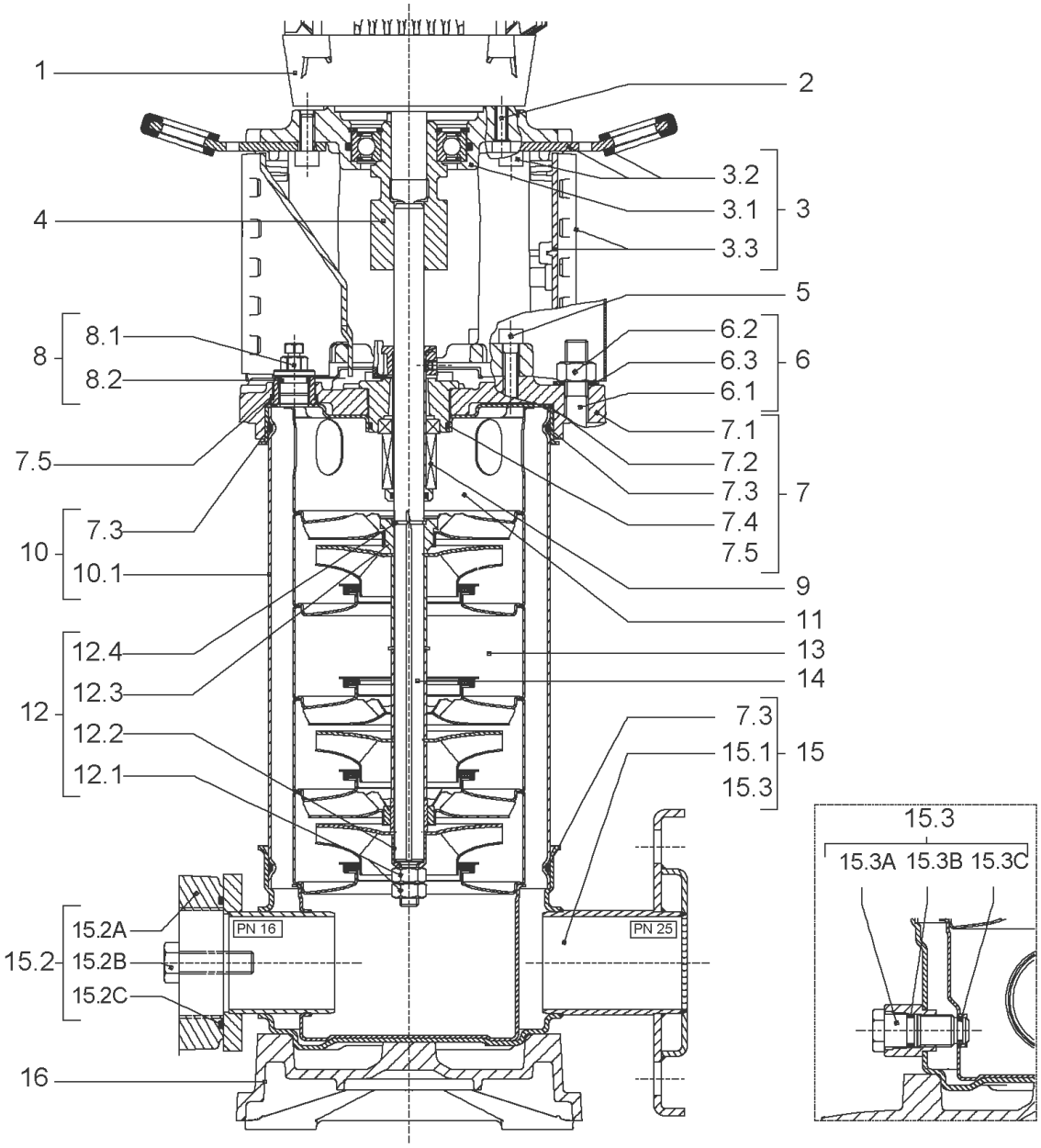
1
2
3.2
3.1
3
3.3
4
5
8.1
8
8.2
6.2
6.3
6
6.1
7.1
7.5
7.2
7.3
7
7.4
7.3
10
7.5
10.1
9
11
12.4
13
12.3
14
12
12.2
7.3
15.1
15
12.1
15.3
15.3
15.3A 15.3B 15.3C
15.2A
PN 16
PN 25
15.2
15.2B
15.2C
16

| Item | Article no. | Description | Quantity |
|---|---|---|---|
| 1 | | DRIVE HELIX-VE410-IE2-WE KIT | 1 |
| Note: MOTOR BRAND WILO ELEC | | | |
| 1 | | DRIVE HELIX-VE410-IE4-WE KIT | 1 |
| Note: MOTOR BRAND WILO ELEC | | | |
| 2 | 4159703 | SCREW M8X40 (4 PIECES) | 1 |
| 3 | 4172795 | LANTERNE FT115 HELIX KIT | 1 |
| 3.1 | | > M+5_6_LANTERN_ONE-PIECE_FT115_CATA | 1 |
| 3.2 | 2127604 | > EYELET CPL.FT HELIX(2 PIECES) | 1 |
| 3.3 | 4159692 | > COUPLING PROTECTOR FT HELIX KIT | 1 |
| 4 | 4178600 | COUPLING D.12XD.24 FT115 KIT | 1 |
| 5 | 4159707 | SCREW M8X30 (4 PIECES) | 1 |
| 6 | 2127554 | STUD BOLT M12X437 KIT | 1 |
| 7 | 4210143 | STATIONARY RING HOLDER HELIX 6" EPDM | 1 |
| 7.2 | 2127607 | > STATIONARY RING HOLDER 6" HELIX 1.4301 V | 1 |
| 7.3 | 4176513 | > O-RING FOR PUMP JACKET VP. | 1 |
| 7.4 | 2127603 | > O-RING ID.37,6x2,4 EPDM VP. | 1 |
| 7.5 | 2127602 | > O-RING ID.21,35x2 EPDM VP. | 1 |
| 8 | 4159686 | FILING/PURGING PLUG HELIX EPDM KIT | 1 |
| 9 | 4178564 | SEAL-KIT-HELIX2-4 O/E KIT | 1 |
| 10 | 2127577 | HOUSING PIPE D.152x310 1.4301 KIT | 1 |
| 11 | 4178566 | CENTERING STAGE-RETURN HELIX4 1.4307 VP | 1 |
| 12 | 4178568 | SHAFT EQUIPMENT HELIX V2/V4 KIT | 1 |
| 12.1 | | > NUT-H-M8-STAINLESS-STEEL A4-70 | 2 |
| 12.2 | | > SHAFT END WASHER Ø8/Ø12 316L | 1 |
| 12.3 | | > STOP COLLAR OF IMPELLER M+2/4 SINGLEBLOC | 1 |
| 12.4 | | > STOP-RUSH-1/2-D12xd2-M+316 | 2 |
| 13 | | HYDRAULIC HELIX V 410 1.4307 | 1 |
| 14 | 4178604 | SHAFT D.12X433 1.4301 VP. | 1 |
| 15 | 4174079 | PUMP HOUSING HELIX DN32 PN16 1.4301 KIT | 1 |
| 7.3 | 4176513 | > O-RING FOR PUMP JACKET VP. | 1 |
| 15.1 | | > BLASTING PPE HOUSING V-PN16-DN32-5"-304 | 1 |
| 15.2 | 4217889 | > COUNTER FLANGE-G1"-PN16-GJL KIT | 1 |
| 15.3 | 4171321 | > PRIMING/DRAIN PLUG EPDM HELIX KIT | 1 |
| 16 | 4177964 | BASEPLATE HELIX V2/4/6 PN16 VP. | 1 |

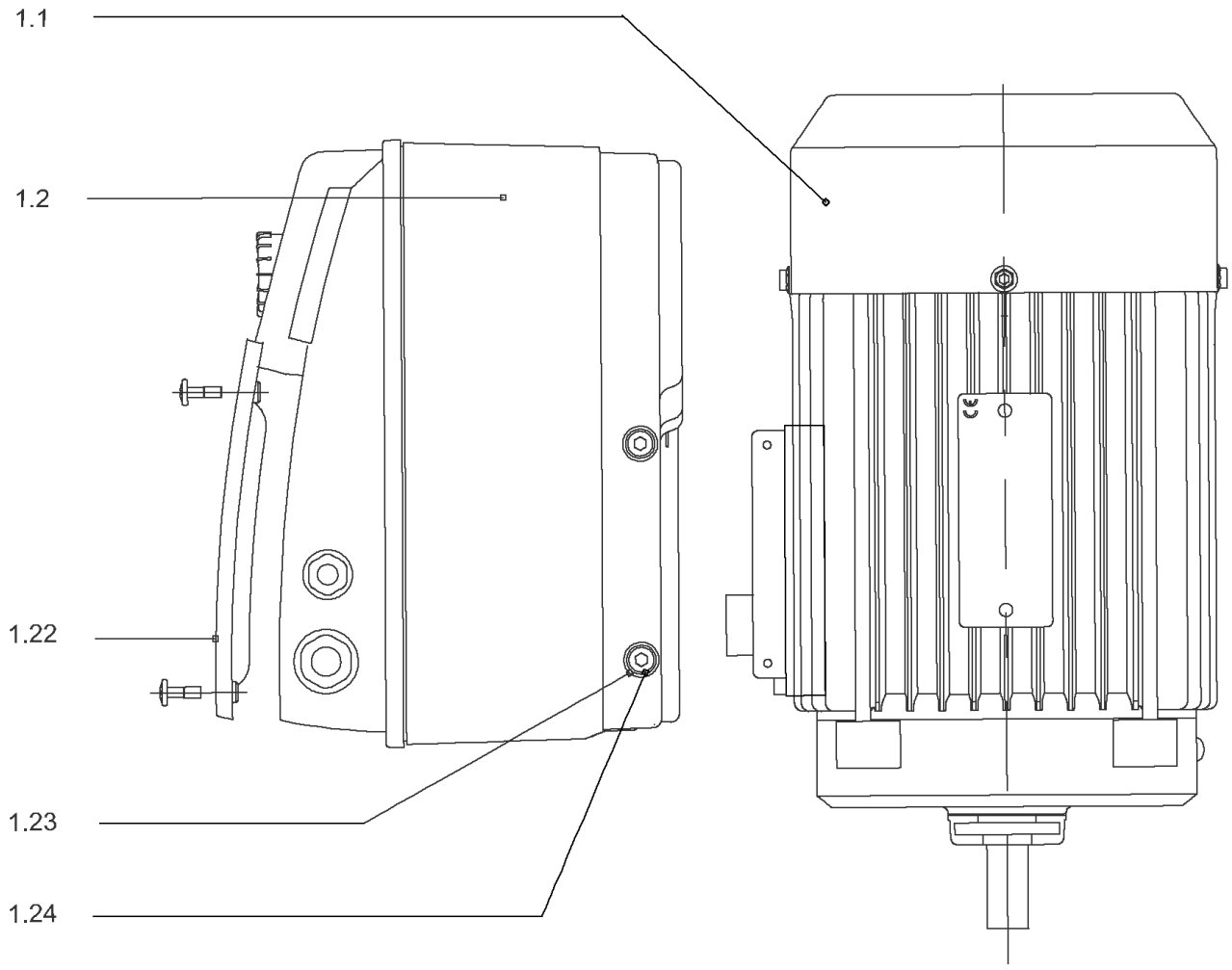
1.1
1.2
1.22
1.23
1.24

## DRIVE HELIX-VE410-IE2-WE KIT

| Item | Article no. | Description | Quantity |
|---|---|---|---|
| 1.1 | 4185016 | MOTOR 2,2/2/90 3~ 380V 60HZ IE2 WE VP. | 1 |
| | | SPARE PARTS MOTOR:ON REQUEST | 1 |
| 1.2 | 4186768 | MODULE HELIX-VE410-IE2-WE KIT | 1 |
| 1.22 | 2054227 | > MODULE COVER/GASKET TL3/4 KIT | 1 |
| 1.23 | 4215716 | > SCREW M5X16 DIN912 8.8 A2A (4pieces) VP. | 1 |
| 1.24 | 2057978 | > RONDELLE A5,3 DIN6797 FST ZN (4 PIECES) | 1 |

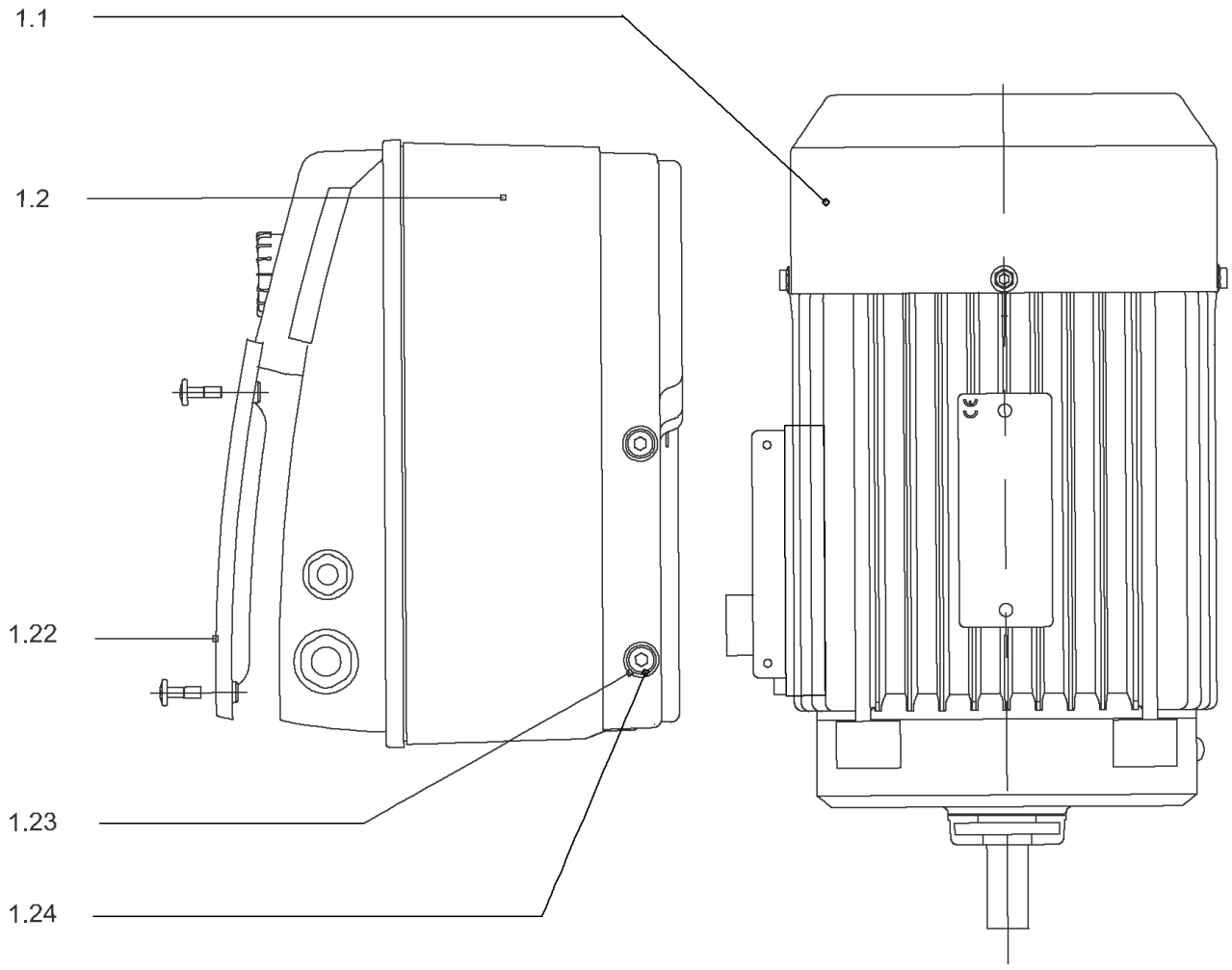
1.1
1.2
1.22
1.23
1.24

## DRIVE HELIX-VE410-IE4-WE KIT

| Item | Article no. | Description | Quantity |
|---|---|---|---|
| 1.1 | 4207920 | MOTOR 2.2/2/90 3~ 380V 60HZ IE4 WE VP. | 1 |
| | | SPARE PARTS MOTOR:ON REQUEST | 1 |
| 1.2 | 4209591 | MODULE HELIX-VE410-IE4-WE KIT | 1 |
| 1.22 | 2054227 | > MODULE COVER/GASKET TL3/4 KIT | 1 |
| 1.23 | 4215716 | > SCREW M5X16 DIN912 8.8 A2A (4pieces) VP. | 1 |
| 1.24 | 2057978 | > RONDELLE A5,3 DIN6797 FST ZN (4 PIECES) | 1 |

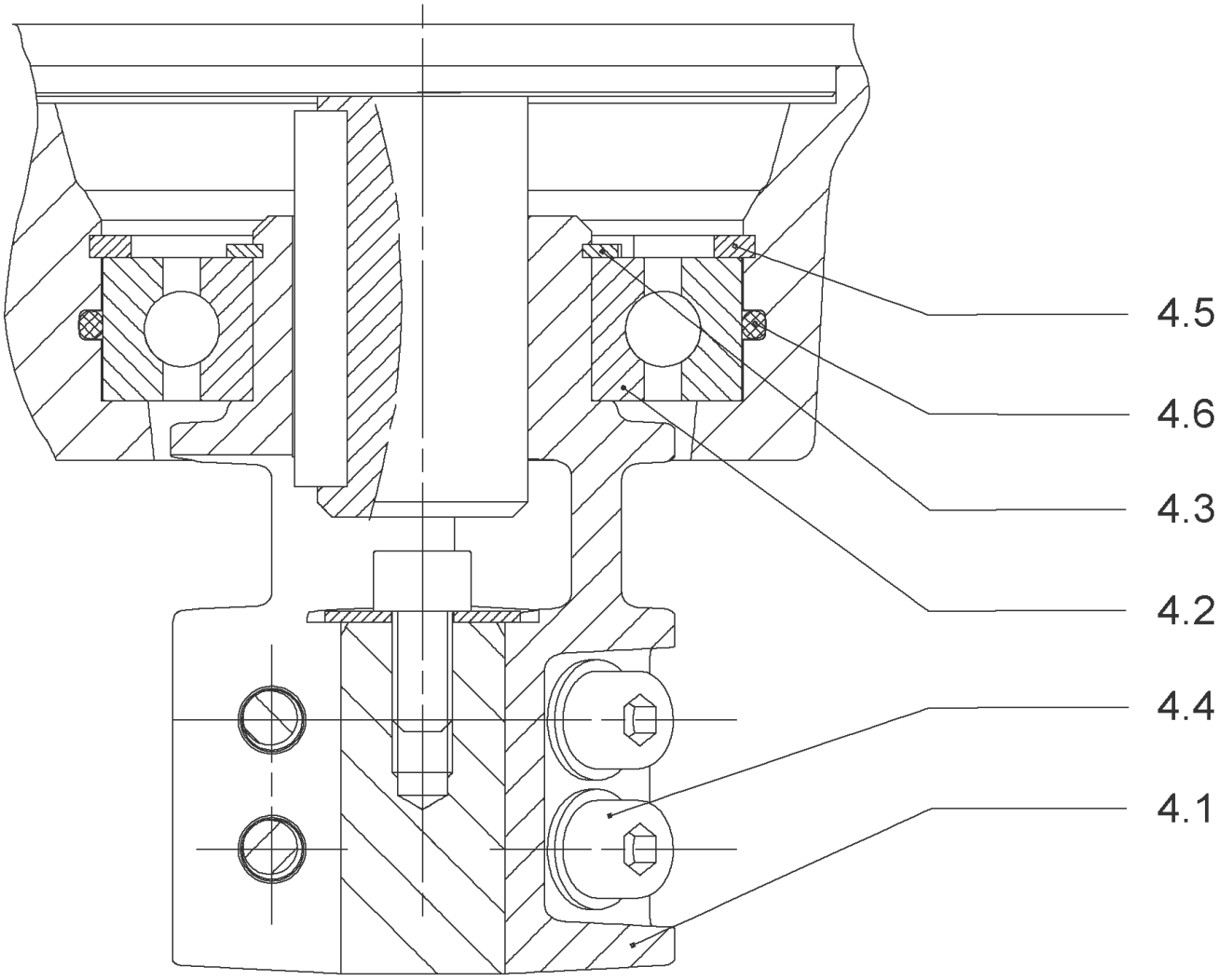
4.5
4.6
4.3
4.2
4.4
4.1

## COUPLING D.12XD.24 FT115 KIT (4178600)

| Item | Article no. | Description | Quantity |
|---|---|---|---|
| 4.1 | | COUPLING-M+ Ø12XØ24-FT115-MACHINED | 1 |
| 4.2 | 2131023 | BALL BEARING 6207/ZZ-C3(HT)VP. | 1 |
| 4.3 | 4234254 | CIRCLIP-FOR-SHAFT-D35x1.5 VP. | 1 |
| 4.4 | 4157726 | SCREW KIT M8X30 (4 PIECES) | 1 |
| 4.5 | 4234251 | CIRCLIP-D72x2.5 VP. | 1 |
| 4.6 | 4234246 | O-RING 72X3 VP. | 1 |
| | | NOMEL CONTACT WASHER 8x16x1,4 STEEL ZC | 1 |

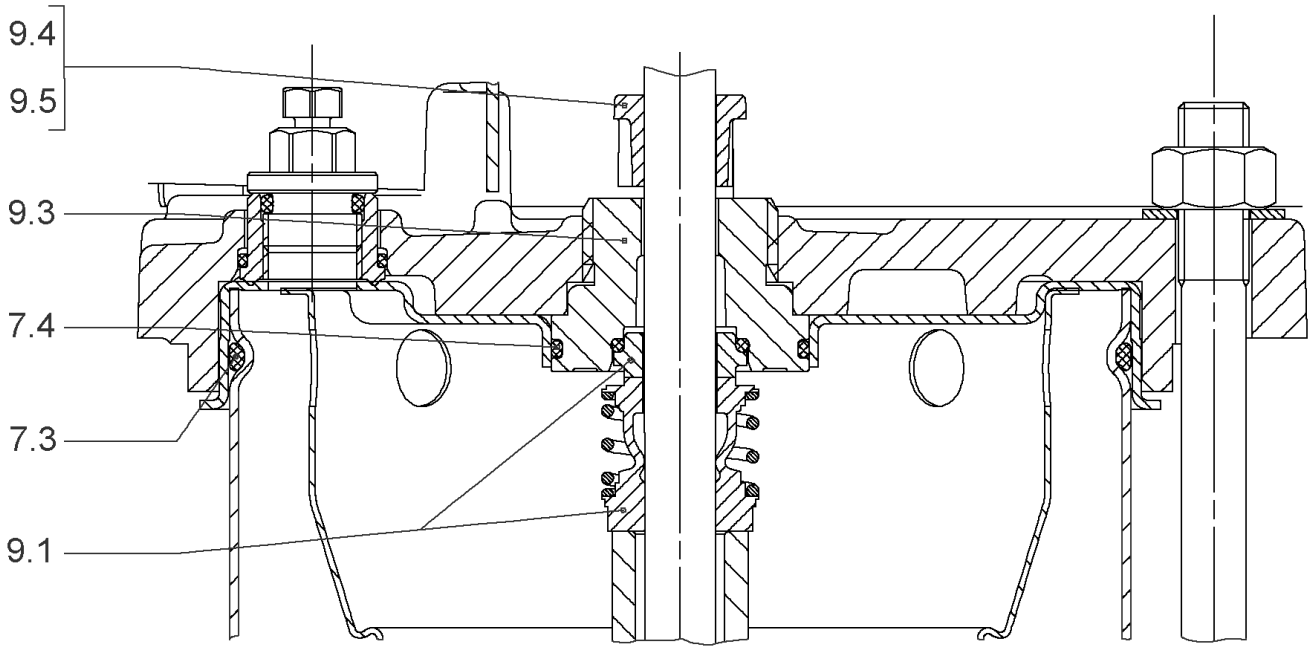
9.4
9.5
9.3
7.4
7.3
9.1

## SEAL-KIT-HELIX2-4 O/E KIT (4178564)

| Item | Article no. | Description | Quantity |
|---|---|---|---|
| 7.3 | 4176513 | O-RING FOR PUMP JACKET VP. | 1 |
| 7.4 | 2127603 | O-RING ID.37,6x2,4 EPDM VP. | 1 |
| 9.1 | 4178563 | M.SEAL.HELIX2-4 O/E VP. | 1 |
| 9.3 | 4178561 | RING HOLDER Ø22 1.4301 VP. | 1 |
| 9.5 | 4178562 | DRIVE RING D.22/12.2X10 MACH.VP. | 1 |
| 9.4 | 4176520 | SCREW CH M5x5 A4-70 ( 3PIECES ) | 1 |

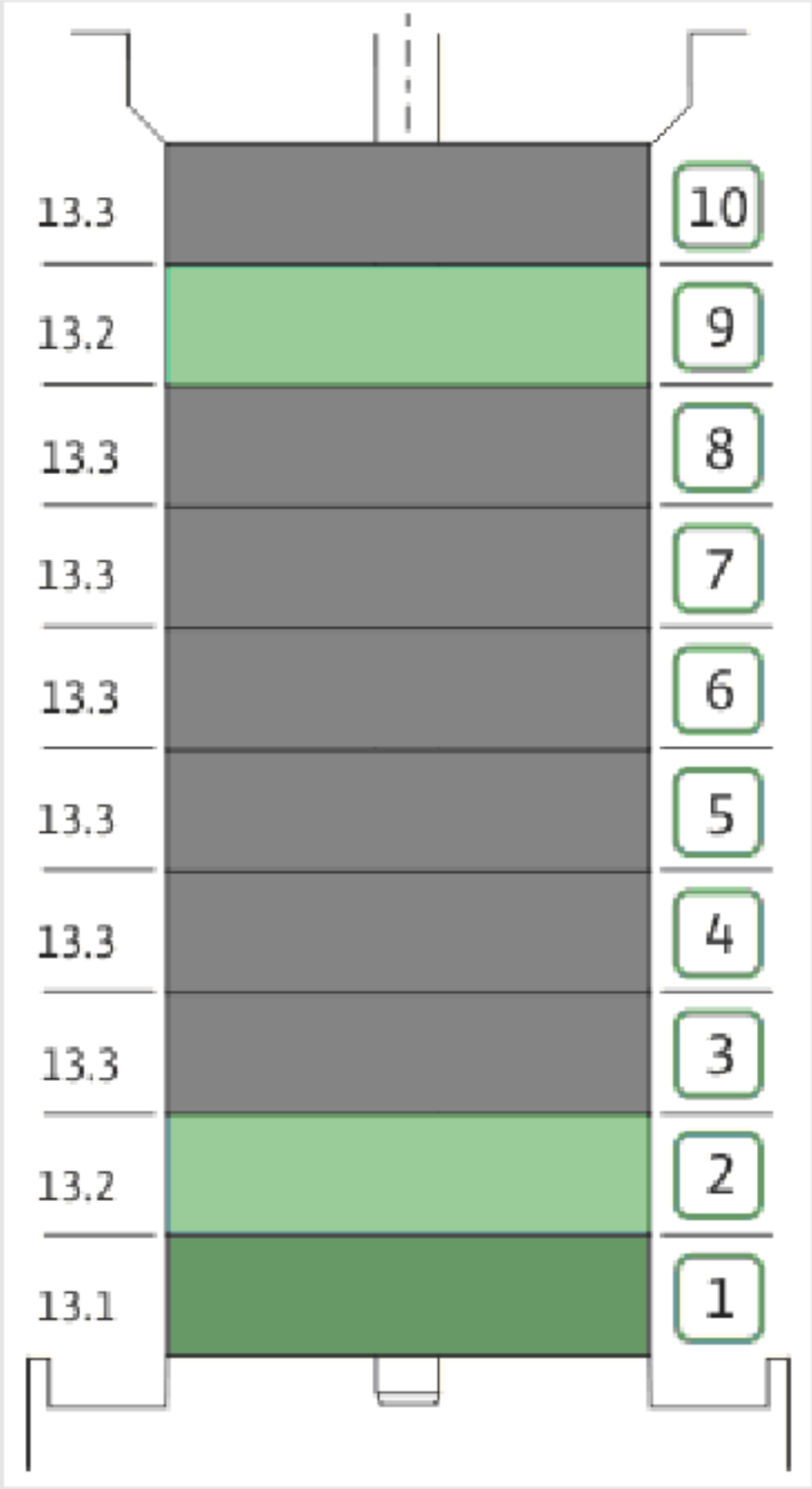
13.3
13.2
13.3
13.3
13.3
13.3
13.3
13.3
13.2
13.1
10
9
8
7
6
5
4
3
2
1

| Item | Article no. | Description | Quantity |
|---|---|---|---|
| 13.1 | 4178570 | STAGE HELIX 4 1.4301 KIT | 1 |
| | | > MACH.STG-CASING-WOGV-WNR-M+2-4-304 | 1 |
| | | > IMPELLER-M+4-304 | 1 |
| 13.2 | 4178569 | STAGE BEARING HELIX 4 1.4301 KIT | 1 |
| | | > MACH.BEARING-STG-CASING-WNR-M+4-304 | 1 |
| | | > IMPELLER-M+4-304 | 1 |
| | | > SHAFT SLEEVE SPACER Ø15,35x10,305-304 | 1 |
| | | > SHAFT-SLEEVE-D12xD16x14-CW | 1 |
| 13.3 | 4178574 | INTER STAGE HELIX4 1.4301< 15 stages KIT | 1 |
| | | > MACH.STD-STG-CASING-WGV+NR-M+4-304 | 1 |
| | | > IMPELLER-M+4-304 | 1 |
| | | > IMPELLER SPACER Ø12,05X14,85-L24,285-304 | 1 |

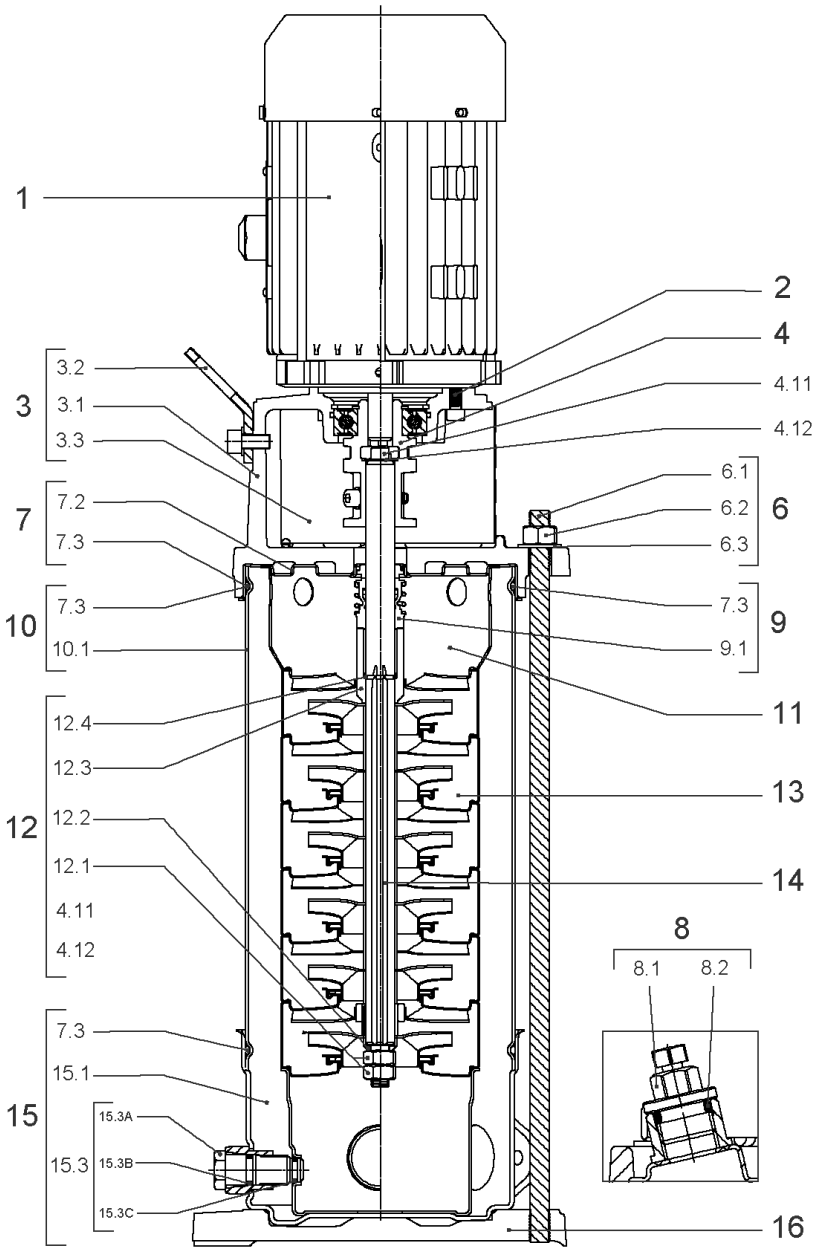
1
2
4
4.11
4.12
3
3.2
3.1
3.3
7
7.2
7.3
6
6.1
6.2
6.3
10
7.3
10.1
9
7.3
9.1
11
12
12.4
12.3
12.2
12.1
4.11
4.12
13
14
8
8.1
8.2
15
7.3
15.1
15.3
15.3A
15.3B
15.3C
16

## HELIX VE410-1/16/E/S (4201575)

| Item | Article no. | Description | Quantity |
|---|---|---|---|
| 1 | | DRIVE HELIX-VE410-IE4-WE KIT | 1 |
| Note: MOTOR BRAND WILO ELEC | | | |
| | | SPARE PARTS MOTOR:ON REQUEST | 1 |
| 2 | 4159707 | SCREW M8X30 (4 PIECES) | 1 |
| 3 | 4213784 | LANTERN FT115 HELIX KIT | 1 |
| 3.1 | | > LANT-MOT-VMI-ReDTC6"-FT115-MACHINED+CATA | 1 |
| 3.2 | 4184852 | > EYELET CPL.FT HELIX (2 PIECES) | 1 |
| 3.3 | 4213782 | > COUPLING PROTECTOR FT115/130 HELIX KIT | 1 |
| 4 | 4178600 | COUPLING D.12XD.24 FT115 KIT | 1 |
| 6 | 2127554 | STUD BOLT M12X437 KIT | 1 |
| 7 | 4212722 | STATIONARY RING HOLDER HELIX D23 ReDTC | 1 |
| 7.2 | 4212720 | > STATIONARY RING HOLDER HELIX D23 VP. | 1 |
| 7.3 | 4176513 | > O-RING FOR PUMP JACKET VP. | 1 |
| 8 | 4212724 | FILING/PURGING PLUG HELIX ReDTC KIT | 1 |
| 8.1 | | > FILLING PLUG MVI6"-304 | 1 |
| 8.2 | 4177800 | > O-RING EPDM PLUG HELIX VP. | 1 |
| 9 | 4212726 | MECH.SEAL HELIX V2/4 O/E ReDTC KIT | 1 |
| 9.1 | 4178563 | > M.SEAL.HELIX2-4 O/E VP. | 1 |
| 7.3 | 4176513 | > O-RING FOR PUMP JACKET VP. | 1 |
| 10 | 2127577 | HOUSING PIPE D.152x310 1.4301 KIT | 1 |
| 11 | 4178566 | CENTERING STAGE-RETURN HELIX4 1.4307 VP | 1 |
| 12 | 4212729 | SHAFT EQUIPMENT HELIX V2/4 ReDTC KIT | 1 |
| 12.1 | | > NUT-H-M8-STAINLESS-STEEL A4-70 | 1 |
| 12.2 | | > SHAFT END WASHER Ø8/Ø12 316L | 1 |
| 12.3 | | > 1/2-SNAP-RING-2/4M3-316L | 1 |
| 12.4 | | > STOP-RUSH-1/2-D12xd2-M+316 | 1 |
| 4.11 | | > SCREW CHC-M6X14-8.8-ISO4762-GEOMET500A | 1 |
| 4.12 | | > WASHER D.24 L6U ZINK | 1 |
| 13 | | HYDRAULIC HELIX V 410 1.4307 | 1 |
| 14 | 4213771 | SHAFT D.12X381 HELIX 1.4057 VP. | 1 |
| 15 | 4174079 | PUMP HOUSING HELIX DN32 PN16 1.4301 KIT | 1 |
| 7.3 | 4176513 | > O-RING FOR PUMP JACKET VP. | 1 |
| 15.1 | | > BLASTING PPE HOUSING V-PN16-DN32-5"-304 | 1 |
| 15.2 | 4217889 | > COUNTER FLANGE-G1"-PN16-GJL KIT | 1 |

| Item | Article no. | Description | Quantity |
|---|---|---|---|
| 15.3 | 4171321 | > PRIMING/DRAIN PLUG EPDM HELIX KIT | 1 |
| 16 | 4177964 | BASEPLATE HELIX V2/4/6 PN16 VP. | 1 |

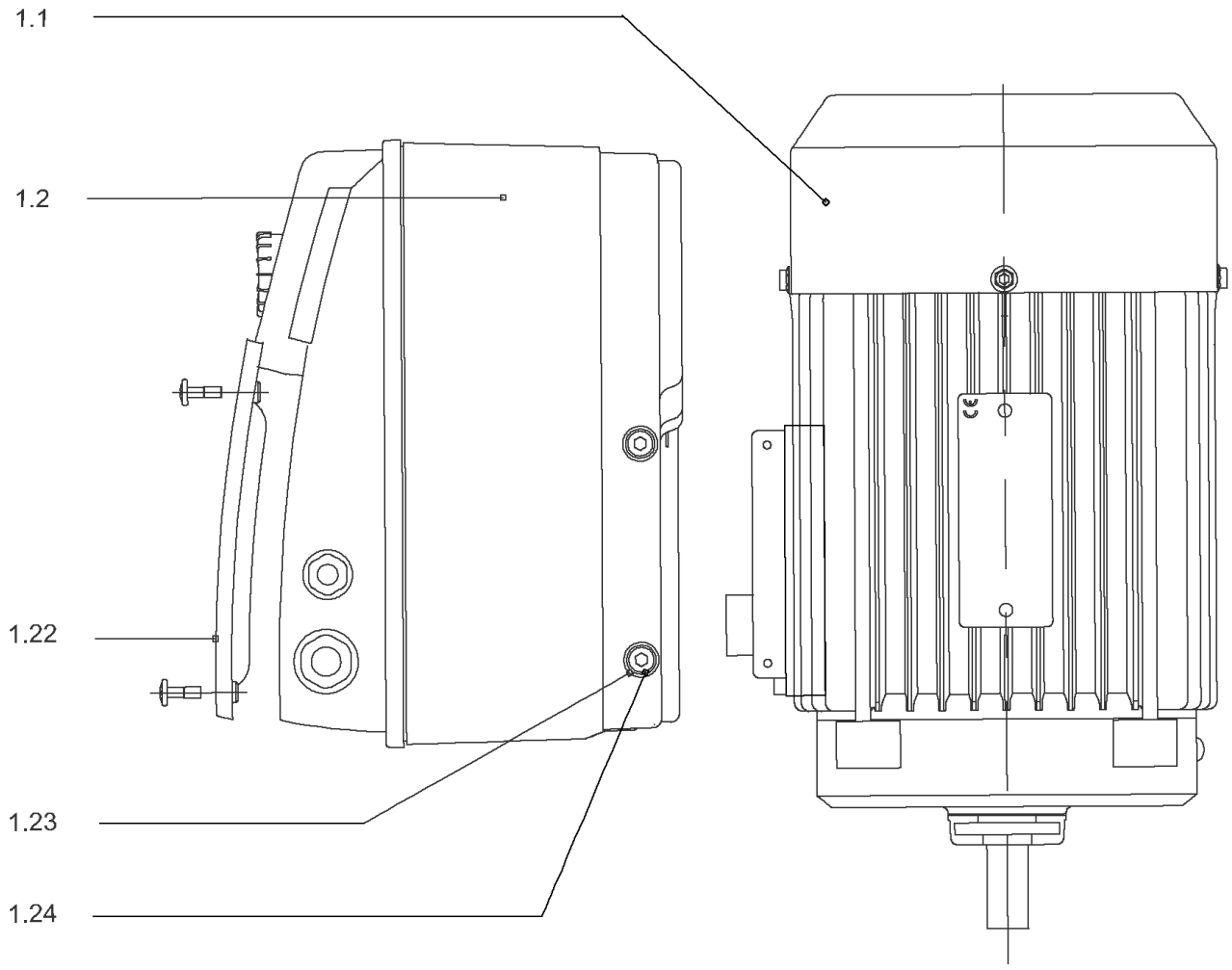
1.1
1.2
1.22
1.23
1.24

## DRIVE HELIX-VE410-IE4-WE KIT

| Item | Article no. | Description | Quantity |
|---|---|---|---|
| 1.1 | 4207920 | MOTOR 2.2/2/90 3~ 380V 60HZ IE4 WE VP. | 1 |
| | | SPARE PARTS MOTOR:ON REQUEST | 1 |
| 1.2 | 4209591 | MODULE HELIX-VE410-IE4-WE KIT | 1 |
| 1.22 | 2054227 | > MODULE COVER/GASKET TL3/4 KIT | 1 |
| 1.23 | 4215716 | > SCREW M5X16 DIN912 8.8 A2A (4pieces) VP. | 1 |
| 1.24 | 2057978 | > RONDELLE A5,3 DIN6797 FST ZN (4 PIECES) | 1 |

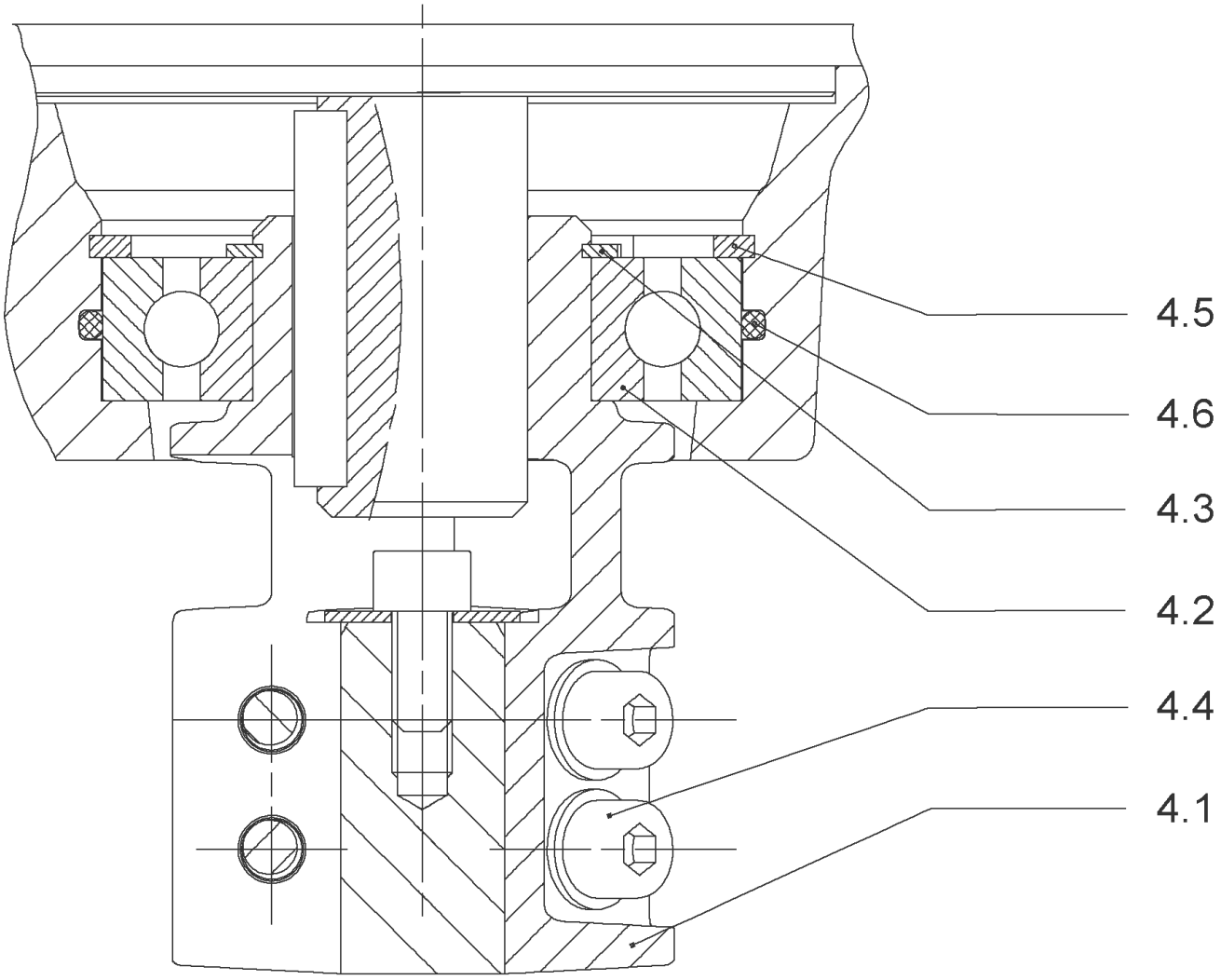
4.5
4.6
4.3
4.2
4.4
4.1

## COUPLING D.12XD.24 FT115 KIT (4178600)

| Item | Article no. | Description | Quantity |
|---|---|---|---|
| 4.1 | | COUPLING-M+ Ø12XØ24-FT115-MACHINED | 1 |
| 4.2 | 2131023 | BALL BEARING 6207/ZZ-C3(HT)VP. | 1 |
| 4.3 | 4234254 | CIRCLIP-FOR-SHAFT-D35x1.5 VP. | 1 |
| 4.4 | 4157726 | SCREW KIT M8X30 (4 PIECES) | 1 |
| 4.5 | 4234251 | CIRCLIP-D72x2.5 VP. | 1 |
| 4.6 | 4234246 | O-RING 72X3 VP. | 1 |
| | | NOMEL CONTACT WASHER 8x16x1,4 STEEL ZC | 1 |

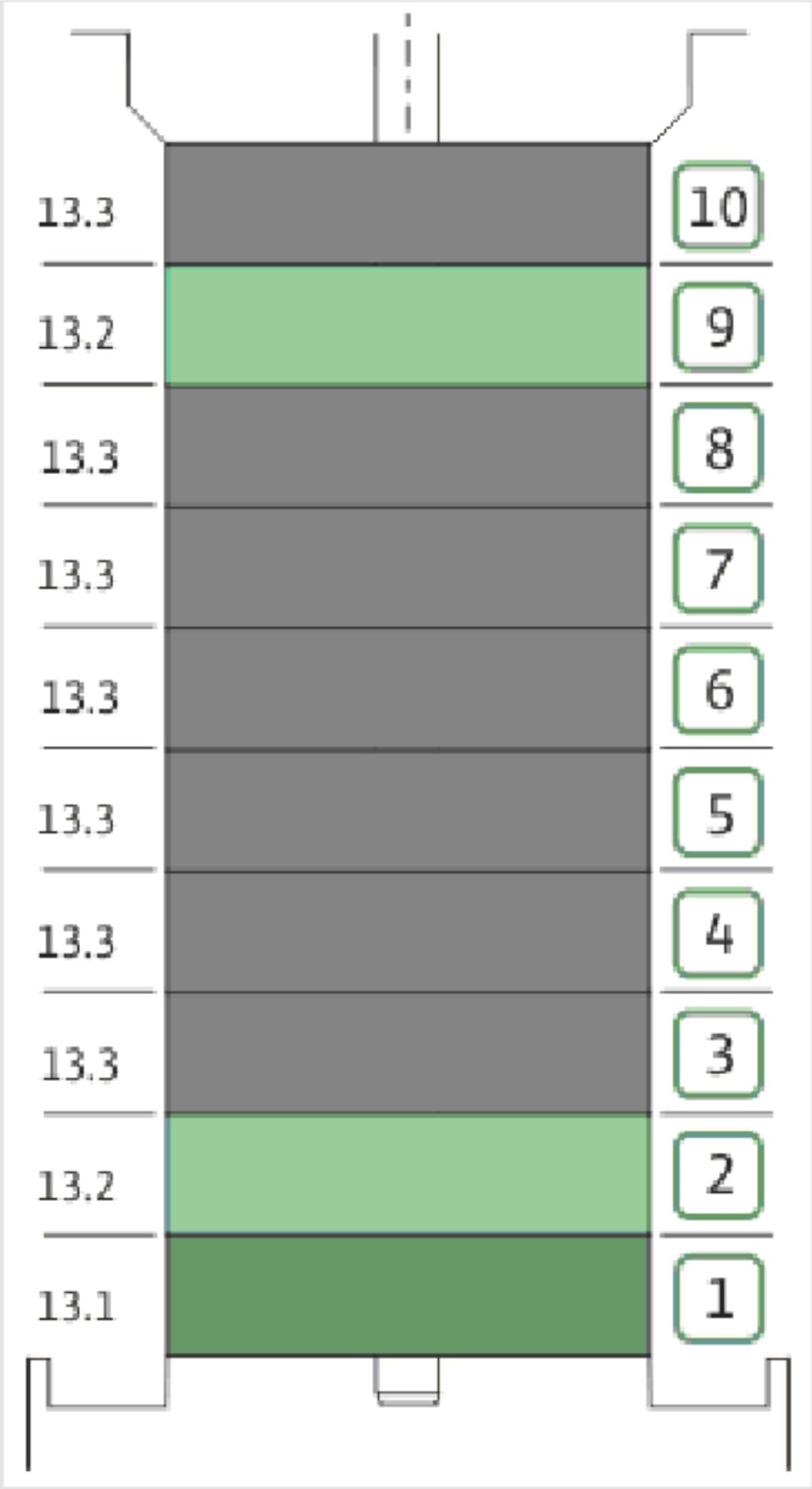
13.3
13.2
13.3
13.3
13.3
13.3
13.3
13.3
13.2
13.1
10
9
8
7
6
5
4
3
2
1

| Item | Article no. | Description | Quantity |
|---|---|---|---|
| 13.1 | 4178570 | STAGE HELIX 4 1.4301 KIT | 1 |
| | | > MACH.STG-CASING-WOGV-WNR-M+2-4-304 | 1 |
| | | > IMPELLER-M+4-304 | 1 |
| 13.2 | 4178569 | STAGE BEARING HELIX 4 1.4301 KIT | 1 |
| | | > MACH.BEARING-STG-CASING-WNR-M+4-304 | 1 |
| | | > IMPELLER-M+4-304 | 1 |
| | | > SHAFT SLEEVE SPACER Ø15,35x10,305-304 | 1 |
| | | > SHAFT-SLEEVE-D12xD16x14-CW | 1 |
| 13.3 | 4178574 | INTER STAGE HELIX4 1.4301< 15 stages KIT | 1 |
| | | > MACH.STD-STG-CASING-WGV+NR-M+4-304 | 1 |
| | | > IMPELLER-M+4-304 | 1 |
| | | > IMPELLER SPACER Ø12,05X14,85-L24,285-304 | 1 |

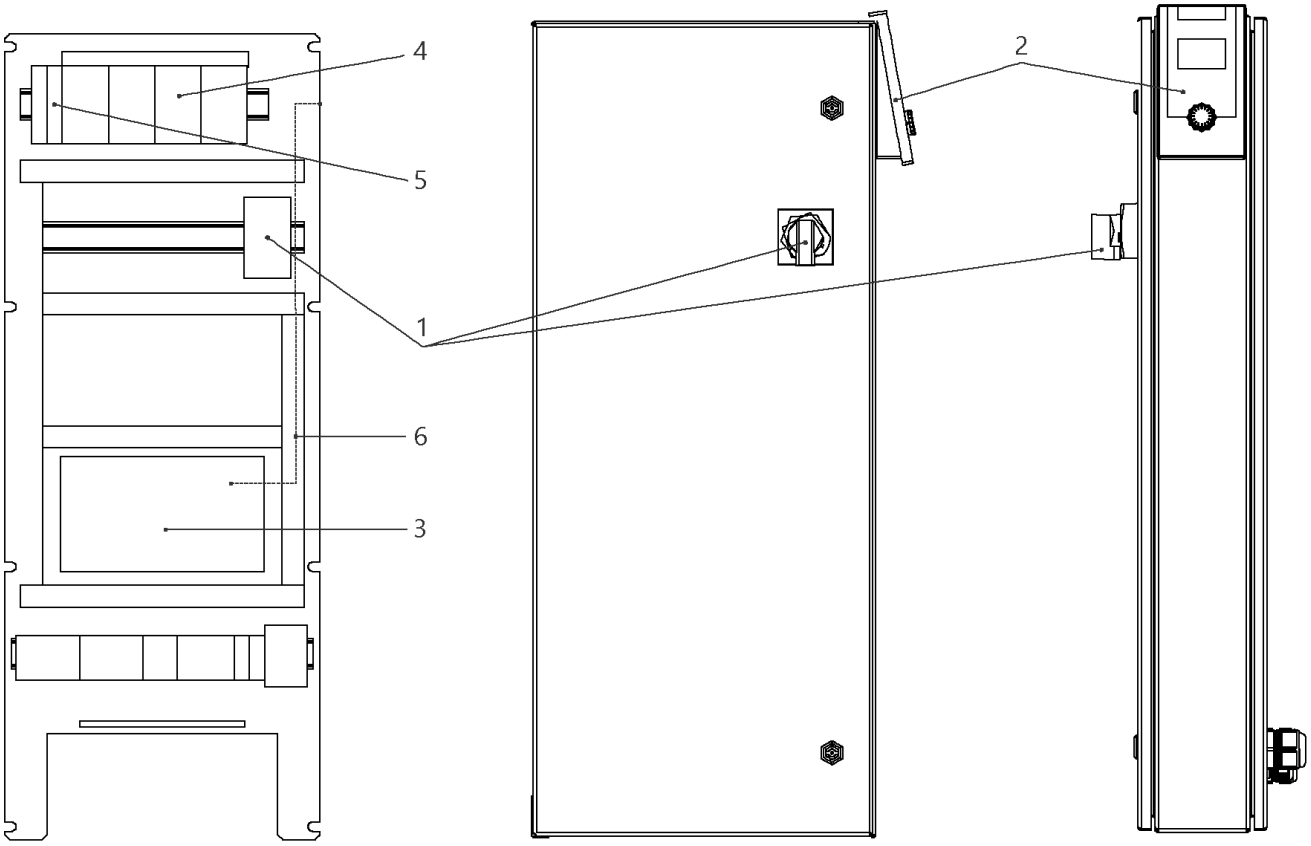
4
5
1
6
3
2

## W-CTRL-SCE-B-4x2,2KW-T4-FM-ND2

| Item | Article no. | Description | Quantity |
|---|---|---|---|
| 1 | 2104473 | MAIN SWITCH OT63F3 L105 KIT | 1 |
| 2 | 4184784 | CONTROL PANEL HMI SC KIT | 1 |
| 2 | 4185259 | ASSEMBLY DISPLAY SC PKG VP. | 1 |
| 3 | 4185257 | ASSEMBLY CPU SCe Booster VP. | 1 |
| 4 | 2051217 | AUTOM.CIRCUIT BREAKER S203 B16 TO7,5kW | 1 |
| 5 | 2046288 | CIRCUIT BREAKER S201 B16 | 1 |
| 6 | 4194956 | PATCH CABLE RJ45 CAT6 1,0M BLUE SC-PANEL | 1 |

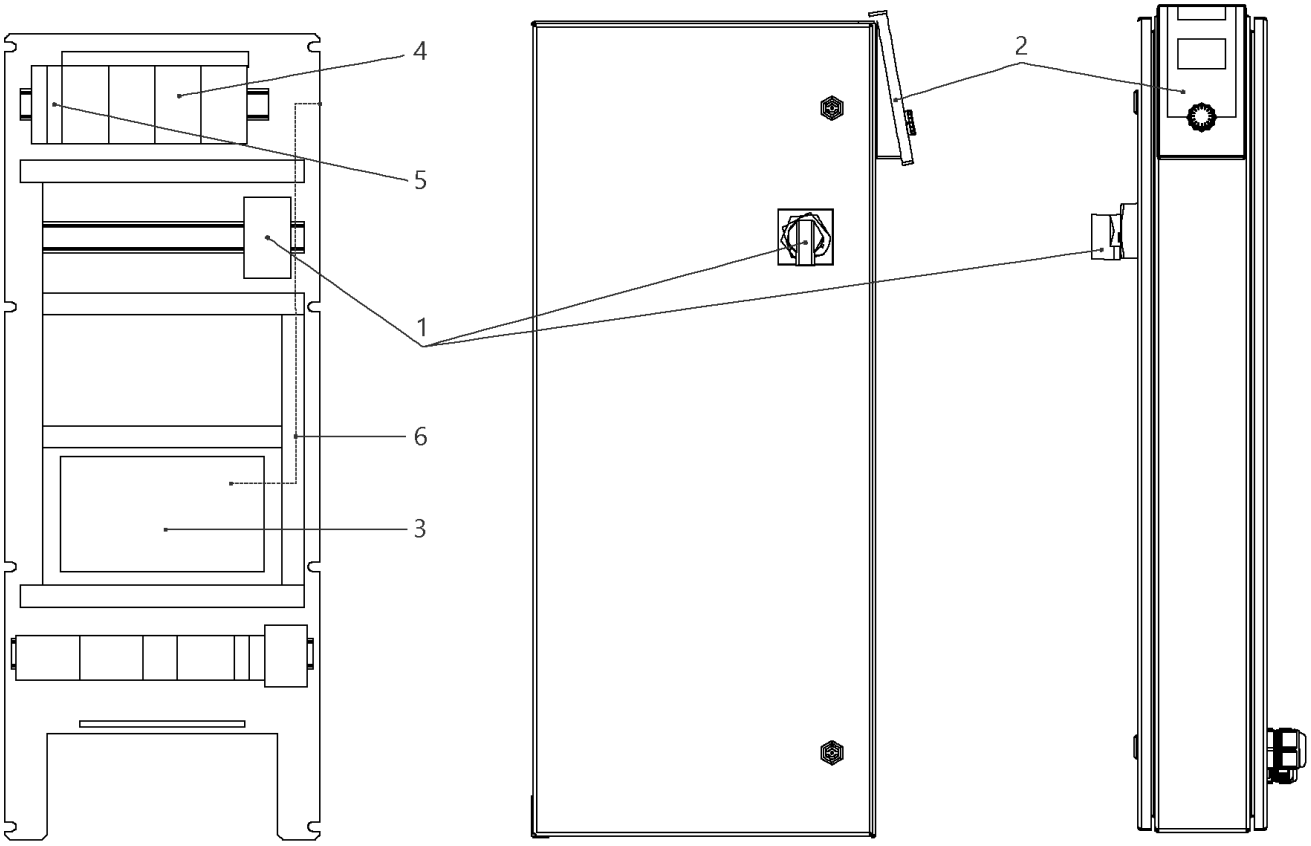
4
5
1
6
3
2

## W-CTRL-SCE-B-4x2,2-3,0KW-T4-FM-ND1

| Item | Article no. | Description | Quantity |
|---|---|---|---|
| 1 | 2104473 | MAIN SWITCH OT63F3 L105 KIT | 1 |
| 2 | 4184784 | CONTROL PANEL HMI SC KIT | 1 |
| 2 | 4185259 | ASSEMBLY DISPLAY SC PKG VP. | 1 |
| 3 | 4185257 | ASSEMBLY CPU SCe Booster VP. | 1 |
| 4 | 2051217 | AUTOM.CIRCUIT BREAKER S203 B16 TO7,5kW | 1 |
| 5 | 2046288 | CIRCUIT BREAKER S201 B16 | 1 |
| 6 | 4197081 | CABLE RJ45 CAT6 0,5M RED SC-PANEL VP. | 1 |

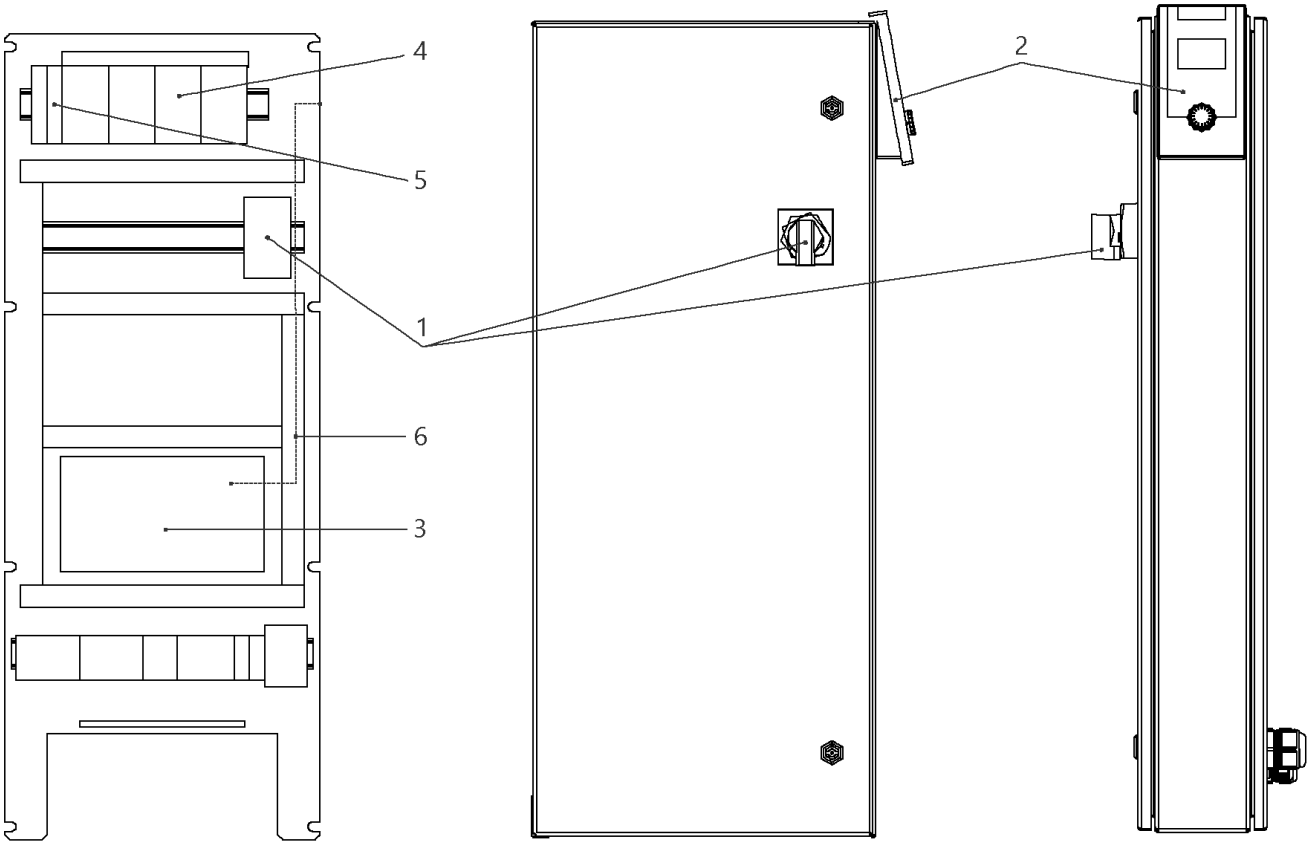
4
5
1
6
3
2

## W-CTRL-SCE-B-4x10A-T34-FM-ND1-AVC-PKG (2541915)

| Item | Article no. | Description | Quantity |
|---|---|---|---|
| 1 | 2104473 | MAIN SWITCH OT63F3 L105 KIT | 1 |
| 2 | 4184784 | CONTROL PANEL HMI SC KIT | 1 |
| 2 | 4185259 | ASSEMBLY DISPLAY SC PKG VP. | 1 |
| Note: DISPLAY ALONE / PLATINE SEULE | | | |
| 3 | 4185257 | ASSEMBLY CPU SCe Booster VP. | 1 |
| 5 | 2046288 | CIRCUIT BREAKER S201 B16 | 1 |
| 4 | 2119861 | AUTOMATIC CIRCUIT BREAKER S203 B13 3POL. | 1 |
| 6 | 4197081 | CABLE RJ45 CAT6 0,5M RED SC-PANEL VP. | 1 |

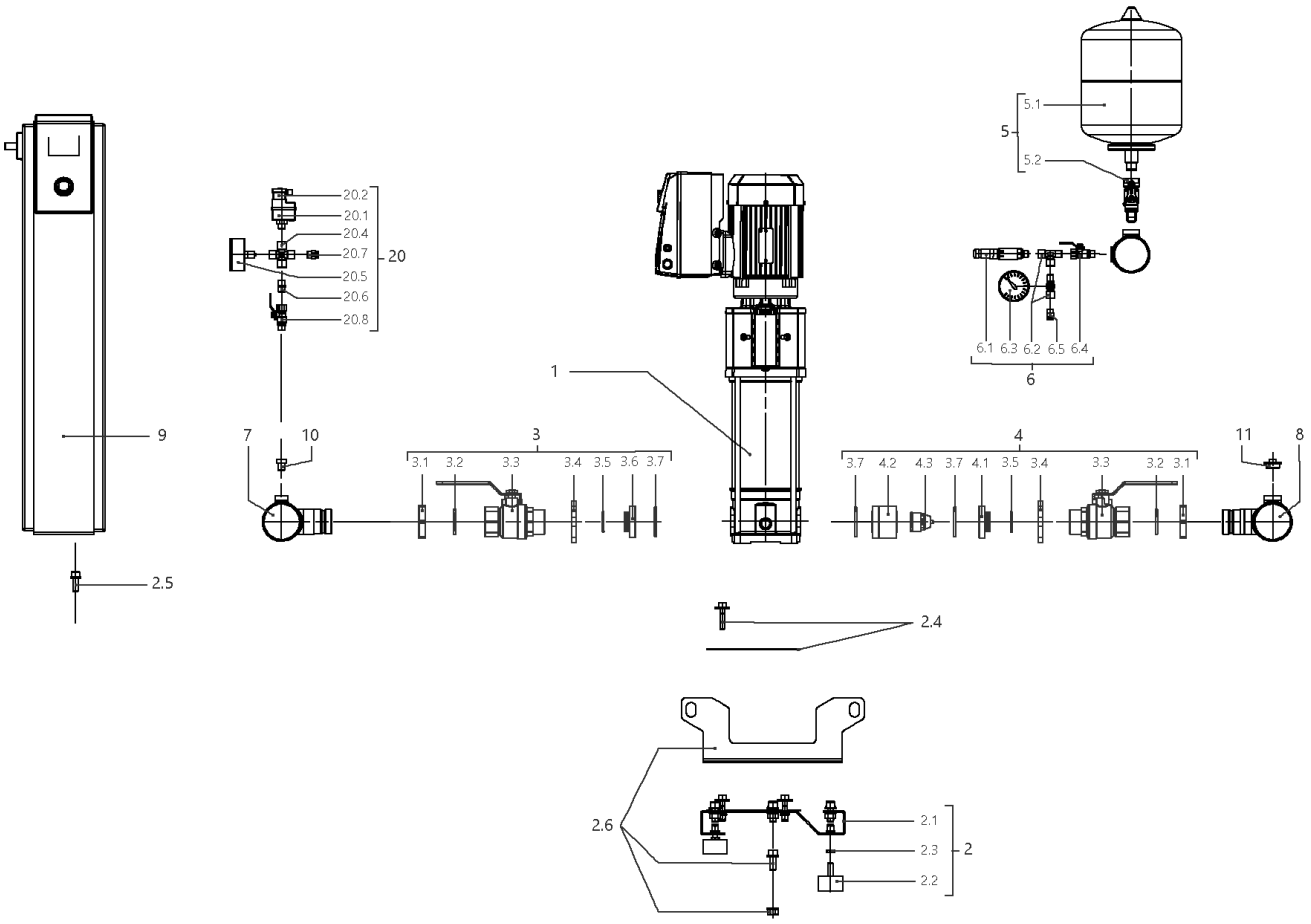
5.1
5
5.2
20.2
20.1
20.4
20.7
20
20.5
20.6
20.8
6.1 6.3 6.2 6.5 6.4
6
1
9
7
10
3
3.1 3.2 3.3 3.4 3.5 3.6 3.7
4
3.7 4.2 4.3 3.7 4.1 3.5 3.4 3.3 3.2 3.1
11
8
2.5
2.4
2.6
2.1
2.3
2
2.2

## SiBoost Smart 4HELIX VE602 (2537348)

| Item | Article no. | Description | Quantity |
|---|---|---|---|
| 1 | | HELIX VE602-1/16/E/S | 1 |
| Note: TO / BIS / JUSQU'AU 31/03/2016 | | | |
| 1 | 4201577 | HELIX VE602-1/16/E/S | 1 |
| Note: FROM / AB / À PARTIR DU 01/04/2016 | | | |
| 2 | 4200143 | BASE PLATE DE4 1450x300 KIT | 1 |
| 2.1 | | > BASEPLATE_4x4/6/10V_E300_1450x300BOX_150 | 1 |
| 2.2 | 2028654 | > VIBRATION DAMPER D.50X30 M10X28 | 1 |
| 2.3 | 2028281 | > NUT M10 DIN936 (ISO4035) 17H VZ | 1 |
| 2.4 | 4199875 | > HOLDER PUMP Siboost Helix V2/4 KIT | 1 |
| 2.5 | 4197084 | > HOLDER SWITCHBOX WILO Smart Control KIT | 1 |
| 2.6 | 4197085 | > LIFTING Siboost HELIX SC KIT | 1 |
| 3 | 4199876 | SUCTION SIDE Siboost Helix V2/4/6 KIT | 1 |
| 3.1 | 2032610 | > NUT G11/4 MS VP. | 1 |
| 3.2 | 2032611 | > O-RING ID.36,09X3,53N DIN3771 E7502 | 1 |
| 3.3 | 2507646 | > BALL VALVE G11/4"M-F-W.HANDLE 1/4-TURN | 1 |
| 3.4 | 2032613 | > SCREWED FLANGE G1 1/4" LK-75 ST37VZ | 1 |
| 3.5 | 2032614 | > O-RING ID.29,82X2,62N DIN3771 E7502 | 1 |
| 3.6 | 2032615 | > SPACER F.I/A KUH.DN32 CUZN | 1 |
| 3.7 | 2032616 | > O-RING ID.44X3,53N DIN3771 E7502 | 1 |
| 4 | 4199877 | DELIVERY SIDE Siboost Helix V2/4/6 KIT | 1 |
| 3.1 | 2032610 | > NUT G11/4 MS VP. | 1 |
| 3.2 | 2032611 | > O-RING ID.36,09X3,53N DIN3771 E7502 | 1 |
| 3.3 | 2507646 | > BALL VALVE G11/4"M-F-W.HANDLE 1/4-TURN | 1 |
| 3.4 | 2032613 | > SCREWED FLANGE G1 1/4" LK-75 ST37VZ | 1 |
| 3.5 | 2032614 | > O-RING ID.29,82X2,62N DIN3771 E7502 | 1 |
| 4.1 | 2058116 | > SPACER F.I/A KUH.DN32 CUZN | 1 |
| 3.7 | 2032616 | > O-RING ID.44X3,53N DIN3771 E7502 | 1 |
| 4.2 | 2058115 | > HOUSING RFV(RV-IN) DN32 SGS/DRS | 1 |
| 4.3 | 2027870 | > NON-RETURN-DEVICE INSERT DN32(MTR) | 1 |
| 5 | 2032642 | DIAPHREM TANK 8L/PN16 DIN4807/T5 KIT | 1 |
| 5.1 | 2045914 | > DIAPHREM TANK 8L TYP-DD 16BAR | 1 |
| 5.2 | 2027853 | > FLOW FITTING G3/4 FOR DIAPHRAGM VES. | 1 |
| 6 | 4197076 | PRESSURE SENSOR/ GAUGE 0-16BAR KIT | 1 |
| 6.1 | 2085909 | > PRESS.SENSOR 1/4" 0-16BAR 4-20MA VP. | 1 |

| Item | Article no. | Description | Quantity |
|---|---|---|---|
| 6.2 | 4197077 | > T-PIECE 1/4" VP. | 1 |
| 6.3 | 2028692 | > PRESSURE GAUGE NG63-PN16-G1/4 | 1 |
| 6.4 | 2028291 | > BALL TAP R1/4" PN42 GIACOMINI R254DL | 1 |
| 6.5 | 2028691 | > BLOWGUN 1/4" MS 30BAR VP. | 1 |
| 7 | 4200144 | PIPE DE4 21/2''-4x11/4"+2x1/4x900 VP. | 1 |
| 8 | 4200145 | PIPE DE4 21/2''-4x11/4"+2x1/4+1x3/4x900 | 1 |
| 9 | | W-CTRL-SCE-B-4x0,55-1,5KW-T4-FM-ND1 | 1 |
| Note: TO / BIS / JUSQU'AU 18/05/2014 | | | |
| 9 | 2541915 | W-CTRL-SCE-B-4x10A-T34-FM-ND1-AVC-PKG | 1 |
| Note: FROM / AB / À PARTIR DU 19/05/2014 | | | |
| 10 | 4197079 | PLUG G1/4"x10 AISI304 KIT | 1 |
| 11 | 2032654 | PLUG R3/4" MS VIEGA 1751 | 1 |
| 20 | | ASSEMBLY WMS. DE-EB. +VP | 1 |
| 20.1 | 2028652 | > PRESSURE SWITCH PS3-ASR 1/(1,3) VP. | 1 |
| 20.2 | 2130983 | > PLUG PS3-415 WITH KABEL 1,5M 2NO VP. | 1 |
| 20.4 | 2028290 | > CROSSPIECE R1/4" MS-NICKEL | 1 |
| 20.5 | 2028687 | > PRESSURE GAUGE NG63 R1/4" HI.0-6BAR | 1 |
| 20.6 | 2054268 | > DUAL NIPPLE G1/4" x G1/4" MS VP. | 1 |
| 20.7 | 2028691 | > BLOWGUN 1/4" MS 30BAR VP. | 1 |
| 20.8 | 2028291 | > BALL TAP R1/4" PN42 GIACOMINI R254DL | 1 |

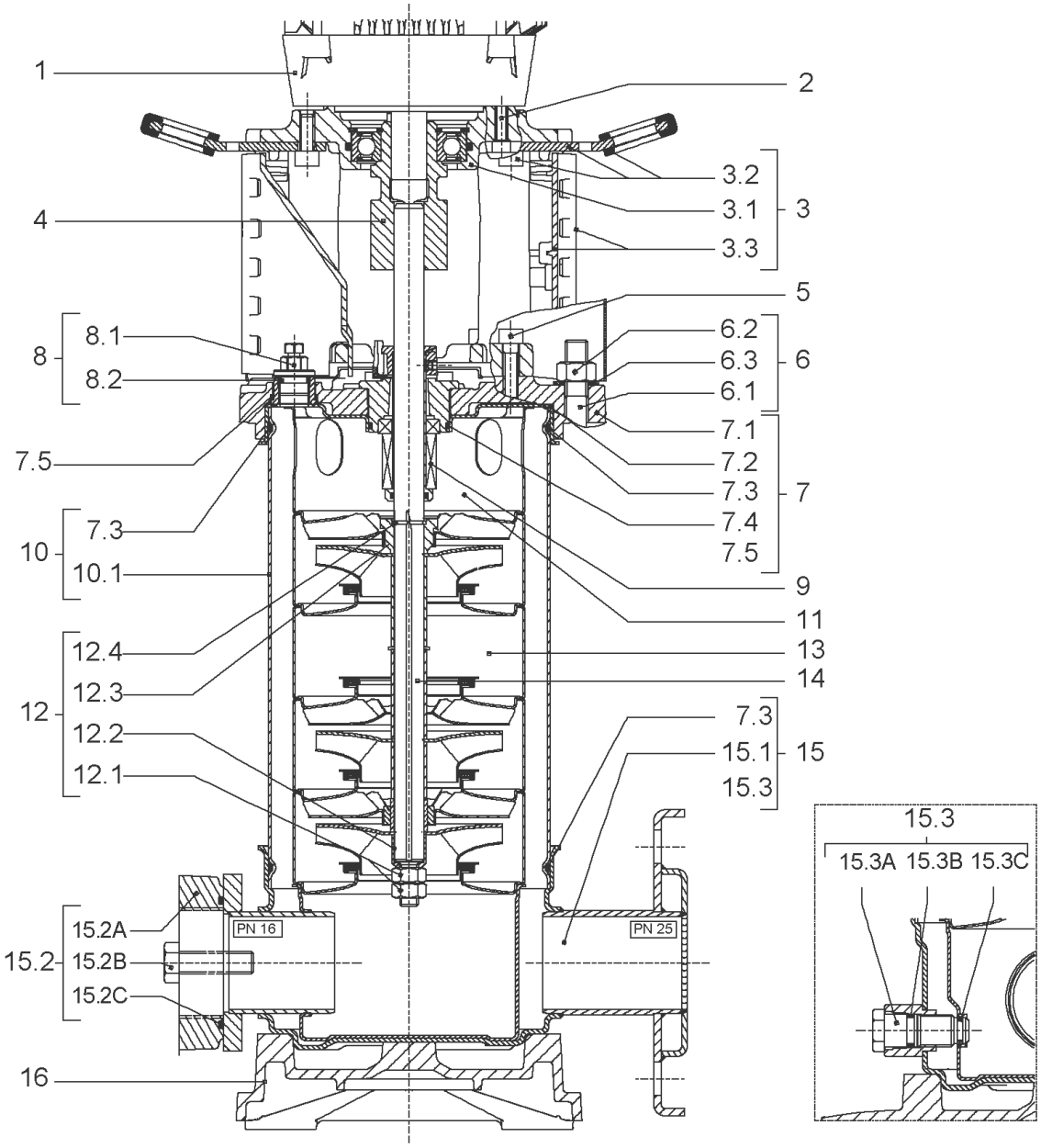
1
2
3.2
3.1
3
3.3
4
5
8.1
8
8.2
6.2
6.3
6
6.1
7.1
7.5
7.2
7.3
7
7.4
7.3
10
7.5
10.1
9
11
12.4
13
12.3
14
12
12.2
7.3
15.1
15
12.1
15.3
15.3
15.3A 15.3B 15.3C
15.2A
PN 16
PN 25
15.2
15.2B
15.2C
16

| Item | Article no. | Description | Quantity |
|---|---|---|---|
| 1 | | DRIVE HELIX-VE602IE2-WE KIT | 1 |
| Note: MOTOR BRAND WILO ELEC | | | |
| 1 | | DRIVE HELIX-VE602-IE4-WE KIT | 1 |
| Note: MOTOR BRAND WILO ELEC | | | |
| 2 | 4159702 | SCREW M6X30 (4 PIECES) | 1 |
| 3 | 4172790 | EQUIPED LANTERN NEXIS FT 100 KIT | 1 |
| 3.1 | | > M+5_6_LANTERN_ONE-PIECE_FT100_CATA | 1 |
| 3.2 | 2127604 | > EYELET CPL.FT HELIX(2 PIECES) | 1 |
| 3.3 | 4159692 | > COUPLING PROTECTOR FT HELIX KIT | 1 |
| 4 | 4159708 | COUPLING D.16XD.19 FT100 HELIX KIT | 1 |
| 5 | 4159707 | SCREW M8X30 (4 PIECES) | 1 |
| 6 | 4177803 | STUD BOLT M12X263 KIT | 1 |
| 6.1 | | > TIE BOLT M12-263x18x30-1.4057 | 1 |
| 6.2 | 2094647 | > NUT M12 M12 ISO4032 VP. | 1 |
| 6.3 | 2123557 | > WASHER CS-12.4-24-1.6-NFE25 (4 PIECES) | 1 |
| 7 | 4210143 | STATIONARY RING HOLDER HELIX 6" EPDM | 1 |
| 7.2 | 2127607 | > STATIONARY RING HOLDER 6" HELIX 1.4301 V | 1 |
| 7.3 | 4176513 | > O-RING FOR PUMP JACKET VP. | 1 |
| 7.4 | 2127603 | > O-RING ID.37,6x2,4 EPDM VP. | 1 |
| 7.5 | 2127602 | > O-RING ID.21,35x2 EPDM VP. | 1 |
| 8 | 4159686 | FILING/PURGING PLUG HELIX EPDM KIT | 1 |
| 9 | 4171327 | SEAL-KIT-HELIX6-10-16 O/E KIT | 1 |
| 10 | 4177804 | HOUSING PIPES D.152X134 1.4301 KIT | 1 |
| 7.3 | 4176513 | > O-RING FOR PUMP JACKET VP. | 1 |
| 10.1 | | > HOUSING-PIPE Ø152-M+1001/02-304 | 1 |
| 11 | 4174087 | CENTERING STAGE-RETURN HELIX6 1.4301VP. | 1 |
| 12 | 4174086 | SHAFTS EQUIPMENT HELIX V6 MONOBLOC KIT | 1 |
| 12.1 | | > NUT-H-M10-A4.70 | 1 |
| 12.2 | | > SERRATED LOCK WASHER M+6M3-316L | 1 |
| 12.3 | | > IMPELLER STOP RING L33,2-304 | 1 |
| 12.4 | | > STOP-RUSH-1/2-D16xd2-M+316 | 1 |
| 13 | | HYDRAULIC HELIX V 602 1.4307 | 1 |
| 14 | 4177807 | SHAFT D.16X255 1.4301 VP. | 1 |
| 15 | 4217897 | PUMP HOUSING HELIX DN32 PN16 1.4301 KIT | 1 |

| Item | Article no. | Description | Quantity |
|---|---|---|---|
| 7.3 | 4176513 | > O-RING FOR PUMP JACKET VP. | 1 |
| 15.1 | | > BLASTING PPE HOUSING V-PN16-DN32-5"-304 | 1 |
| 15.2 | 4217891 | > COUNTER FLANGE-G1"1/4-PN16-GJL KIT | 1 |
| 15.3 | 4171321 | > PRIMING/DRAIN PLUG EPDM HELIX KIT | 1 |
| 16 | 4177964 | BASEPLATE HELIX V2/4/6 PN16 VP. | 1 |

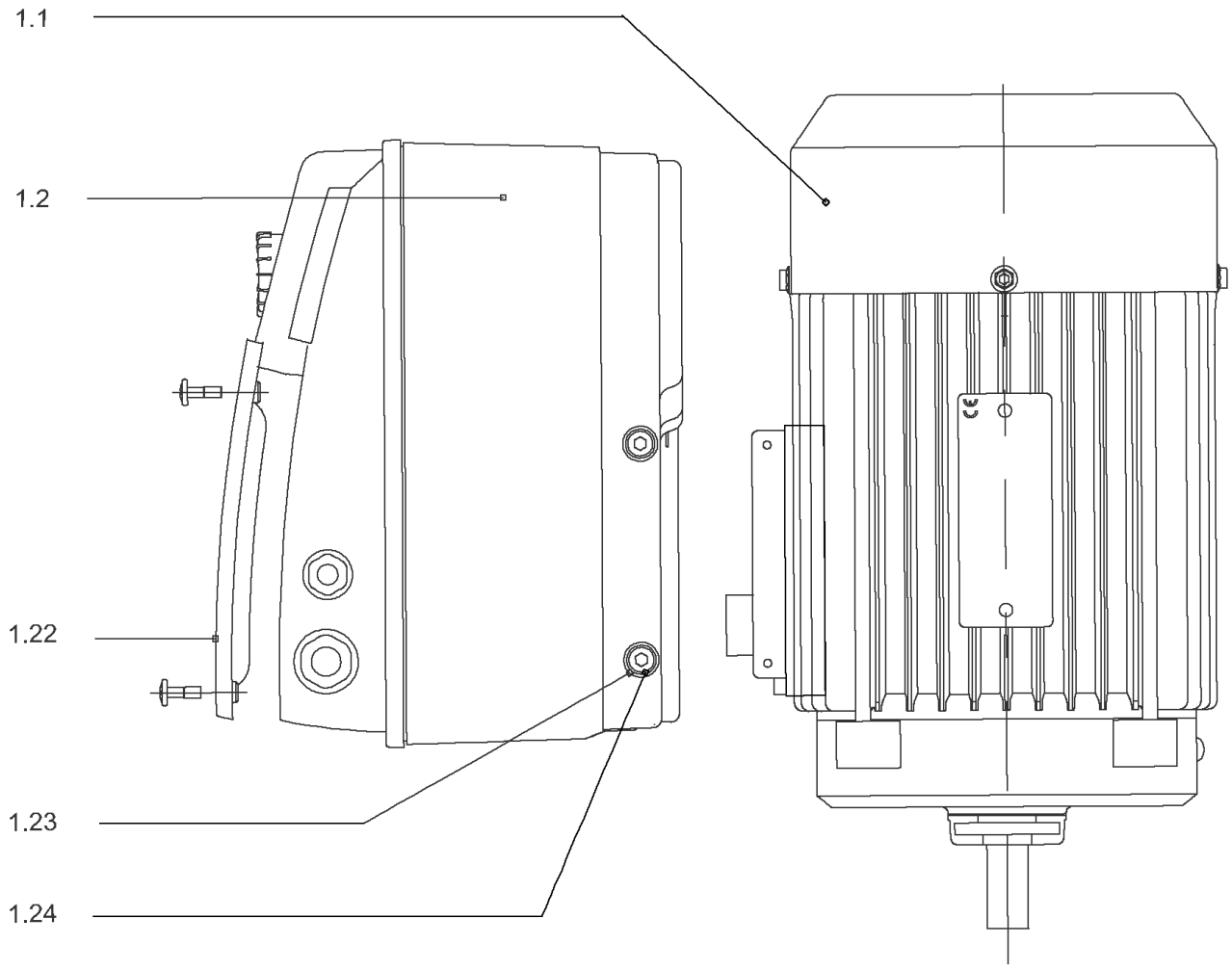
1.1
1.2
1.22
1.23
1.24

## DRIVE HELIX-VE602IE2-WE KIT

| Item | Article no. | Description | Quantity |
|---|---|---|---|
| 1.1 | | MOTOR 0,75/2/80 3~ 380V 60HZ IE2 WE VP. | 1 |
| Note: no longer available/nicht mehrlieferbar/n'est plus disponible | | | |
| | | SPARE PARTS MOTOR:ON REQUEST | 1 |
| 1.2 | 4186330 | MODULE HELIX-VE602-IE2-WE KIT | 1 |
| 1.22 | 2054372 | > MODULE COVER TL1,TL2+GASKET KIT | 1 |
| 1.23 | 4215716 | > SCREW M5X16 DIN912 8.8 A2A (4pieces) VP. | 1 |
| 1.24 | 2057978 | > RONDELLE A5,3 DIN6797 FST ZN (4 PIECES) | 1 |

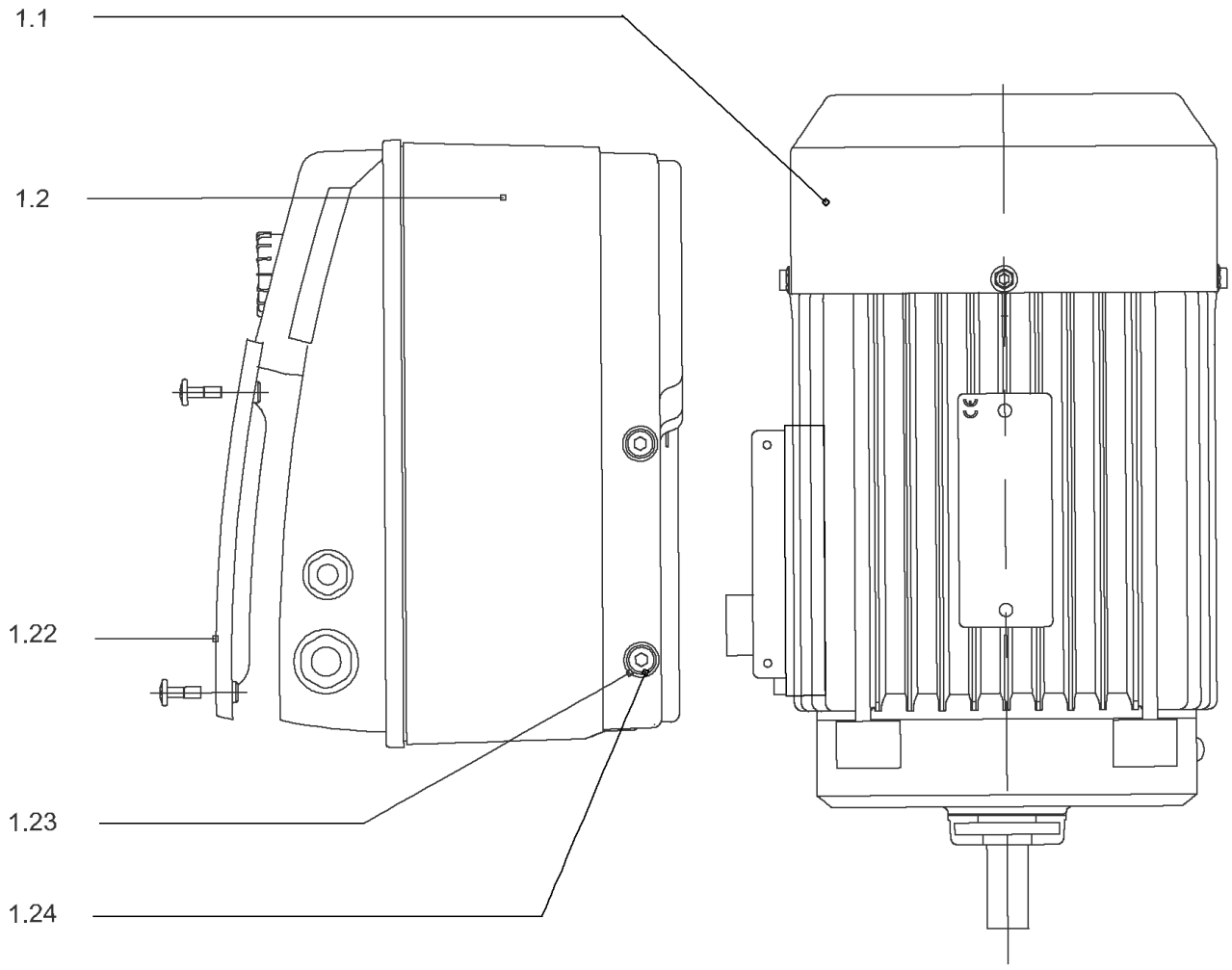
1.1
1.2
1.22
1.23
1.24

## DRIVE HELIX-VE602-IE4-WE KIT

| Item | Article no. | Description | Quantity |
|---|---|---|---|
| 1.1 | 4207914 | MOTOR 0.75/2/80 3~ 380V 60HZ IE4 WE VP. | 1 |
| | | SPARE PARTS MOTOR:ON REQUEST | 1 |
| 1.2 | 4209323 | MODULE HELIX-VE602-IE4-WE KIT | 1 |
| 1.22 | 2054372 | > MODULE COVER TL1,TL2+GASKET KIT | 1 |
| 1.23 | 4215716 | > SCREW M5X16 DIN912 8.8 A2A (4pieces) VP. | 1 |
| 1.24 | 2057978 | > RONDELLE A5,3 DIN6797 FST ZN (4 PIECES) | 1 |

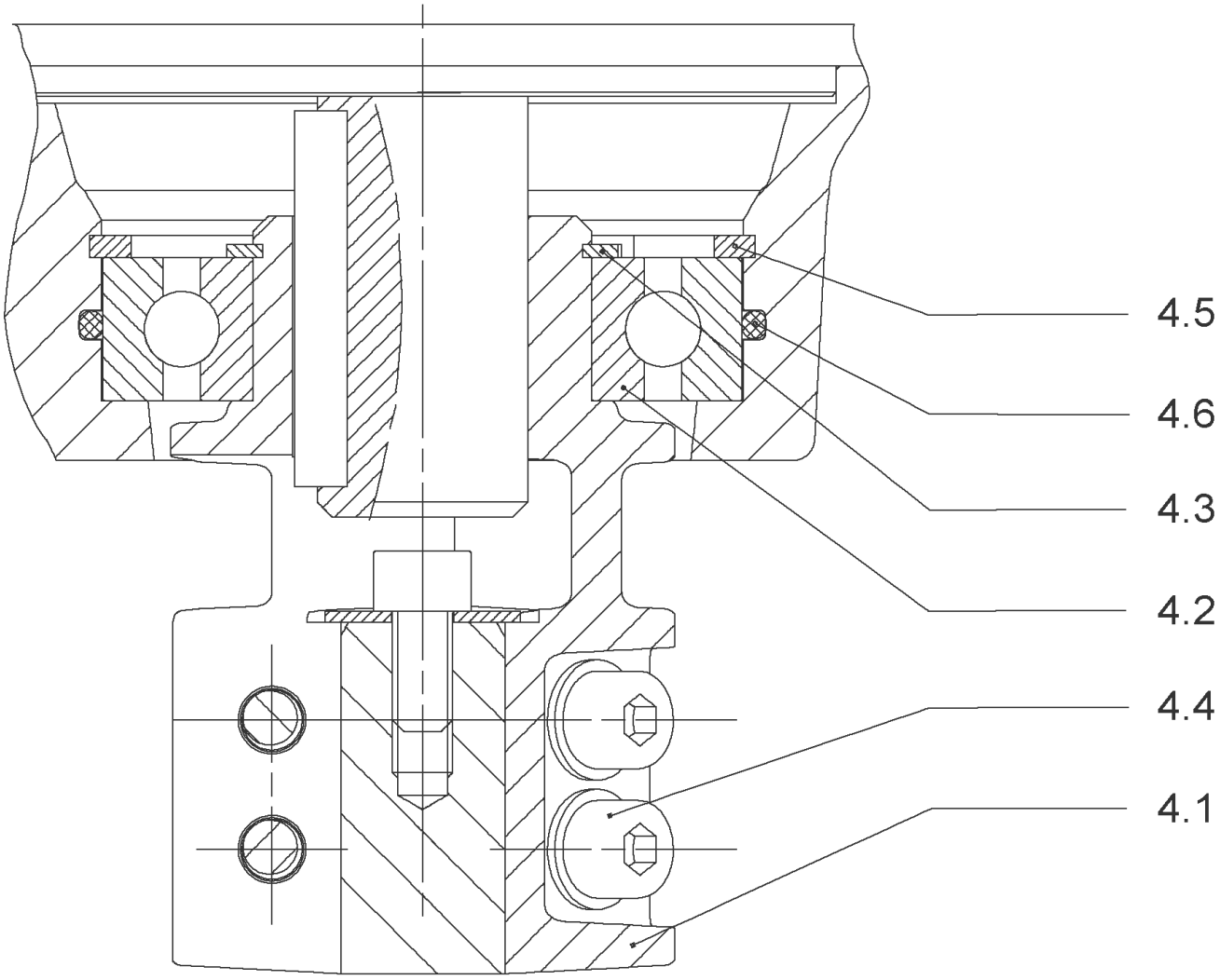
4.5
4.6
4.3
4.2
4.4
4.1

## COUPLING D.16XD.19 FT100 HELIX KIT (4159708)

| Item | Article no. | Description | Quantity |
|---|---|---|---|
| 4.1 | | COUPLING M+ Ø16XØ19 FT100 MACHINED | 1 |
| 4.2 | 2130977 | BALL BEARING 6206/ZZ-C3(HT)VP. | 1 |
| 4.3 | 4234249 | CIRCLIP-FOR-SHAFT-D30x1.5 VP. | 1 |
| 4.4 | 4212716 | SCREW M6X20 KIT (4PIECES) | 1 |
| 4.5 | 4234250 | CIRCLIP-D62x2 VP. | 1 |
| 4.6 | 4234245 | O-RING 63X3 VP. | 1 |
| | | CONTACT-WASHER-6ETR-6,1x12,2x1,8-STEEL | 1 |

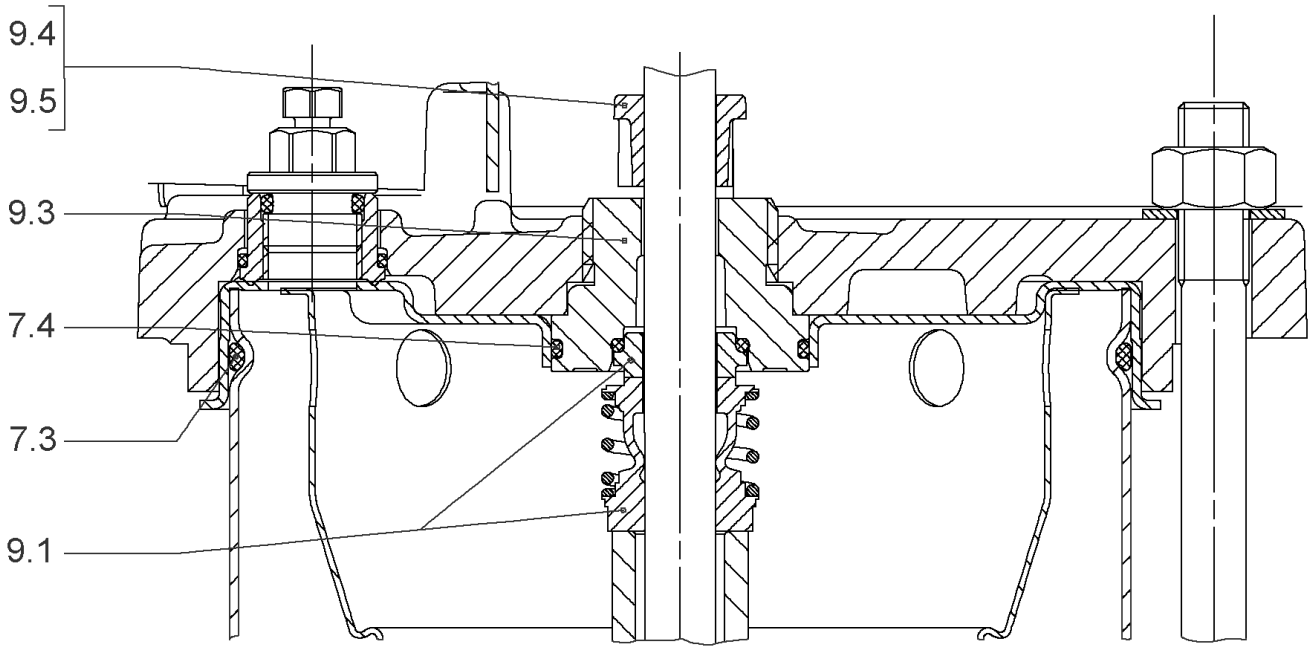
9.4
9.5
9.3
7.4
7.3
9.1

## SEAL-KIT-HELIX6-10-16 O/E KIT (4171327)

| Item | Article no. | Description | Quantity |
|---|---|---|---|
| 7.3 | 4176513 | O-RING FOR PUMP JACKET VP. | 1 |
| 7.4 | 2127603 | O-RING ID.37,6x2,4 EPDM VP. | 1 |
| 9.1 | 4177801 | MECH.SEAL HELIX6-10-16 O/E VP. | 1 |
| 9.3 | 4177798 | MACHINED RING HOLDER M+6" Ø16 304 VP. | 1 |
| 9.5 | 4177799 | MACHINED DRIVE RING Ø16 VP. | 1 |
| 9.4 | 4176520 | SCREW CH M5x5 A4-70 ( 3PIECES ) | 1 |

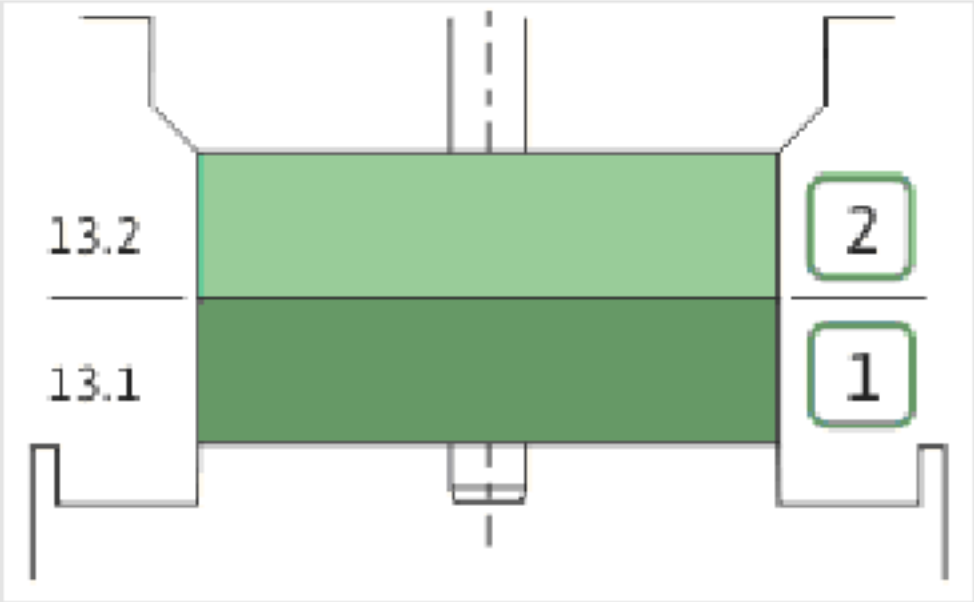
13.2
13.1
2
1

| Item | Article no. | Description | Quantity |
|---|---|---|---|
| 13.1 | 4174084 | STAGE HELIX 6 1.4301 KIT | 1 |
| | | > MACH.STG-CASING-WOGV-WNR-M+6-304 | 1 |
| | | > IMPELLER-M+6-304 | 1 |
| 13.2 | 4174089 | INTERMEDIATE STAGE HELIX 6 1.4301 KIT | 1 |
| | | > MACH.BEARING-STG-CASING-WNR-M+6-304 | 1 |
| | | > IMPELLER-M+6-304 | 1 |
| | | > SHAFT SLEEVE-SPACER-Ø19,35x18,465-304 | 1 |
| | | > SHAFT-SLEEVE-D16xD20x18-CW | 1 |

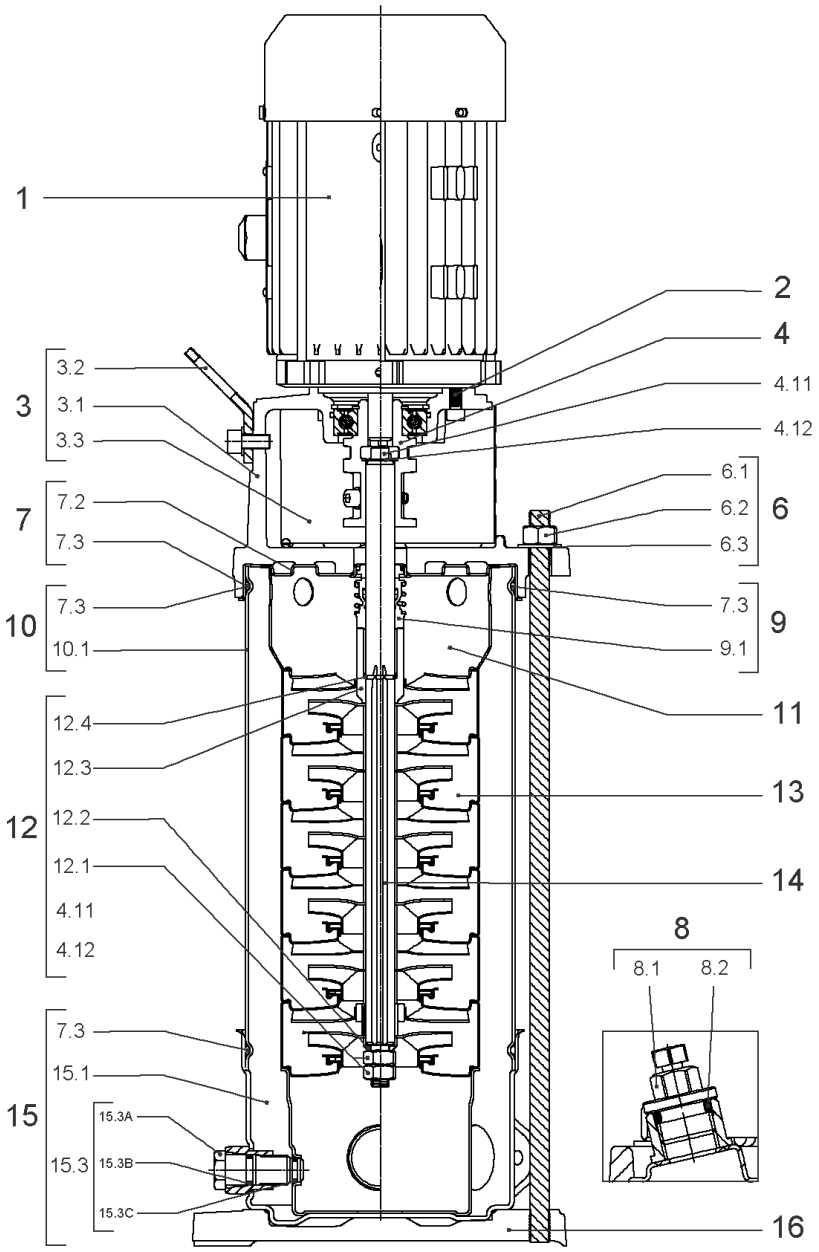
1
2
4
4.11
4.12
3
3.2
3.1
3.3
7
7.2
7.3
10
7.3
10.1
6
6.1
6.2
6.3
9
7.3
9.1
11
12
12.4
12.3
12.2
12.1
4.11
4.12
13
14
8
8.1
8.2
15
7.3
15.1
15.3
15.3A
15.3B
15.3C
16

## HELIX VE602-1/16/E/S (4201577)

| Item | Article no. | Description | Quantity |
|---|---|---|---|
| 1 | | DRIVE HELIX-VE602-IE4-WE KIT | 1 |
| Note: MOTOR BRAND WILO ELEC | | | |
| | | SPARE PARTS MOTOR:ON REQUEST | 1 |
| 2 | 4212716 | SCREW M6X20 KIT (4PIECES) | 1 |
| 3 | 4213752 | LANTERN FT100 HELIX KIT | 1 |
| 3.1 | | > LANT-MOT-VMI-ReDTC6"-FT100-MACHINED+CATA | 1 |
| 3.2 | 4184852 | > EYELET CPL.FT HELIX (2 PIECES) | 1 |
| 3.3 | 4213713 | > COUPLING PROTECTOR FT85/100 HELIX KIT | 1 |
| 4 | 4159708 | COUPLING D.16XD.19 FT100 HELIX KIT | 1 |
| 6 | 4177803 | STUD BOLT M12X263 KIT | 1 |
| 6.1 | | > TIE BOLT M12-263x18x30-1.4057 | 1 |
| 6.2 | 2094647 | > NUT M12 M12 ISO4032 VP. | 1 |
| 6.3 | 2123557 | > WASHER CS-12.4-24-1.6-NFE25 (4 PIECES) | 1 |
| 7 | 4214481 | STATIONARY RING HOLDER HELIX D27 ReDTC | 1 |
| 7.2 | 4214479 | > STATIONARY RING HOLDER HELIX D27 VP. | 1 |
| 7.3 | 4176513 | > O-RING FOR PUMP JACKET VP. | 1 |
| 8 | 4212724 | FILING/PURGING PLUG HELIX ReDTC KIT | 1 |
| 8.1 | | > FILLING PLUG MVI6"-304 | 1 |
| 8.2 | 4177800 | > O-RING EPDM PLUG HELIX VP. | 1 |
| 9 | 4214483 | MECH.SEAL HELIX6-10-16 O/E ReDTC KIT | 1 |
| 9.1 | 4177801 | > MECH.SEAL HELIX6-10-16 O/E VP. | 1 |
| 7.3 | 4176513 | > O-RING FOR PUMP JACKET VP. | 1 |
| 10 | 4177804 | HOUSING PIPES D.152X134 1.4301 KIT | 1 |
| 7.3 | 4176513 | > O-RING FOR PUMP JACKET VP. | 1 |
| 10.1 | | > HOUSING-PIPE Ø152-M+1001/02-304 | 1 |
| 11 | 4174087 | CENTERING STAGE-RETURN HELIX6 1.4301VP. | 1 |
| 12 | 4214486 | SHAFT EQUIPMENT HELIX V6 ReDTC KIT | 1 |
| 12.1 | | > NUT-H-M10-A4.70 | 1 |
| 12.2 | | > SERRATED LOCK WASHER M+6M3-316L | 1 |
| 12.3 | | > 1/2-SNAP-RING-6/10M3-316L | 1 |
| 12.4 | | > STOP-RUSH-1/2-D16xd2-M+316 | 1 |
| 4.11 | | > SCREW CHC-M6X14-8.8-ISO4762-GEOMET500A | 1 |
| 4.12 | | > WASHER D.24 L6U ZINK | 1 |
| 13 | | HYDRAULIC HELIX V 602 1.4307 | 1 |

| Item | Article no. | Description | Quantity |
|---|---|---|---|
| 14 | 4214488 | SHAFT D.16X203 HELIX 1.4057 VP. | 1 |
| 15 | 4217897 | PUMP HOUSING HELIX DN32 PN16 1.4301 KIT | 1 |
| 7.3 | 4176513 | > O-RING FOR PUMP JACKET VP. | 1 |
| 15.1 | | > BLASTING PPE HOUSING V-PN16-DN32-5"-304 | 1 |
| 15.2 | 4217891 | > COUNTER FLANGE-G1"1/4-PN16-GJL KIT | 1 |
| 15.3 | 4171321 | > PRIMING/DRAIN PLUG EPDM HELIX KIT | 1 |
| 16 | 4177964 | BASEPLATE HELIX V2/4/6 PN16 VP. | 1 |

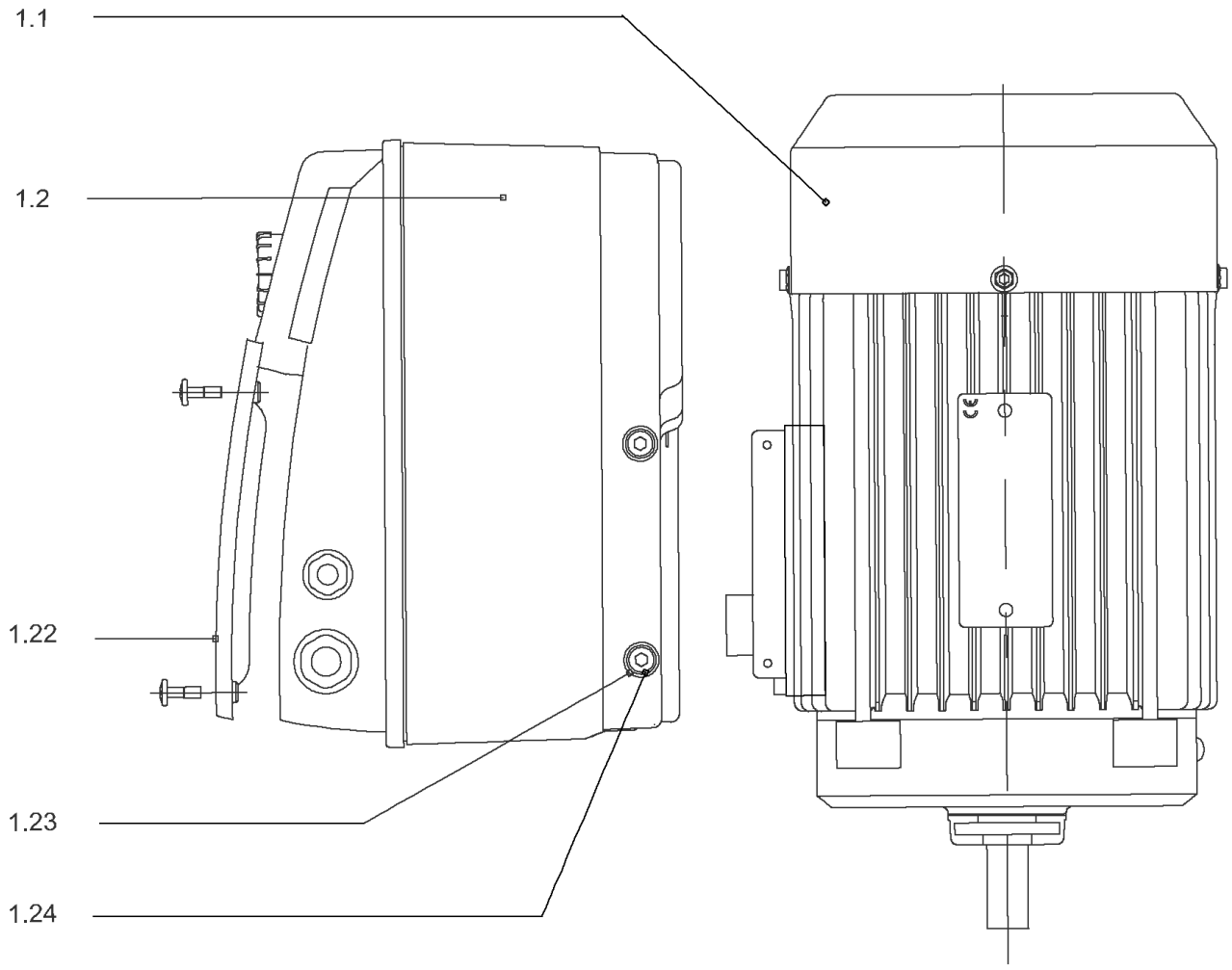
1.1
1.2
1.22
1.23
1.24

## DRIVE HELIX-VE602-IE4-WE KIT

| Item | Article no. | Description | Quantity |
|---|---|---|---|
| 1.1 | 4207914 | MOTOR 0.75/2/80 3~ 380V 60HZ IE4 WE VP. | 1 |
| | | SPARE PARTS MOTOR:ON REQUEST | 1 |
| 1.2 | 4209323 | MODULE HELIX-VE602-IE4-WE KIT | 1 |
| 1.22 | 2054372 | > MODULE COVER TL1,TL2+GASKET KIT | 1 |
| 1.23 | 4215716 | > SCREW M5X16 DIN912 8.8 A2A (4pieces) VP. | 1 |
| 1.24 | 2057978 | > RONDELLE A5,3 DIN6797 FST ZN (4 PIECES) | 1 |

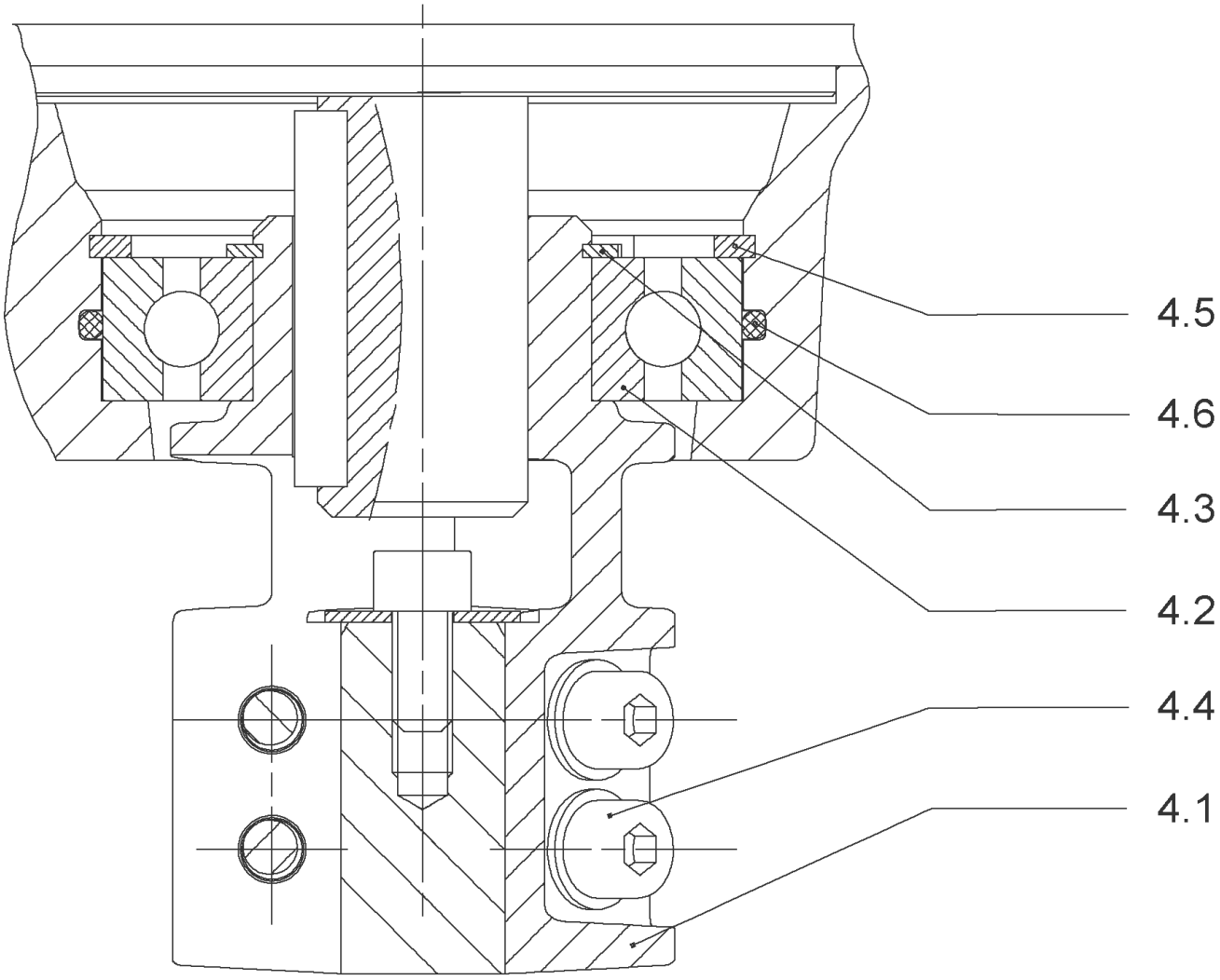
4.5
4.6
4.3
4.2
4.4
4.1

## COUPLING D.16XD.19 FT100 HELIX KIT (4159708)

| Item | Article no. | Description | Quantity |
|---|---|---|---|
| 4.1 | | COUPLING M+ Ø16XØ19 FT100 MACHINED | 1 |
| 4.2 | 2130977 | BALL BEARING 6206/ZZ-C3(HT)VP. | 1 |
| 4.3 | 4234249 | CIRCLIP-FOR-SHAFT-D30x1.5 VP. | 1 |
| 4.4 | 4212716 | SCREW M6X20 KIT (4PIECES) | 1 |
| 4.5 | 4234250 | CIRCLIP-D62x2 VP. | 1 |
| 4.6 | 4234245 | O-RING 63X3 VP. | 1 |
| | | CONTACT-WASHER-6ETR-6,1x12,2x1,8-STEEL | 1 |

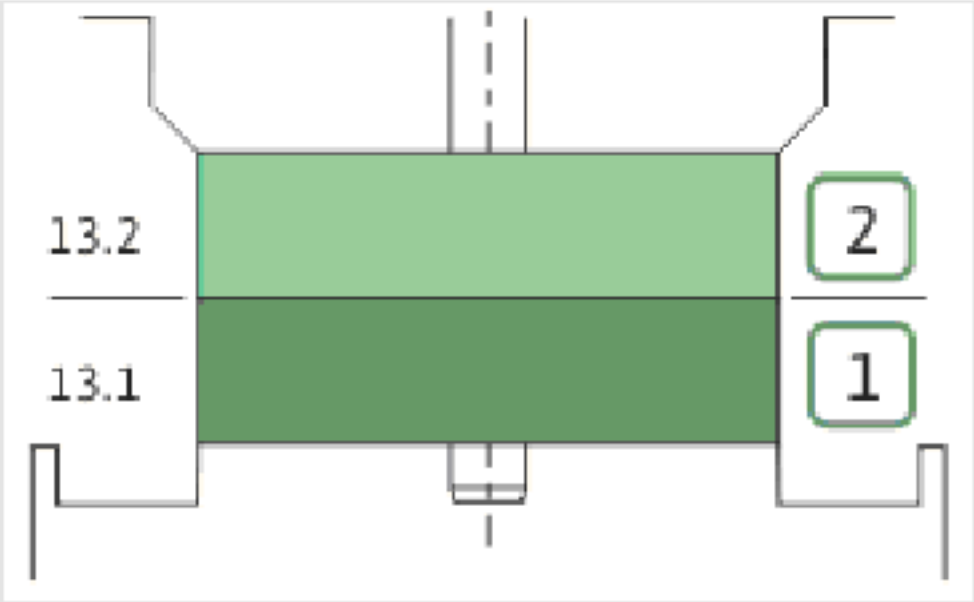
13.2
13.1
2
1

| Item | Article no. | Description | Quantity |
|---|---|---|---|
| 13.1 | 4174084 | STAGE HELIX 6 1.4301 KIT | 1 |
| | | > MACH.STG-CASING-WOGV-WNR-M+6-304 | 1 |
| | | > IMPELLER-M+6-304 | 1 |
| 13.2 | 4174089 | INTERMEDIATE STAGE HELIX 6 1.4301 KIT | 1 |
| | | > MACH.BEARING-STG-CASING-WNR-M+6-304 | 1 |
| | | > IMPELLER-M+6-304 | 1 |
| | | > SHAFT SLEEVE-SPACER-Ø19,35x18,465-304 | 1 |
| | | > SHAFT-SLEEVE-D16xD20x18-CW | 1 |

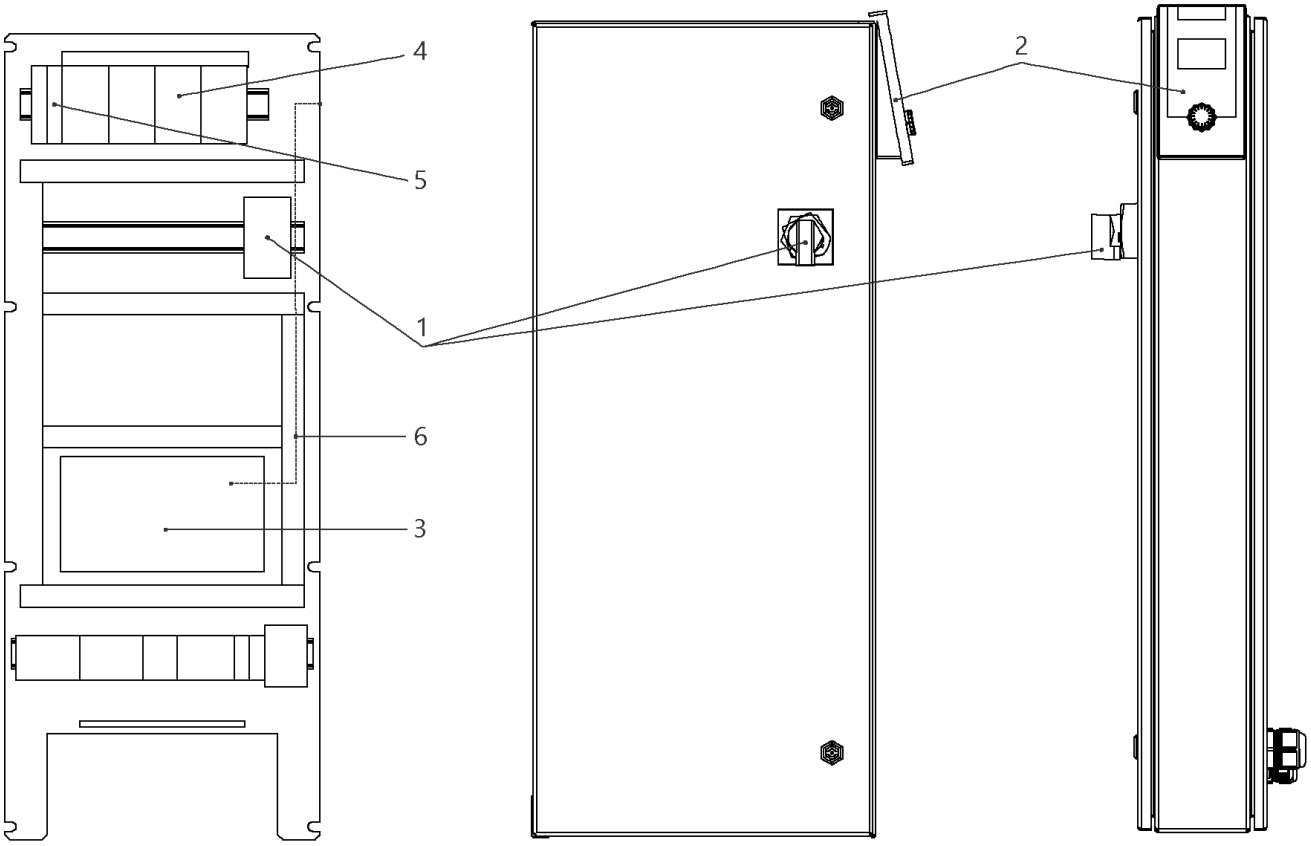
4
5
1
6
3
2

## W-CTRL-SCE-B-4x0,55-1,5KW-T4-FM-ND1

| Item | Article no. | Description | Quantity |
|---|---|---|---|
| 1 | 2104470 | MAIN SWITCH OT40F3 L250 KIT | 1 |
| 2 | 4184784 | CONTROL PANEL HMI SC KIT | 1 |
| 2 | 4185259 | ASSEMBLY DISPLAY SC PKG VP. | 1 |
| 3 | 4185257 | ASSEMBLY CPU SCe Booster VP. | 1 |
| 4 | 2051217 | AUTOM.CIRCUIT BREAKER S203 B16 TO7,5kW | 1 |
| 5 | 2046288 | CIRCUIT BREAKER S201 B16 | 1 |
| 6 | 4197081 | CABLE RJ45 CAT6 0,5M RED SC-PANEL VP. | 1 |

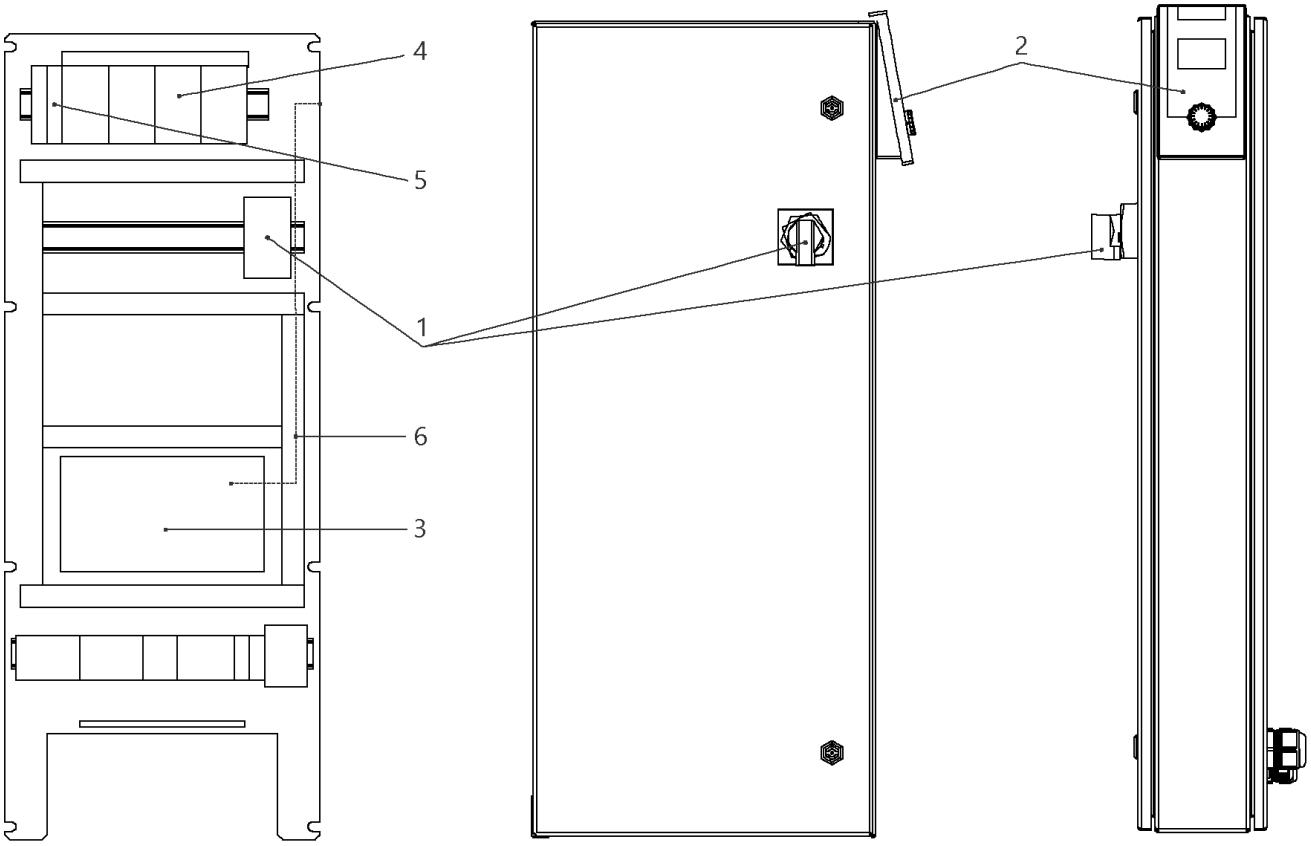
4
5
1
6
3
2

## W-CTRL-SCE-B-4x10A-T34-FM-ND1-AVC-PKG (2541915)

| Item | Article no. | Description | Quantity |
|---|---|---|---|
| 1 | 2104473 | MAIN SWITCH OT63F3 L105 KIT | 1 |
| 2 | 4184784 | CONTROL PANEL HMI SC KIT | 1 |
| 2 | 4185259 | ASSEMBLY DISPLAY SC PKG VP. | 1 |
| Note: DISPLAY ALONE / PLATINE SEULE | | | |
| 3 | 4185257 | ASSEMBLY CPU SCe Booster VP. | 1 |
| 5 | 2046288 | CIRCUIT BREAKER S201 B16 | 1 |
| 4 | 2119861 | AUTOMATIC CIRCUIT BREAKER S203 B13 3POL. | 1 |
| 6 | 4197081 | CABLE RJ45 CAT6 0,5M RED SC-PANEL VP. | 1 |

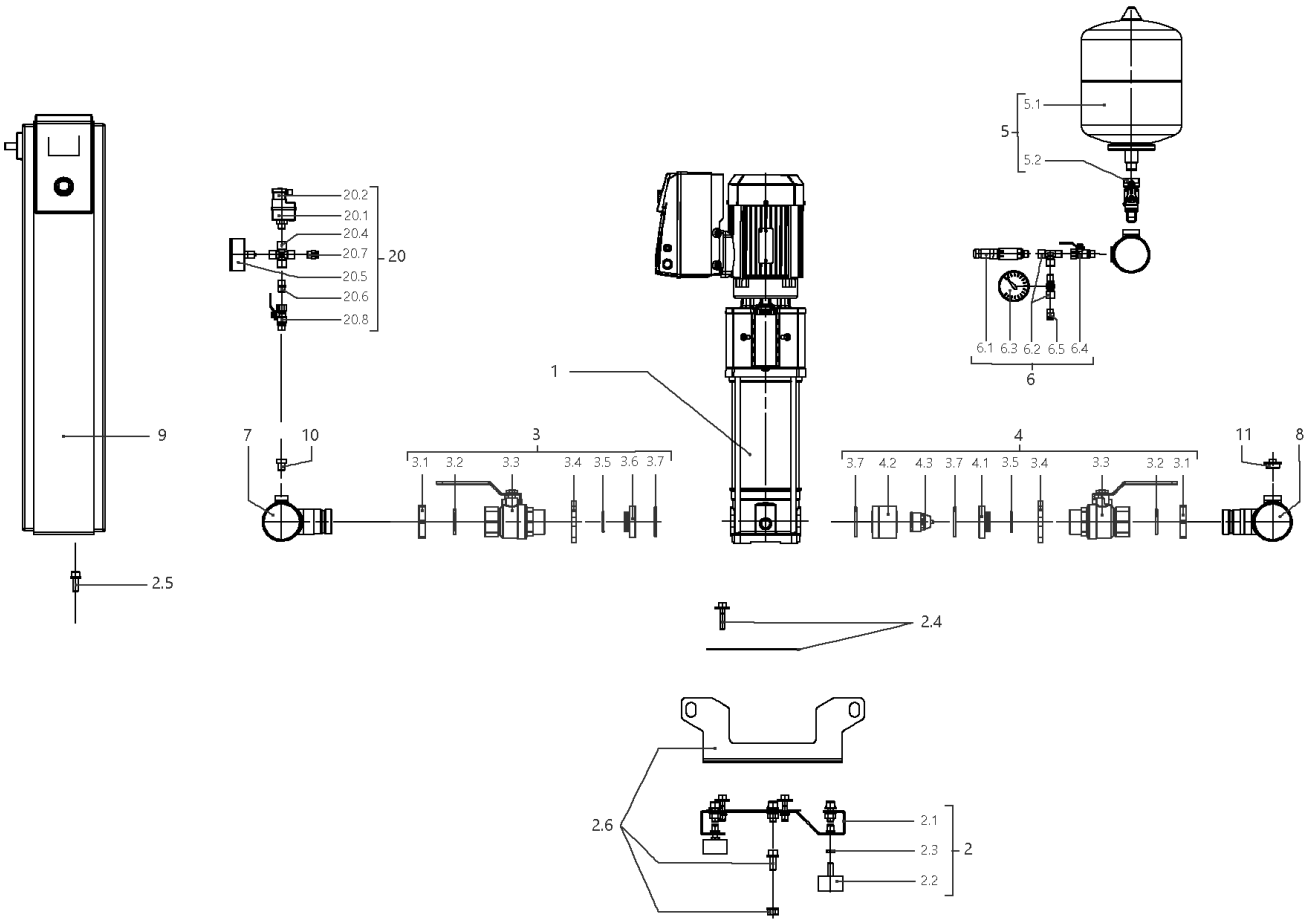
5.1
5
5.2
20.2
20.1
20.4
20.7
20
20.5
20.6
20.8
6.1 6.3 6.2 6.5 6.4
6
1
9
7
10
3
3.1 3.2 3.3 3.4 3.5 3.6 3.7
4
3.7 4.2 4.3 3.7 4.1 3.5 3.4 3.3 3.2 3.1
11
8
2.5
2.4
2.6
2.1
2.3
2
2.2

## SiBoost Smart 4HELIX VE603 (2536378)

| Item | Article no. | Description | Quantity |
|---|---|---|---|
| 1 | | HELIX VE603-1/16/E/S | 1 |
| Note: TO / BIS / JUSQU'AU 31/03/2016 | | | |
| 1 | 4201579 | HELIX VE603-1/16/E/S | 1 |
| Note: FROM / AB / À PARTIR DU 01/04/2016 | | | |
| 2 | 4200146 | BASE PLATE DE4 1450x420 KIT | 1 |
| Note: TO / BIS / JUSQU'AU 28/02/2013 | | | |
| 2.1 | | > BASEPLATE_4x4/6/10/16V_E300_BOX_150 | 1 |
| 2.2 | 2028654 | > VIBRATION DAMPER D.50X30 M10X28 | 1 |
| 2.3 | 2028281 | > NUT M10 DIN936 (ISO4035) 17H VZ | 1 |
| 2.4 | 4199875 | > HOLDER PUMP Siboost Helix V2/4 KIT | 1 |
| 2.5 | 4197084 | > HOLDER SWITCHBOX WILO Smart Control KIT | 1 |
| 2.6 | 4197117 | > LIFTING Siboost HELIX SC KIT | 1 |
| 2 | 4200143 | BASE PLATE DE4 1450x300 KIT | 1 |
| Note: FROM / AB / À PARTIR DU 01/03/2013 | | | |
| 2.1 | | > BASEPLATE_4x4/6/10V_E300_1450x300BOX_150 | 1 |
| 2.2 | 2028654 | > VIBRATION DAMPER D.50X30 M10X28 | 1 |
| 2.3 | 2028281 | > NUT M10 DIN936 (ISO4035) 17H VZ | 1 |
| 2.4 | 4199875 | > HOLDER PUMP Siboost Helix V2/4 KIT | 1 |
| 2.5 | 4197084 | > HOLDER SWITCHBOX WILO Smart Control KIT | 1 |
| 2.6 | 4197085 | > LIFTING Siboost HELIX SC KIT | 1 |
| 3 | 4199876 | SUCTION SIDE Siboost Helix V2/4/6 KIT | 1 |
| 3.1 | 2032610 | > NUT G11/4 MS VP. | 1 |
| 3.2 | 2032611 | > O-RING ID.36,09X3,53N DIN3771 E7502 | 1 |
| 3.3 | 2507646 | > BALL VALVE G11/4"M-F-W.HANDLE 1/4-TURN | 1 |
| 3.4 | 2032613 | > SCREWED FLANGE G1 1/4" LK-75 ST37VZ | 1 |
| 3.5 | 2032614 | > O-RING ID.29,82X2,62N DIN3771 E7502 | 1 |
| 3.6 | 2032615 | > SPACER F.I/A KUH.DN32 CUZN | 1 |
| 3.7 | 2032616 | > O-RING ID.44X3,53N DIN3771 E7502 | 1 |
| 4 | 4199877 | DELIVERY SIDE Siboost Helix V2/4/6 KIT | 1 |
| 3.1 | 2032610 | > NUT G11/4 MS VP. | 1 |
| 3.2 | 2032611 | > O-RING ID.36,09X3,53N DIN3771 E7502 | 1 |
| 3.3 | 2507646 | > BALL VALVE G11/4"M-F-W.HANDLE 1/4-TURN | 1 |
| 3.4 | 2032613 | > SCREWED FLANGE G1 1/4" LK-75 ST37VZ | 1 |
| 3.5 | 2032614 | > O-RING ID.29,82X2,62N DIN3771 E7502 | 1 |

| Item | Article no. | Description | Quantity |
|---|---|---|---|
| 4.1 | 2058116 | > SPACER F.I/A KUH.DN32 CUZN | 1 |
| 3.7 | 2032616 | > O-RING ID.44X3,53N DIN3771 E7502 | 1 |
| 4.2 | 2058115 | > HOUSING RFV(RV-IN) DN32 SGS/DRS | 1 |
| 4.3 | 2027870 | > NON-RETURN-DEVICE INSERT DN32(MTR) | 1 |
| 5 | 2032642 | DIAPHREM TANK 8L/PN16 DIN4807/T5 KIT | 1 |
| 5.1 | 2045914 | > DIAPHREM TANK 8L TYP-DD 16BAR | 1 |
| 5.2 | 2027853 | > FLOW FITTING G3/4 FOR DIAPHRAGM VES. | 1 |
| 6 | 4197076 | PRESSURE SENSOR/ GAUGE 0-16BAR KIT | 1 |
| 6.1 | 2085909 | > PRESS.SENSOR 1/4" 0-16BAR 4-20MA VP. | 1 |
| 6.2 | 4197077 | > T-PIECE 1/4" VP. | 1 |
| 6.3 | 2028692 | > PRESSURE GAUGE NG63-PN16-G1/4 | 1 |
| 6.4 | 2028291 | > BALL TAP R1/4" PN42 GIACOMINI R254DL | 1 |
| 6.5 | 2028691 | > BLOWGUN 1/4" MS 30BAR VP. | 1 |
| 7 | 4200144 | PIPE DE4 21/2''-4x11/4"+2x1/4x900 VP. | 1 |
| 8 | 4200145 | PIPE DE4 21/2''-4x11/4"+2x1/4+1x3/4x900 | 1 |
| 9 | | W-CTRL-SCE-B-4x1,1KW-T4-FM-ND2 | 1 |
| Note: TO / BIS / JUSQU'AU 28/02/2013 | | | |
| 9 | | W-CTRL-SCE-B-4x0,55-1,5KW-T4-FM-ND1 | 1 |
| Note: FROM / AB / À PARTIR DU 01/03/2013 - TO / BIS / JUSQU'AU 18/05/2014 | | | |
| 9 | 2541915 | W-CTRL-SCE-B-4x10A-T34-FM-ND1-AVC-PKG | 1 |
| Note: FROM / AB / À PARTIR DU 19/05/2014 | | | |
| 10 | 4197079 | PLUG G1/4"x10 AISI304 KIT | 1 |
| 11 | 2032654 | PLUG R3/4" MS VIEGA 1751 | 1 |
| 20 | | ASSEMBLY WMS. DE-EB. +VP | 1 |
| 20.1 | 2028652 | > PRESSURE SWITCH PS3-ASR 1/(1,3) VP. | 1 |
| 20.2 | 2130983 | > PLUG PS3-415 WITH KABEL 1,5M 2NO VP. | 1 |
| 20.4 | 2028290 | > CROSSPIECE R1/4" MS-NICKEL | 1 |
| 20.5 | 2028687 | > PRESSURE GAUGE NG63 R1/4" HI.0-6BAR | 1 |
| 20.6 | 2054268 | > DUAL NIPPLE G1/4" x G1/4" MS VP. | 1 |
| 20.7 | 2028691 | > BLOWGUN 1/4" MS 30BAR VP. | 1 |
| 20.8 | 2028291 | > BALL TAP R1/4" PN42 GIACOMINI R254DL | 1 |

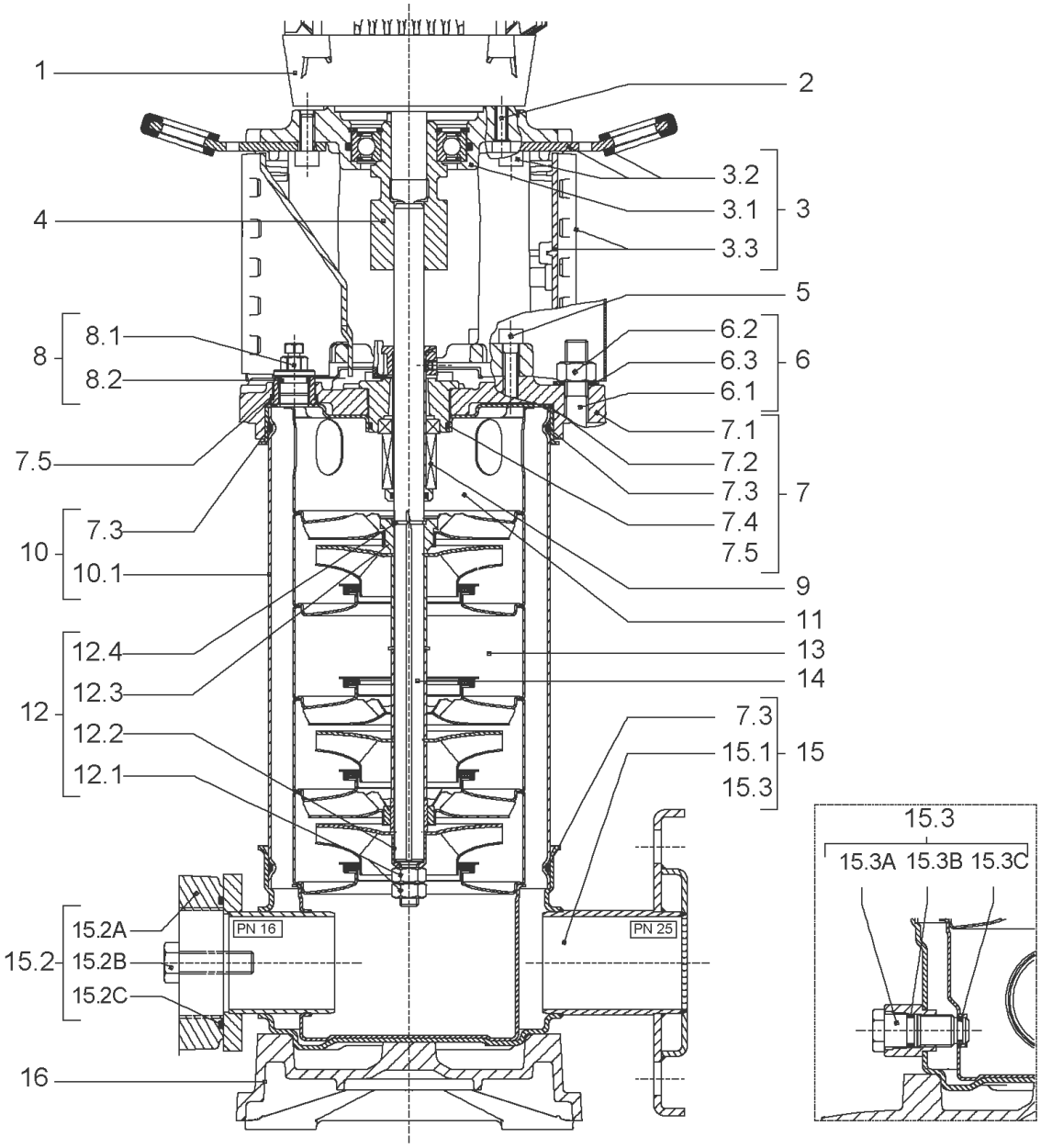
1
2
3.2
3.1
3
3.3
4
5
8.1
8
8.2
6.2
6.3
6
6.1
7.1
7.5
7.2
7.3
7
7.4
7.3
10
7.5
10.1
9
11
12.4
13
12.3
14
12
12.2
7.3
15.1
15
12.1
15.3
15.3
15.3A 15.3B 15.3C
15.2A
PN 16
PN 25
15.2
15.2B
15.2C
16

| Item | Article no. | Description | Quantity |
|---|---|---|---|
| 1 | | DRIVE HELIX-VE603-IE2-WE KIT | 1 |
| Note: MOTOR BRAND WILO ELEC | | | |
| 1 | | DRIVE HELIX-VE603-IE4-WE KIT | 1 |
| Note: MOTOR BRAND WILO ELEC | | | |
| 2 | 4159702 | SCREW M6X30 (4 PIECES) | 1 |
| 3 | 4172790 | EQUIPED LANTERN NEXIS FT 100 KIT | 1 |
| 3.1 | | > M+5_6_LANTERN_ONE-PIECE_FT100_CATA | 1 |
| 3.2 | 2127604 | > EYELET CPL.FT HELIX(2 PIECES) | 1 |
| 3.3 | 4159692 | > COUPLING PROTECTOR FT HELIX KIT | 1 |
| 4 | 4159708 | COUPLING D.16XD.19 FT100 HELIX KIT | 1 |
| 5 | 4159707 | SCREW M8X30 (4 PIECES) | 1 |
| 6 | 4177812 | STUD BOLT M12X300KIT | 1 |
| 6.1 | | > TIE BOLT M12-300x18x30-1.4057 | 1 |
| 6.2 | 2094647 | > NUT M12 M12 ISO4032 VP. | 1 |
| 6.3 | 2123557 | > WASHER CS-12.4-24-1.6-NFE25 (4 PIECES) | 1 |
| 7 | 4210143 | STATIONARY RING HOLDER HELIX 6" EPDM | 1 |
| 7.2 | 2127607 | > STATIONARY RING HOLDER 6" HELIX 1.4301 V | 1 |
| 7.3 | 4176513 | > O-RING FOR PUMP JACKET VP. | 1 |
| 7.4 | 2127603 | > O-RING ID.37,6x2,4 EPDM VP. | 1 |
| 7.5 | 2127602 | > O-RING ID.21,35x2 EPDM VP. | 1 |
| 8 | 4159686 | FILING/PURGING PLUG HELIX EPDM KIT | 1 |
| 9 | 4171327 | SEAL-KIT-HELIX6-10-16 O/E KIT | 1 |
| 10 | 4177813 | HOUSING PIPE D.152x172 1.4301 KIT | 1 |
| 7.3 | 4176513 | > O-RING FOR PUMP JACKET VP. | 1 |
| 10.1 | | > HOUSING-PIPE Ø152-M+1003-304 | 1 |
| 11 | 4174087 | CENTERING STAGE-RETURN HELIX6 1.4301VP. | 1 |
| 12 | 4174086 | SHAFTS EQUIPMENT HELIX V6 MONOBLOC KIT | 1 |
| 12.1 | | > NUT-H-M10-A4.70 | 1 |
| 12.2 | | > SERRATED LOCK WASHER M+6M3-316L | 1 |
| 12.3 | | > IMPELLER STOP RING L33,2-304 | 1 |
| 12.4 | | > STOP-RUSH-1/2-D16xd2-M+316 | 1 |
| 13 | | HYDRAULIC HELIX V 603 1.4307 | 1 |
| 14 | 4177815 | SHAFT D.16X292,5 1.4301 VP. | 1 |
| 15 | 4217897 | PUMP HOUSING HELIX DN32 PN16 1.4301 KIT | 1 |

| Item | Article no. | Description | Quantity |
|---|---|---|---|
| 7.3 | 4176513 | > O-RING FOR PUMP JACKET VP. | 1 |
| 15.1 | | > BLASTING PPE HOUSING V-PN16-DN32-5"-304 | 1 |
| 15.2 | 4217891 | > COUNTER FLANGE-G1"1/4-PN16-GJL KIT | 1 |
| 15.3 | 4171321 | > PRIMING/DRAIN PLUG EPDM HELIX KIT | 1 |
| 16 | 4177964 | BASEPLATE HELIX V2/4/6 PN16 VP. | 1 |

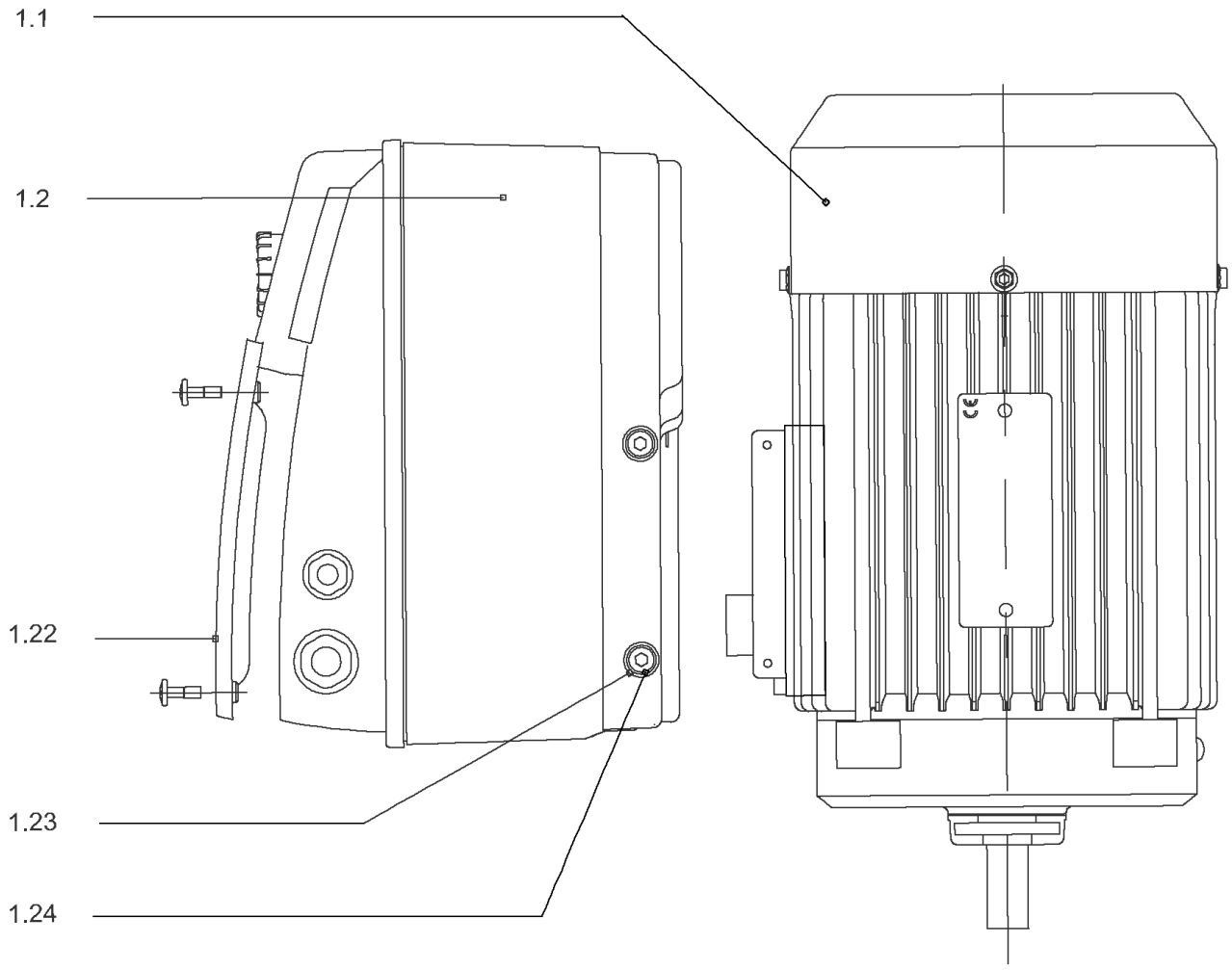
1.1
1.2
1.22
1.23
1.24

## DRIVE HELIX-VE603-IE2-WE KIT

| Item | Article no. | Description | Quantity |
|---|---|---|---|
| 1.1 | 4184817 | MOTOR 1,1/2/80 3~ 380V 60HZ IE2 WE VP. | 1 |
| | | SPARE PARTS MOTOR:ON REQUEST | 1 |
| 1.2 | 4186766 | MODULE HELIX-VE603-IE2-WE KIT | 1 |
| 1.22 | 2054372 | > MODULE COVER TL1,TL2+GASKET KIT | 1 |
| 1.23 | 4215716 | > SCREW M5X16 DIN912 8.8 A2A (4pieces) VP. | 1 |
| 1.24 | 2057978 | > RONDELLE A5,3 DIN6797 FST ZN (4 PIECES) | 1 |

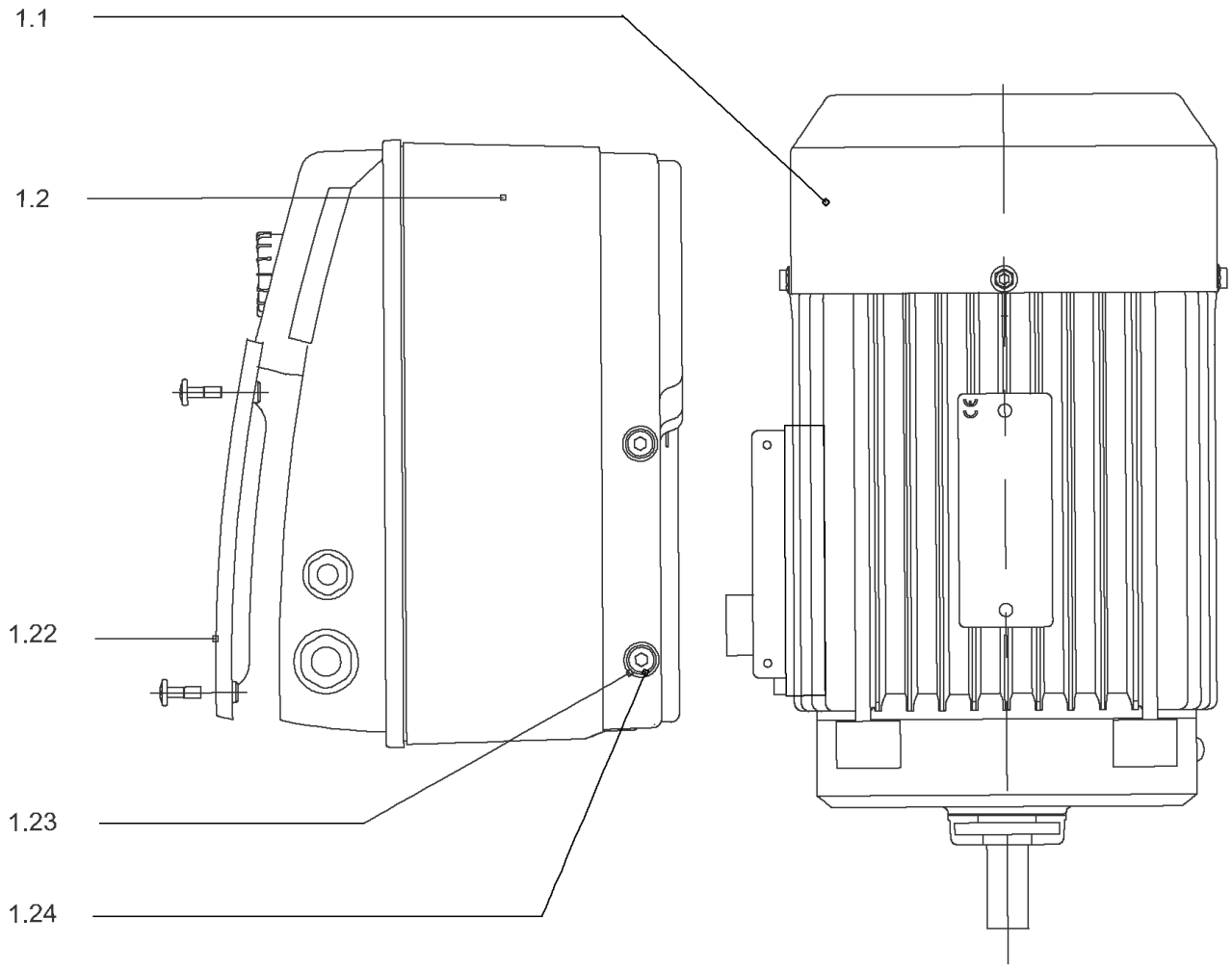
1.1
1.2
1.22
1.23
1.24

## DRIVE HELIX-VE603-IE4-WE KIT

| Item | Article no. | Description | Quantity |
|---|---|---|---|
| 1.1 | 4207916 | MOTOR 1.1/2/80 3~ 380V 60HZ IE4 WE VP. | 1 |
| | | SPARE PARTS MOTOR:ON REQUEST | 1 |
| 1.2 | 4209599 | MODULE HELIX-VE603-IE4-WE KIT | 1 |
| 1.22 | 2054372 | > MODULE COVER TL1,TL2+GASKET KIT | 1 |
| 1.23 | 4215716 | > SCREW M5X16 DIN912 8.8 A2A (4pieces) VP. | 1 |
| 1.24 | 2057978 | > RONDELLE A5,3 DIN6797 FST ZN (4 PIECES) | 1 |

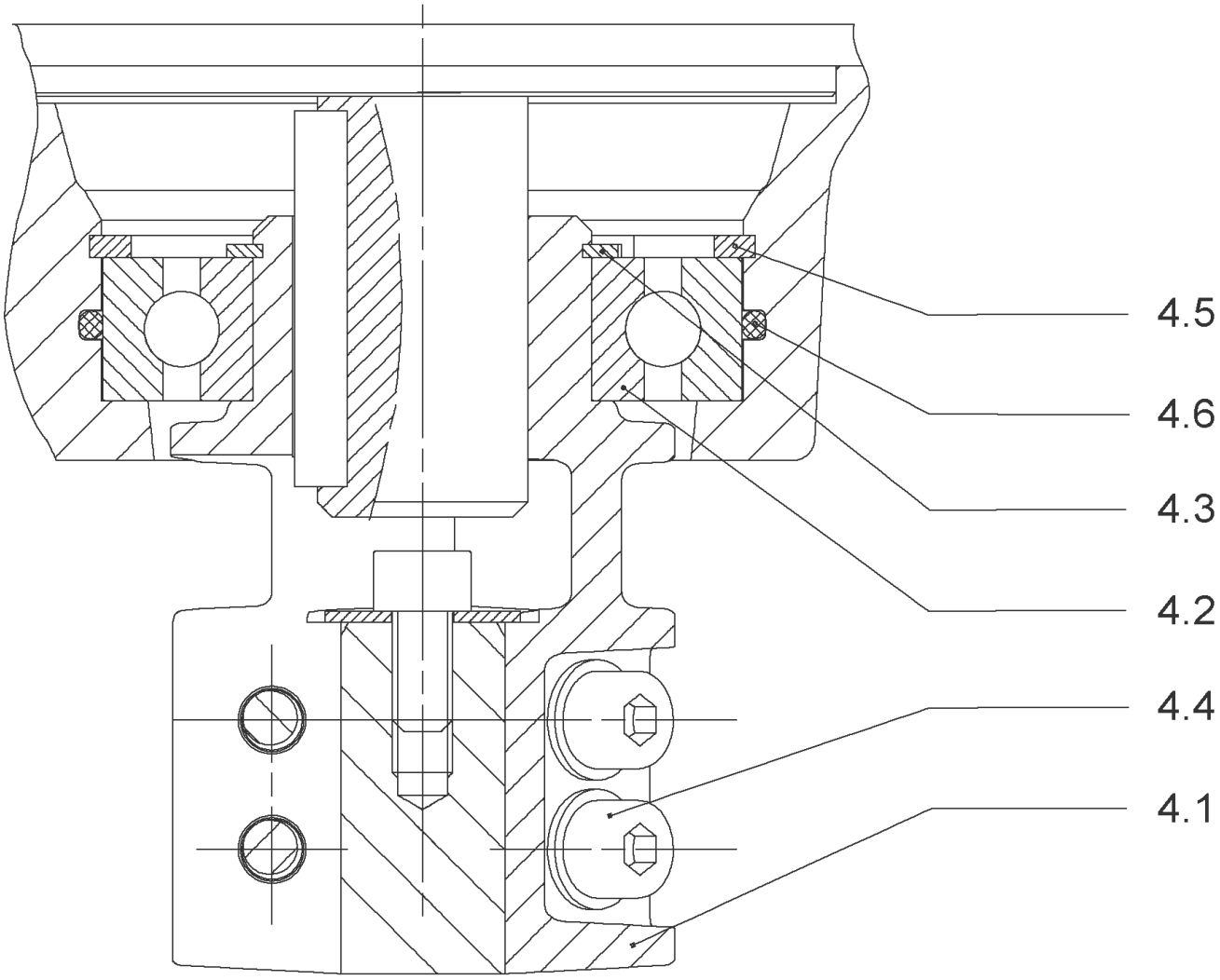
4.5
4.6
4.3
4.2
4.4
4.1

## COUPLING D.16XD.19 FT100 HELIX KIT (4159708)

| Item | Article no. | Description | Quantity |
|---|---|---|---|
| 4.1 | | COUPLING M+ Ø16XØ19 FT100 MACHINED | 1 |
| 4.2 | 2130977 | BALL BEARING 6206/ZZ-C3(HT)VP. | 1 |
| 4.3 | 4234249 | CIRCLIP-FOR-SHAFT-D30x1.5 VP. | 1 |
| 4.4 | 4212716 | SCREW M6X20 KIT (4PIECES) | 1 |
| 4.5 | 4234250 | CIRCLIP-D62x2 VP. | 1 |
| 4.6 | 4234245 | O-RING 63X3 VP. | 1 |
| | | CONTACT-WASHER-6ETR-6,1x12,2x1,8-STEEL | 1 |

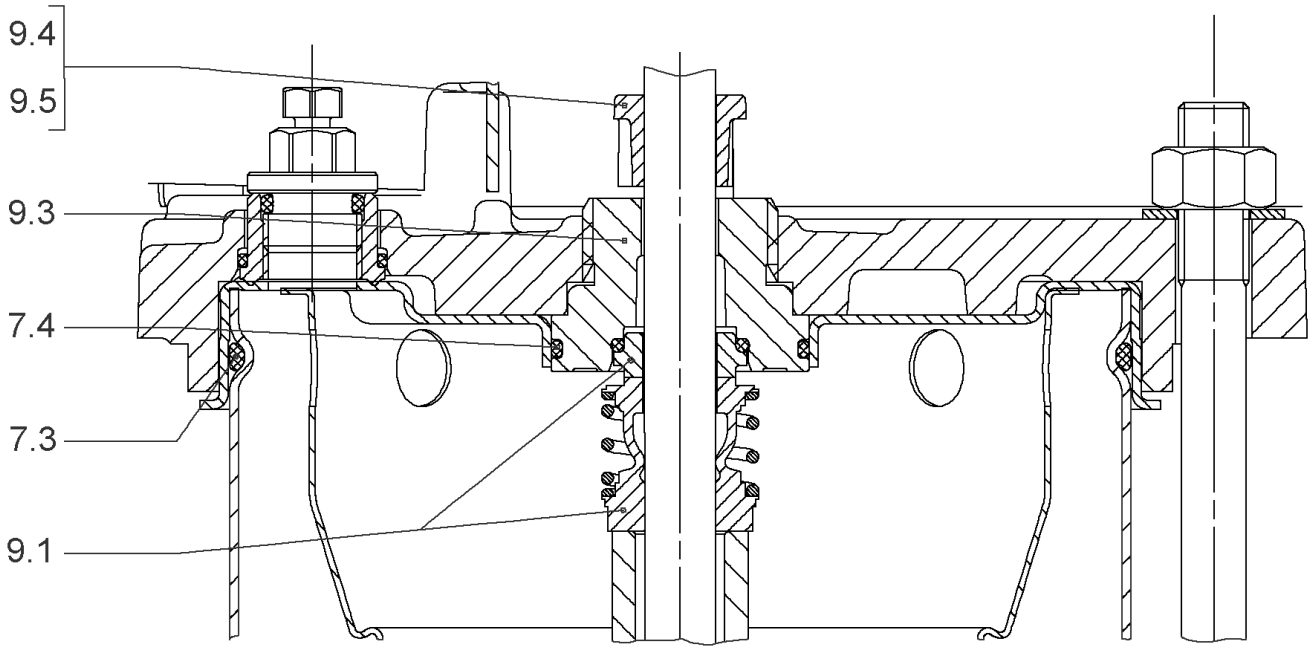
9.4
9.5
9.3
7.4
7.3
9.1

## SEAL-KIT-HELIX6-10-16 O/E KIT (4171327)

| Item | Article no. | Description | Quantity |
|---|---|---|---|
| 7.3 | 4176513 | O-RING FOR PUMP JACKET VP. | 1 |
| 7.4 | 2127603 | O-RING ID.37,6x2,4 EPDM VP. | 1 |
| 9.1 | 4177801 | MECH.SEAL HELIX6-10-16 O/E VP. | 1 |
| 9.3 | 4177798 | MACHINED RING HOLDER M+6" Ø16 304 VP. | 1 |
| 9.5 | 4177799 | MACHINED DRIVE RING Ø16 VP. | 1 |
| 9.4 | 4176520 | SCREW CH M5x5 A4-70 ( 3PIECES ) | 1 |

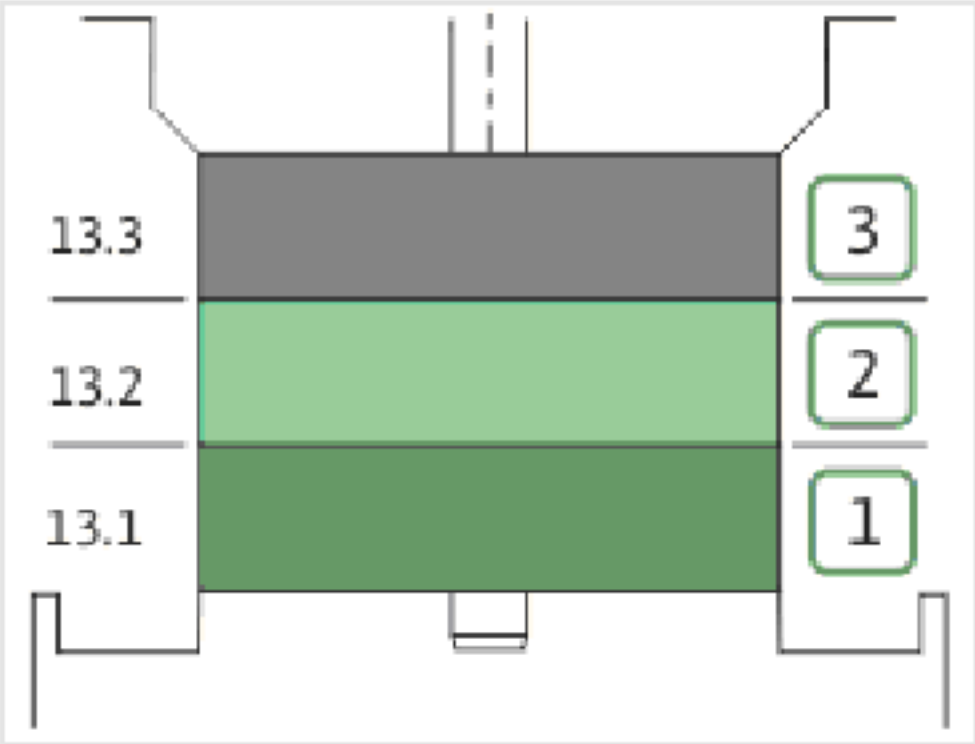
13.3
13.2
13.1
3
2
1

| Item | Article no. | Description | Quantity |
|---|---|---|---|
| 13.1 | 4174084 | STAGE HELIX 6 1.4301 KIT | 1 |
| | | > MACH.STG-CASING-WOGV-WNR-M+6-304 | 1 |
| | | > IMPELLER-M+6-304 | 1 |
| 13.2 | 4174089 | INTERMEDIATE STAGE HELIX 6 1.4301 KIT | 1 |
| | | > MACH.BEARING-STG-CASING-WNR-M+6-304 | 1 |
| | | > IMPELLER-M+6-304 | 1 |
| | | > SHAFT SLEEVE-SPACER-Ø19,35x18,465-304 | 1 |
| | | > SHAFT-SLEEVE-D16xD20x18-CW | 1 |
| 13.3 | 4174090 | INTERMEDIATE STAGE HELIX 6 1.4301 KIT | 1 |
| | | > MACH.STD-STG-CASING-WGV+NR-M+6-304 | 1 |
| | | > IMPELLER-M+6-304 | 1 |
| | | > IMPELLER SPACER Ø16,05X19,45-L36,465-304 | 1 |

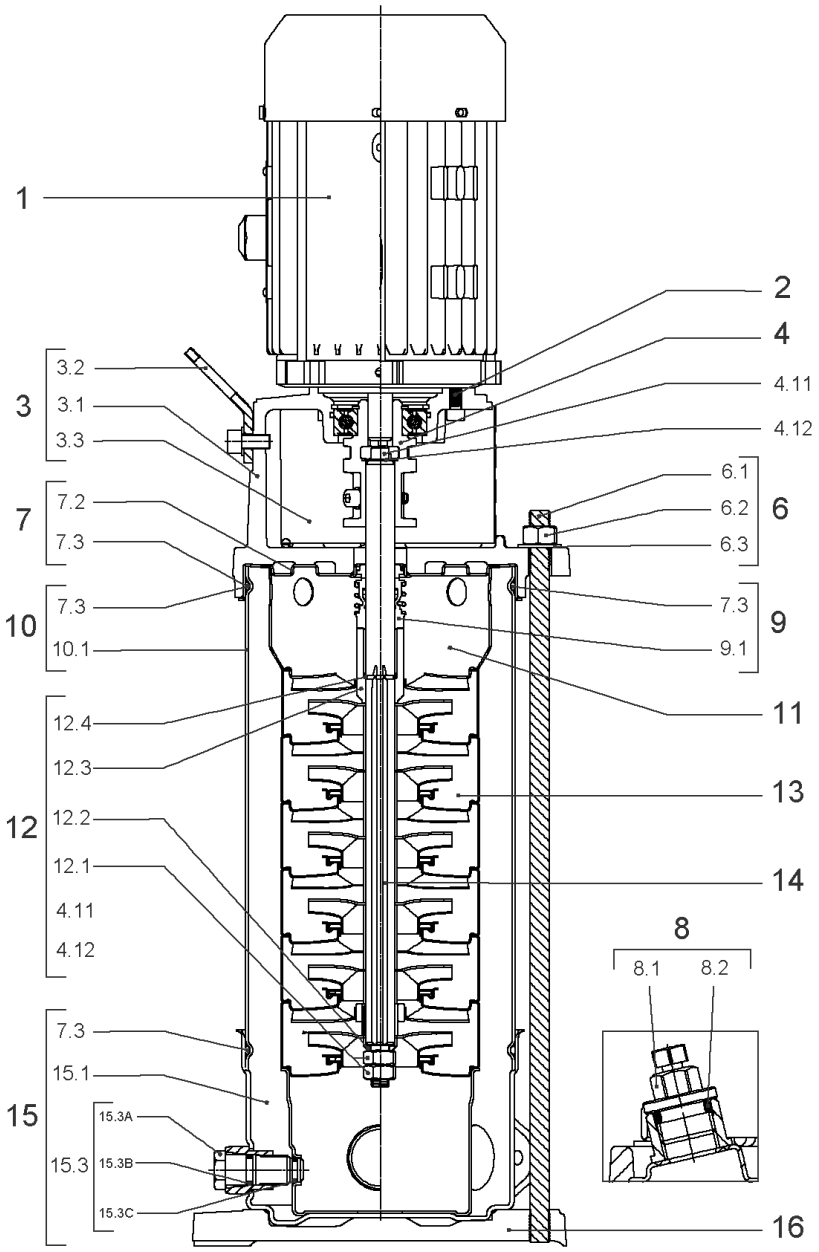
1
2
4
4.11
4.12
3
3.2
3.1
3.3
7
7.2
7.3
6
6.1
6.2
6.3
10
7.3
10.1
9
7.3
9.1
11
12
12.4
12.3
12.2
12.1
4.11
4.12
13
14
8
8.1
8.2
15
7.3
15.1
15.3
15.3A
15.3B
15.3C
16

## HELIX VE603-1/16/E/S (4201579)

| Item | Article no. | Description | Quantity |
|---|---|---|---|
| 1 | | DRIVE HELIX-VE603-IE4-WE KIT | 1 |
| Note: MOTOR BRAND WILO ELEC | | | |
| | | SPARE PARTS MOTOR:ON REQUEST | 1 |
| 2 | 4212716 | SCREW M6X20 KIT (4PIECES) | 1 |
| 3 | 4213752 | LANTERN FT100 HELIX KIT | 1 |
| 3.1 | | > LANT-MOT-VMI-ReDTC6"-FT100-MACHINED+CATA | 1 |
| 3.2 | 4184852 | > EYELET CPL.FT HELIX (2 PIECES) | 1 |
| 3.3 | 4213713 | > COUPLING PROTECTOR FT85/100 HELIX KIT | 1 |
| 4 | 4159708 | COUPLING D.16XD.19 FT100 HELIX KIT | 1 |
| 6 | 4177812 | STUD BOLT M12X300KIT | 1 |
| 6.1 | | > TIE BOLT M12-300x18x30-1.4057 | 1 |
| 6.2 | 2094647 | > NUT M12 M12 ISO4032 VP. | 1 |
| 6.3 | 2123557 | > WASHER CS-12.4-24-1.6-NFE25 (4 PIECES) | 1 |
| 7 | 4214481 | STATIONARY RING HOLDER HELIX D27 ReDTC | 1 |
| 7.2 | 4214479 | > STATIONARY RING HOLDER HELIX D27 VP. | 1 |
| 7.3 | 4176513 | > O-RING FOR PUMP JACKET VP. | 1 |
| 8 | 4212724 | FILING/PURGING PLUG HELIX ReDTC KIT | 1 |
| 8.1 | | > FILLING PLUG MVI6"-304 | 1 |
| 8.2 | 4177800 | > O-RING EPDM PLUG HELIX VP. | 1 |
| 9 | 4214483 | MECH.SEAL HELIX6-10-16 O/E ReDTC KIT | 1 |
| 9.1 | 4177801 | > MECH.SEAL HELIX6-10-16 O/E VP. | 1 |
| 7.3 | 4176513 | > O-RING FOR PUMP JACKET VP. | 1 |
| 10 | 4177813 | HOUSING PIPE D.152x172 1.4301 KIT | 1 |
| 7.3 | 4176513 | > O-RING FOR PUMP JACKET VP. | 1 |
| 10.1 | | > HOUSING-PIPE Ø152-M+1003-304 | 1 |
| 11 | 4174087 | CENTERING STAGE-RETURN HELIX6 1.4301VP. | 1 |
| 12 | 4214486 | SHAFT EQUIPMENT HELIX V6 ReDTC KIT | 1 |
| 12.1 | | > NUT-H-M10-A4.70 | 1 |
| 12.2 | | > SERRATED LOCK WASHER M+6M3-316L | 1 |
| 12.3 | | > 1/2-SNAP-RING-6/10M3-316L | 1 |
| 12.4 | | > STOP-RUSH-1/2-D16xd2-M+316 | 1 |
| 4.11 | | > SCREW CHC-M6X14-8.8-ISO4762-GEOMET500A | 1 |
| 4.12 | | > WASHER D.24 L6U ZINK | 1 |
| 13 | | HYDRAULIC HELIX V 603 1.4307 | 1 |

| Item | Article no. | Description | Quantity |
|---|---|---|---|
| 14 | 4214493 | SHAFT D.16X241 HELIX 1.4057 VP. | 1 |
| 15 | 4217897 | PUMP HOUSING HELIX DN32 PN16 1.4301 KIT | 1 |
| 7.3 | 4176513 | > O-RING FOR PUMP JACKET VP. | 1 |
| 15.1 | | > BLASTING PPE HOUSING V-PN16-DN32-5"-304 | 1 |
| 15.2 | 4217891 | > COUNTER FLANGE-G1"1/4-PN16-GJL KIT | 1 |
| 15.3 | 4171321 | > PRIMING/DRAIN PLUG EPDM HELIX KIT | 1 |
| 16 | 4177964 | BASEPLATE HELIX V2/4/6 PN16 VP. | 1 |

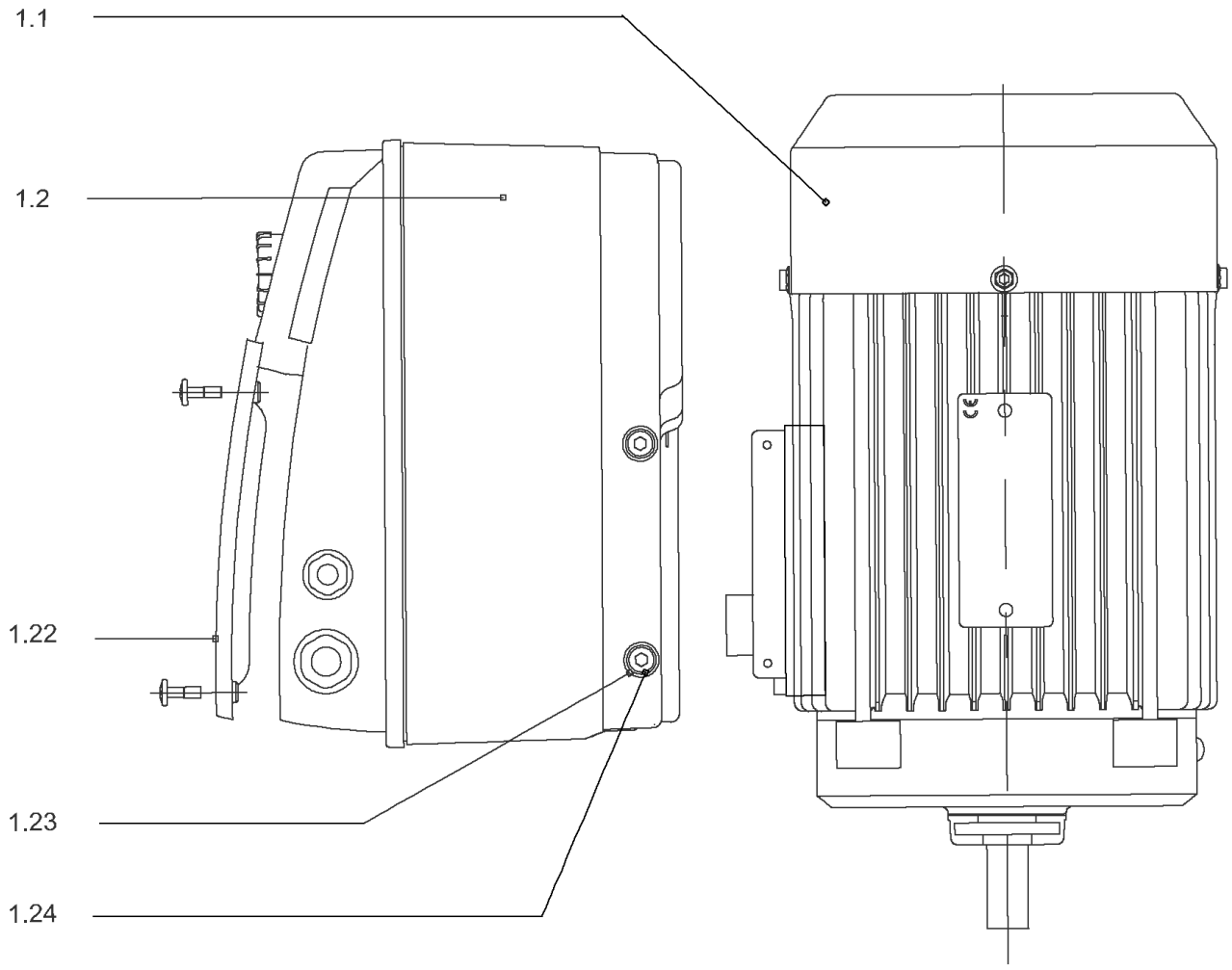
1.1
1.2
1.22
1.23
1.24

## DRIVE HELIX-VE603-IE4-WE KIT

| Item | Article no. | Description | Quantity |
|---|---|---|---|
| 1.1 | 4207916 | MOTOR 1.1/2/80 3~ 380V 60HZ IE4 WE VP. | 1 |
| | | SPARE PARTS MOTOR:ON REQUEST | 1 |
| 1.2 | 4209599 | MODULE HELIX-VE603-IE4-WE KIT | 1 |
| 1.22 | 2054372 | > MODULE COVER TL1,TL2+GASKET KIT | 1 |
| 1.23 | 4215716 | > SCREW M5X16 DIN912 8.8 A2A (4pieces) VP. | 1 |
| 1.24 | 2057978 | > RONDELLE A5,3 DIN6797 FST ZN (4 PIECES) | 1 |

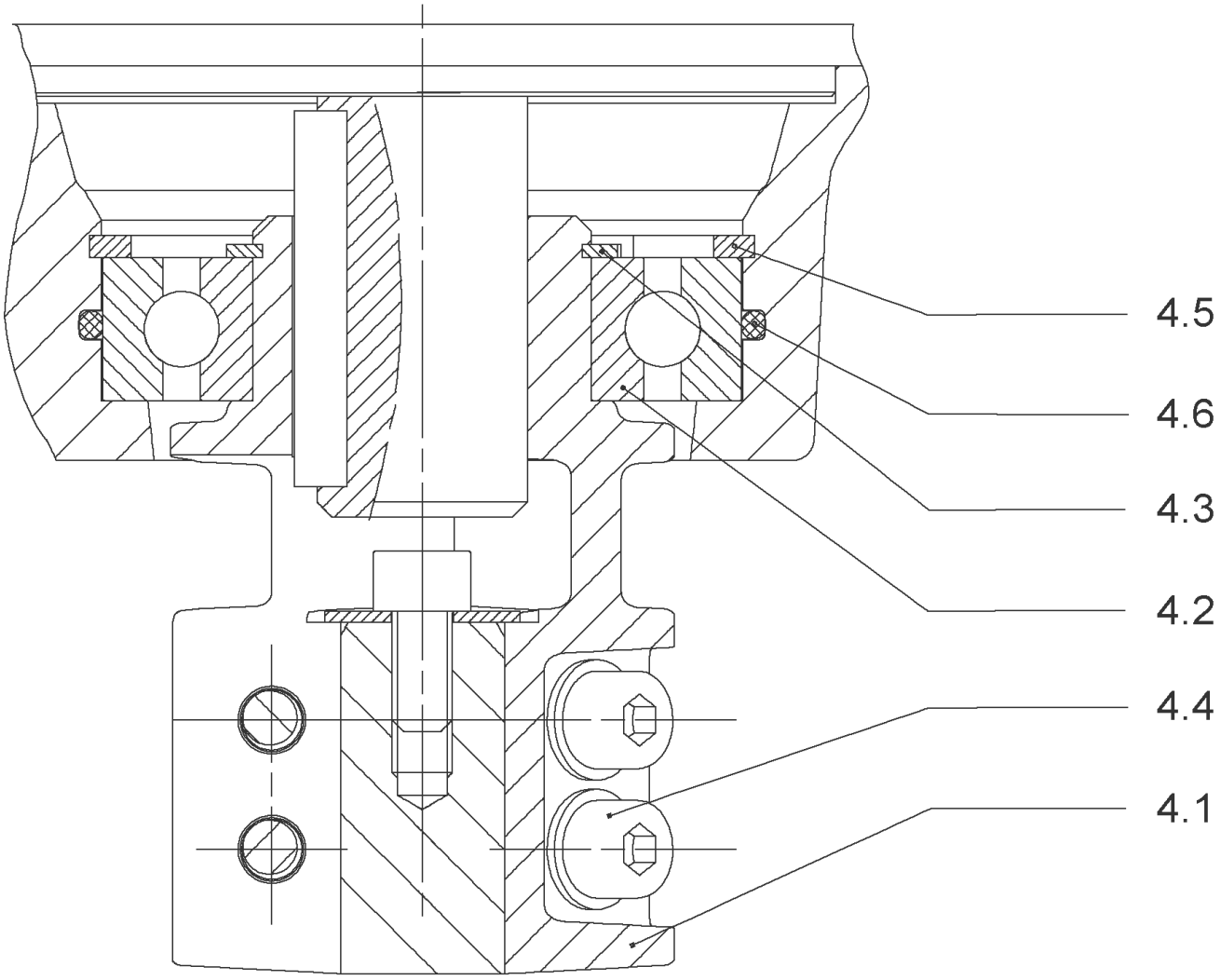
4.5
4.6
4.3
4.2
4.4
4.1

## COUPLING D.16XD.19 FT100 HELIX KIT (4159708)

| Item | Article no. | Description | Quantity |
|---|---|---|---|
| 4.1 | | COUPLING M+ Ø16XØ19 FT100 MACHINED | 1 |
| 4.2 | 2130977 | BALL BEARING 6206/ZZ-C3(HT)VP. | 1 |
| 4.3 | 4234249 | CIRCLIP-FOR-SHAFT-D30x1.5 VP. | 1 |
| 4.4 | 4212716 | SCREW M6X20 KIT (4PIECES) | 1 |
| 4.5 | 4234250 | CIRCLIP-D62x2 VP. | 1 |
| 4.6 | 4234245 | O-RING 63X3 VP. | 1 |
| | | CONTACT-WASHER-6ETR-6,1x12,2x1,8-STEEL | 1 |

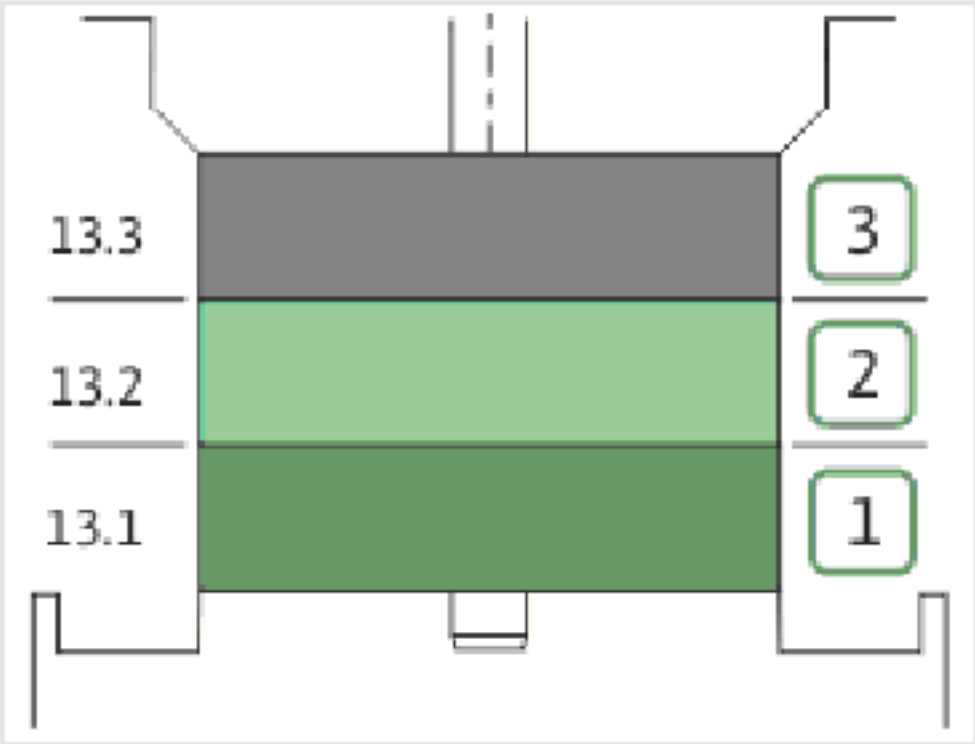
13.3
13.2
13.1
3
2
1

| Item | Article no. | Description | Quantity |
|---|---|---|---|
| 13.1 | 4174084 | STAGE HELIX 6 1.4301 KIT | 1 |
| | | > MACH.STG-CASING-WOGV-WNR-M+6-304 | 1 |
| | | > IMPELLER-M+6-304 | 1 |
| 13.2 | 4174089 | INTERMEDIATE STAGE HELIX 6 1.4301 KIT | 1 |
| | | > MACH.BEARING-STG-CASING-WNR-M+6-304 | 1 |
| | | > IMPELLER-M+6-304 | 1 |
| | | > SHAFT SLEEVE-SPACER-Ø19,35x18,465-304 | 1 |
| | | > SHAFT-SLEEVE-D16xD20x18-CW | 1 |
| 13.3 | 4174090 | INTERMEDIATE STAGE HELIX 6 1.4301 KIT | 1 |
| | | > MACH.STD-STG-CASING-WGV+NR-M+6-304 | 1 |
| | | > IMPELLER-M+6-304 | 1 |
| | | > IMPELLER SPACER Ø16,05X19,45-L36,465-304 | 1 |

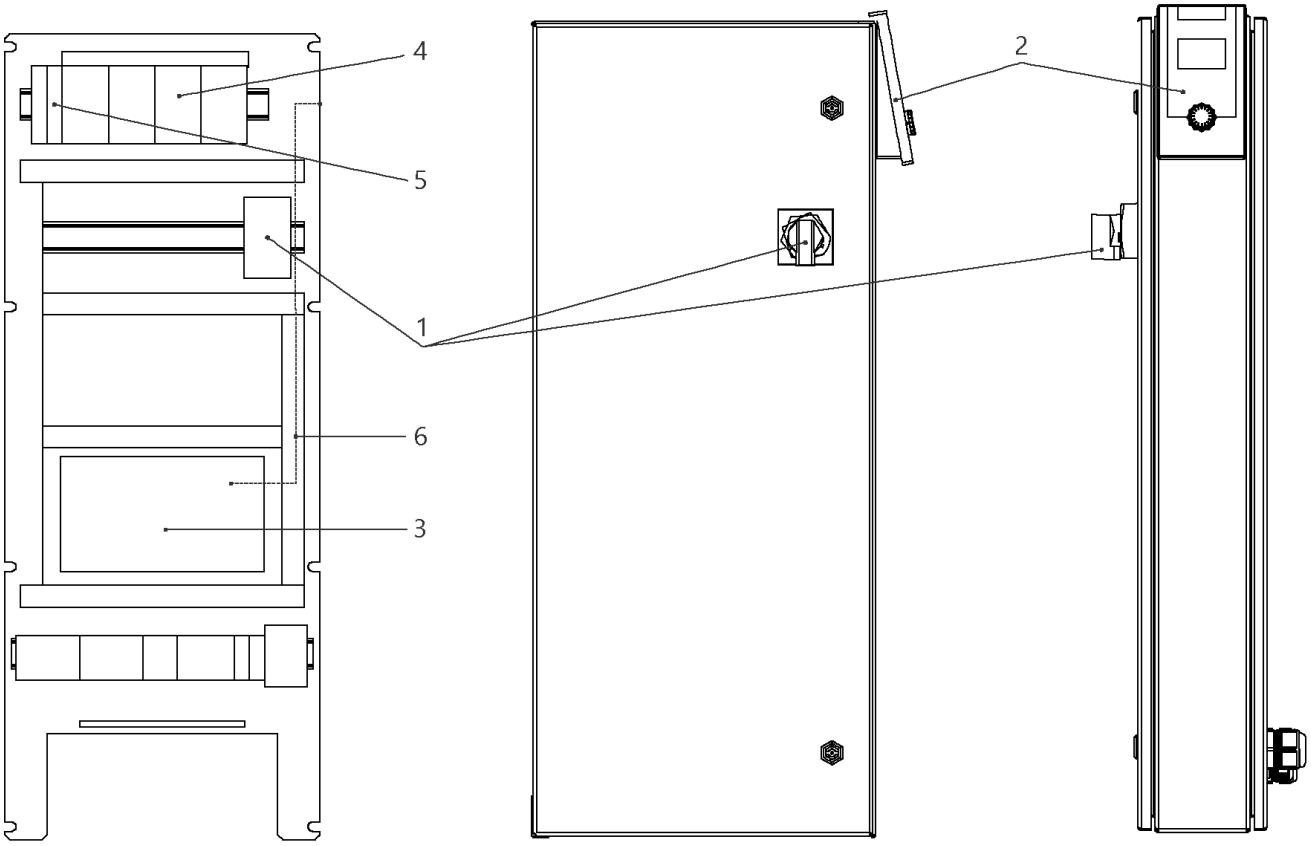
4
5
1
6
3
2

## W-CTRL-SCE-B-4x1,1KW-T4-FM-ND2

| Item | Article no. | Description | Quantity |
|---|---|---|---|
| 1 | 2104470 | MAIN SWITCH OT40F3 L250 KIT | 1 |
| 2 | 4184784 | CONTROL PANEL HMI SC KIT | 1 |
| 2 | 4185259 | ASSEMBLY DISPLAY SC PKG VP. | 1 |
| 3 | 4185257 | ASSEMBLY CPU SCe Booster VP. | 1 |
| 4 | 2051217 | AUTOM.CIRCUIT BREAKER S203 B16 TO7,5kW | 1 |
| 5 | 2046288 | CIRCUIT BREAKER S201 B16 | 1 |
| 6 | 4194956 | PATCH CABLE RJ45 CAT6 1,0M BLUE SC-PANEL | 1 |

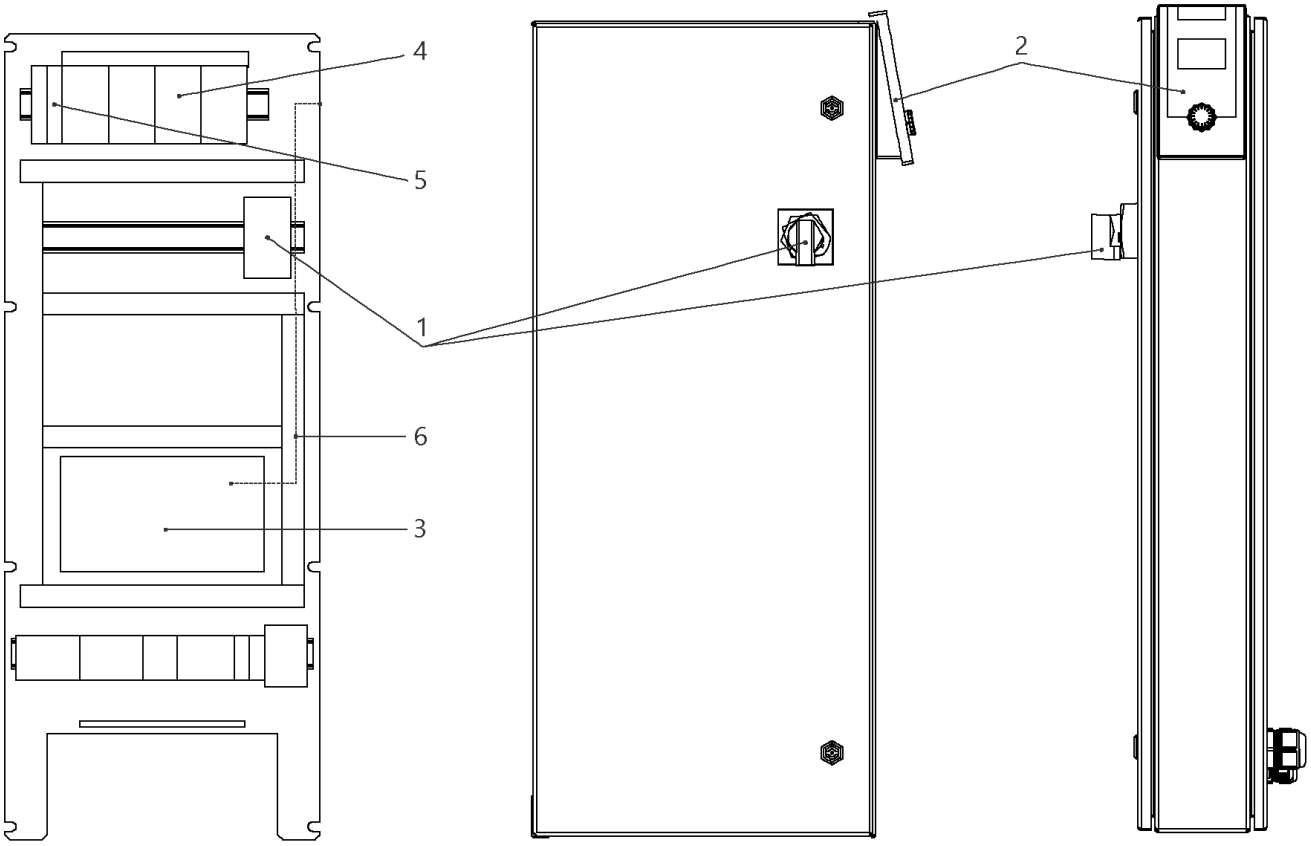
4
5
1
6
3
2

## W-CTRL-SCE-B-4x0,55-1,5KW-T4-FM-ND1

| Item | Article no. | Description | Quantity |
|---|---|---|---|
| 1 | 2104470 | MAIN SWITCH OT40F3 L250 KIT | 1 |
| 2 | 4184784 | CONTROL PANEL HMI SC KIT | 1 |
| 2 | 4185259 | ASSEMBLY DISPLAY SC PKG VP. | 1 |
| 3 | 4185257 | ASSEMBLY CPU SCe Booster VP. | 1 |
| 4 | 2051217 | AUTOM.CIRCUIT BREAKER S203 B16 TO7,5kW | 1 |
| 5 | 2046288 | CIRCUIT BREAKER S201 B16 | 1 |
| 6 | 4197081 | CABLE RJ45 CAT6 0,5M RED SC-PANEL VP. | 1 |

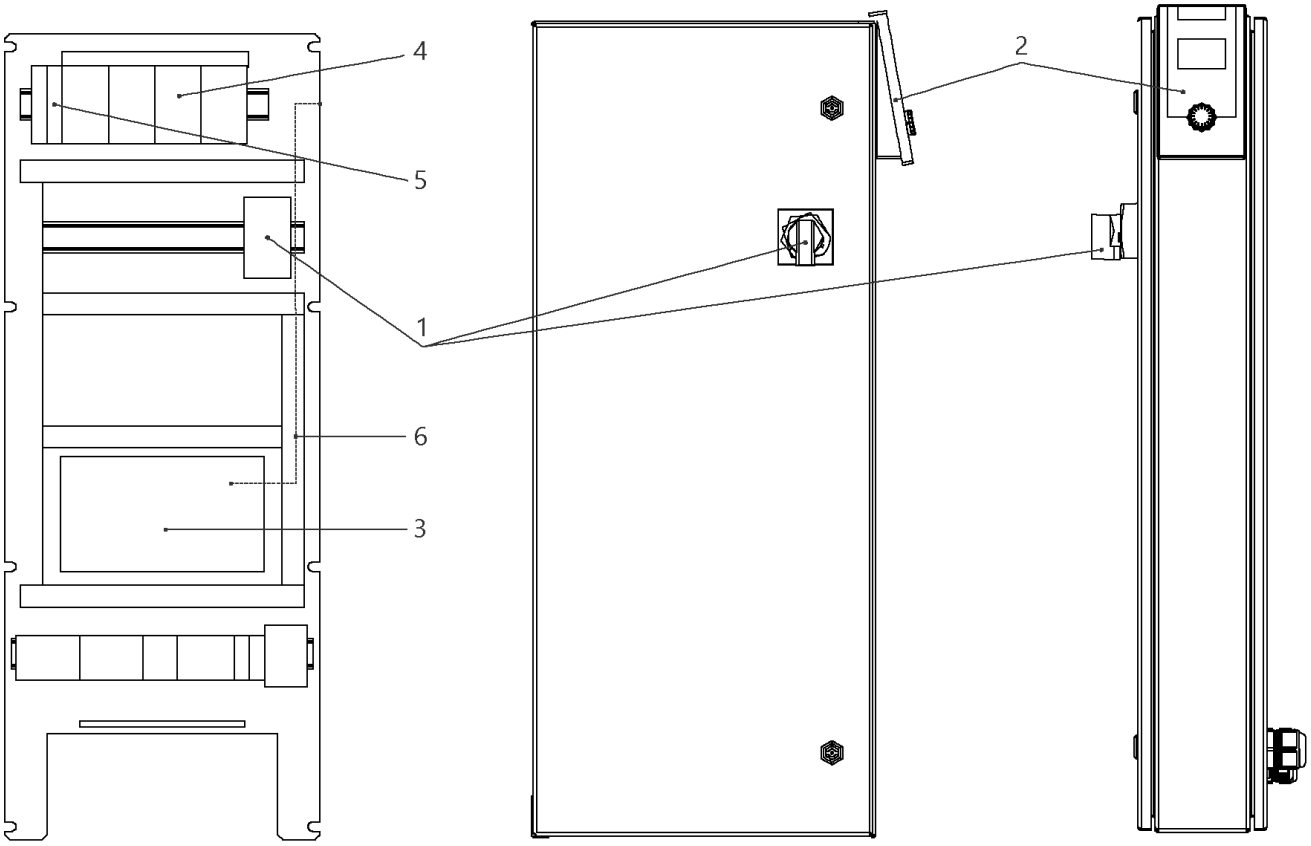
4
5
1
6
3
2

## W-CTRL-SCE-B-4x10A-T34-FM-ND1-AVC-PKG (2541915)

| Item | Article no. | Description | Quantity |
|---|---|---|---|
| 1 | 2104473 | MAIN SWITCH OT63F3 L105 KIT | 1 |
| 2 | 4184784 | CONTROL PANEL HMI SC KIT | 1 |
| 2 | 4185259 | ASSEMBLY DISPLAY SC PKG VP. | 1 |
| Note: DISPLAY ALONE / PLATINE SEULE | | | |
| 3 | 4185257 | ASSEMBLY CPU SCe Booster VP. | 1 |
| 5 | 2046288 | CIRCUIT BREAKER S201 B16 | 1 |
| 4 | 2119861 | AUTOMATIC CIRCUIT BREAKER S203 B13 3POL. | 1 |
| 6 | 4197081 | CABLE RJ45 CAT6 0,5M RED SC-PANEL VP. | 1 |

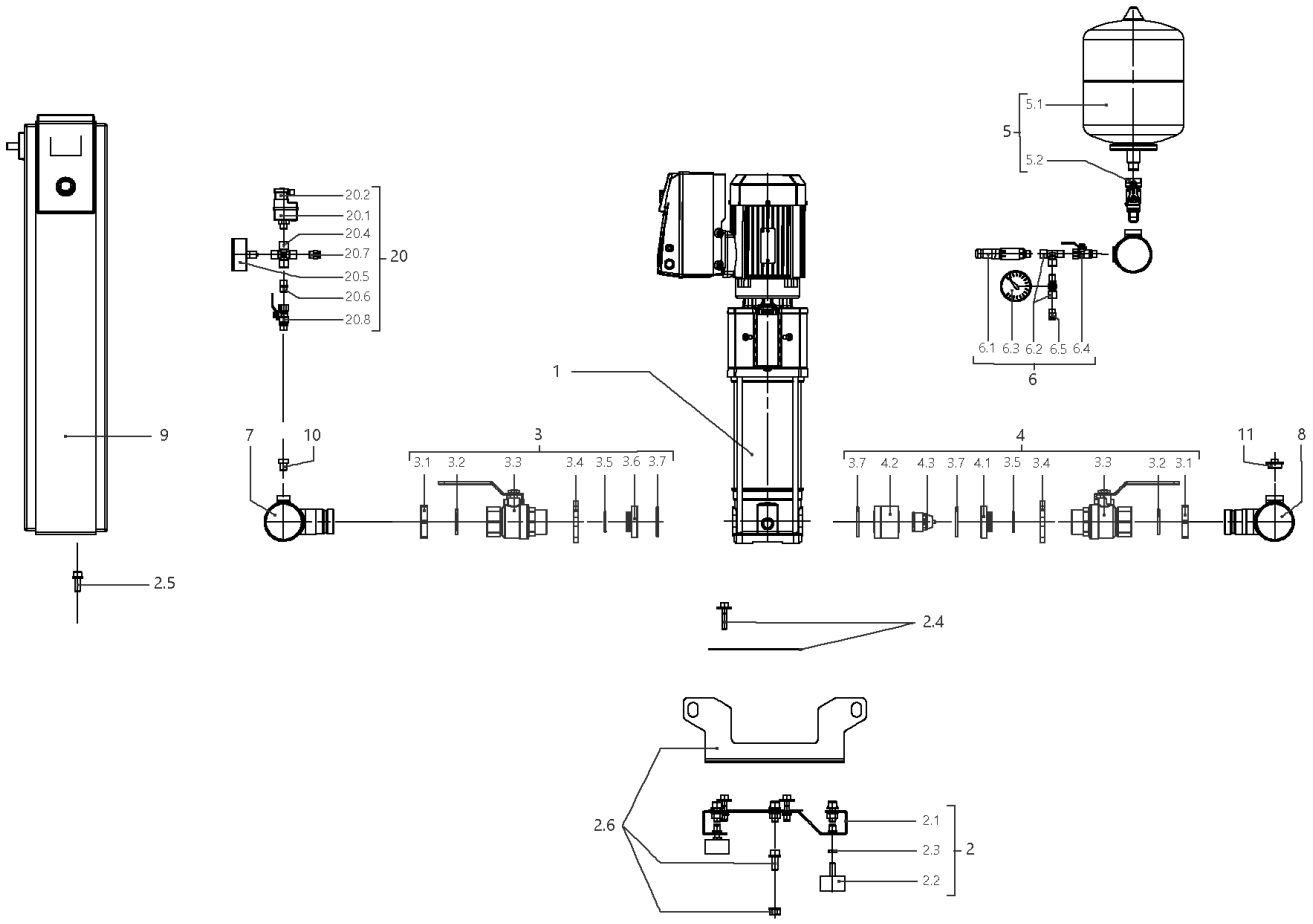
5.1
5
5.2
20.2
20.1
20.4
20.7
20
20.5
20.6
20.8
6.1 6.3 6.2 6.5 6.4
6
1
9
7
10
3
3.1 3.2 3.3 3.4 3.5 3.6 3.7
4
3.7 4.2 4.3 3.7 4.1 3.5 3.4 3.3 3.2 3.1
11
8
2.5
2.4
2.6
2.1
2.3
2
2.2

## SiBoost Smart 4HELIX VE604 (2537349)

| Item | Article no. | Description | Quantity |
|---|---|---|---|
| 1 | | HELIX VE604-1/16/E/S | 1 |
| Note: TO / BIS / JUSQU'AU 31/03/2016 | | | |
| 1 | 4201581 | HELIX VE604-1/16/E/S | 1 |
| Note: FROM / AB / À PARTIR DU 01/04/2016 | | | |
| 2 | 4200143 | BASE PLATE DE4 1450x300 KIT | 1 |
| 2.1 | | > BASEPLATE_4x4/6/10V_E300_1450x300BOX_150 | 1 |
| 2.2 | 2028654 | > VIBRATION DAMPER D.50X30 M10X28 | 1 |
| 2.3 | 2028281 | > NUT M10 DIN936 (ISO4035) 17H VZ | 1 |
| 2.4 | 4199875 | > HOLDER PUMP Siboost Helix V2/4 KIT | 1 |
| 2.5 | 4197084 | > HOLDER SWITCHBOX WILO Smart Control KIT | 1 |
| 2.6 | 4197085 | > LIFTING Siboost HELIX SC KIT | 1 |
| 3 | 4199876 | SUCTION SIDE Siboost Helix V2/4/6 KIT | 1 |
| 3.1 | 2032610 | > NUT G11/4 MS VP. | 1 |
| 3.2 | 2032611 | > O-RING ID.36,09X3,53N DIN3771 E7502 | 1 |
| 3.3 | 2507646 | > BALL VALVE G11/4"M-F-W.HANDLE 1/4-TURN | 1 |
| 3.4 | 2032613 | > SCREWED FLANGE G1 1/4" LK-75 ST37VZ | 1 |
| 3.5 | 2032614 | > O-RING ID.29,82X2,62N DIN3771 E7502 | 1 |
| 3.6 | 2032615 | > SPACER F.I/A KUH.DN32 CUZN | 1 |
| 3.7 | 2032616 | > O-RING ID.44X3,53N DIN3771 E7502 | 1 |
| 4 | 4199877 | DELIVERY SIDE Siboost Helix V2/4/6 KIT | 1 |
| 3.1 | 2032610 | > NUT G11/4 MS VP. | 1 |
| 3.2 | 2032611 | > O-RING ID.36,09X3,53N DIN3771 E7502 | 1 |
| 3.3 | 2507646 | > BALL VALVE G11/4"M-F-W.HANDLE 1/4-TURN | 1 |
| 3.4 | 2032613 | > SCREWED FLANGE G1 1/4" LK-75 ST37VZ | 1 |
| 3.5 | 2032614 | > O-RING ID.29,82X2,62N DIN3771 E7502 | 1 |
| 4.1 | 2058116 | > SPACER F.I/A KUH.DN32 CUZN | 1 |
| 3.7 | 2032616 | > O-RING ID.44X3,53N DIN3771 E7502 | 1 |
| 4.2 | 2058115 | > HOUSING RFV(RV-IN) DN32 SGS/DRS | 1 |
| 4.3 | 2027870 | > NON-RETURN-DEVICE INSERT DN32(MTR) | 1 |
| 5 | 2032642 | DIAPHREM TANK 8L/PN16 DIN4807/T5 KIT | 1 |
| 5.1 | 2045914 | > DIAPHREM TANK 8L TYP-DD 16BAR | 1 |
| 5.2 | 2027853 | > FLOW FITTING G3/4 FOR DIAPHRAGM VES. | 1 |
| 6 | 4197076 | PRESSURE SENSOR/ GAUGE 0-16BAR KIT | 1 |
| 6.1 | 2085909 | > PRESS.SENSOR 1/4" 0-16BAR 4-20MA VP. | 1 |

| Item | Article no. | Description | Quantity |
|---|---|---|---|
| 6.2 | 4197077 | > T-PIECE 1/4" VP. | 1 |
| 6.3 | 2028692 | > PRESSURE GAUGE NG63-PN16-G1/4 | 1 |
| 6.4 | 2028291 | > BALL TAP R1/4" PN42 GIACOMINI R254DL | 1 |
| 6.5 | 2028691 | > BLOWGUN 1/4" MS 30BAR VP. | 1 |
| 7 | 4200144 | PIPE DE4 21/2''-4x11/4"+2x1/4x900 VP. | 1 |
| 8 | 4200145 | PIPE DE4 21/2''-4x11/4"+2x1/4+1x3/4x900 | 1 |
| 9 | | W-CTRL-SCE-B-4x0,55-1,5KW-T4-FM-ND1 | 1 |
| Note: TO / BIS / JUSQU'AU 18/05/2014 | | | |
| 9 | 2541915 | W-CTRL-SCE-B-4x10A-T34-FM-ND1-AVC-PKG | 1 |
| Note: FROM / AB / À PARTIR DU 19/05/2014 | | | |
| 10 | 4197079 | PLUG G1/4"x10 AISI304 KIT | 1 |
| 11 | 2032654 | PLUG R3/4" MS VIEGA 1751 | 1 |
| 20 | | ASSEMBLY WMS. DE-EB. +VP | 1 |
| 20.1 | 2028652 | > PRESSURE SWITCH PS3-ASR 1/(1,3) VP. | 1 |
| 20.2 | 2130983 | > PLUG PS3-415 WITH KABEL 1,5M 2NO VP. | 1 |
| 20.4 | 2028290 | > CROSSPIECE R1/4" MS-NICKEL | 1 |
| 20.5 | 2028687 | > PRESSURE GAUGE NG63 R1/4" HI.0-6BAR | 1 |
| 20.6 | 2054268 | > DUAL NIPPLE G1/4" x G1/4" MS VP. | 1 |
| 20.7 | 2028691 | > BLOWGUN 1/4" MS 30BAR VP. | 1 |
| 20.8 | 2028291 | > BALL TAP R1/4" PN42 GIACOMINI R254DL | 1 |

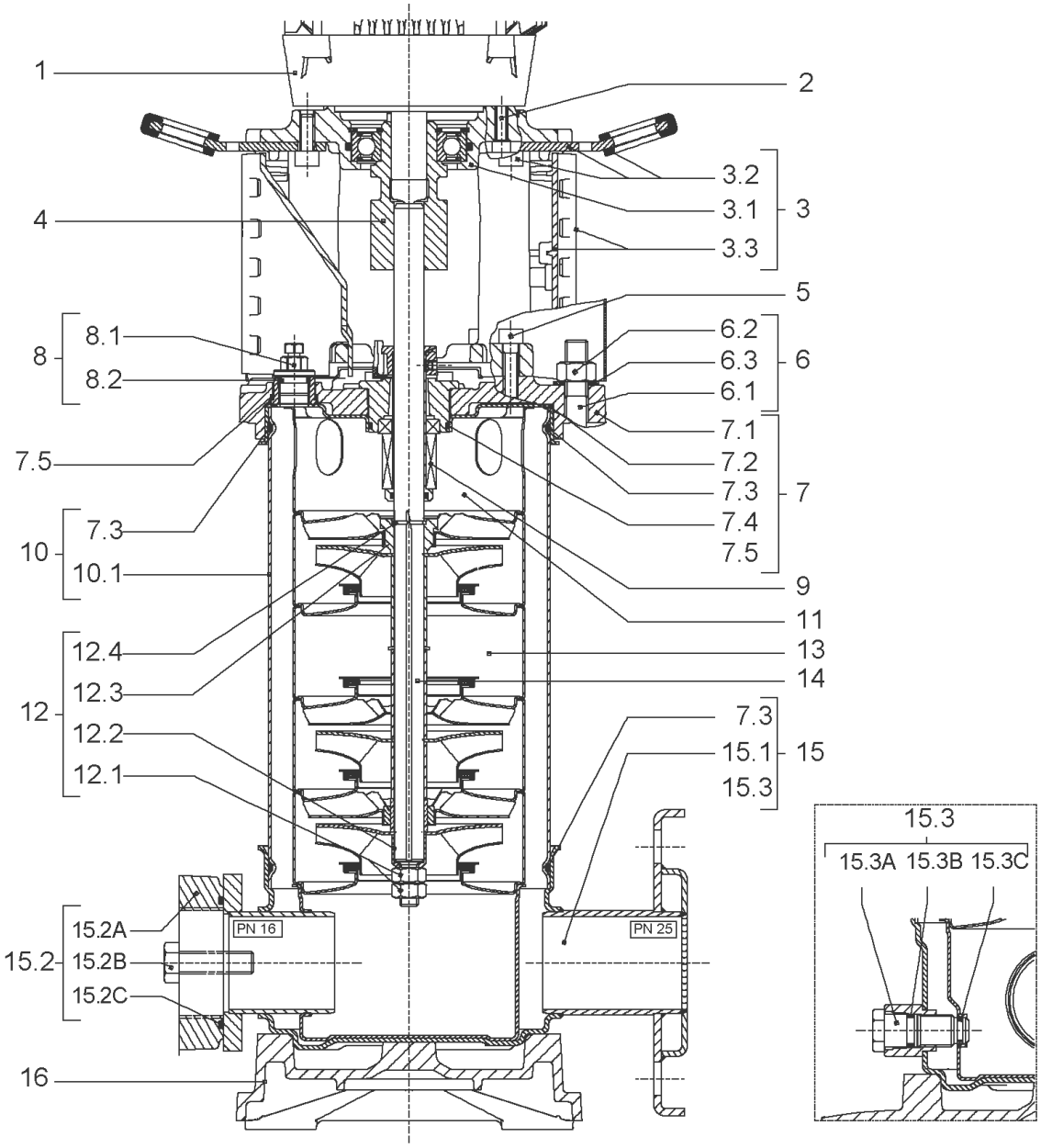
1
2
3.2
3.1
3
3.3
4
5
8.1
8
8.2
6.2
6.3
6
6.1
7.1
7.5
7.2
7.3
7
7.4
7.3
10
7.5
10.1
9
11
12.4
13
12.3
14
12
12.2
7.3
15.1
15
12.1
15.3
15.3
15.3A 15.3B 15.3C
15.2A
PN 16
PN 25
15.2
15.2B
15.2C
16

| Item | Article no. | Description | Quantity |
|---|---|---|---|
| 1 | | DRIVE HELIX-VE604IE2-WE KIT | 1 |
| Note: MOTOR BRAND WILO ELEC | | | |
| 1 | | DRIVE HELIX-VE604-IE4-WE KIT | 1 |
| Note: MOTOR BRAND WILO ELEC | | | |
| 2 | 4159703 | SCREW M8X40 (4 PIECES) | 1 |
| 3 | 4172795 | LANTERNE FT115 HELIX KIT | 1 |
| 3.1 | | > M+5_6_LANTERN_ONE-PIECE_FT115_CATA | 1 |
| 3.2 | 2127604 | > EYELET CPL.FT HELIX(2 PIECES) | 1 |
| 3.3 | 4159692 | > COUPLING PROTECTOR FT HELIX KIT | 1 |
| 4 | 4159709 | COUPLING D.16xD.24 FT115 HELIX KIT | 1 |
| 5 | 4159707 | SCREW M8X30 (4 PIECES) | 1 |
| 6 | 4177817 | STUD BOLT M12X341 KIT | 1 |
| 6.1 | | > TIE BOLT M12-341x18x30-1.4057 | 1 |
| 6.2 | 2094647 | > NUT M12 M12 ISO4032 VP. | 1 |
| 6.3 | 2123557 | > WASHER CS-12.4-24-1.6-NFE25 (4 PIECES) | 1 |
| 7 | 4210143 | STATIONARY RING HOLDER HELIX 6" EPDM | 1 |
| 7.2 | 2127607 | > STATIONARY RING HOLDER 6" HELIX 1.4301 V | 1 |
| 7.3 | 4176513 | > O-RING FOR PUMP JACKET VP. | 1 |
| 7.4 | 2127603 | > O-RING ID.37,6x2,4 EPDM VP. | 1 |
| 7.5 | 2127602 | > O-RING ID.21,35x2 EPDM VP. | 1 |
| 8 | 4159686 | FILING/PURGING PLUG HELIX EPDM KIT | 1 |
| 9 | 4171327 | SEAL-KIT-HELIX6-10-16 O/E KIT | 1 |
| 10 | 4177818 | HOUSING PIPES Ø152-M+1004-304 KIT | 1 |
| 7.3 | 4176513 | > O-RING FOR PUMP JACKET VP. | 1 |
| 10.1 | | > HOUSING-PIPE Ø152-M+1004/1603-304 | 1 |
| 11 | 4174087 | CENTERING STAGE-RETURN HELIX6 1.4301VP. | 1 |
| 12 | 4174086 | SHAFTS EQUIPMENT HELIX V6 MONOBLOC KIT | 1 |
| 12.1 | | > NUT-H-M10-A4.70 | 1 |
| 12.2 | | > SERRATED LOCK WASHER M+6M3-316L | 1 |
| 12.3 | | > IMPELLER STOP RING L33,2-304 | 1 |
| 12.4 | | > STOP-RUSH-1/2-D16xd2-M+316 | 1 |
| 13 | | HYDRAULIC HELIX V 604 1.4307 | 1 |
| 14 | 4177820 | SHAFTS Ø16X330 1. 4301 VP. | 1 |
| 15 | 4217897 | PUMP HOUSING HELIX DN32 PN16 1.4301 KIT | 1 |

| Item | Article no. | Description | Quantity |
|---|---|---|---|
| 7.3 | 4176513 | > O-RING FOR PUMP JACKET VP. | 1 |
| 15.1 | | > BLASTING PPE HOUSING V-PN16-DN32-5"-304 | 1 |
| 15.2 | 4217891 | > COUNTER FLANGE-G1"1/4-PN16-GJL KIT | 1 |
| 15.3 | 4171321 | > PRIMING/DRAIN PLUG EPDM HELIX KIT | 1 |
| 16 | 4177964 | BASEPLATE HELIX V2/4/6 PN16 VP. | 1 |

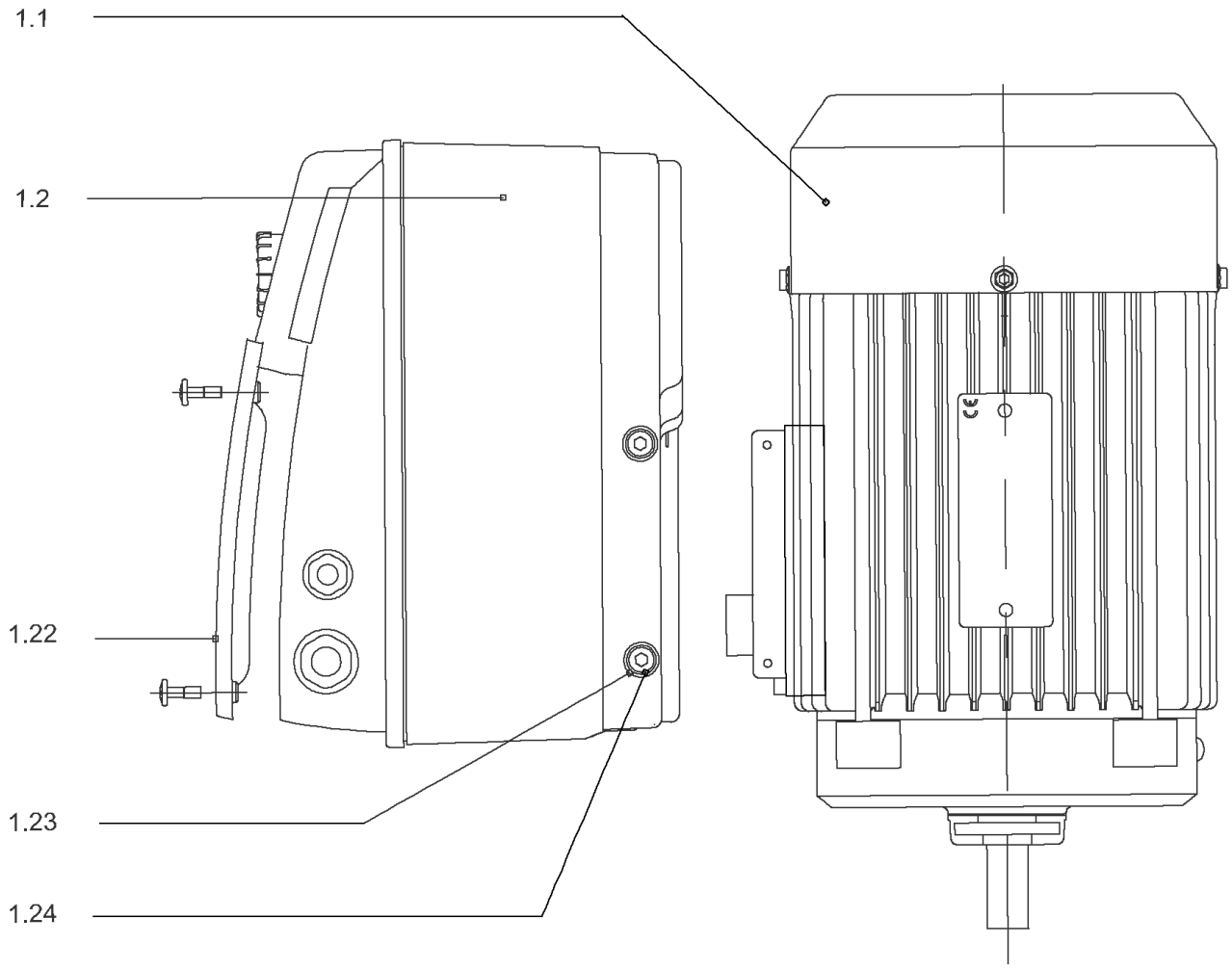
1.1
1.2
1.22
1.23
1.24

## DRIVE HELIX-VE604IE2-WE KIT

| Item | Article no. | Description | Quantity |
|---|---|---|---|
| 1.1 | | MOTOR 1,5/2/90 3~ 380V 60HZ IE2 WE VP. | 1 |
| Note: no longer available/nicht mehrlieferbar/n'est plus disponible | | | |
| | | SPARE PARTS MOTOR:ON REQUEST | 1 |
| 1.2 | 4190201 | MODULE HELIX-VE604-IE2-WE KIT | 1 |
| 1.22 | 2054227 | > MODULE COVER/GASKET TL3/4 KIT | 1 |
| 1.23 | 4215716 | > SCREW M5X16 DIN912 8.8 A2A (4pieces) VP. | 1 |
| 1.24 | 2057978 | > RONDELLE A5,3 DIN6797 FST ZN (4 PIECES) | 1 |

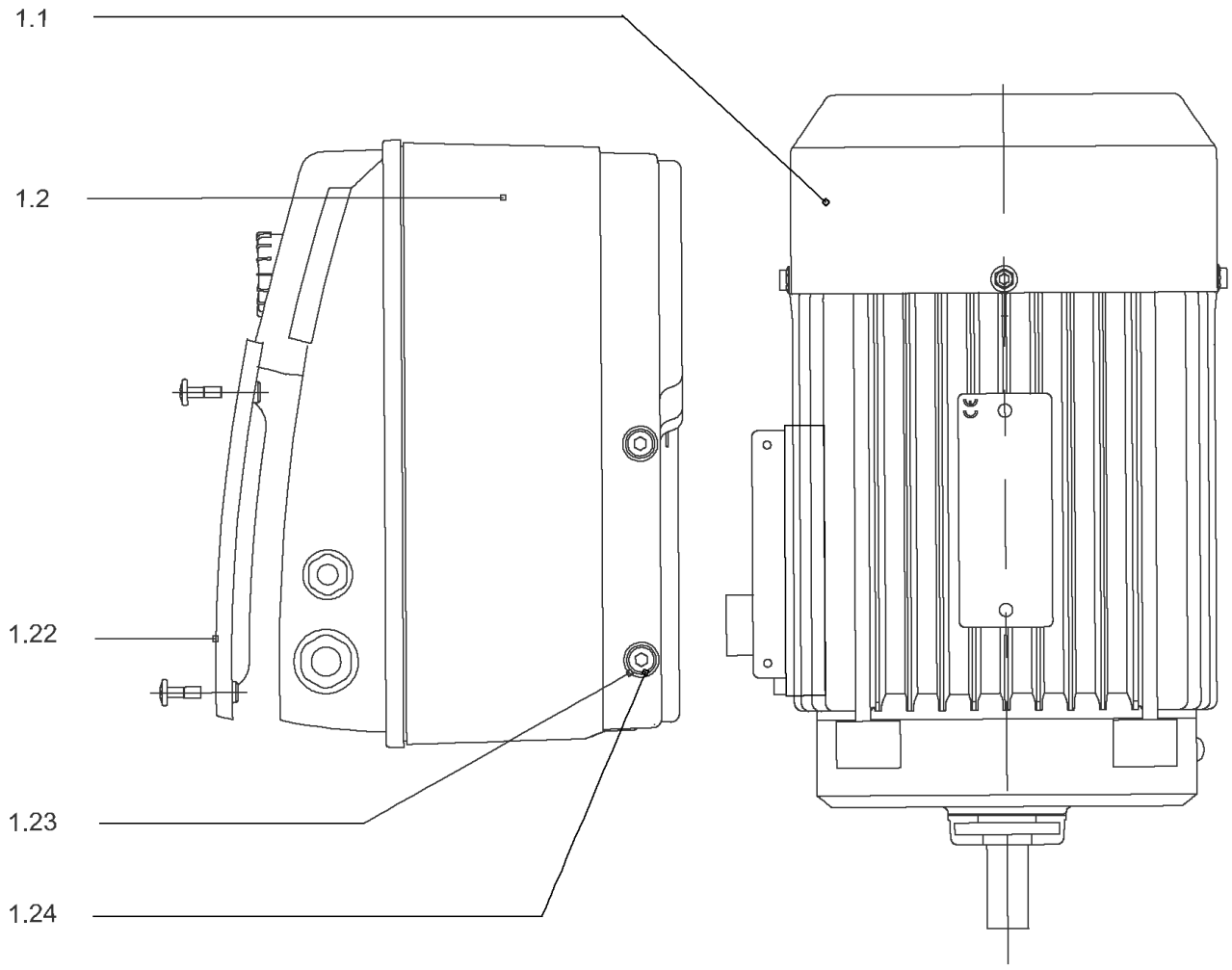
1.1
1.2
1.22
1.23
1.24

## DRIVE HELIX-VE604-IE4-WE KIT

| Item | Article no. | Description | Quantity |
|---|---|---|---|
| 1.1 | 4207918 | MOTOR 1.5/2/90 3~ 380V 60HZ IE4 WE VP. | 1 |
| | | SPARE PARTS MOTOR:ON REQUEST | 1 |
| 1.2 | 4209316 | MODULE HELIX-VE604-IE4-WE KIT | 1 |
| 1.22 | 2054227 | > MODULE COVER/GASKET TL3/4 KIT | 1 |
| 1.23 | 4215716 | > SCREW M5X16 DIN912 8.8 A2A (4pieces) VP. | 1 |
| 1.24 | 2057978 | > RONDELLE A5,3 DIN6797 FST ZN (4 PIECES) | 1 |

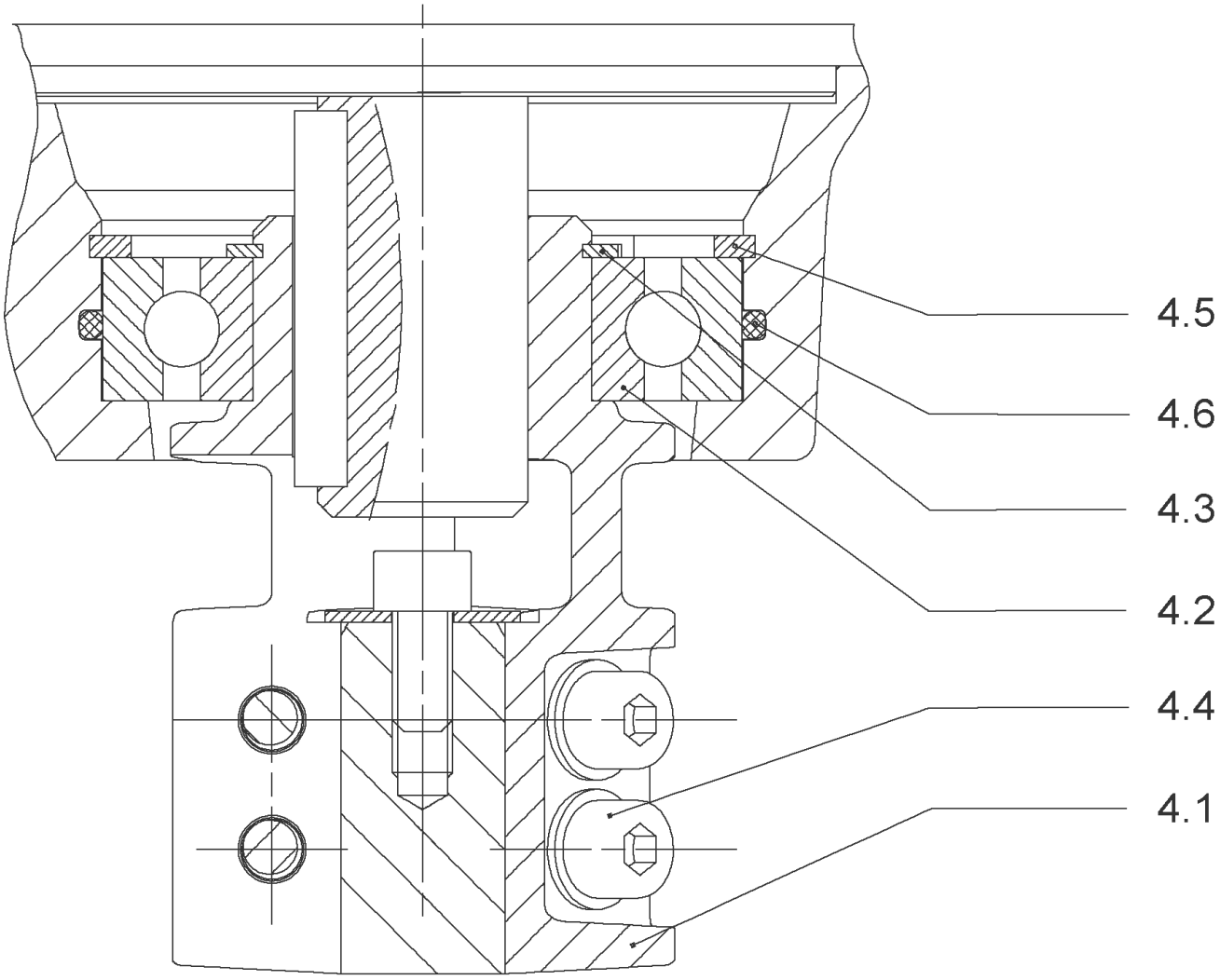
4.5
4.6
4.3
4.2
4.4
4.1

## COUPLING D.16xD.24 FT115 HELIX KIT (4159709)

| Item | Article no. | Description | Quantity |
|---|---|---|---|
| 4.1 | | COUPLING M+ Ø16XØ24 FT115 MACHINED | 1 |
| 4.2 | 2131023 | BALL BEARING 6207/ZZ-C3(HT)VP. | 1 |
| 4.3 | 4234254 | CIRCLIP-FOR-SHAFT-D35x1.5 VP. | 1 |
| 4.4 | 4157726 | SCREW KIT M8X30 (4 PIECES) | 1 |
| 4.5 | 4234251 | CIRCLIP-D72x2.5 VP. | 1 |
| 4.6 | 4234246 | O-RING 72X3 VP. | 1 |
| | | NOMEL CONTACT WASHER 8x16x1,4 STEEL ZC | 1 |

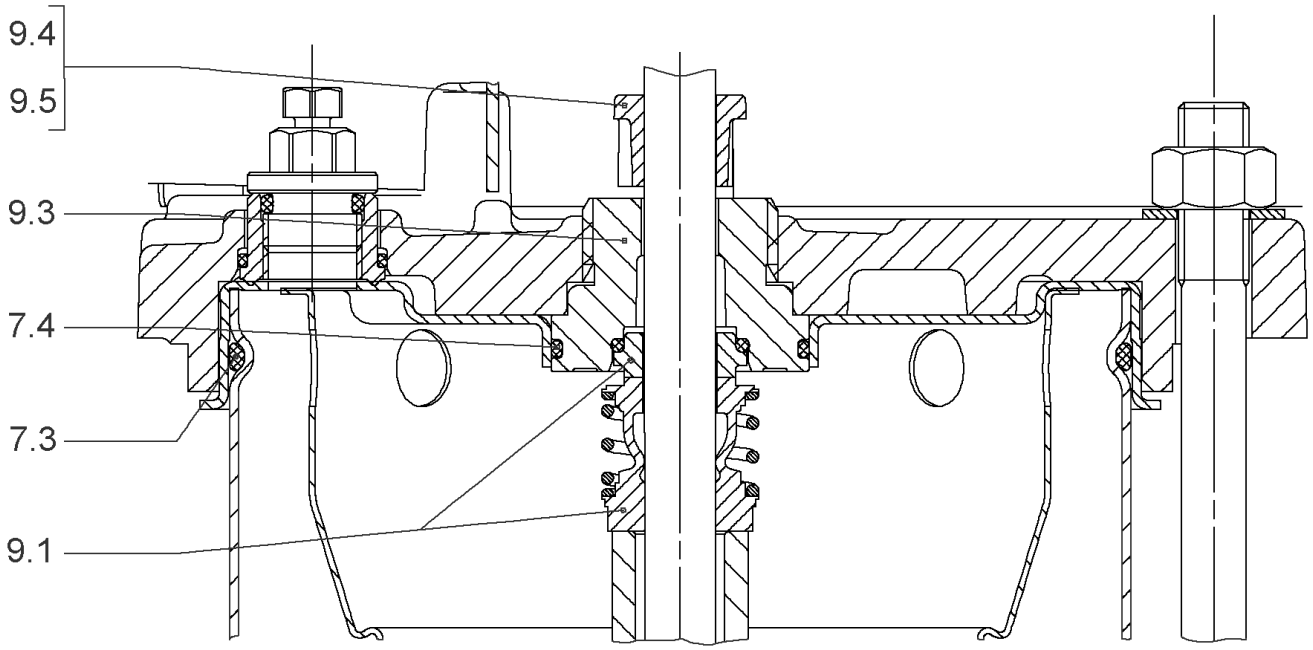
9.4
9.5
9.3
7.4
7.3
9.1

## SEAL-KIT-HELIX6-10-16 O/E KIT (4171327)

| Item | Article no. | Description | Quantity |
|---|---|---|---|
| 7.3 | 4176513 | O-RING FOR PUMP JACKET VP. | 1 |
| 7.4 | 2127603 | O-RING ID.37,6x2,4 EPDM VP. | 1 |
| 9.1 | 4177801 | MECH.SEAL HELIX6-10-16 O/E VP. | 1 |
| 9.3 | 4177798 | MACHINED RING HOLDER M+6" Ø16 304 VP. | 1 |
| 9.5 | 4177799 | MACHINED DRIVE RING Ø16 VP. | 1 |
| 9.4 | 4176520 | SCREW CH M5x5 A4-70 ( 3PIECES ) | 1 |

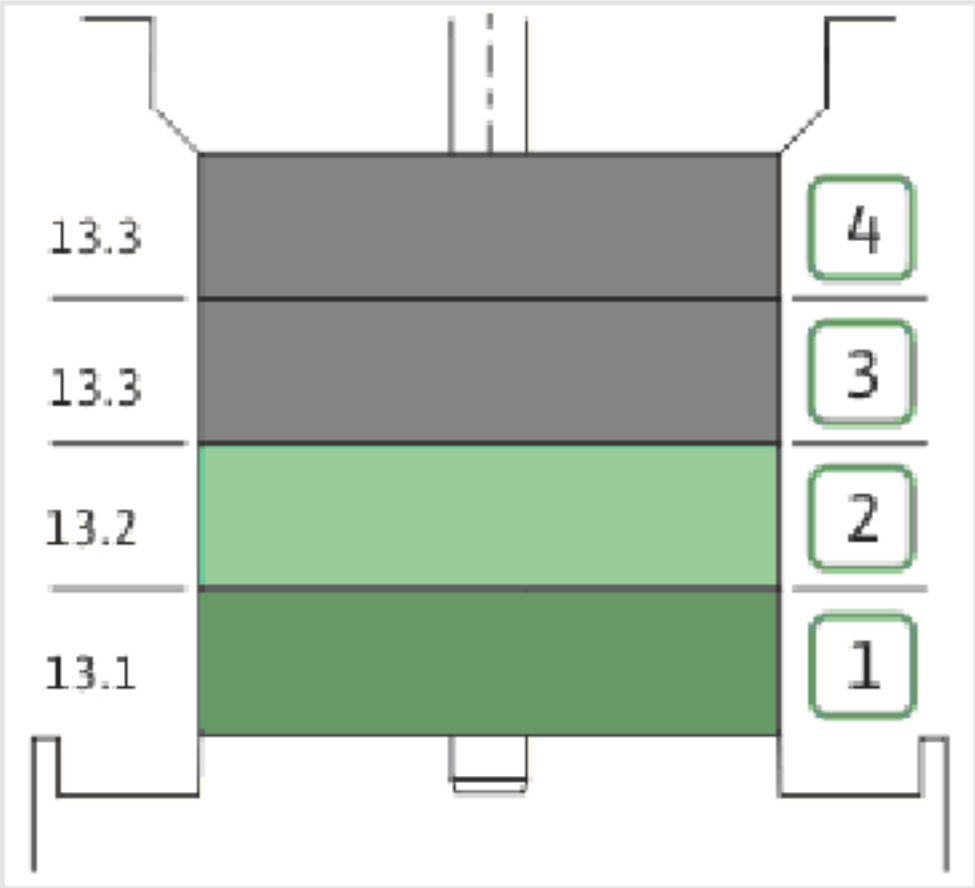
13.3
13.3
13.2
13.1
4
3
2
1

| Item | Article no. | Description | Quantity |
|---|---|---|---|
| 13.1 | 4174084 | STAGE HELIX 6 1.4301 KIT | 1 |
| | | > MACH.STG-CASING-WOGV-WNR-M+6-304 | 1 |
| | | > IMPELLER-M+6-304 | 1 |
| 13.2 | 4174089 | INTERMEDIATE STAGE HELIX 6 1.4301 KIT | 1 |
| | | > MACH.BEARING-STG-CASING-WNR-M+6-304 | 1 |
| | | > IMPELLER-M+6-304 | 1 |
| | | > SHAFT SLEEVE-SPACER-Ø19,35x18,465-304 | 1 |
| | | > SHAFT-SLEEVE-D16xD20x18-CW | 1 |
| 13.3 | 4174090 | INTERMEDIATE STAGE HELIX 6 1.4301 KIT | 1 |
| | | > MACH.STD-STG-CASING-WGV+NR-M+6-304 | 1 |
| | | > IMPELLER-M+6-304 | 1 |
| | | > IMPELLER SPACER Ø16,05X19,45-L36,465-304 | 1 |

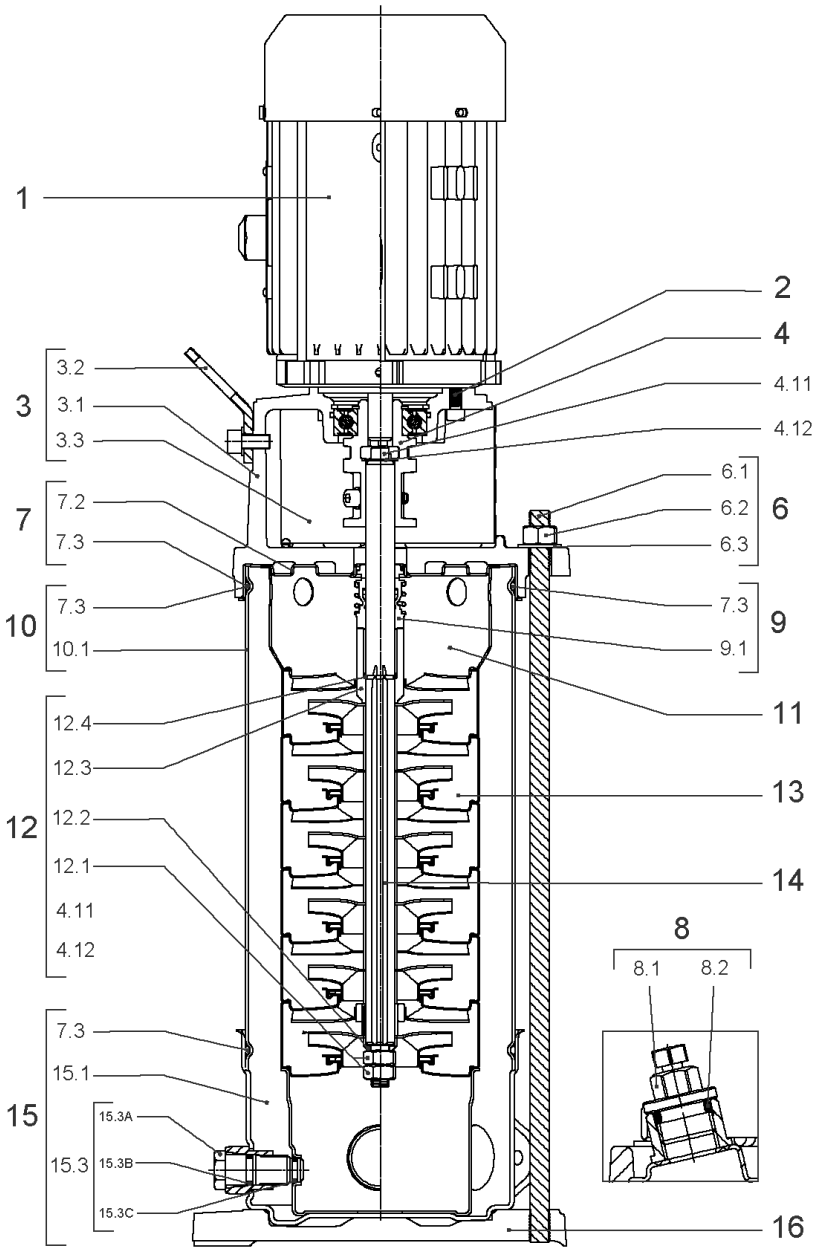
1
2
4
4.11
4.12
3
3.2
3.1
3.3
7
7.2
7.3
6
6.1
6.2
6.3
10
7.3
10.1
9
7.3
9.1
11
12
12.4
12.3
12.2
12.1
4.11
4.12
13
14
8
8.1
8.2
15
7.3
15.1
15.3
15.3A
15.3B
15.3C
16

## HELIX VE604-1/16/E/S (4201581)

| Item | Article no. | Description | Quantity |
|---|---|---|---|
| 1 | | DRIVE HELIX-VE604-IE4-WE KIT | 1 |
| Note: MOTOR BRAND WILO ELEC | | | |
| | | SPARE PARTS MOTOR:ON REQUEST | 1 |
| 2 | 4159707 | SCREW M8X30 (4 PIECES) | 1 |
| 3 | 4213784 | LANTERN FT115 HELIX KIT | 1 |
| 3.1 | | > LANT-MOT-VMI-ReDTC6"-FT115-MACHINED+CATA | 1 |
| 3.2 | 4184852 | > EYELET CPL.FT HELIX (2 PIECES) | 1 |
| 3.3 | 4213782 | > COUPLING PROTECTOR FT115/130 HELIX KIT | 1 |
| 4 | 4159709 | COUPLING D.16xD.24 FT115 HELIX KIT | 1 |
| 6 | 4177817 | STUD BOLT M12X341 KIT | 1 |
| 6.1 | | > TIE BOLT M12-341x18x30-1.4057 | 1 |
| 6.2 | 2094647 | > NUT M12 M12 ISO4032 VP. | 1 |
| 6.3 | 2123557 | > WASHER CS-12.4-24-1.6-NFE25 (4 PIECES) | 1 |
| 7 | 4214481 | STATIONARY RING HOLDER HELIX D27 ReDTC | 1 |
| 7.2 | 4214479 | > STATIONARY RING HOLDER HELIX D27 VP. | 1 |
| 7.3 | 4176513 | > O-RING FOR PUMP JACKET VP. | 1 |
| 8 | 4212724 | FILING/PURGING PLUG HELIX ReDTC KIT | 1 |
| 8.1 | | > FILLING PLUG MVI6"-304 | 1 |
| 8.2 | 4177800 | > O-RING EPDM PLUG HELIX VP. | 1 |
| 9 | 4214483 | MECH.SEAL HELIX6-10-16 O/E ReDTC KIT | 1 |
| 9.1 | 4177801 | > MECH.SEAL HELIX6-10-16 O/E VP. | 1 |
| 7.3 | 4176513 | > O-RING FOR PUMP JACKET VP. | 1 |
| 10 | 4177818 | HOUSING PIPES Ø152-M+1004-304 KIT | 1 |
| 7.3 | 4176513 | > O-RING FOR PUMP JACKET VP. | 1 |
| 10.1 | | > HOUSING-PIPE Ø152-M+1004/1603-304 | 1 |
| 11 | 4174087 | CENTERING STAGE-RETURN HELIX6 1.4301VP. | 1 |
| 12 | 4214486 | SHAFT EQUIPMENT HELIX V6 ReDTC KIT | 1 |
| 12.1 | | > NUT-H-M10-A4.70 | 1 |
| 12.2 | | > SERRATED LOCK WASHER M+6M3-316L | 1 |
| 12.3 | | > 1/2-SNAP-RING-6/10M3-316L | 1 |
| 12.4 | | > STOP-RUSH-1/2-D16xd2-M+316 | 1 |
| 4.11 | | > SCREW CHC-M6X14-8.8-ISO4762-GEOMET500A | 1 |
| 4.12 | | > WASHER D.24 L6U ZINK | 1 |
| 13 | | HYDRAULIC HELIX V 604 1.4307 | 1 |

| Item | Article no. | Description | Quantity |
|---|---|---|---|
| 14 | 4214495 | SHAFT D.16X278 HELIX 1.4057 VP. | 1 |
| 15 | 4217897 | PUMP HOUSING HELIX DN32 PN16 1.4301 KIT | 1 |
| 7.3 | 4176513 | > O-RING FOR PUMP JACKET VP. | 1 |
| 15.1 | | > BLASTING PPE HOUSING V-PN16-DN32-5"-304 | 1 |
| 15.2 | 4217891 | > COUNTER FLANGE-G1"1/4-PN16-GJL KIT | 1 |
| 15.3 | 4171321 | > PRIMING/DRAIN PLUG EPDM HELIX KIT | 1 |
| 16 | 4177964 | BASEPLATE HELIX V2/4/6 PN16 VP. | 1 |

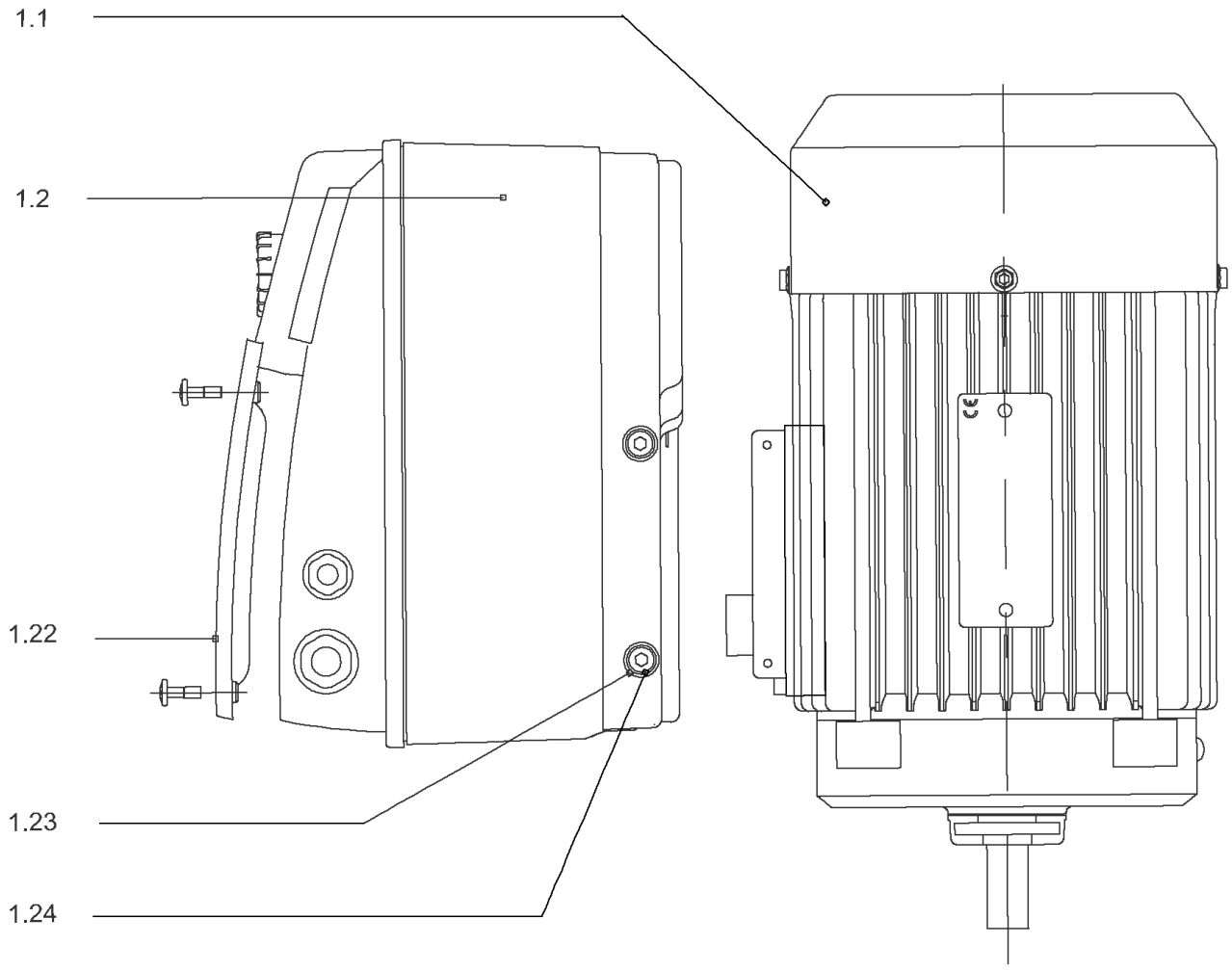
1.1
1.2
1.22
1.23
1.24

## DRIVE HELIX-VE604-IE4-WE KIT

| Item | Article no. | Description | Quantity |
|---|---|---|---|
| 1.1 | 4207918 | MOTOR 1.5/2/90 3~ 380V 60HZ IE4 WE VP. | 1 |
| | | SPARE PARTS MOTOR:ON REQUEST | 1 |
| 1.2 | 4209316 | MODULE HELIX-VE604-IE4-WE KIT | 1 |
| 1.22 | 2054227 | > MODULE COVER/GASKET TL3/4 KIT | 1 |
| 1.23 | 4215716 | > SCREW M5X16 DIN912 8.8 A2A (4pieces) VP. | 1 |
| 1.24 | 2057978 | > RONDELLE A5,3 DIN6797 FST ZN (4 PIECES) | 1 |

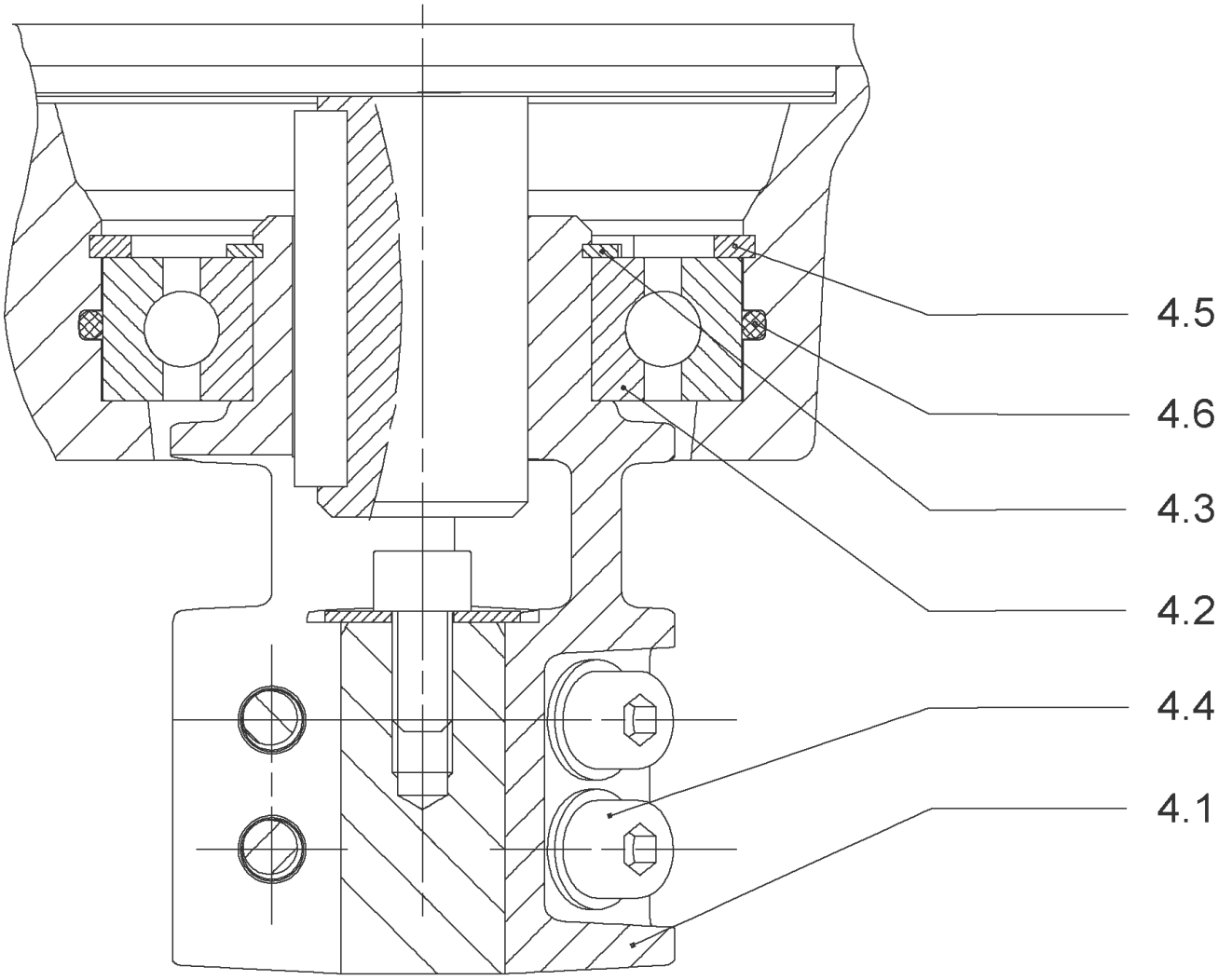
4.5
4.6
4.3
4.2
4.4
4.1

## COUPLING D.16xD.24 FT115 HELIX KIT (4159709)

| Item | Article no. | Description | Quantity |
|---|---|---|---|
| 4.1 | | COUPLING M+ Ø16XØ24 FT115 MACHINED | 1 |
| 4.2 | 2131023 | BALL BEARING 6207/ZZ-C3(HT)VP. | 1 |
| 4.3 | 4234254 | CIRCLIP-FOR-SHAFT-D35x1.5 VP. | 1 |
| 4.4 | 4157726 | SCREW KIT M8X30 (4 PIECES) | 1 |
| 4.5 | 4234251 | CIRCLIP-D72x2.5 VP. | 1 |
| 4.6 | 4234246 | O-RING 72X3 VP. | 1 |
| | | NOMEL CONTACT WASHER 8x16x1,4 STEEL ZC | 1 |

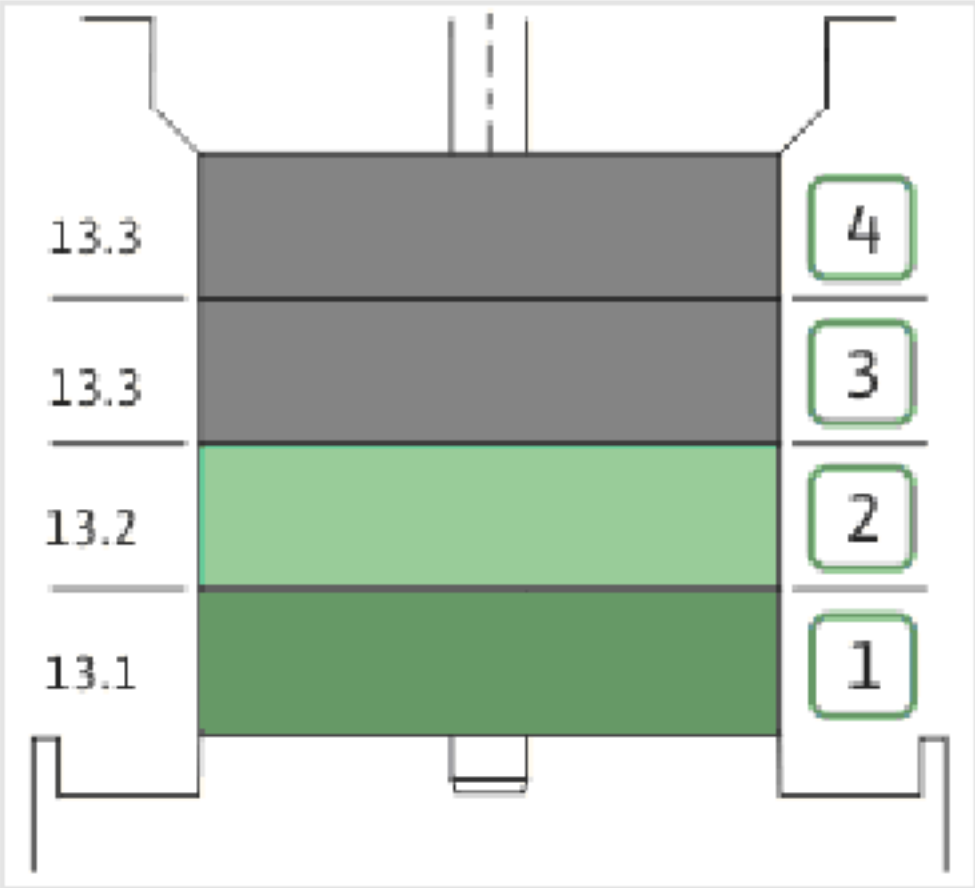
13.3
13.3
13.2
13.1
4
3
2
1

| Item | Article no. | Description | Quantity |
|---|---|---|---|
| 13.1 | 4174084 | STAGE HELIX 6 1.4301 KIT | 1 |
| | | > MACH.STG-CASING-WOGV-WNR-M+6-304 | 1 |
| | | > IMPELLER-M+6-304 | 1 |
| 13.2 | 4174089 | INTERMEDIATE STAGE HELIX 6 1.4301 KIT | 1 |
| | | > MACH.BEARING-STG-CASING-WNR-M+6-304 | 1 |
| | | > IMPELLER-M+6-304 | 1 |
| | | > SHAFT SLEEVE-SPACER-Ø19,35x18,465-304 | 1 |
| | | > SHAFT-SLEEVE-D16xD20x18-CW | 1 |
| 13.3 | 4174090 | INTERMEDIATE STAGE HELIX 6 1.4301 KIT | 1 |
| | | > MACH.STD-STG-CASING-WGV+NR-M+6-304 | 1 |
| | | > IMPELLER-M+6-304 | 1 |
| | | > IMPELLER SPACER Ø16,05X19,45-L36,465-304 | 1 |

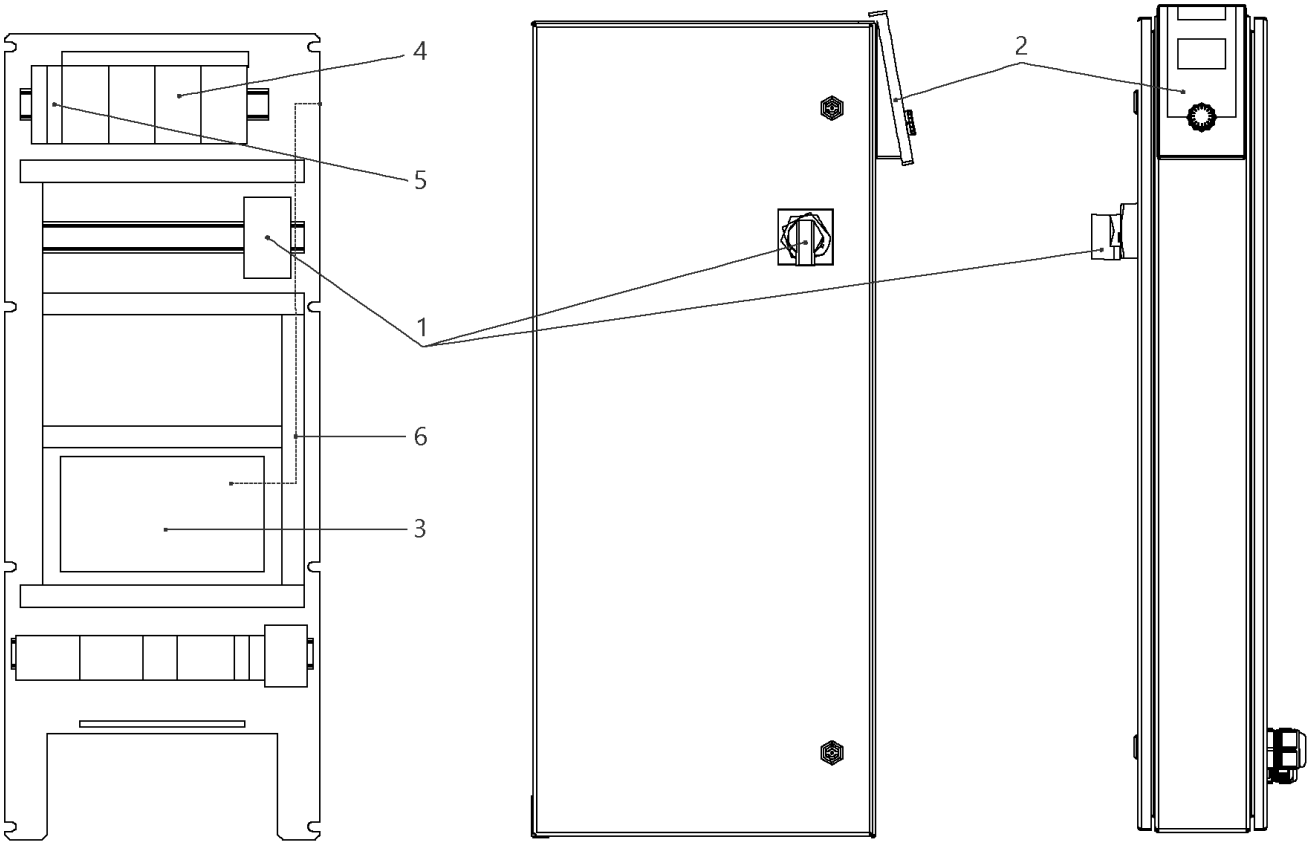
4
5
1
6
3
2

## W-CTRL-SCE-B-4x0,55-1,5KW-T4-FM-ND1

| Item | Article no. | Description | Quantity |
|---|---|---|---|
| 1 | 2104470 | MAIN SWITCH OT40F3 L250 KIT | 1 |
| 2 | 4184784 | CONTROL PANEL HMI SC KIT | 1 |
| 2 | 4185259 | ASSEMBLY DISPLAY SC PKG VP. | 1 |
| 3 | 4185257 | ASSEMBLY CPU SCe Booster VP. | 1 |
| 4 | 2051217 | AUTOM.CIRCUIT BREAKER S203 B16 TO7,5kW | 1 |
| 5 | 2046288 | CIRCUIT BREAKER S201 B16 | 1 |
| 6 | 4197081 | CABLE RJ45 CAT6 0,5M RED SC-PANEL VP. | 1 |

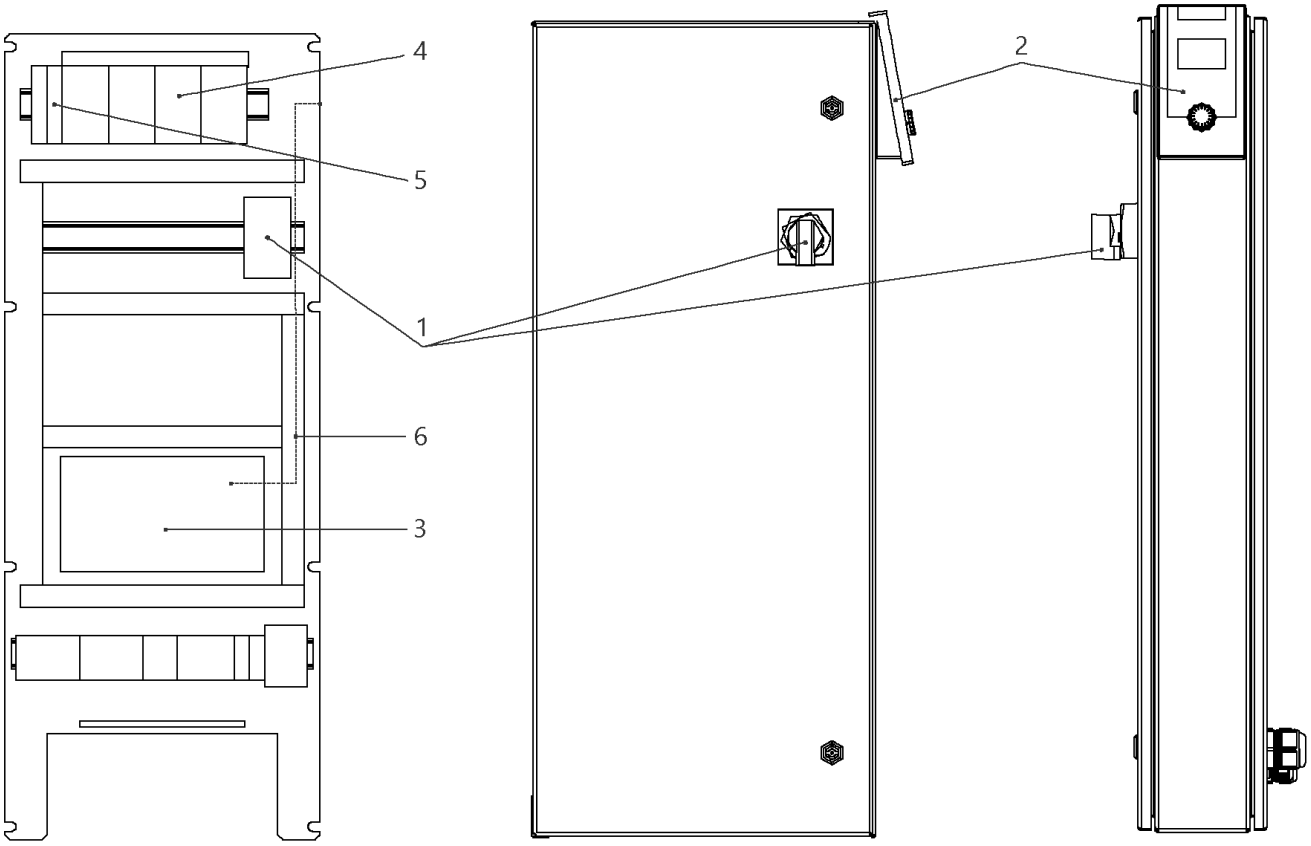
4
5
1
6
3
2

## W-CTRL-SCE-B-4x10A-T34-FM-ND1-AVC-PKG (2541915)

| Item | Article no. | Description | Quantity |
|---|---|---|---|
| 1 | 2104473 | MAIN SWITCH OT63F3 L105 KIT | 1 |
| 2 | 4184784 | CONTROL PANEL HMI SC KIT | 1 |
| 2 | 4185259 | ASSEMBLY DISPLAY SC PKG VP. | 1 |
| Note: DISPLAY ALONE / PLATINE SEULE | | | |
| 3 | 4185257 | ASSEMBLY CPU SCe Booster VP. | 1 |
| 5 | 2046288 | CIRCUIT BREAKER S201 B16 | 1 |
| 4 | 2119861 | AUTOMATIC CIRCUIT BREAKER S203 B13 3POL. | 1 |
| 6 | 4197081 | CABLE RJ45 CAT6 0,5M RED SC-PANEL VP. | 1 |

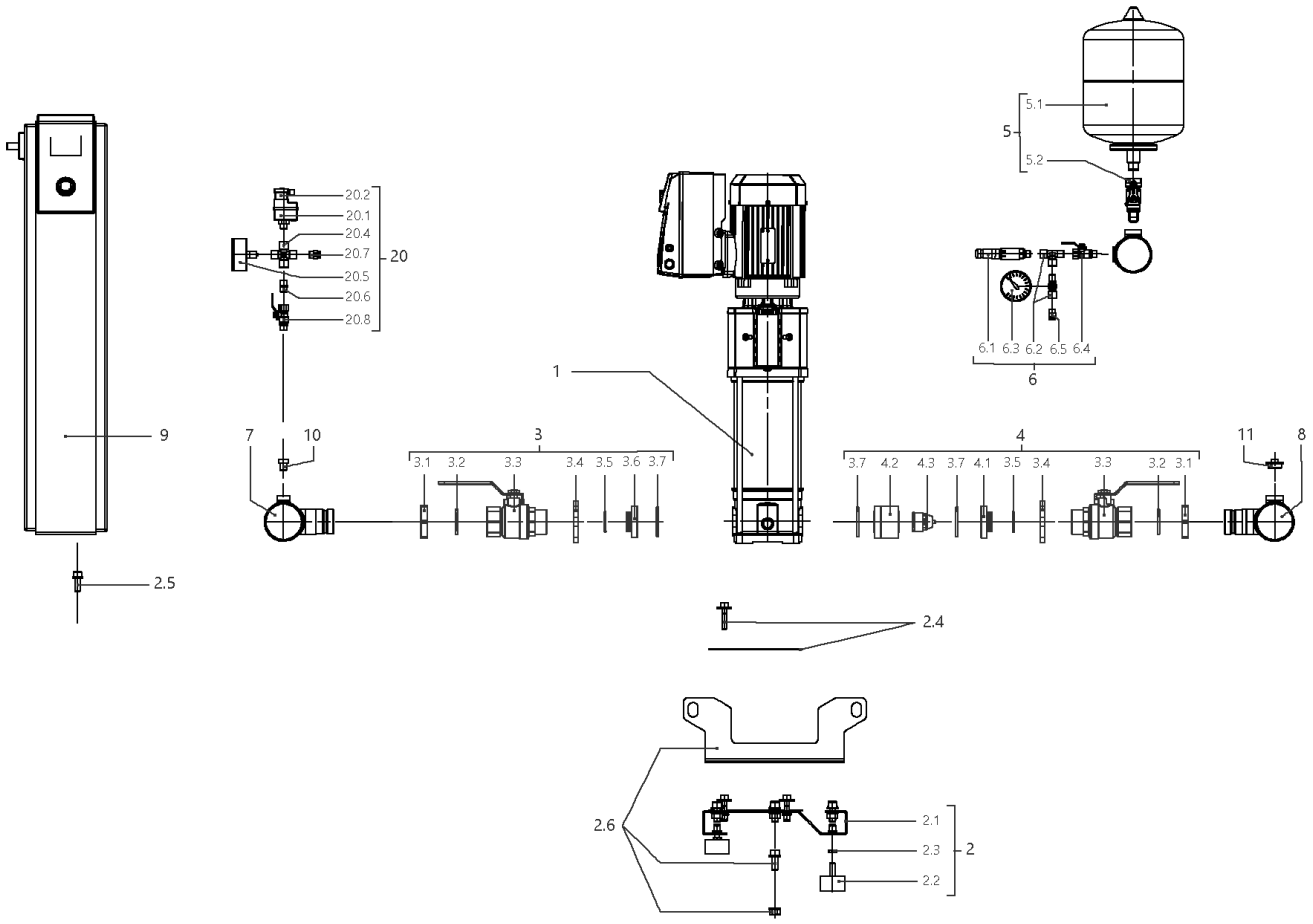
5.1
5
5.2
20.2
20.1
20.4
20.7
20
20.5
20.6
20.8
6.1 6.3 6.2 6.5 6.4
6
1
9
7
10
3
3.1 3.2 3.3 3.4 3.5 3.6 3.7
4
3.7 4.2 4.3 3.7 4.1 3.5 3.4 3.3 3.2 3.1
11
8
2.5
2.4
2.6
2.1
2.3
2
2.2

## SiBoost Smart 4HELIX VE606 (2536379)

| Item | Article no. | Description | Quantity |
|---|---|---|---|
| 1 | | HELIX VE606-1/16/E/S | 1 |
| Note: TO / BIS / JUSQU'AU 31/03/2016 | | | |
| 1 | 4201583 | HELIX VE606-1/16/E/S | 1 |
| Note: FROM / AB / À PARTIR DU 01/04/2016 | | | |
| 2 | 4200146 | BASE PLATE DE4 1450x420 KIT | 1 |
| Note: TO / BIS / JUSQU'AU 28/02/2013 | | | |
| 2.1 | | > BASEPLATE_4x4/6/10/16V_E300_BOX_150 | 1 |
| 2.2 | 2028654 | > VIBRATION DAMPER D.50X30 M10X28 | 1 |
| 2.3 | 2028281 | > NUT M10 DIN936 (ISO4035) 17H VZ | 1 |
| 2.4 | 4199875 | > HOLDER PUMP Siboost Helix V2/4 KIT | 1 |
| 2.5 | 4197084 | > HOLDER SWITCHBOX WILO Smart Control KIT | 1 |
| 2.6 | 4197117 | > LIFTING Siboost HELIX SC KIT | 1 |
| 2 | 4200143 | BASE PLATE DE4 1450x300 KIT | 1 |
| Note: FROM / AB / À PARTIR DU 01/03/2013 | | | |
| 2.1 | | > BASEPLATE_4x4/6/10V_E300_1450x300BOX_150 | 1 |
| 2.2 | 2028654 | > VIBRATION DAMPER D.50X30 M10X28 | 1 |
| 2.3 | 2028281 | > NUT M10 DIN936 (ISO4035) 17H VZ | 1 |
| 2.4 | 4199875 | > HOLDER PUMP Siboost Helix V2/4 KIT | 1 |
| 2.5 | 4197084 | > HOLDER SWITCHBOX WILO Smart Control KIT | 1 |
| 2.6 | 4197085 | > LIFTING Siboost HELIX SC KIT | 1 |
| 3 | 4199876 | SUCTION SIDE Siboost Helix V2/4/6 KIT | 1 |
| 3.1 | 2032610 | > NUT G11/4 MS VP. | 1 |
| 3.2 | 2032611 | > O-RING ID.36,09X3,53N DIN3771 E7502 | 1 |
| 3.3 | 2507646 | > BALL VALVE G11/4"M-F-W.HANDLE 1/4-TURN | 1 |
| 3.4 | 2032613 | > SCREWED FLANGE G1 1/4" LK-75 ST37VZ | 1 |
| 3.5 | 2032614 | > O-RING ID.29,82X2,62N DIN3771 E7502 | 1 |
| 3.6 | 2032615 | > SPACER F.I/A KUH.DN32 CUZN | 1 |
| 3.7 | 2032616 | > O-RING ID.44X3,53N DIN3771 E7502 | 1 |
| 4 | 4199877 | DELIVERY SIDE Siboost Helix V2/4/6 KIT | 1 |
| 3.1 | 2032610 | > NUT G11/4 MS VP. | 1 |
| 3.2 | 2032611 | > O-RING ID.36,09X3,53N DIN3771 E7502 | 1 |
| 3.3 | 2507646 | > BALL VALVE G11/4"M-F-W.HANDLE 1/4-TURN | 1 |
| 3.4 | 2032613 | > SCREWED FLANGE G1 1/4" LK-75 ST37VZ | 1 |
| 3.5 | 2032614 | > O-RING ID.29,82X2,62N DIN3771 E7502 | 1 |

| Item | Article no. | Description | Quantity |
|---|---|---|---|
| 4.1 | 2058116 | > SPACER F.I/A KUH.DN32 CUZN | 1 |
| 3.7 | 2032616 | > O-RING ID.44X3,53N DIN3771 E7502 | 1 |
| 4.2 | 2058115 | > HOUSING RFV(RV-IN) DN32 SGS/DRS | 1 |
| 4.3 | 2027870 | > NON-RETURN-DEVICE INSERT DN32(MTR) | 1 |
| 5 | 2032642 | DIAPHREM TANK 8L/PN16 DIN4807/T5 KIT | 1 |
| 5.1 | 2045914 | > DIAPHREM TANK 8L TYP-DD 16BAR | 1 |
| 5.2 | 2027853 | > FLOW FITTING G3/4 FOR DIAPHRAGM VES. | 1 |
| 6 | 4197076 | PRESSURE SENSOR/ GAUGE 0-16BAR KIT | 1 |
| 6.1 | 2085909 | > PRESS.SENSOR 1/4" 0-16BAR 4-20MA VP. | 1 |
| 6.2 | 4197077 | > T-PIECE 1/4" VP. | 1 |
| 6.3 | 2028692 | > PRESSURE GAUGE NG63-PN16-G1/4 | 1 |
| 6.4 | 2028291 | > BALL TAP R1/4" PN42 GIACOMINI R254DL | 1 |
| 6.5 | 2028691 | > BLOWGUN 1/4" MS 30BAR VP. | 1 |
| 7 | 4200144 | PIPE DE4 21/2''-4x11/4"+2x1/4x900 VP. | 1 |
| 8 | 4200145 | PIPE DE4 21/2''-4x11/4"+2x1/4+1x3/4x900 | 1 |
| 9 | | W-CTRL-SCE-B-4x2,2KW-T4-FM-ND2 | 1 |
| Note: TO / BIS / JUSQU'AU 28/02/2013 | | | |
| 9 | | W-CTRL-SCE-B-4x2,2-3,0KW-T4-FM-ND1 | 1 |
| Note: FROM / AB / À PARTIR DU 01/03/2013 - TO / BIS / JUSQU'AU 18/05/2014 | | | |
| 9 | 2541915 | W-CTRL-SCE-B-4x10A-T34-FM-ND1-AVC-PKG | 1 |
| Note: FROM / AB / À PARTIR DU 19/05/2014 | | | |
| 10 | 4197079 | PLUG G1/4"x10 AISI304 KIT | 1 |
| 11 | 2032654 | PLUG R3/4" MS VIEGA 1751 | 1 |
| 20 | | ASSEMBLY WMS. DE-EB. +VP | 1 |
| 20.1 | 2028652 | > PRESSURE SWITCH PS3-ASR 1/(1,3) VP. | 1 |
| 20.2 | 2130983 | > PLUG PS3-415 WITH KABEL 1,5M 2NO VP. | 1 |
| 20.4 | 2028290 | > CROSSPIECE R1/4" MS-NICKEL | 1 |
| 20.5 | 2028687 | > PRESSURE GAUGE NG63 R1/4" HI.0-6BAR | 1 |
| 20.6 | 2054268 | > DUAL NIPPLE G1/4" x G1/4" MS VP. | 1 |
| 20.7 | 2028691 | > BLOWGUN 1/4" MS 30BAR VP. | 1 |
| 20.8 | 2028291 | > BALL TAP R1/4" PN42 GIACOMINI R254DL | 1 |

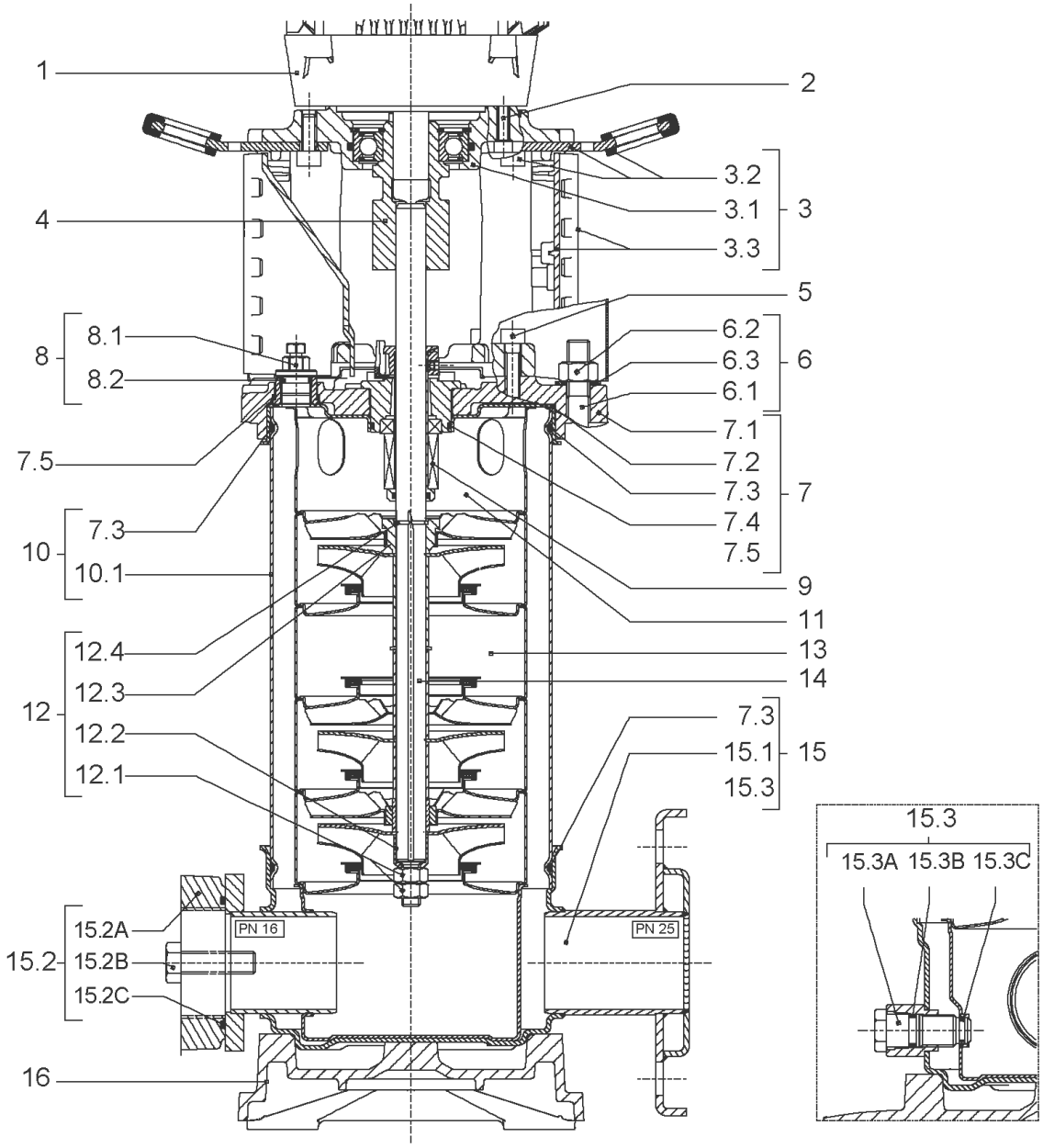
1
2
3.2
3.1
3
3.3
4
5
8.1
8
8.2
6.2
6.3
6
6.1
7.1
7.5
7.2
7.3
7
7.4
7.3
10
7.5
10.1
9
11
12.4
13
12.3
14
12
12.2
7.3
15.1
15
12.1
15.3
15.3
15.3A 15.3B 15.3C
15.2A
PN 16
PN 25
15.2
15.2B
15.2C
16

| Item | Article no. | Description | Quantity |
|---|---|---|---|
| 1 | | DRIVE HELIX-VE606-IE2-WE KIT | 1 |
| Note: MOTOR BRAND WILO ELEC | | | |
| 1 | | DRIVE HELIX-VE606-IE4-WE KIT | 1 |
| Note: MOTOR BRAND WILO ELEC | | | |
| 2 | 4159703 | SCREW M8X40 (4 PIECES) | 1 |
| 3 | 4172795 | LANTERNE FT115 HELIX KIT | 1 |
| 3.1 | | > M+5_6_LANTERN_ONE-PIECE_FT115_CATA | 1 |
| 3.2 | 2127604 | > EYELET CPL.FT HELIX(2 PIECES) | 1 |
| 3.3 | 4159692 | > COUPLING PROTECTOR FT HELIX KIT | 1 |
| 4 | 4159709 | COUPLING D.16xD.24 FT115 HELIX KIT | 1 |
| 5 | 4159707 | SCREW M8X30 (4 PIECES) | 1 |
| 6 | 4177822 | STUD BOLT M12X413 KIT | 1 |
| 6.1 | | > TIE BOLT M12-413x18x30-1.4057 | 1 |
| 6.2 | 2094647 | > NUT M12 M12 ISO4032 VP. | 1 |
| 6.3 | 2123557 | > WASHER CS-12.4-24-1.6-NFE25 (4 PIECES) | 1 |
| 7 | 4210143 | STATIONARY RING HOLDER HELIX 6" EPDM | 1 |
| 7.2 | 2127607 | > STATIONARY RING HOLDER 6" HELIX 1.4301 V | 1 |
| 7.3 | 4176513 | > O-RING FOR PUMP JACKET VP. | 1 |
| 7.4 | 2127603 | > O-RING ID.37,6x2,4 EPDM VP. | 1 |
| 7.5 | 2127602 | > O-RING ID.21,35x2 EPDM VP. | 1 |
| 8 | 4159686 | FILING/PURGING PLUG HELIX EPDM KIT | 1 |
| 9 | 4171327 | SEAL-KIT-HELIX6-10-16 O/E KIT | 1 |
| 10 | 4177823 | HOUSING PIPES D.152X285 1.4301 KIT | 1 |
| 7.3 | 4176513 | > O-RING FOR PUMP JACKET VP. | 1 |
| 10.1 | | > HOUSING-PIPE Ø152-M+1006-304 | 1 |
| 11 | 4174087 | CENTERING STAGE-RETURN HELIX6 1.4301VP. | 1 |
| 12 | 4174086 | SHAFTS EQUIPMENT HELIX V6 MONOBLOC KIT | 1 |
| 12.1 | | > NUT-H-M10-A4.70 | 1 |
| 12.2 | | > SERRATED LOCK WASHER M+6M3-316L | 1 |
| 12.3 | | > IMPELLER STOP RING L33,2-304 | 1 |
| 12.4 | | > STOP-RUSH-1/2-D16xd2-M+316 | 1 |
| 13 | | HYDRAULIC HELIX V 606 1.4307 | 1 |
| 14 | 4177825 | SHAFT D.16X405 1.4301 VP. | 1 |
| 15 | 4217897 | PUMP HOUSING HELIX DN32 PN16 1.4301 KIT | 1 |

| Item | Article no. | Description | Quantity |
|---|---|---|---|
| 7.3 | 4176513 | > O-RING FOR PUMP JACKET VP. | 1 |
| 15.1 | | > BLASTING PPE HOUSING V-PN16-DN32-5"-304 | 1 |
| 15.2 | 4217891 | > COUNTER FLANGE-G1"1/4-PN16-GJL KIT | 1 |
| 15.3 | 4171321 | > PRIMING/DRAIN PLUG EPDM HELIX KIT | 1 |
| 16 | 4177964 | BASEPLATE HELIX V2/4/6 PN16 VP. | 1 |

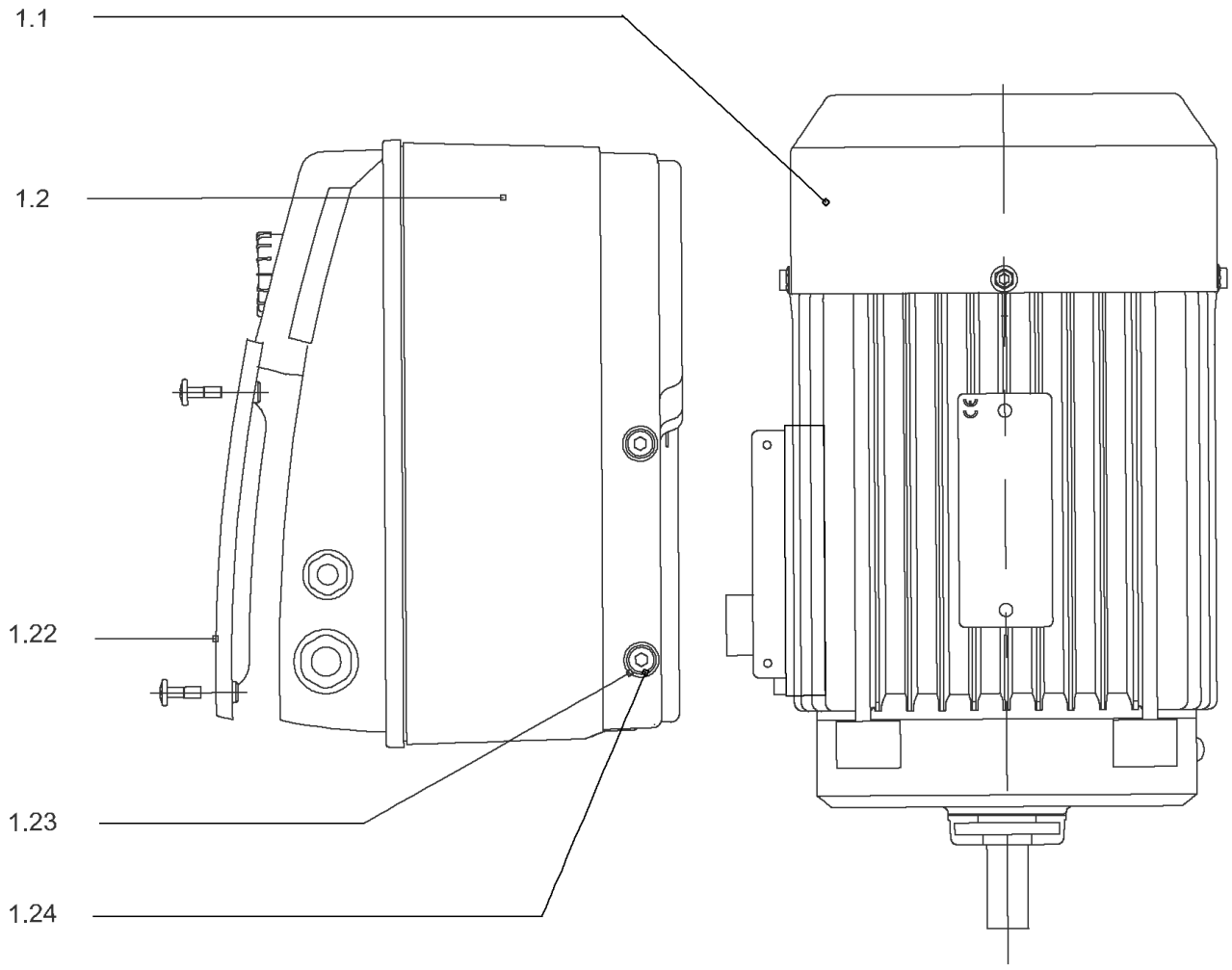
1.1
1.2
1.22
1.23
1.24

## DRIVE HELIX-VE606-IE2-WE KIT

| Item | Article no. | Description | Quantity |
|---|---|---|---|
| 1.1 | 4185016 | MOTOR 2,2/2/90 3~ 380V 60HZ IE2 WE VP. | 1 |
| | | SPARE PARTS MOTOR:ON REQUEST | 1 |
| 1.2 | 4186769 | MODULE HELIX-VE606-IE2-WE KIT | 1 |
| 1.22 | 2054227 | > MODULE COVER/GASKET TL3/4 KIT | 1 |
| 1.23 | 4215716 | > SCREW M5X16 DIN912 8.8 A2A (4pieces) VP. | 1 |
| 1.24 | 2057978 | > RONDELLE A5,3 DIN6797 FST ZN (4 PIECES) | 1 |

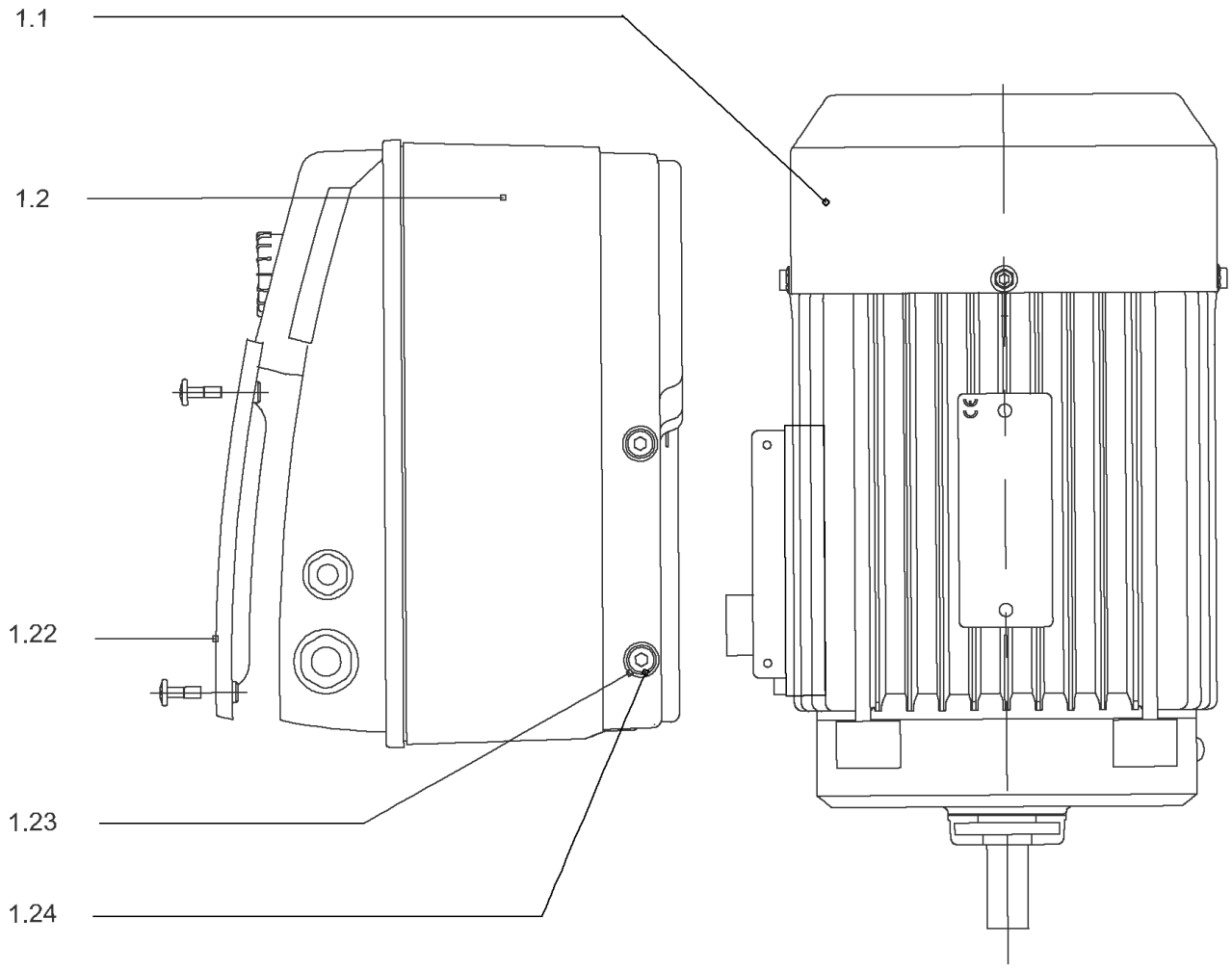
1.1
1.2
1.22
1.23
1.24

## DRIVE HELIX-VE606-IE4-WE KIT

| Item | Article no. | Description | Quantity |
|---|---|---|---|
| 1.1 | 4207920 | MOTOR 2.2/2/90 3~ 380V 60HZ IE4 WE VP. | 1 |
| | | SPARE PARTS MOTOR:ON REQUEST | 1 |
| 1.2 | 4209368 | MODULE HELIX-VE606-IE4-WE KIT | 1 |
| 1.22 | 2054227 | > MODULE COVER/GASKET TL3/4 KIT | 1 |
| 1.23 | 4215716 | > SCREW M5X16 DIN912 8.8 A2A (4pieces) VP. | 1 |
| 1.24 | 2057978 | > RONDELLE A5,3 DIN6797 FST ZN (4 PIECES) | 1 |

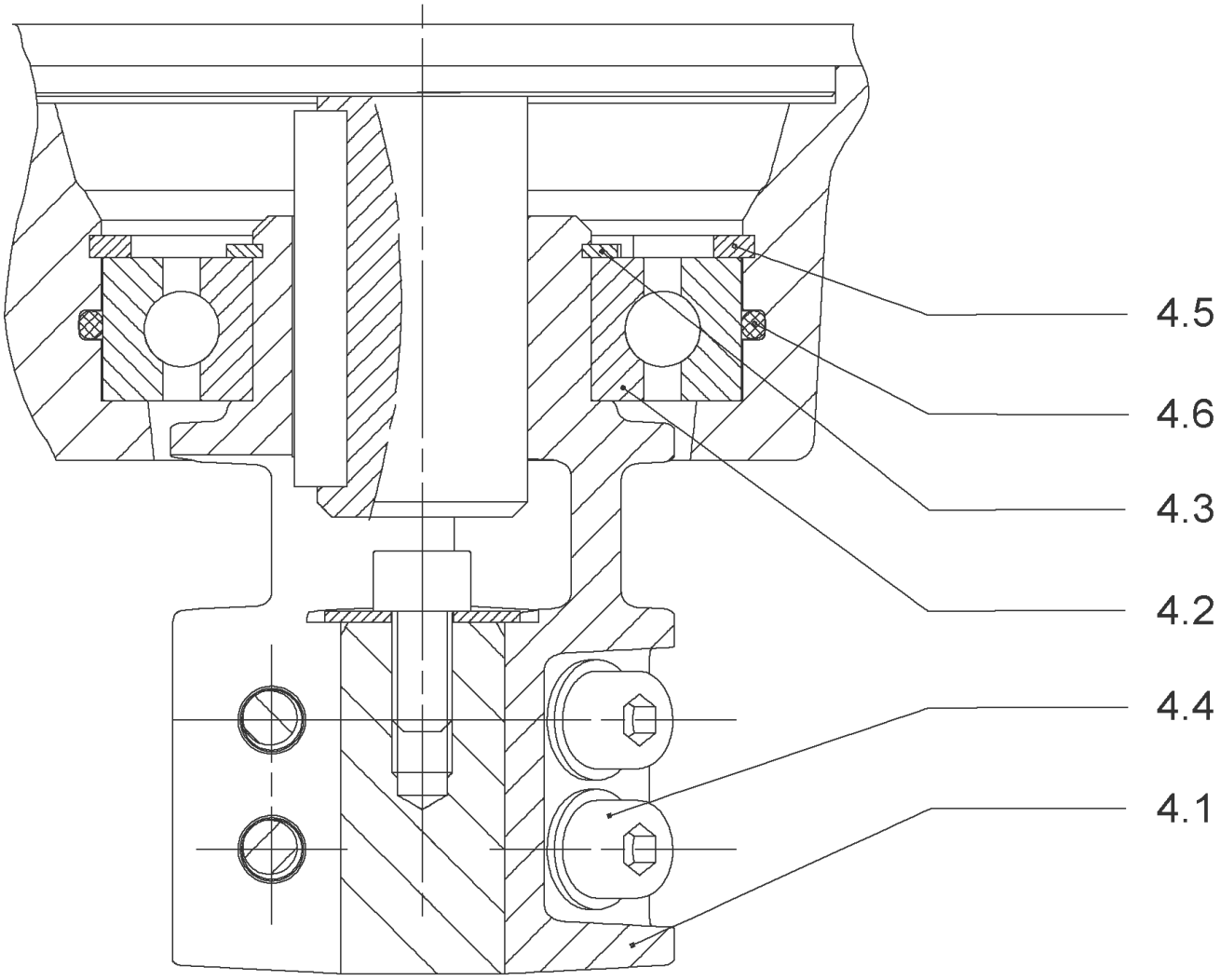
4.5
4.6
4.3
4.2
4.4
4.1

## COUPLING D.16xD.24 FT115 HELIX KIT (4159709)

| Item | Article no. | Description | Quantity |
|---|---|---|---|
| 4.1 | | COUPLING M+ Ø16XØ24 FT115 MACHINED | 1 |
| 4.2 | 2131023 | BALL BEARING 6207/ZZ-C3(HT)VP. | 1 |
| 4.3 | 4234254 | CIRCLIP-FOR-SHAFT-D35x1.5 VP. | 1 |
| 4.4 | 4157726 | SCREW KIT M8X30 (4 PIECES) | 1 |
| 4.5 | 4234251 | CIRCLIP-D72x2.5 VP. | 1 |
| 4.6 | 4234246 | O-RING 72X3 VP. | 1 |
| | | NOMEL CONTACT WASHER 8x16x1,4 STEEL ZC | 1 |

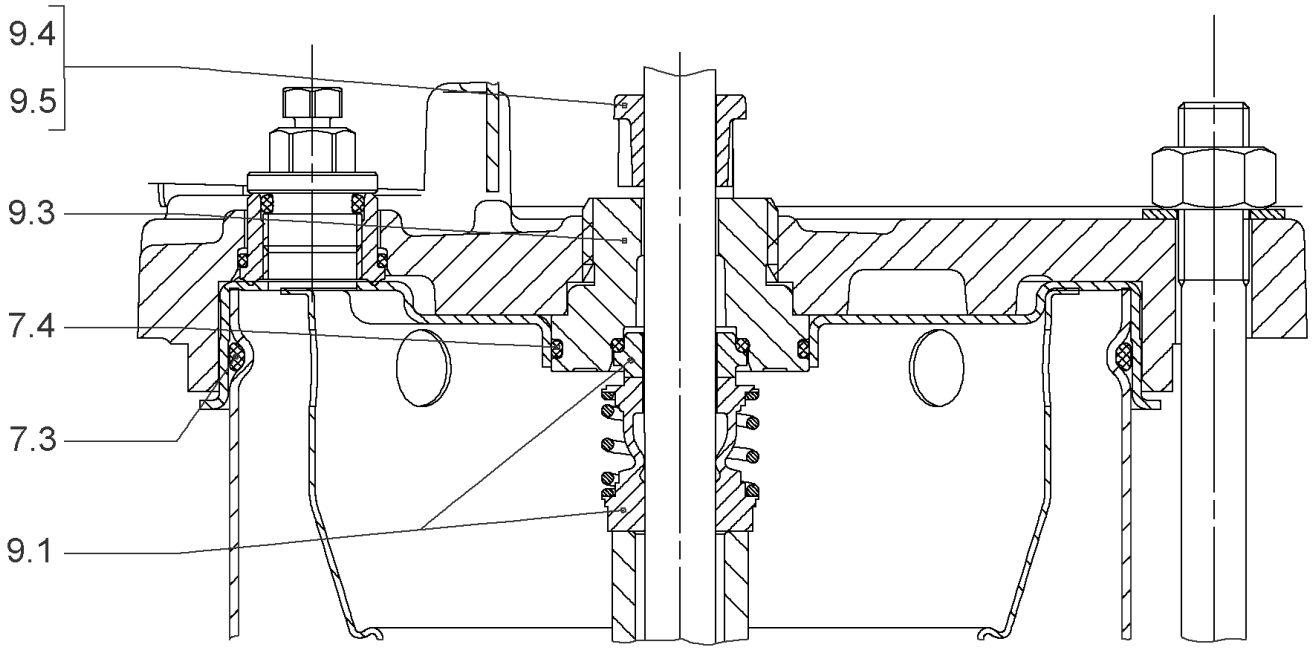
9.4
9.5
9.3
7.4
7.3
9.1

## SEAL-KIT-HELIX6-10-16 O/E KIT (4171327)

| Item | Article no. | Description | Quantity |
|---|---|---|---|
| 7.3 | 4176513 | O-RING FOR PUMP JACKET VP. | 1 |
| 7.4 | 2127603 | O-RING ID.37,6x2,4 EPDM VP. | 1 |
| 9.1 | 4177801 | MECH.SEAL HELIX6-10-16 O/E VP. | 1 |
| 9.3 | 4177798 | MACHINED RING HOLDER M+6" Ø16 304 VP. | 1 |
| 9.5 | 4177799 | MACHINED DRIVE RING Ø16 VP. | 1 |
| 9.4 | 4176520 | SCREW CH M5x5 A4-70 ( 3PIECES ) | 1 |

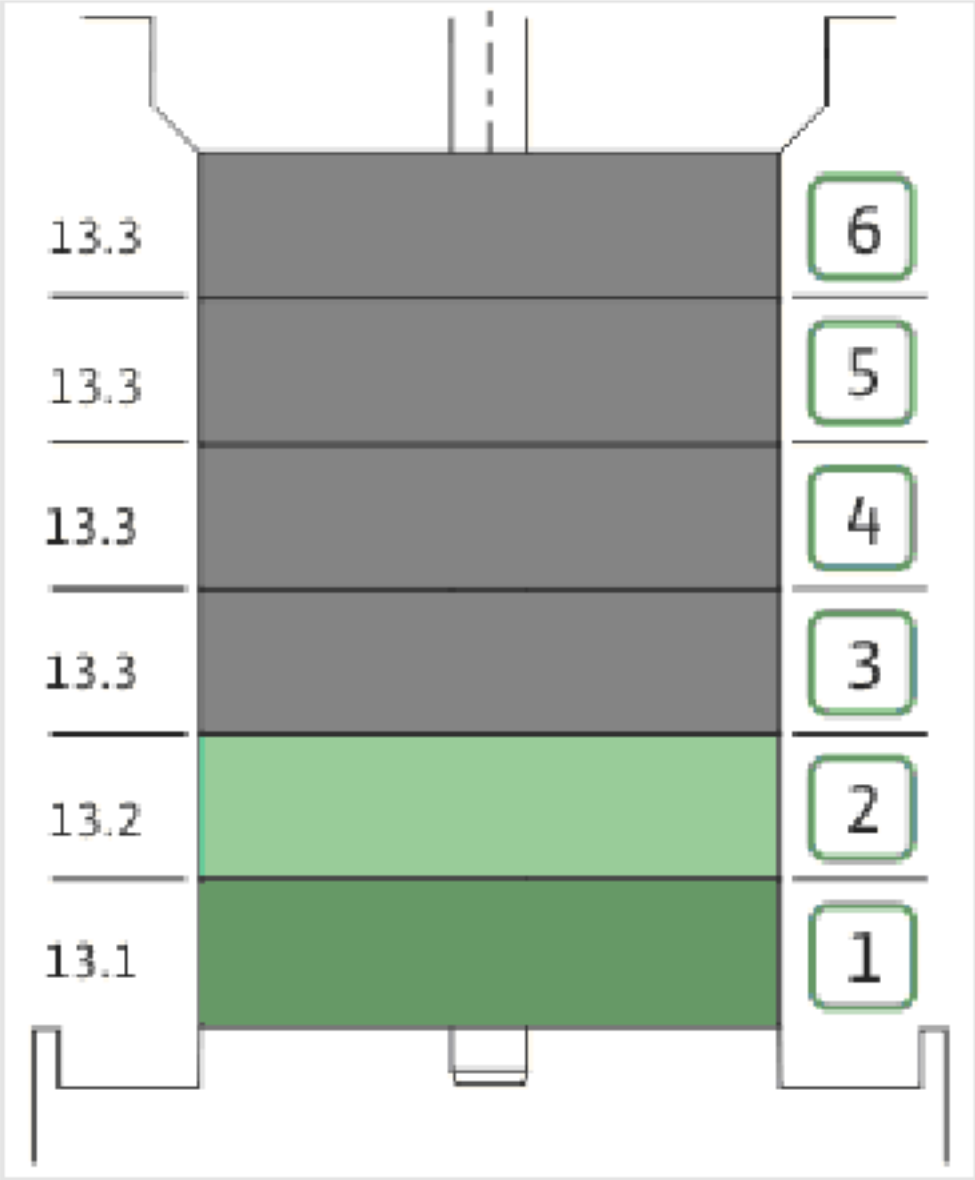
13.3
13.3
13.3
13.3
13.2
13.1
6
5
4
3
2
1

| Item | Article no. | Description | Quantity |
|---|---|---|---|
| 13.1 | 4174084 | STAGE HELIX 6 1.4301 KIT | 1 |
| | | > MACH.STG-CASING-WOGV-WNR-M+6-304 | 1 |
| | | > IMPELLER-M+6-304 | 1 |
| 13.2 | 4174089 | INTERMEDIATE STAGE HELIX 6 1.4301 KIT | 1 |
| | | > MACH.BEARING-STG-CASING-WNR-M+6-304 | 1 |
| | | > IMPELLER-M+6-304 | 1 |
| | | > SHAFT SLEEVE-SPACER-Ø19,35x18,465-304 | 1 |
| | | > SHAFT-SLEEVE-D16xD20x18-CW | 1 |
| 13.3 | 4174090 | INTERMEDIATE STAGE HELIX 6 1.4301 KIT | 1 |
| | | > MACH.STD-STG-CASING-WGV+NR-M+6-304 | 1 |
| | | > IMPELLER-M+6-304 | 1 |
| | | > IMPELLER SPACER Ø16,05X19,45-L36,465-304 | 1 |

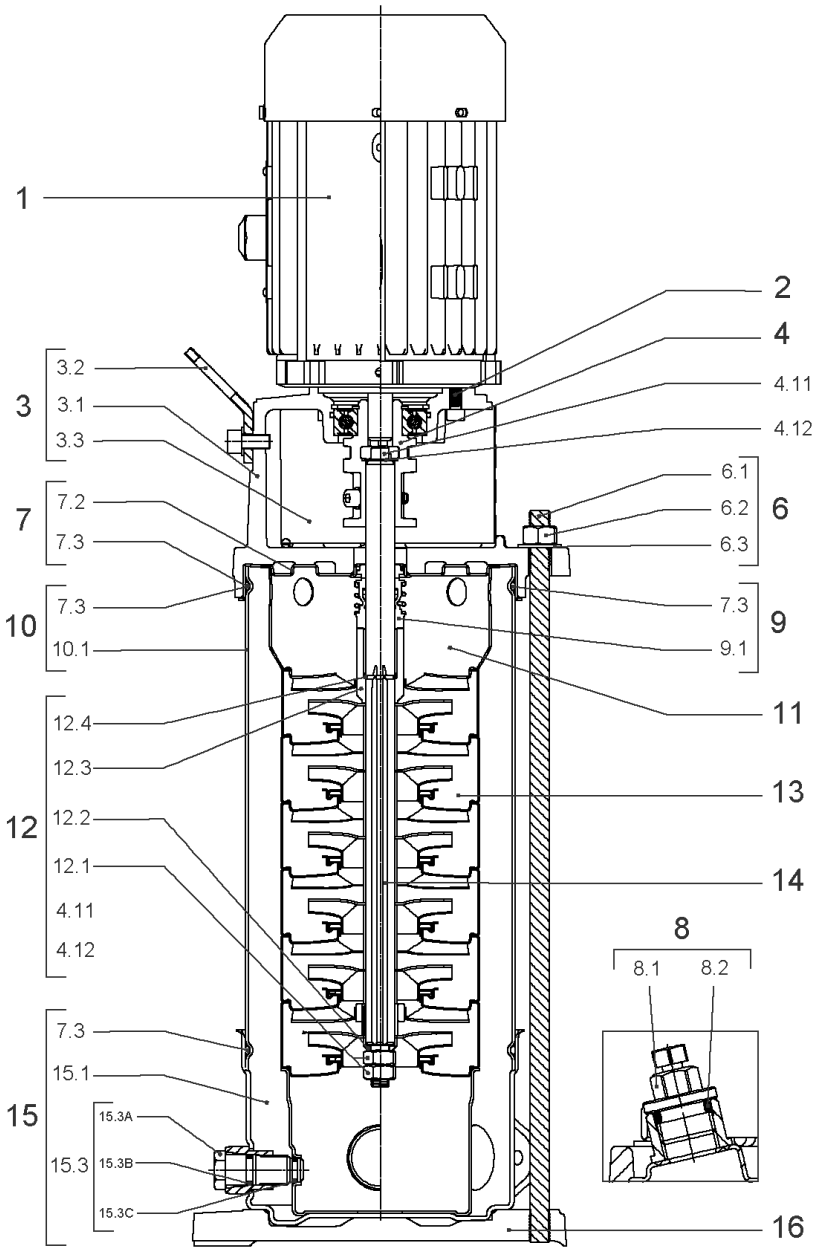
1
2
4
4.11
4.12
3
3.2
3.1
3.3
7
7.2
7.3
10
7.3
10.1
6
6.1
6.2
6.3
9
7.3
9.1
11
12
12.4
12.3
12.2
12.1
4.11
4.12
13
14
8
8.1
8.2
15
7.3
15.1
15.3
15.3A
15.3B
15.3C
16

## HELIX VE606-1/16/E/S (4201583)

| Item | Article no. | Description | Quantity |
|---|---|---|---|
| 1 | | DRIVE HELIX-VE606-IE4-WE KIT | 1 |
| Note: MOTOR BRAND WILO ELEC | | | |
| | | SPARE PARTS MOTOR:ON REQUEST | 1 |
| 2 | 4159707 | SCREW M8X30 (4 PIECES) | 1 |
| 3 | 4213784 | LANTERN FT115 HELIX KIT | 1 |
| 3.1 | | > LANT-MOT-VMI-ReDTC6"-FT115-MACHINED+CATA | 1 |
| 3.2 | 4184852 | > EYELET CPL.FT HELIX (2 PIECES) | 1 |
| 3.3 | 4213782 | > COUPLING PROTECTOR FT115/130 HELIX KIT | 1 |
| 4 | 4159709 | COUPLING D.16xD.24 FT115 HELIX KIT | 1 |
| 6 | 4177822 | STUD BOLT M12X413 KIT | 1 |
| 6.1 | | > TIE BOLT M12-413x18x30-1.4057 | 1 |
| 6.2 | 2094647 | > NUT M12 M12 ISO4032 VP. | 1 |
| 6.3 | 2123557 | > WASHER CS-12.4-24-1.6-NFE25 (4 PIECES) | 1 |
| 7 | 4214481 | STATIONARY RING HOLDER HELIX D27 ReDTC | 1 |
| 7.2 | 4214479 | > STATIONARY RING HOLDER HELIX D27 VP. | 1 |
| 7.3 | 4176513 | > O-RING FOR PUMP JACKET VP. | 1 |
| 8 | 4212724 | FILING/PURGING PLUG HELIX ReDTC KIT | 1 |
| 8.1 | | > FILLING PLUG MVI6"-304 | 1 |
| 8.2 | 4177800 | > O-RING EPDM PLUG HELIX VP. | 1 |
| 9 | 4214483 | MECH.SEAL HELIX6-10-16 O/E ReDTC KIT | 1 |
| 9.1 | 4177801 | > MECH.SEAL HELIX6-10-16 O/E VP. | 1 |
| 7.3 | 4176513 | > O-RING FOR PUMP JACKET VP. | 1 |
| 10 | 4177823 | HOUSING PIPES D.152X285 1.4301 KIT | 1 |
| 7.3 | 4176513 | > O-RING FOR PUMP JACKET VP. | 1 |
| 10.1 | | > HOUSING-PIPE Ø152-M+1006-304 | 1 |
| 11 | 4174087 | CENTERING STAGE-RETURN HELIX6 1.4301VP. | 1 |
| 12 | 4214486 | SHAFT EQUIPMENT HELIX V6 ReDTC KIT | 1 |
| 12.1 | | > NUT-H-M10-A4.70 | 1 |
| 12.2 | | > SERRATED LOCK WASHER M+6M3-316L | 1 |
| 12.3 | | > 1/2-SNAP-RING-6/10M3-316L | 1 |
| 12.4 | | > STOP-RUSH-1/2-D16xd2-M+316 | 1 |
| 4.11 | | > SCREW CHC-M6X14-8.8-ISO4762-GEOMET500A | 1 |
| 4.12 | | > WASHER D.24 L6U ZINK | 1 |
| 13 | | HYDRAULIC HELIX V 606 1.4307 | 1 |

| Item | Article no. | Description | Quantity |
|---|---|---|---|
| 14 | 4214500 | SHAFT D.16X353 HELIX 1.4057 VP. | 1 |
| 15 | 4217897 | PUMP HOUSING HELIX DN32 PN16 1.4301 KIT | 1 |
| 7.3 | 4176513 | > O-RING FOR PUMP JACKET VP. | 1 |
| 15.1 | | > BLASTING PPE HOUSING V-PN16-DN32-5"-304 | 1 |
| 15.2 | 4217891 | > COUNTER FLANGE-G1"1/4-PN16-GJL KIT | 1 |
| 15.3 | 4171321 | > PRIMING/DRAIN PLUG EPDM HELIX KIT | 1 |
| 16 | 4177964 | BASEPLATE HELIX V2/4/6 PN16 VP. | 1 |

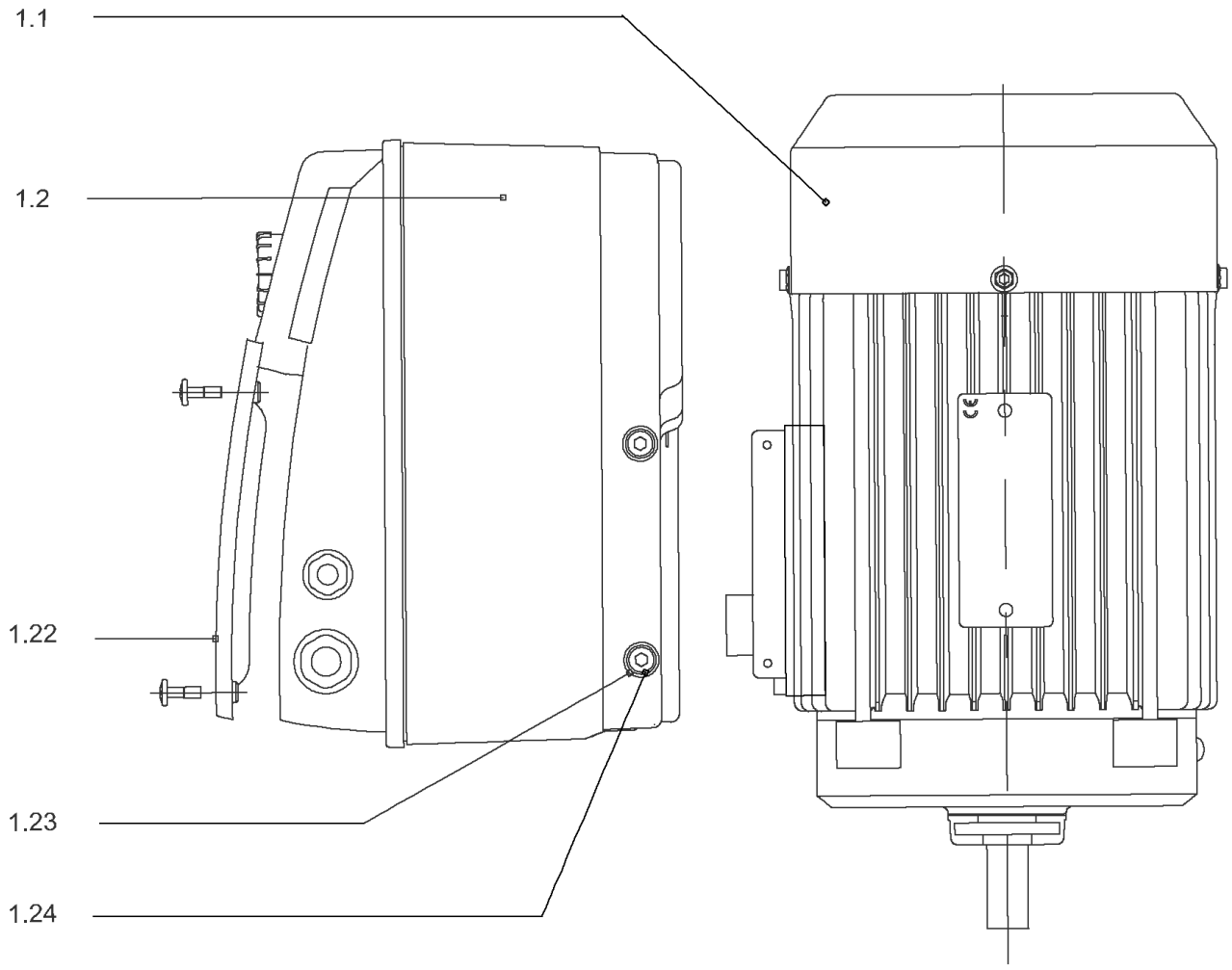
1.1
1.2
1.22
1.23
1.24

## DRIVE HELIX-VE606-IE4-WE KIT

| Item | Article no. | Description | Quantity |
|---|---|---|---|
| 1.1 | 4207920 | MOTOR 2.2/2/90 3~ 380V 60HZ IE4 WE VP. | 1 |
| | | SPARE PARTS MOTOR:ON REQUEST | 1 |
| 1.2 | 4209368 | MODULE HELIX-VE606-IE4-WE KIT | 1 |
| 1.22 | 2054227 | > MODULE COVER/GASKET TL3/4 KIT | 1 |
| 1.23 | 4215716 | > SCREW M5X16 DIN912 8.8 A2A (4pieces) VP. | 1 |
| 1.24 | 2057978 | > RONDELLE A5,3 DIN6797 FST ZN (4 PIECES) | 1 |

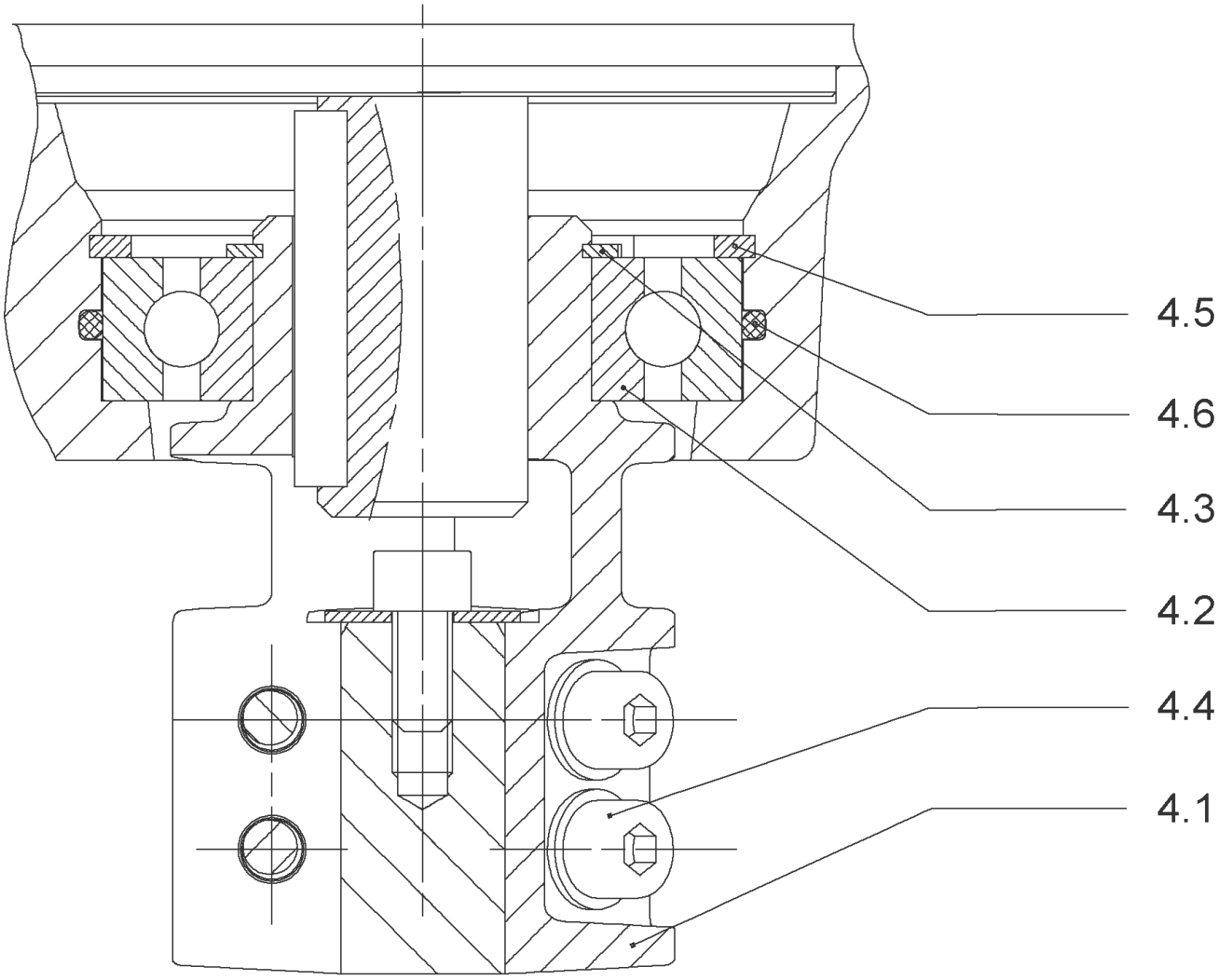
4.5
4.6
4.3
4.2
4.4
4.1

## COUPLING D.16xD.24 FT115 HELIX KIT (4159709)

| Item | Article no. | Description | Quantity |
|---|---|---|---|
| 4.1 | | COUPLING M+ Ø16XØ24 FT115 MACHINED | 1 |
| 4.2 | 2131023 | BALL BEARING 6207/ZZ-C3(HT)VP. | 1 |
| 4.3 | 4234254 | CIRCLIP-FOR-SHAFT-D35x1.5 VP. | 1 |
| 4.4 | 4157726 | SCREW KIT M8X30 (4 PIECES) | 1 |
| 4.5 | 4234251 | CIRCLIP-D72x2.5 VP. | 1 |
| 4.6 | 4234246 | O-RING 72X3 VP. | 1 |
| | | NOMEL CONTACT WASHER 8x16x1,4 STEEL ZC | 1 |

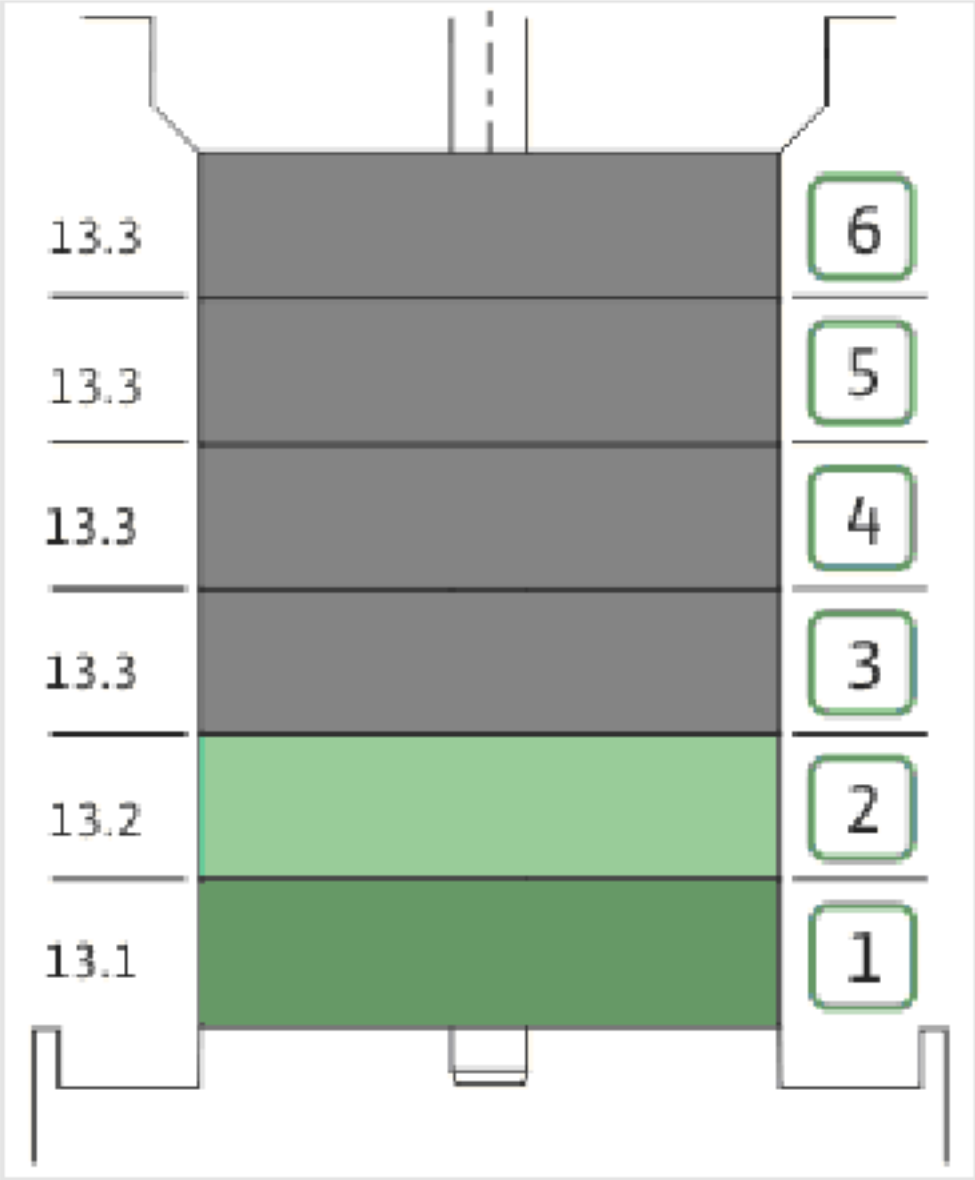
13.3
13.3
13.3
13.3
13.2
13.1
6
5
4
3
2
1

| Item | Article no. | Description | Quantity |
|---|---|---|---|
| 13.1 | 4174084 | STAGE HELIX 6 1.4301 KIT | 1 |
| | | > MACH.STG-CASING-WOGV-WNR-M+6-304 | 1 |
| | | > IMPELLER-M+6-304 | 1 |
| 13.2 | 4174089 | INTERMEDIATE STAGE HELIX 6 1.4301 KIT | 1 |
| | | > MACH.BEARING-STG-CASING-WNR-M+6-304 | 1 |
| | | > IMPELLER-M+6-304 | 1 |
| | | > SHAFT SLEEVE-SPACER-Ø19,35x18,465-304 | 1 |
| | | > SHAFT-SLEEVE-D16xD20x18-CW | 1 |
| 13.3 | 4174090 | INTERMEDIATE STAGE HELIX 6 1.4301 KIT | 1 |
| | | > MACH.STD-STG-CASING-WGV+NR-M+6-304 | 1 |
| | | > IMPELLER-M+6-304 | 1 |
| | | > IMPELLER SPACER Ø16,05X19,45-L36,465-304 | 1 |

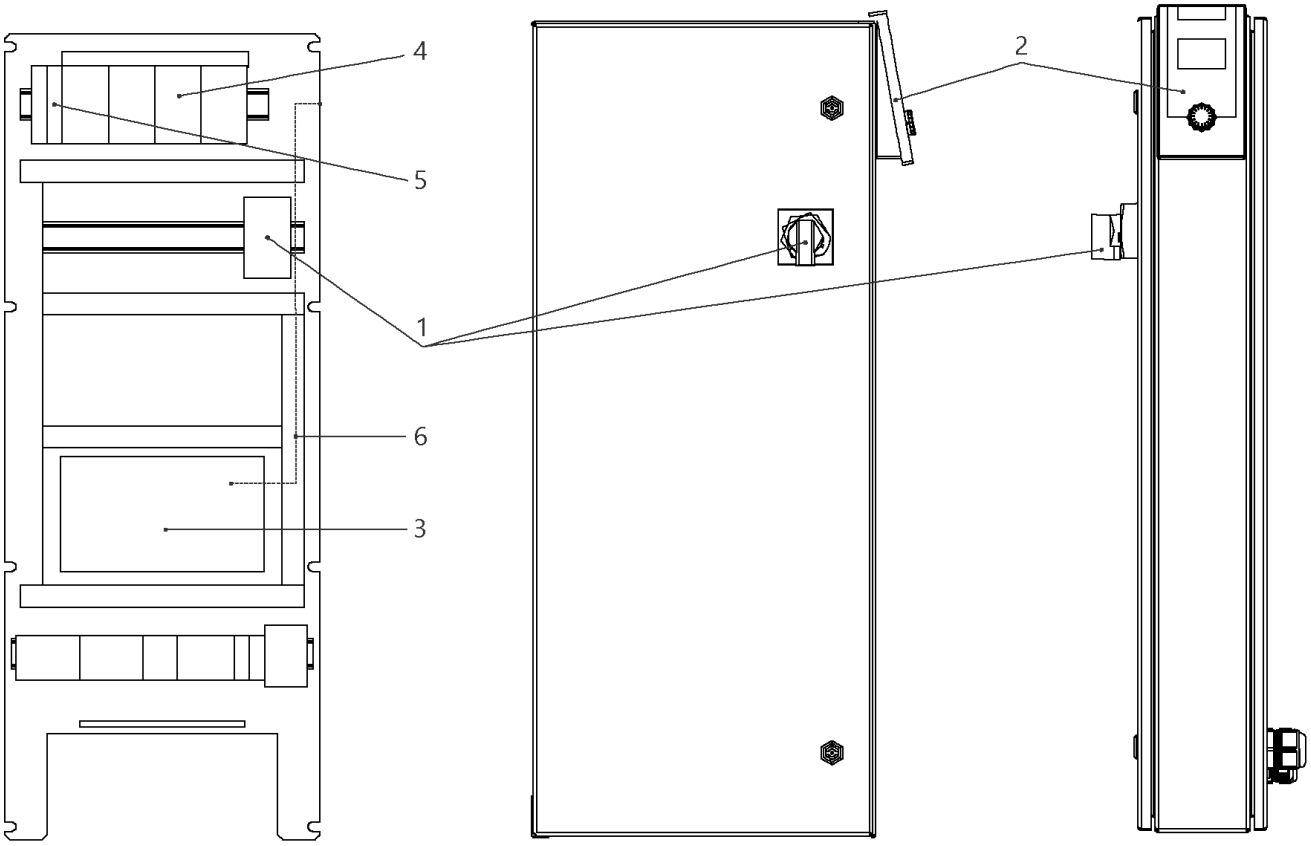
4
5
1
6
3
2

## W-CTRL-SCE-B-4x2,2KW-T4-FM-ND2

| Item | Article no. | Description | Quantity |
|---|---|---|---|
| 1 | 2104473 | MAIN SWITCH OT63F3 L105 KIT | 1 |
| 2 | 4184784 | CONTROL PANEL HMI SC KIT | 1 |
| 2 | 4185259 | ASSEMBLY DISPLAY SC PKG VP. | 1 |
| 3 | 4185257 | ASSEMBLY CPU SCe Booster VP. | 1 |
| 4 | 2051217 | AUTOM.CIRCUIT BREAKER S203 B16 TO7,5kW | 1 |
| 5 | 2046288 | CIRCUIT BREAKER S201 B16 | 1 |
| 6 | 4194956 | PATCH CABLE RJ45 CAT6 1,0M BLUE SC-PANEL | 1 |

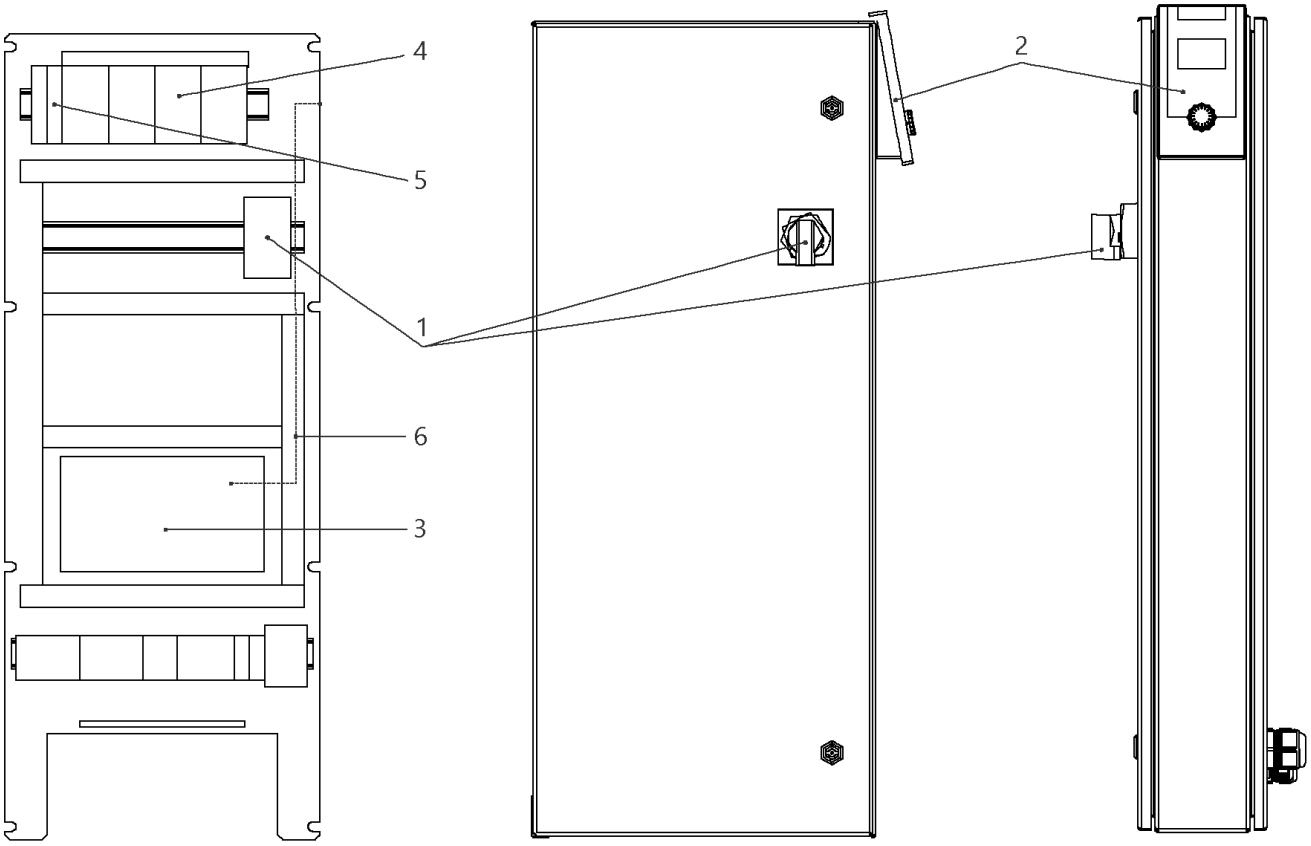
4
5
1
6
3
2

## W-CTRL-SCE-B-4x2,2-3,0KW-T4-FM-ND1

| Item | Article no. | Description | Quantity |
|---|---|---|---|
| 1 | 2104473 | MAIN SWITCH OT63F3 L105 KIT | 1 |
| 2 | 4184784 | CONTROL PANEL HMI SC KIT | 1 |
| 2 | 4185259 | ASSEMBLY DISPLAY SC PKG VP. | 1 |
| 3 | 4185257 | ASSEMBLY CPU SCe Booster VP. | 1 |
| 4 | 2051217 | AUTOM.CIRCUIT BREAKER S203 B16 TO7,5kW | 1 |
| 5 | 2046288 | CIRCUIT BREAKER S201 B16 | 1 |
| 6 | 4197081 | CABLE RJ45 CAT6 0,5M RED SC-PANEL VP. | 1 |

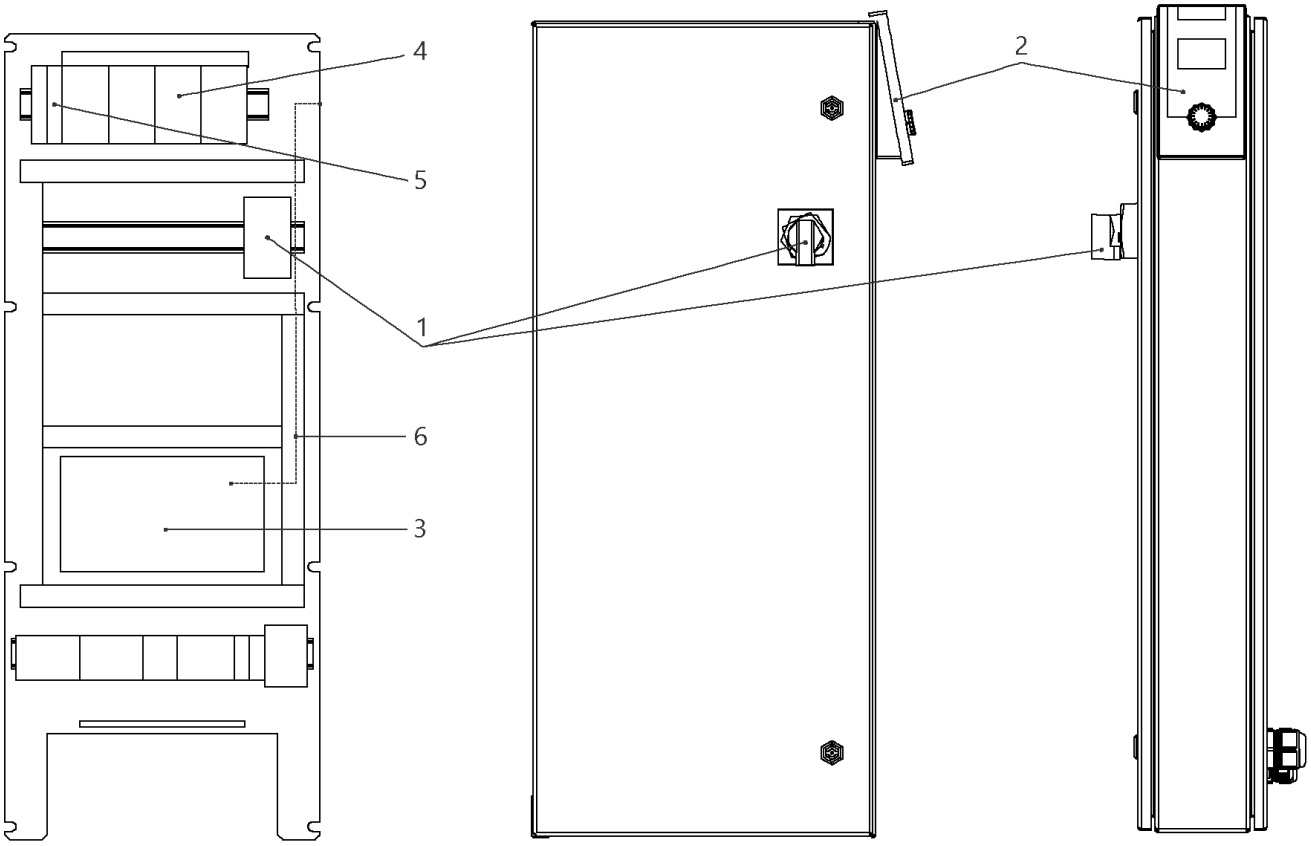
4
5
1
6
3
2

## W-CTRL-SCE-B-4x10A-T34-FM-ND1-AVC-PKG (2541915)

| Item | Article no. | Description | Quantity |
|---|---|---|---|
| 1 | 2104473 | MAIN SWITCH OT63F3 L105 KIT | 1 |
| 2 | 4184784 | CONTROL PANEL HMI SC KIT | 1 |
| 2 | 4185259 | ASSEMBLY DISPLAY SC PKG VP. | 1 |
| Note: DISPLAY ALONE / PLATINE SEULE | | | |
| 3 | 4185257 | ASSEMBLY CPU SCe Booster VP. | 1 |
| 5 | 2046288 | CIRCUIT BREAKER S201 B16 | 1 |
| 4 | 2119861 | AUTOMATIC CIRCUIT BREAKER S203 B13 3POL. | 1 |
| 6 | 4197081 | CABLE RJ45 CAT6 0,5M RED SC-PANEL VP. | 1 |

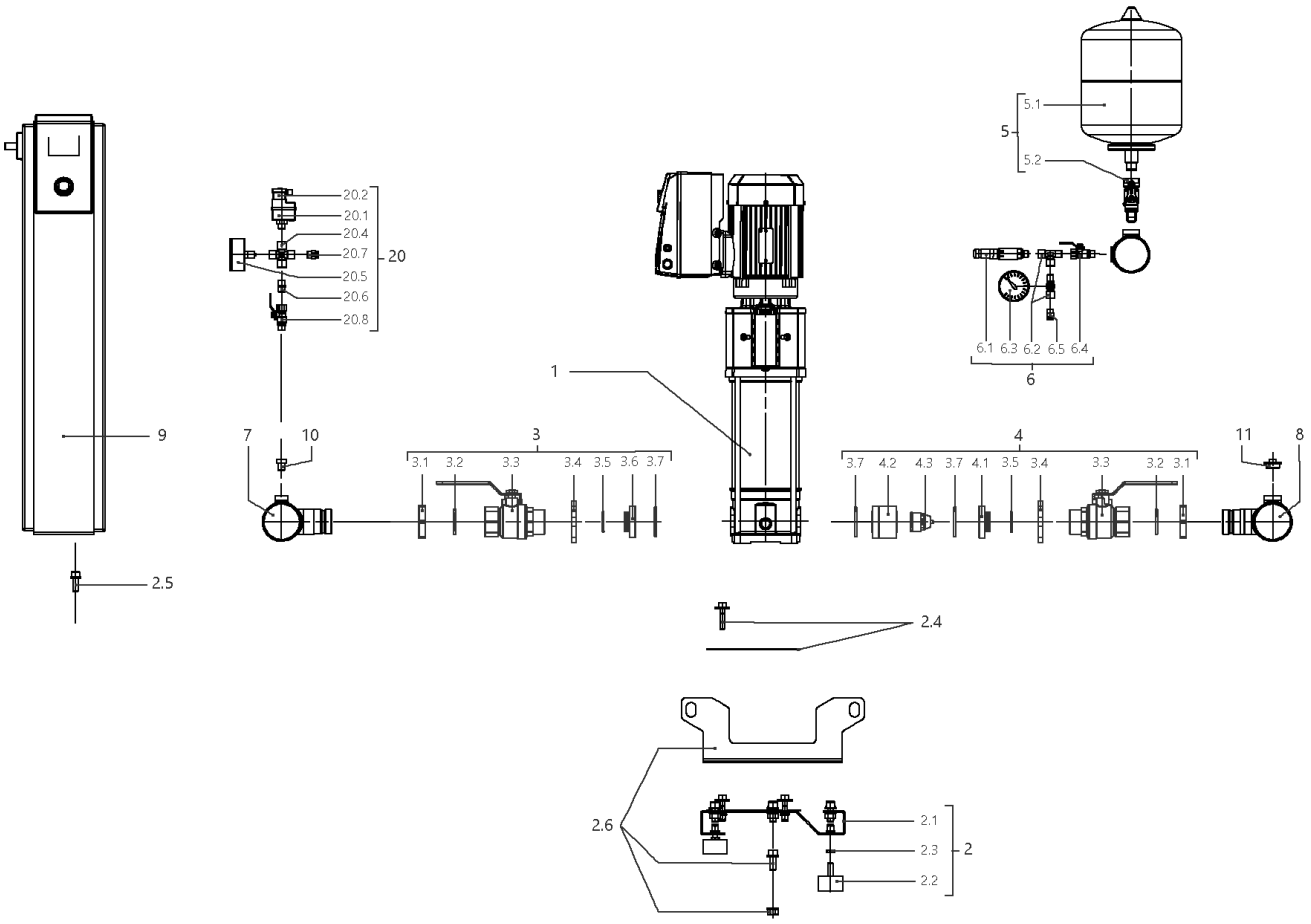
5.1
5
5.2
20.2
20.1
20.4
20.7
20
20.5
20.6
20.8
6.1 6.3 6.2 6.5 6.4
6
1
9
7
10
3
3.1 3.2 3.3 3.4 3.5 3.6 3.7
4
3.7 4.2 4.3 3.7 4.1 3.5 3.4 3.3 3.2 3.1
11
8
2.5
2.4
2.6
2.1
2.3
2
2.2

## SiBoost Smart 4HELIX VE608 (2537350)

| Item | Article no. | Description | Quantity |
|---|---|---|---|
| 1 | | HELIX VE608-1/16/E/S | 1 |
| Note: TO / BIS / JUSQU'AU 30/04/2016 | | | |
| 1 | 4201585 | HELIX VE608-1/16/E/S | 1 |
| Note: FROM / AB / À PARTIR DU 01/05/2016 | | | |
| 2 | 4200146 | BASE PLATE DE4 1450x420 KIT | 1 |
| 2.1 | | > BASEPLATE_4x4/6/10/16V_E300_BOX_150 | 1 |
| 2.2 | 2028654 | > VIBRATION DAMPER D.50X30 M10X28 | 1 |
| 2.3 | 2028281 | > NUT M10 DIN936 (ISO4035) 17H VZ | 1 |
| 2.4 | 4199875 | > HOLDER PUMP Siboost Helix V2/4 KIT | 1 |
| 2.5 | 4197084 | > HOLDER SWITCHBOX WILO Smart Control KIT | 1 |
| 2.6 | 4197117 | > LIFTING Siboost HELIX SC KIT | 1 |
| 3 | 4199876 | SUCTION SIDE Siboost Helix V2/4/6 KIT | 1 |
| 3.1 | 2032610 | > NUT G11/4 MS VP. | 1 |
| 3.2 | 2032611 | > O-RING ID.36,09X3,53N DIN3771 E7502 | 1 |
| 3.3 | 2507646 | > BALL VALVE G11/4"M-F-W.HANDLE 1/4-TURN | 1 |
| 3.4 | 2032613 | > SCREWED FLANGE G1 1/4" LK-75 ST37VZ | 1 |
| 3.5 | 2032614 | > O-RING ID.29,82X2,62N DIN3771 E7502 | 1 |
| 3.6 | 2032615 | > SPACER F.I/A KUH.DN32 CUZN | 1 |
| 3.7 | 2032616 | > O-RING ID.44X3,53N DIN3771 E7502 | 1 |
| 4 | 4199877 | DELIVERY SIDE Siboost Helix V2/4/6 KIT | 1 |
| 3.1 | 2032610 | > NUT G11/4 MS VP. | 1 |
| 3.2 | 2032611 | > O-RING ID.36,09X3,53N DIN3771 E7502 | 1 |
| 3.3 | 2507646 | > BALL VALVE G11/4"M-F-W.HANDLE 1/4-TURN | 1 |
| 3.4 | 2032613 | > SCREWED FLANGE G1 1/4" LK-75 ST37VZ | 1 |
| 3.5 | 2032614 | > O-RING ID.29,82X2,62N DIN3771 E7502 | 1 |
| 4.1 | 2058116 | > SPACER F.I/A KUH.DN32 CUZN | 1 |
| 3.7 | 2032616 | > O-RING ID.44X3,53N DIN3771 E7502 | 1 |
| 4.2 | 2058115 | > HOUSING RFV(RV-IN) DN32 SGS/DRS | 1 |
| 4.3 | 2027870 | > NON-RETURN-DEVICE INSERT DN32(MTR) | 1 |
| 5 | 2032642 | DIAPHREM TANK 8L/PN16 DIN4807/T5 KIT | 1 |
| 5.1 | 2045914 | > DIAPHREM TANK 8L TYP-DD 16BAR | 1 |
| 5.2 | 2027853 | > FLOW FITTING G3/4 FOR DIAPHRAGM VES. | 1 |
| 6 | 4197076 | PRESSURE SENSOR/ GAUGE 0-16BAR KIT | 1 |
| 6.1 | 2085909 | > PRESS.SENSOR 1/4" 0-16BAR 4-20MA VP. | 1 |

| Item | Article no. | Description | Quantity |
|---|---|---|---|
| 6.2 | 4197077 | > T-PIECE 1/4" VP. | 1 |
| 6.3 | 2028692 | > PRESSURE GAUGE NG63-PN16-G1/4 | 1 |
| 6.4 | 2028291 | > BALL TAP R1/4" PN42 GIACOMINI R254DL | 1 |
| 6.5 | 2028691 | > BLOWGUN 1/4" MS 30BAR VP. | 1 |
| 7 | 4200144 | PIPE DE4 21/2''-4x11/4"+2x1/4x900 VP. | 1 |
| 8 | 4200145 | PIPE DE4 21/2''-4x11/4"+2x1/4+1x3/4x900 | 1 |
| 9 | | W-CTRL-SCE-B-4x4,0KW-T4-FM-ND2 | 1 |
| Note: TO / BIS / JUSQU'AU 18/05/2014 | | | |
| 9 | 2541907 | W-CTRL-SCE-B-4x13A-T34-FM-ND2-AVC-PKG | 1 |
| Note: FROM / AB / À PARTIR DU 19/05/2014 | | | |
| 10 | 4197079 | PLUG G1/4"x10 AISI304 KIT | 1 |
| 11 | 2032654 | PLUG R3/4" MS VIEGA 1751 | 1 |
| 20 | | ASSEMBLY WMS. DE-EB. +VP | 1 |
| 20.1 | 2028652 | > PRESSURE SWITCH PS3-ASR 1/(1,3) VP. | 1 |
| 20.2 | 2130983 | > PLUG PS3-415 WITH KABEL 1,5M 2NO VP. | 1 |
| 20.4 | 2028290 | > CROSSPIECE R1/4" MS-NICKEL | 1 |
| 20.5 | 2028687 | > PRESSURE GAUGE NG63 R1/4" HI.0-6BAR | 1 |
| 20.6 | 2054268 | > DUAL NIPPLE G1/4" x G1/4" MS VP. | 1 |
| 20.7 | 2028691 | > BLOWGUN 1/4" MS 30BAR VP. | 1 |
| 20.8 | 2028291 | > BALL TAP R1/4" PN42 GIACOMINI R254DL | 1 |

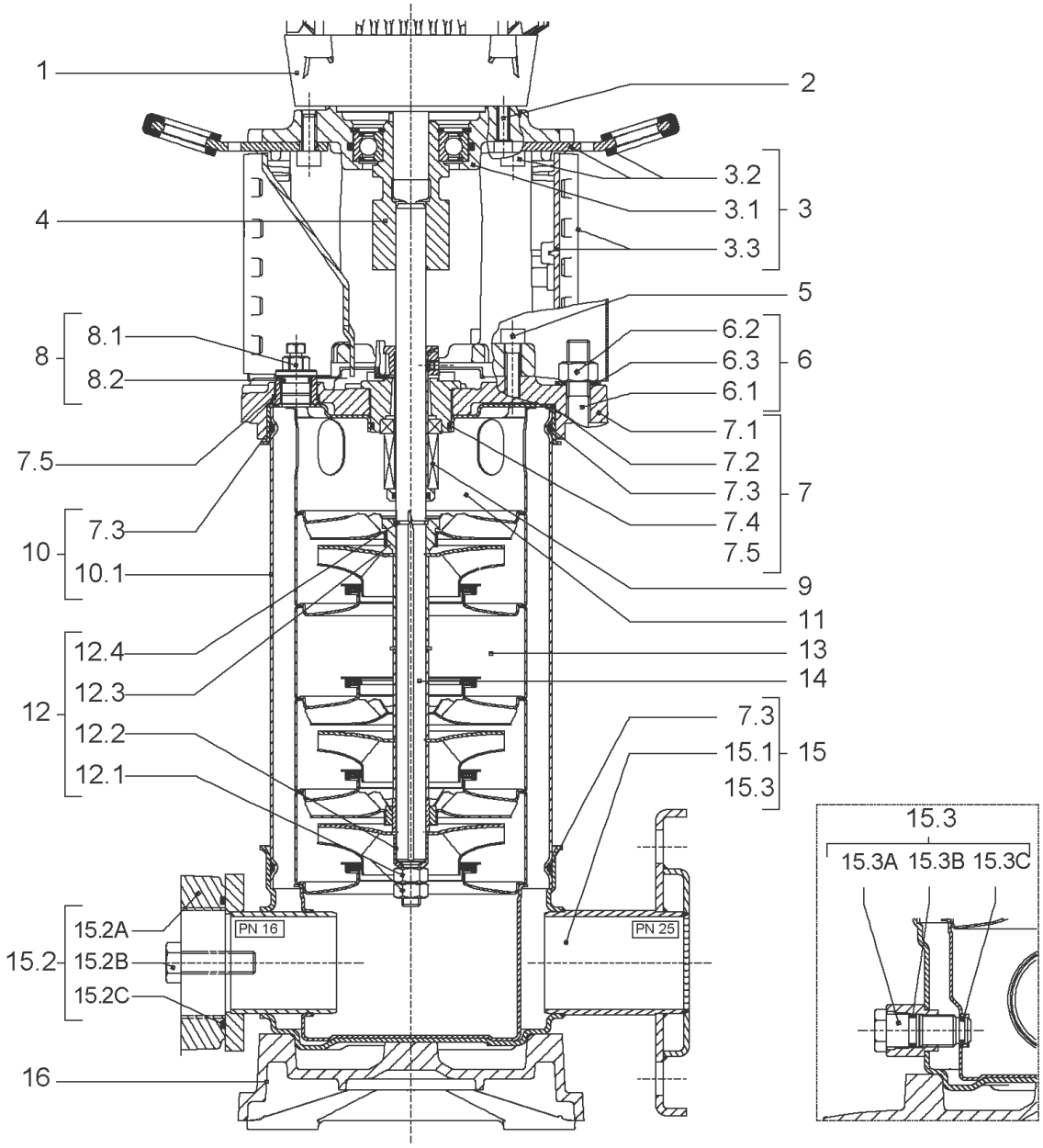
1
2
3.2
3.1
3
3.3
4
5
8.1
8
8.2
6.2
6.3
6
6.1
7.1
7.5
7.2
7.3
7
7.4
7.3
10
7.5
10.1
9
11
12.4
13
12.3
14
12
12.2
7.3
15.1
15
12.1
15.3
15.3
15.3A 15.3B 15.3C
15.2A
PN 16
PN 25
15.2
15.2B
15.2C
16

| Item | Article no. | Description | Quantity |
|---|---|---|---|
| 1 | | DRIVE HELIX-VE608IE2-WE KIT | 1 |
| Note: MOTOR BRAND WILO ELEC | | | |
| 1 | | DRIVE HELIX-VE608-IE4-WE KIT | 1 |
| Note: MOTOR BRAND WILO ELEC | | | |
| 2 | 4206025 | SCREW M8X45 (4 PIECES) | 1 |
| 3 | 4172789 | LANTERN FT130 HELIX V10 KIT | 1 |
| 3.1 | | > M+5_6_LANTERN_ONE-PIECE_FT130_CATA | 1 |
| 3.2 | 2127604 | > EYELET CPL.FT HELIX(2 PIECES) | 1 |
| 3.3 | 4159692 | > COUPLING PROTECTOR FT HELIX KIT | 1 |
| 4 | 4159710 | COUPLING D.16XD.28 FT130 HELIX KIT | 1 |
| 5 | 4159707 | SCREW M8X30 (4 PIECES) | 1 |
| 6 | 2127555 | STUD BOLT M12X485 KIT | 1 |
| 7 | 4210143 | STATIONARY RING HOLDER HELIX 6" EPDM | 1 |
| 7.2 | 2127607 | > STATIONARY RING HOLDER 6" HELIX 1.4301 V | 1 |
| 7.3 | 4176513 | > O-RING FOR PUMP JACKET VP. | 1 |
| 7.4 | 2127603 | > O-RING ID.37,6x2,4 EPDM VP. | 1 |
| 7.5 | 2127602 | > O-RING ID.21,35x2 EPDM VP. | 1 |
| 8 | 4159686 | FILING/PURGING PLUG HELIX EPDM KIT | 1 |
| 9 | 4171327 | SEAL-KIT-HELIX6-10-16 O/E KIT | 1 |
| 10 | 2127578 | HOUSING PIPE D.152x360 1.4307 KIT | 1 |
| 7.3 | 4176513 | > O-RING FOR PUMP JACKET VP. | 1 |
| 10.1 | | > HOUSING-PIPE Ø152-M+1008/1606-304 | 1 |
| 11 | 4174087 | CENTERING STAGE-RETURN HELIX6 1.4301VP. | 1 |
| 12 | 4174086 | SHAFTS EQUIPMENT HELIX V6 MONOBLOC KIT | 1 |
| 12.1 | | > NUT-H-M10-A4.70 | 1 |
| 12.2 | | > SERRATED LOCK WASHER M+6M3-316L | 1 |
| 12.3 | | > IMPELLER STOP RING L33,2-304 | 1 |
| 12.4 | | > STOP-RUSH-1/2-D16xd2-M+316 | 1 |
| 13 | | HYDRAULIC HELIX V 608 1.4307 | 1 |
| 14 | 4177829 | SHAFT Ø16 X480 1.4301 VP. | 1 |
| 15 | 4217897 | PUMP HOUSING HELIX DN32 PN16 1.4301 KIT | 1 |
| 7.3 | 4176513 | > O-RING FOR PUMP JACKET VP. | 1 |
| 15.1 | | > BLASTING PPE HOUSING V-PN16-DN32-5"-304 | 1 |
| 15.2 | 4217891 | > COUNTER FLANGE-G1"1/4-PN16-GJL KIT | 1 |

| Item | Article no. | Description | Quantity |
|---|---|---|---|
| 15.3 | 4171321 | > PRIMING/DRAIN PLUG EPDM HELIX KIT | 1 |
| 16 | 4177964 | BASEPLATE HELIX V2/4/6 PN16 VP. | 1 |

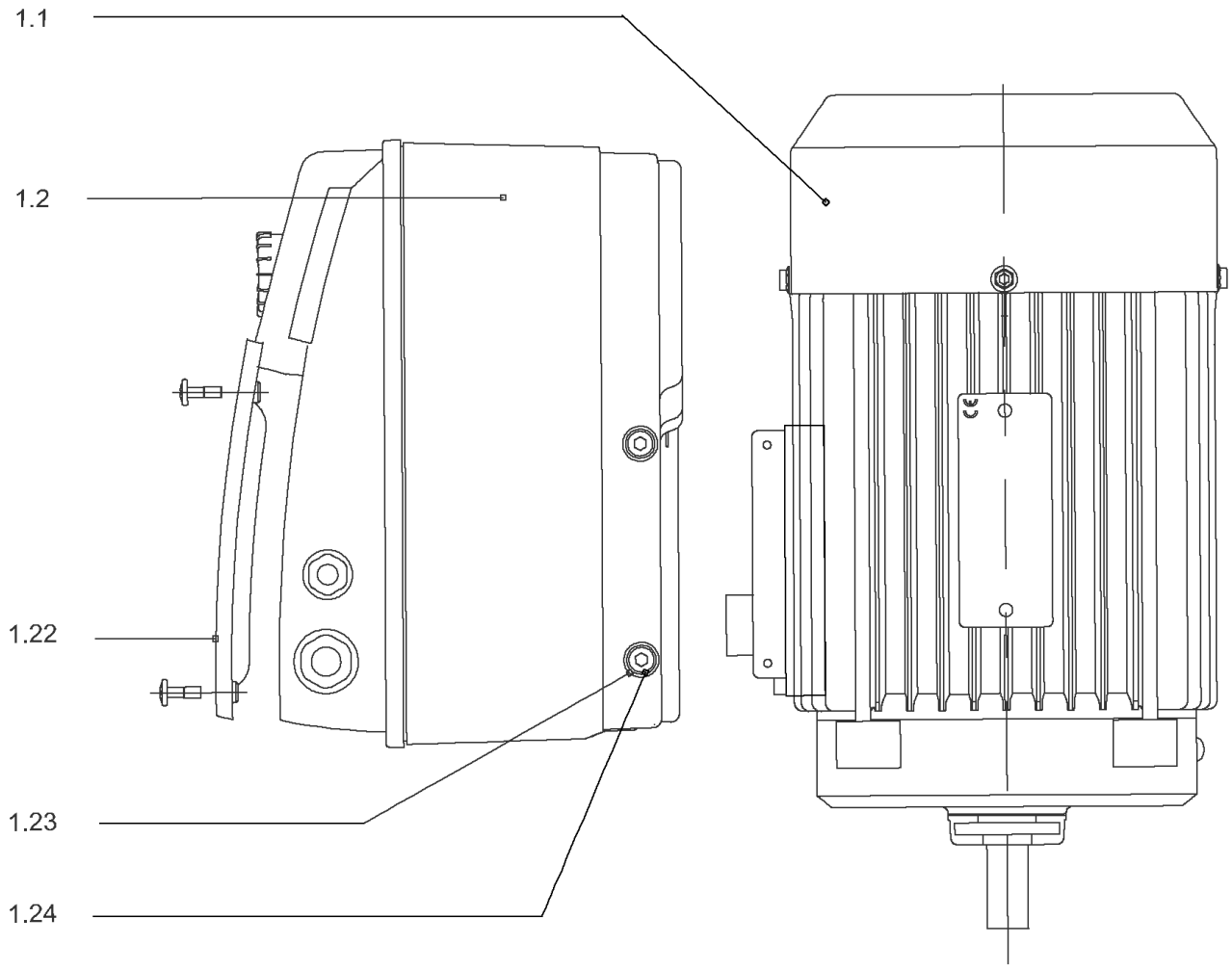
1.1
1.2
1.22
1.23
1.24

## DRIVE HELIX-VE608IE2-WE KIT

| Item | Article no. | Description | Quantity |
|---|---|---|---|
| 1.1 | | M3-T638P55V18H-100F13-SU-N28-WE-IE2 VP. | 1 |
| Note: no longer available/nicht mehrlieferbar/n'est plus disponible | | | |
| | | SPARE PARTS MOTOR:ON REQUEST | 1 |
| 1.2 | 4186331 | MODULE HELIX-VE608-IE2-WE KIT | 1 |
| 1.22 | 2054227 | > MODULE COVER/GASKET TL3/4 KIT | 1 |
| 1.23 | 4215716 | > SCREW M5X16 DIN912 8.8 A2A (4pieces) VP. | 1 |
| 1.24 | 2057978 | > RONDELLE A5,3 DIN6797 FST ZN (4 PIECES) | 1 |

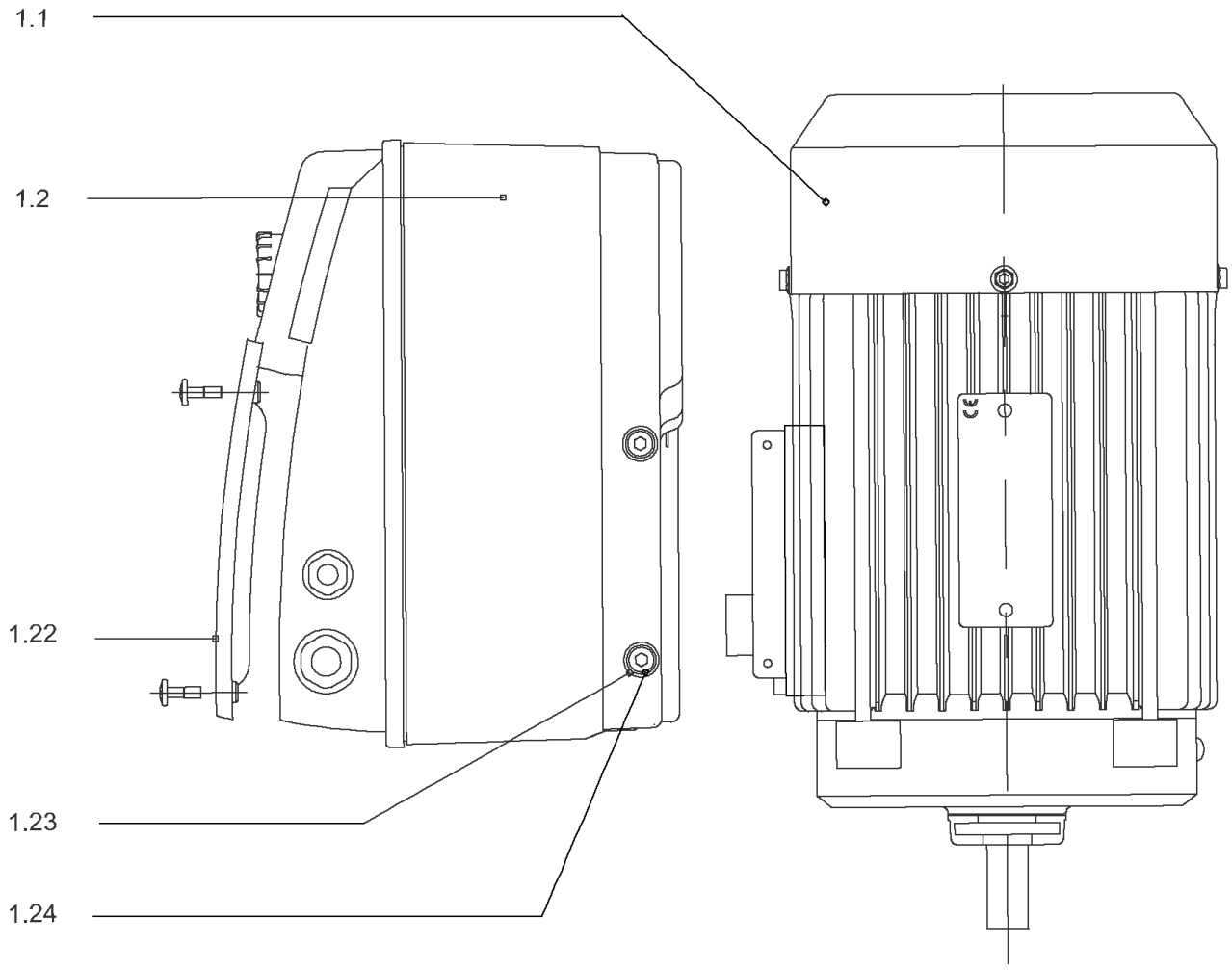
1.1
1.2
1.22
1.23
1.24

## DRIVE HELIX-VE608-IE4-WE KIT

| Item | Article no. | Description | Quantity |
|---|---|---|---|
| 1.1 | 4207922 | MOTOR 3/2/100 3~ 380V 60HZ IE4 WE VP. | 1 |
| | | SPARE PARTS MOTOR:ON REQUEST | 1 |
| 1.2 | 4209338 | MODULE HELIX-VE608-IE4-WE KIT | 1 |
| 1.22 | 2054227 | > MODULE COVER/GASKET TL3/4 KIT | 1 |
| 1.23 | 4215716 | > SCREW M5X16 DIN912 8.8 A2A (4pieces) VP. | 1 |
| 1.24 | 2057978 | > RONDELLE A5,3 DIN6797 FST ZN (4 PIECES) | 1 |

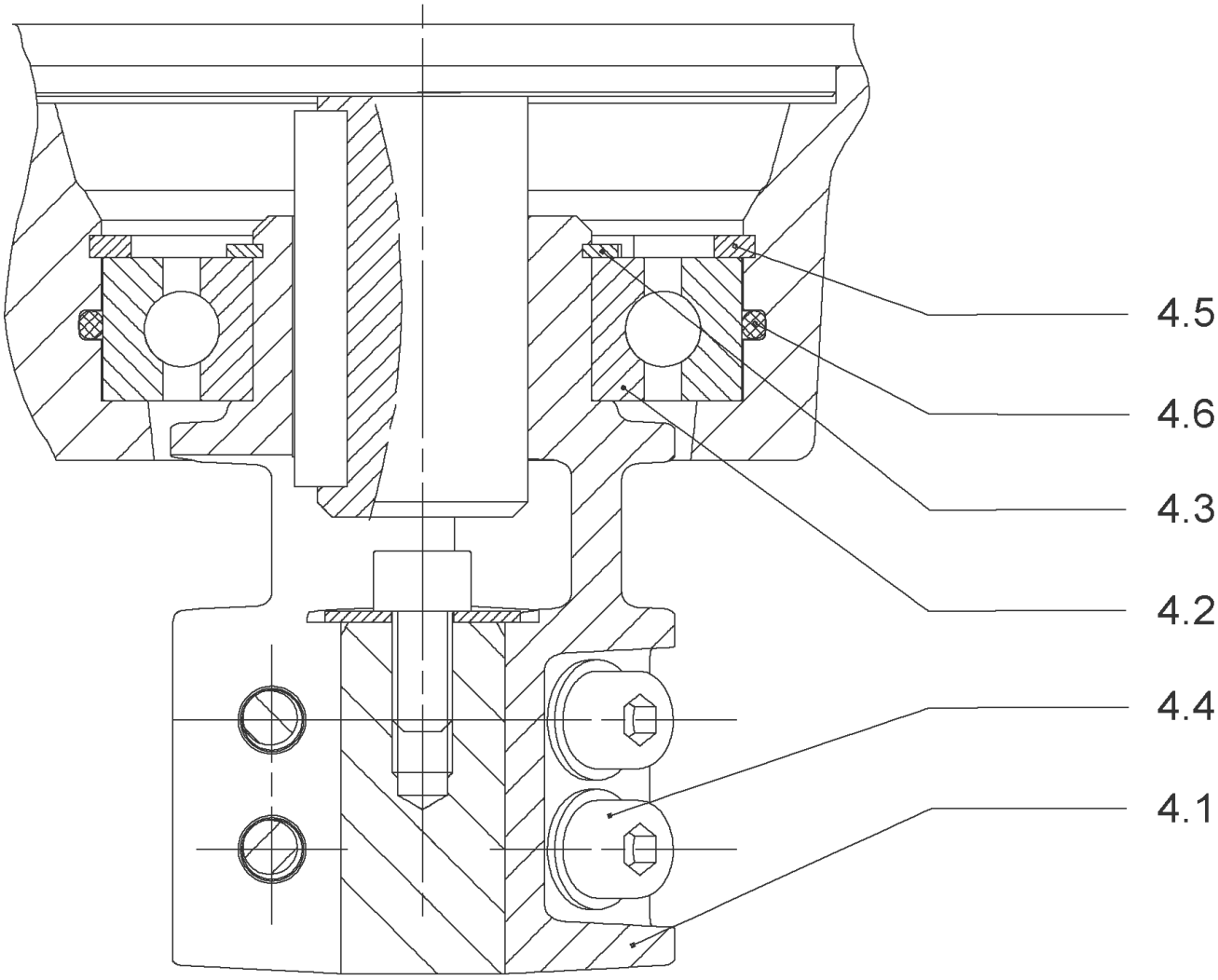
4.5
4.6
4.3
4.2
4.4
4.1

## COUPLING D.16XD.28 FT130 HELIX KIT (4159710)

| Item | Article no. | Description | Quantity |
|---|---|---|---|
| 4.1 | | COUPLING M+ Ø16XØ28 FT130 MACHINED | 1 |
| 4.2 | 2131022 | BALL BEARING 6209/ZZ-C3(HT)VP. | 1 |
| 4.3 | 4233930 | CIRCLIP-FOR-BORES-D45x1,75 VP. | 1 |
| 4.4 | 4157726 | SCREW KIT M8X30 (4 PIECES) | 1 |
| 4.5 | 4234252 | CIRCLIPS 85X3 VP. | 1 |
| 4.6 | 4234243 | O-RING 85X3 VP. | 1 |
| | | NOMEL CONTACT WASHER 8x16x1,4 STEEL ZC | 1 |

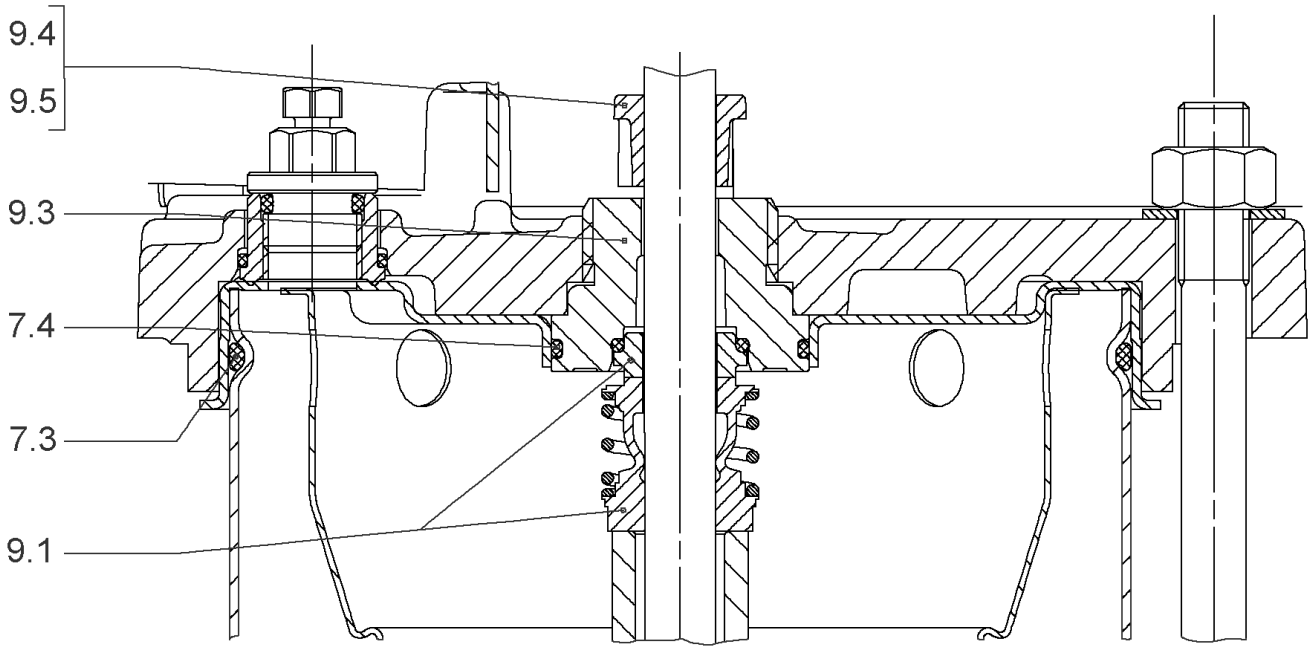
9.4
9.5
9.3
7.4
7.3
9.1

## SEAL-KIT-HELIX6-10-16 O/E KIT (4171327)

| Item | Article no. | Description | Quantity |
|---|---|---|---|
| 7.3 | 4176513 | O-RING FOR PUMP JACKET VP. | 1 |
| 7.4 | 2127603 | O-RING ID.37,6x2,4 EPDM VP. | 1 |
| 9.1 | 4177801 | MECH.SEAL HELIX6-10-16 O/E VP. | 1 |
| 9.3 | 4177798 | MACHINED RING HOLDER M+6" Ø16 304 VP. | 1 |
| 9.5 | 4177799 | MACHINED DRIVE RING Ø16 VP. | 1 |
| 9.4 | 4176520 | SCREW CH M5x5 A4-70 ( 3PIECES ) | 1 |

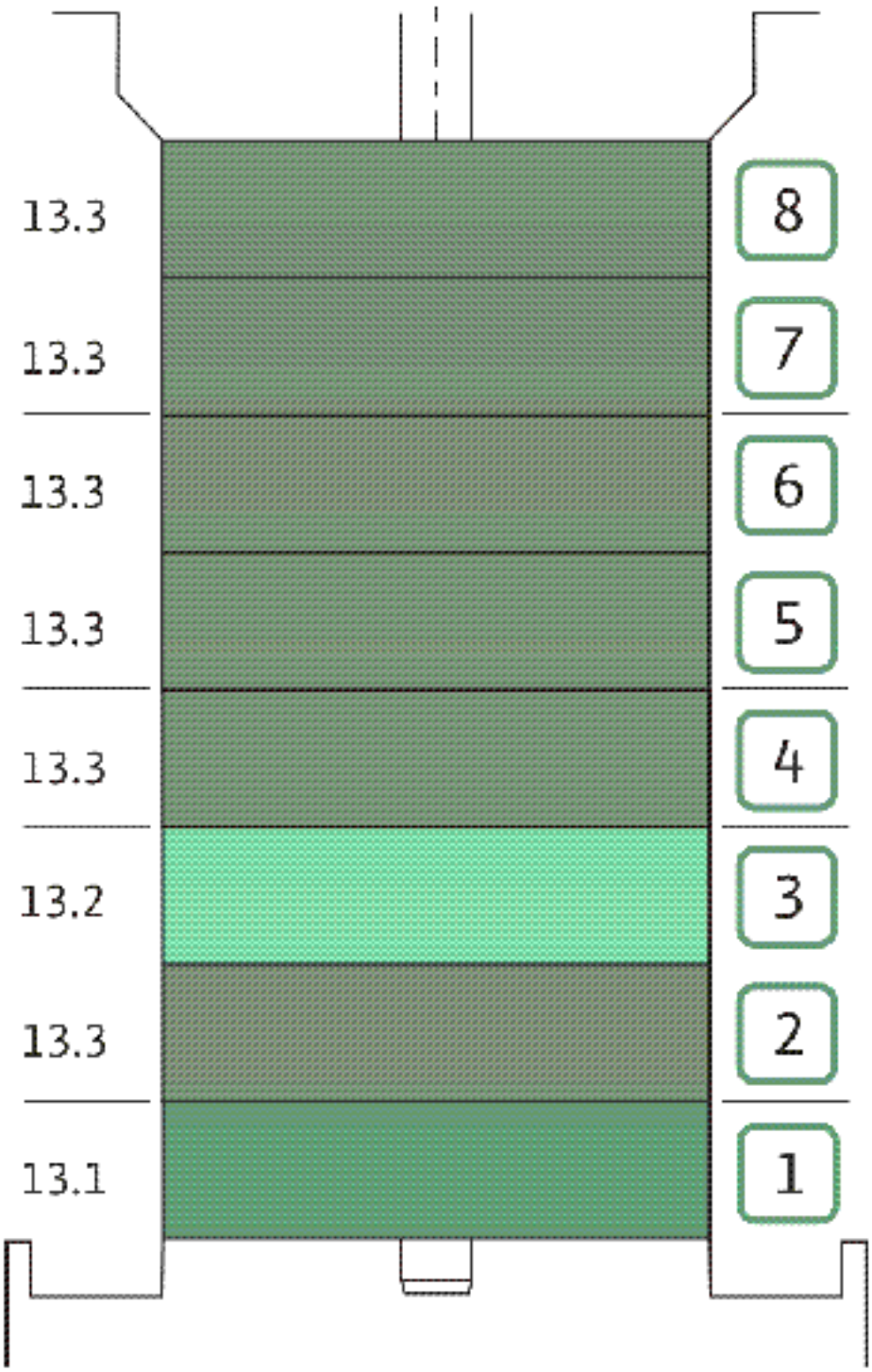
13.3
13.3
13.3
13.3
13.3
13.2
13.3
13.1
8
7
6
5
4
3
2
1

| Item | Article no. | Description | Quantity |
|---|---|---|---|
| 13.1 | 4174084 | STAGE HELIX 6 1.4301 KIT | 1 |
| | | > MACH.STG-CASING-WOGV-WNR-M+6-304 | 1 |
| | | > IMPELLER-M+6-304 | 1 |
| 13.2 | 4174089 | INTERMEDIATE STAGE HELIX 6 1.4301 KIT | 1 |
| | | > MACH.BEARING-STG-CASING-WNR-M+6-304 | 1 |
| | | > IMPELLER-M+6-304 | 1 |
| | | > SHAFT SLEEVE-SPACER-Ø19,35x18,465-304 | 1 |
| | | > SHAFT-SLEEVE-D16xD20x18-CW | 1 |
| 13.3 | 4174090 | INTERMEDIATE STAGE HELIX 6 1.4301 KIT | 1 |
| | | > MACH.STD-STG-CASING-WGV+NR-M+6-304 | 1 |
| | | > IMPELLER-M+6-304 | 1 |
| | | > IMPELLER SPACER Ø16,05X19,45-L36,465-304 | 1 |

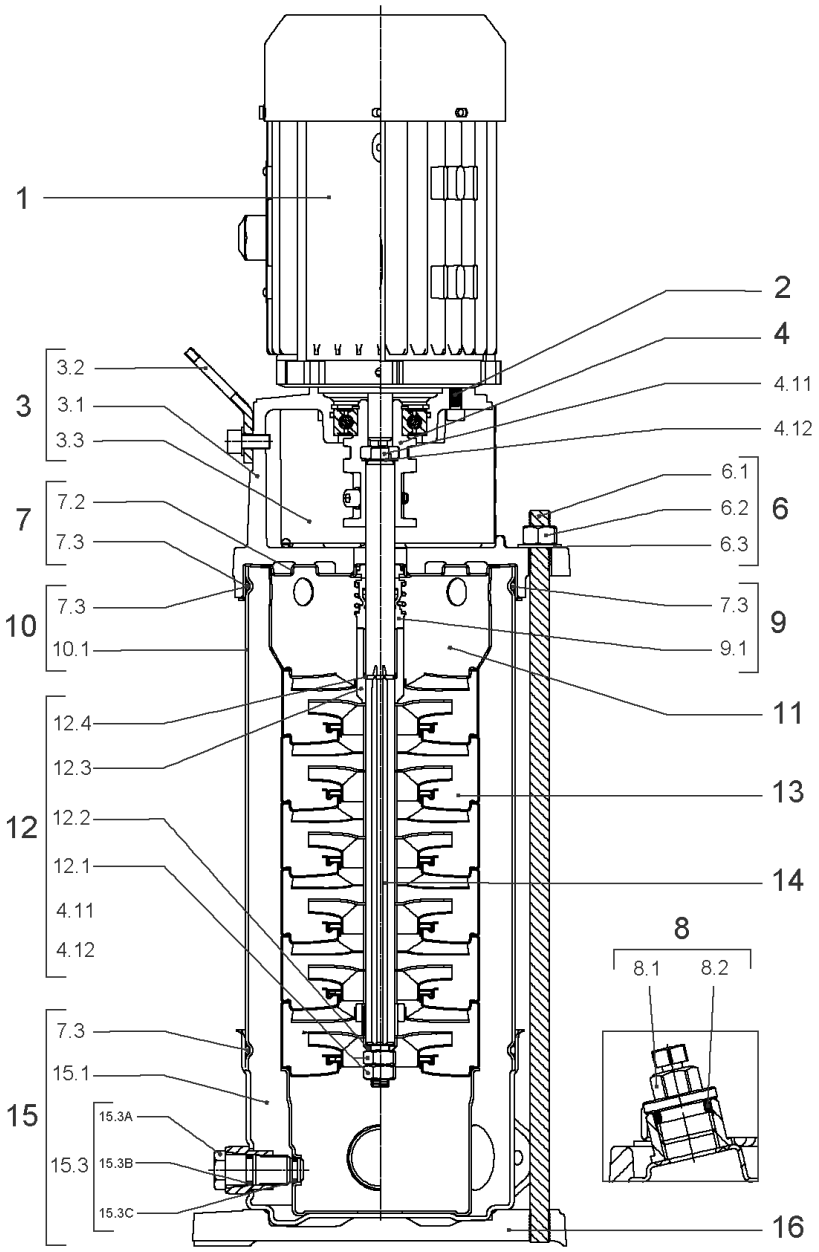
1
2
4
4.11
4.12
3
3.2
3.1
3.3
7
7.2
7.3
10
7.3
10.1
6
6.1
6.2
6.3
9
7.3
9.1
11
12
12.4
12.3
12.2
12.1
4.11
4.12
13
14
8
8.1
8.2
15
7.3
15.1
15.3
15.3A
15.3B
15.3C
16

## HELIX VE608-1/16/E/S (4201585)

| Item | Article no. | Description | Quantity |
|---|---|---|---|
| 1 | | DRIVE HELIX-VE608-IE4-WE KIT | 1 |
| Note: MOTOR BRAND WILO ELEC | | | |
| | | SPARE PARTS MOTOR:ON REQUEST | 1 |
| 2 | 4159707 | SCREW M8X30 (4 PIECES) | 1 |
| 3 | 4214473 | LANTERN FT130 HELIX KIT | 1 |
| 3.1 | | > LANT-MOT-VMI-ReDTC6"-FT130-MACHINED+CATA | 1 |
| 3.2 | 4184852 | > EYELET CPL.FT HELIX (2 PIECES) | 1 |
| 3.3 | 4213782 | > COUPLING PROTECTOR FT115/130 HELIX KIT | 1 |
| 4 | 4159710 | COUPLING D.16XD.28 FT130 HELIX KIT | 1 |
| 6 | 4177821 | STUD BOLT M12X485 KIT | 1 |
| 6.1 | | > TIE BOLT M12-485x18x30-1.4057 | 1 |
| 6.2 | 2094647 | > NUT M12 M12 ISO4032 VP. | 1 |
| 6.3 | 2123557 | > WASHER CS-12.4-24-1.6-NFE25 (4 PIECES) | 1 |
| 7 | 4214481 | STATIONARY RING HOLDER HELIX D27 ReDTC | 1 |
| 7.2 | 4214479 | > STATIONARY RING HOLDER HELIX D27 VP. | 1 |
| 7.3 | 4176513 | > O-RING FOR PUMP JACKET VP. | 1 |
| 8 | 4212724 | FILING/PURGING PLUG HELIX ReDTC KIT | 1 |
| 8.1 | | > FILLING PLUG MVI6"-304 | 1 |
| 8.2 | 4177800 | > O-RING EPDM PLUG HELIX VP. | 1 |
| 9 | 4214483 | MECH.SEAL HELIX6-10-16 O/E ReDTC KIT | 1 |
| 9.1 | 4177801 | > MECH.SEAL HELIX6-10-16 O/E VP. | 1 |
| 7.3 | 4176513 | > O-RING FOR PUMP JACKET VP. | 1 |
| 10 | 2127578 | HOUSING PIPE D.152x360 1.4307 KIT | 1 |
| 7.3 | 4176513 | > O-RING FOR PUMP JACKET VP. | 1 |
| 10.1 | | > HOUSING-PIPE Ø152-M+1008/1606-304 | 1 |
| 11 | 4174087 | CENTERING STAGE-RETURN HELIX6 1.4301VP. | 1 |
| 12 | 4214486 | SHAFT EQUIPMENT HELIX V6 ReDTC KIT | 1 |
| 12.1 | | > NUT-H-M10-A4.70 | 1 |
| 12.2 | | > SERRATED LOCK WASHER M+6M3-316L | 1 |
| 12.3 | | > 1/2-SNAP-RING-6/10M3-316L | 1 |
| 12.4 | | > STOP-RUSH-1/2-D16xd2-M+316 | 1 |
| 4.11 | | > SCREW CHC-M6X14-8.8-ISO4762-GEOMET500A | 1 |
| 4.12 | | > WASHER D.24 L6U ZINK | 1 |
| 13 | | HYDRAULIC HELIX V 608 1.4307 | 1 |

| Item | Article no. | Description | Quantity |
|---|---|---|---|
| 14 | 4214504 | SHAFT D.16X428 HELIX 1.4057 VP. | 1 |
| 15 | 4217897 | PUMP HOUSING HELIX DN32 PN16 1.4301 KIT | 1 |
| 7.3 | 4176513 | > O-RING FOR PUMP JACKET VP. | 1 |
| 15.1 | | > BLASTING PPE HOUSING V-PN16-DN32-5"-304 | 1 |
| 15.2 | 4217891 | > COUNTER FLANGE-G1"1/4-PN16-GJL KIT | 1 |
| 15.3 | 4171321 | > PRIMING/DRAIN PLUG EPDM HELIX KIT | 1 |
| 16 | 4177964 | BASEPLATE HELIX V2/4/6 PN16 VP. | 1 |

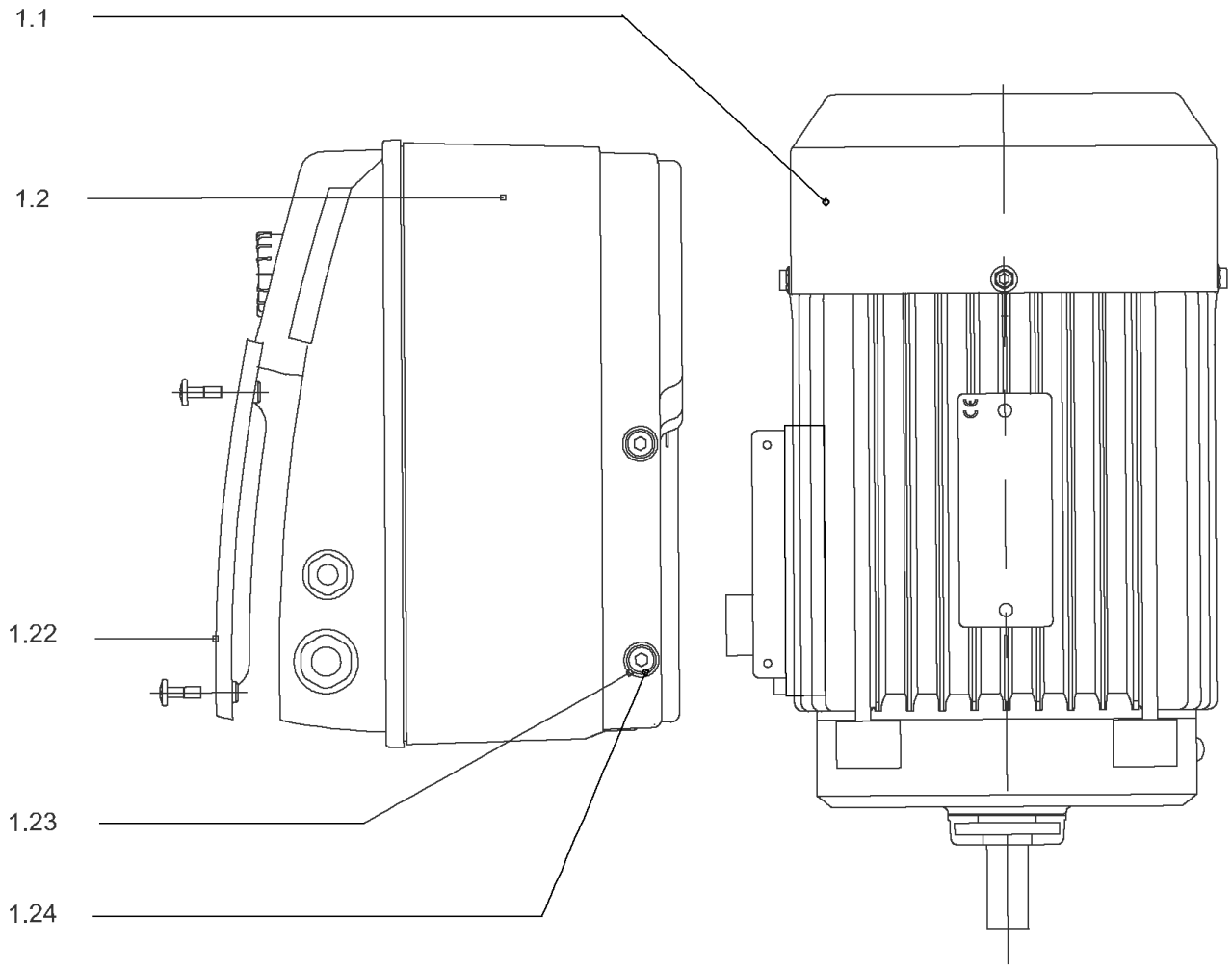
1.1
1.2
1.22
1.23
1.24

## DRIVE HELIX-VE608-IE4-WE KIT

| Item | Article no. | Description | Quantity |
|---|---|---|---|
| 1.1 | 4207922 | MOTOR 3/2/100 3~ 380V 60HZ IE4 WE VP. | 1 |
| | | SPARE PARTS MOTOR:ON REQUEST | 1 |
| 1.2 | 4209338 | MODULE HELIX-VE608-IE4-WE KIT | 1 |
| 1.22 | 2054227 | > MODULE COVER/GASKET TL3/4 KIT | 1 |
| 1.23 | 4215716 | > SCREW M5X16 DIN912 8.8 A2A (4pieces) VP. | 1 |
| 1.24 | 2057978 | > RONDELLE A5,3 DIN6797 FST ZN (4 PIECES) | 1 |

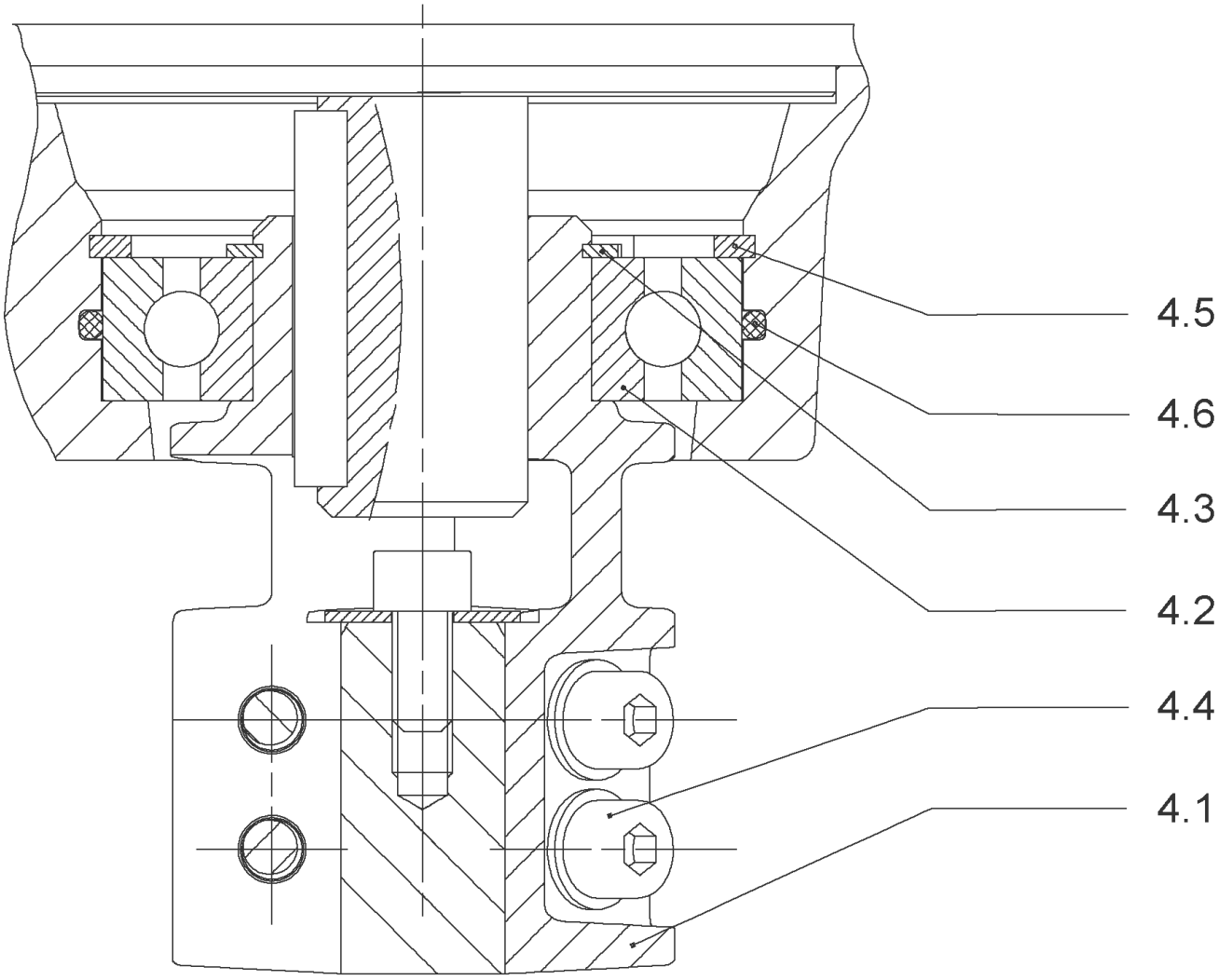
4.5
4.6
4.3
4.2
4.4
4.1

## COUPLING D.16XD.28 FT130 HELIX KIT (4159710)

| Item | Article no. | Description | Quantity |
|---|---|---|---|
| 4.1 | | COUPLING M+ Ø16XØ28 FT130 MACHINED | 1 |
| 4.2 | 2131022 | BALL BEARING 6209/ZZ-C3(HT)VP. | 1 |
| 4.3 | 4233930 | CIRCLIP-FOR-BORES-D45x1,75 VP. | 1 |
| 4.4 | 4157726 | SCREW KIT M8X30 (4 PIECES) | 1 |
| 4.5 | 4234252 | CIRCLIPS 85X3 VP. | 1 |
| 4.6 | 4234243 | O-RING 85X3 VP. | 1 |
| | | NOMEL CONTACT WASHER 8x16x1,4 STEEL ZC | 1 |

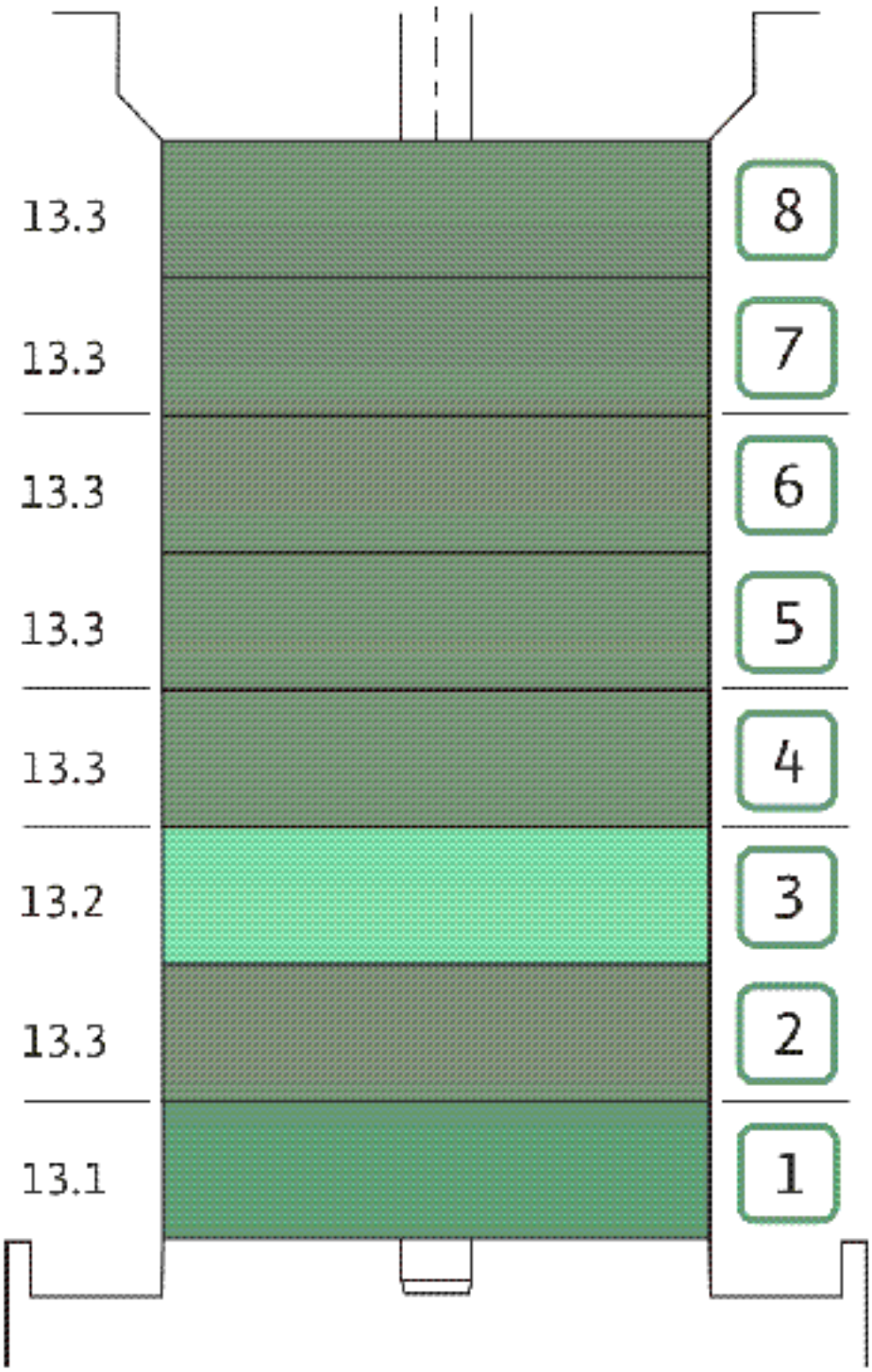
13.3
13.3
13.3
13.3
13.3
13.2
13.3
13.1
8
7
6
5
4
3
2
1

| Item | Article no. | Description | Quantity |
|---|---|---|---|
| 13.1 | 4174084 | STAGE HELIX 6 1.4301 KIT | 1 |
| | | > MACH.STG-CASING-WOGV-WNR-M+6-304 | 1 |
| | | > IMPELLER-M+6-304 | 1 |
| 13.2 | 4174089 | INTERMEDIATE STAGE HELIX 6 1.4301 KIT | 1 |
| | | > MACH.BEARING-STG-CASING-WNR-M+6-304 | 1 |
| | | > IMPELLER-M+6-304 | 1 |
| | | > SHAFT SLEEVE-SPACER-Ø19,35x18,465-304 | 1 |
| | | > SHAFT-SLEEVE-D16xD20x18-CW | 1 |
| 13.3 | 4174090 | INTERMEDIATE STAGE HELIX 6 1.4301 KIT | 1 |
| | | > MACH.STD-STG-CASING-WGV+NR-M+6-304 | 1 |
| | | > IMPELLER-M+6-304 | 1 |
| | | > IMPELLER SPACER Ø16,05X19,45-L36,465-304 | 1 |

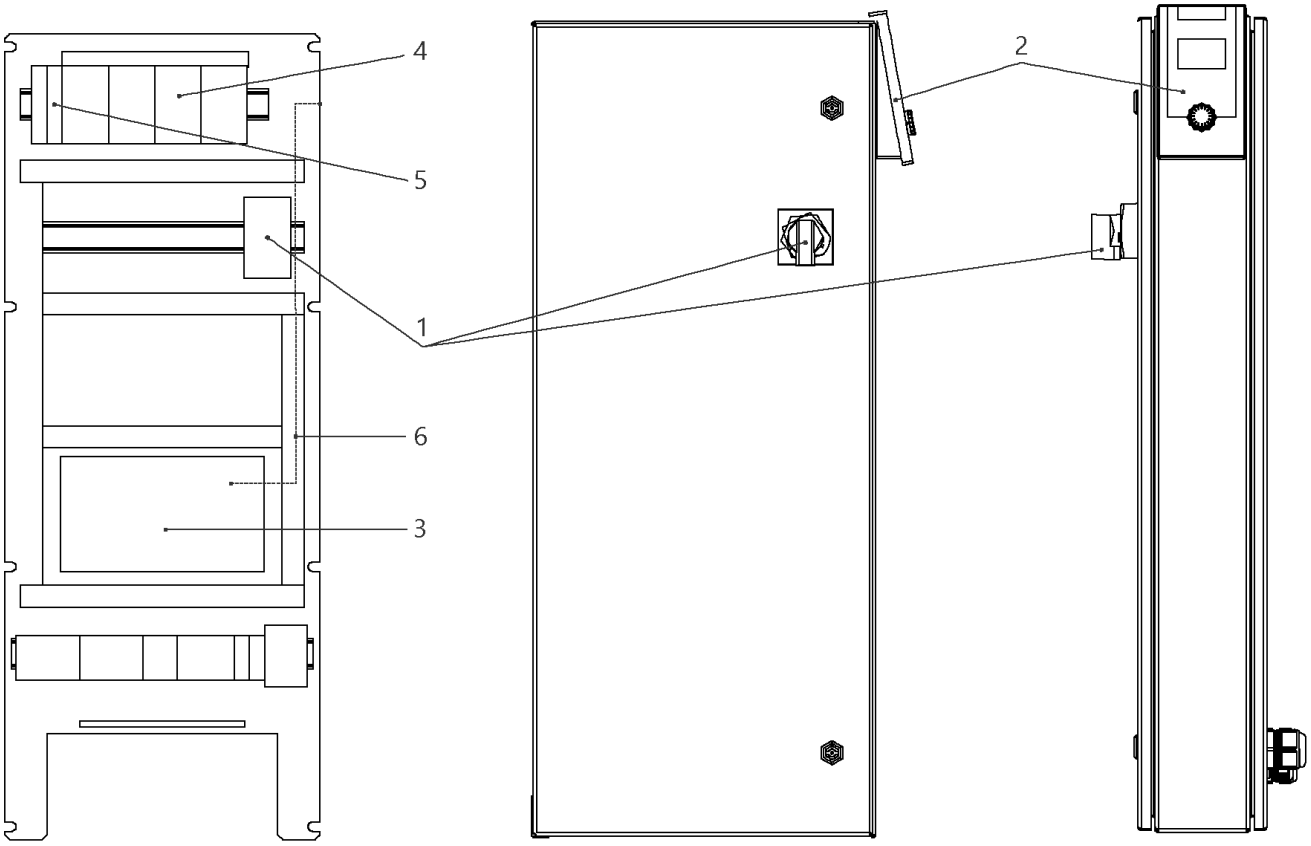
4
5
1
6
3
2

## W-CTRL-SCE-B-4x4,0KW-T4-FM-ND2

| Item | Article no. | Description | Quantity |
|---|---|---|---|
| 1 | 2104473 | MAIN SWITCH OT63F3 L105 KIT | 1 |
| 2 | 4184784 | CONTROL PANEL HMI SC KIT | 1 |
| 2 | 4185259 | ASSEMBLY DISPLAY SC PKG VP. | 1 |
| 3 | 4185257 | ASSEMBLY CPU SCe Booster VP. | 1 |
| 4 | 2051217 | AUTOM.CIRCUIT BREAKER S203 B16 TO7,5kW | 1 |
| 5 | 2046288 | CIRCUIT BREAKER S201 B16 | 1 |
| 6 | 4194956 | PATCH CABLE RJ45 CAT6 1,0M BLUE SC-PANEL | 1 |

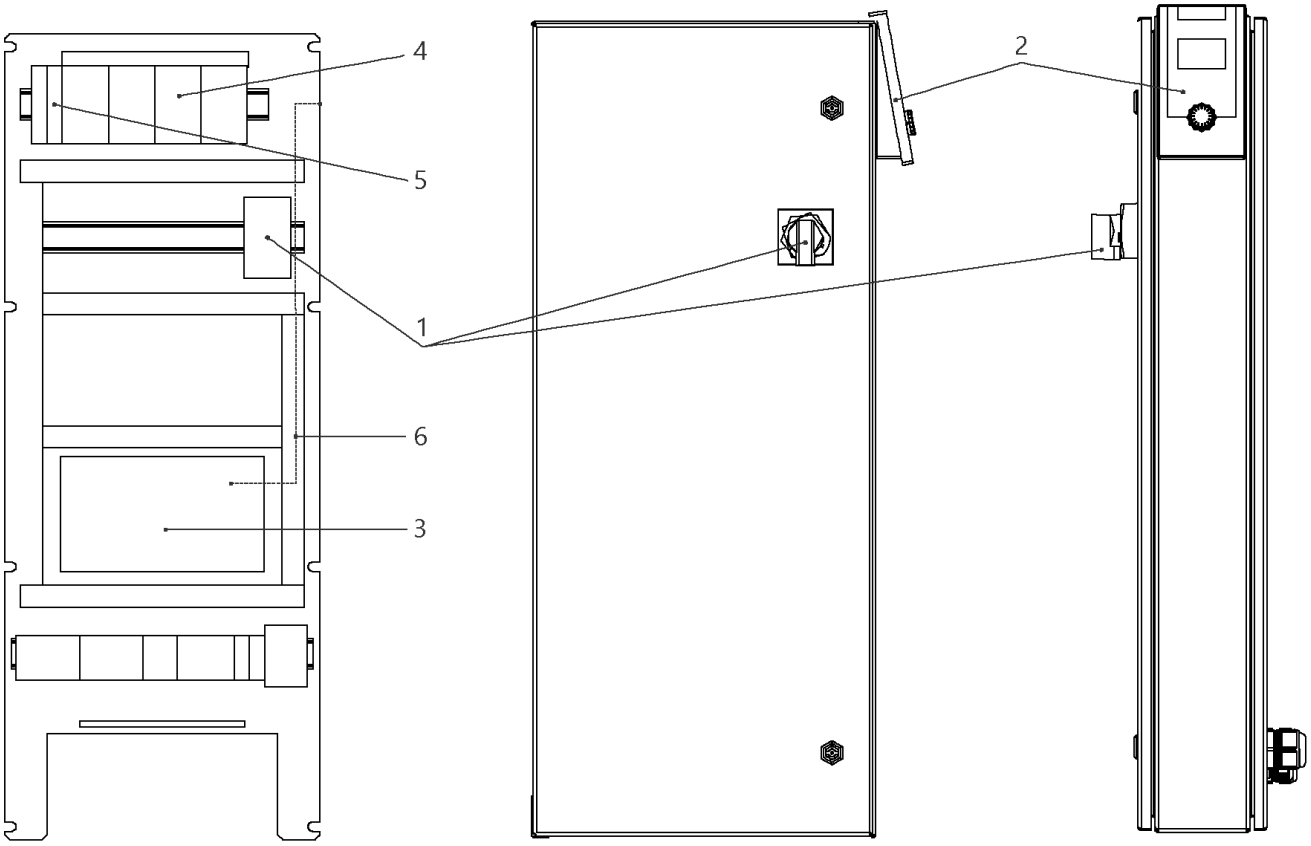
4
5
1
6
3
2

## W-CTRL-SCE-B-4x13A-T34-FM-ND2-AVC-PKG (2541907)

| Item | Article no. | Description | Quantity |
|---|---|---|---|
| 1 | 2104477 | MAIN SWITCH OT80F3 L105 KIT | 1 |
| Note: TO / BIS / JUSQU'AU 30/06/2015 | | | |
| 1 | 2104473 | MAIN SWITCH OT63F3 L105 KIT | 1 |
| Note: FROM / AB / À PARTIR DU 01/07/2015 | | | |
| 2 | 4184784 | CONTROL PANEL HMI SC KIT | 1 |
| 2 | 4185259 | ASSEMBLY DISPLAY SC PKG VP. | 1 |
| Note: DISPLAY ALONE / PLATINE SEULE | | | |
| 3 | 4185257 | ASSEMBLY CPU SCe Booster VP. | 1 |
| 5 | 2046288 | CIRCUIT BREAKER S201 B16 | 1 |
| 4 | 2051217 | AUTOM.CIRCUIT BREAKER S203 B16 TO7,5kW | 1 |
| 6 | 4194956 | PATCH CABLE RJ45 CAT6 1,0M BLUE SC-PANEL | 1 |

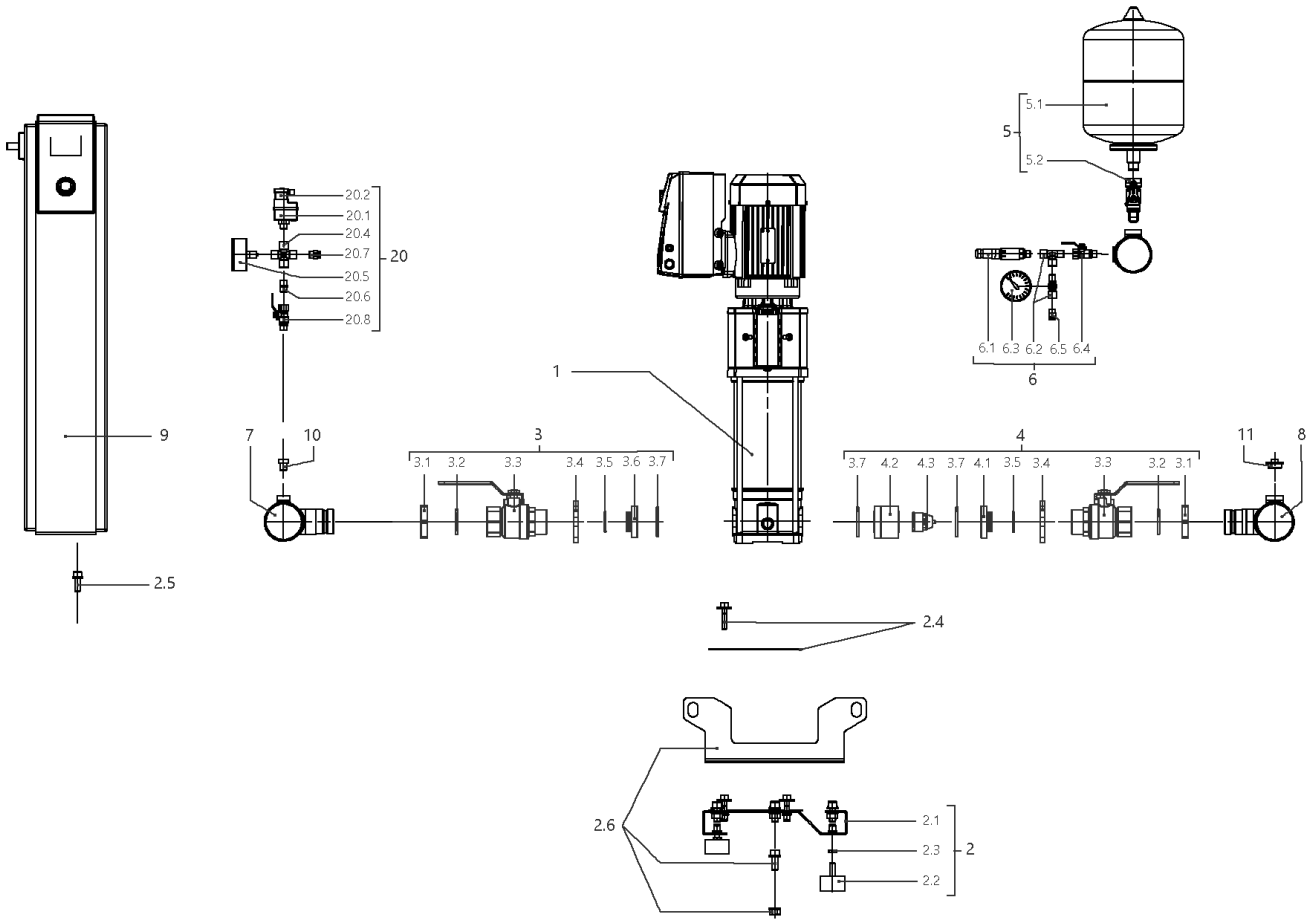
5.1
5
5.2
20.2
20.1
20.4
20.7
20
20.5
20.6
20.8
6.1 6.3 6.2 6.5 6.4
6
1
9
7
10
3
3.1 3.2 3.3 3.4 3.5 3.6 3.7
4
3.7 4.2 4.3 3.7 4.1 3.5 3.4 3.3 3.2 3.1
11
8
2.5
2.4
2.6
2.1
2.3
2
2.2

## SiBoost Smart 4HELIX VE611 (2536380)

| Item | Article no. | Description | Quantity |
|---|---|---|---|
| 1 | | HELIX VE611-1/16/E/S | 1 |
| Note: TO / BIS / JUSQU'AU 30/04/2016 | | | |
| 1 | 4201587 | HELIX VE611-1/16/E/S | 1 |
| Note: FROM / AB / À PARTIR DU 01/05/2016 | | | |
| 2 | 4200146 | BASE PLATE DE4 1450x420 KIT | 1 |
| 2.1 | | > BASEPLATE_4x4/6/10/16V_E300_BOX_150 | 1 |
| 2.2 | 2028654 | > VIBRATION DAMPER D.50X30 M10X28 | 1 |
| 2.3 | 2028281 | > NUT M10 DIN936 (ISO4035) 17H VZ | 1 |
| 2.4 | 4199875 | > HOLDER PUMP Siboost Helix V2/4 KIT | 1 |
| 2.5 | 4197084 | > HOLDER SWITCHBOX WILO Smart Control KIT | 1 |
| 2.6 | 4197117 | > LIFTING Siboost HELIX SC KIT | 1 |
| 3 | 4199876 | SUCTION SIDE Siboost Helix V2/4/6 KIT | 1 |
| 3.1 | 2032610 | > NUT G11/4 MS VP. | 1 |
| 3.2 | 2032611 | > O-RING ID.36,09X3,53N DIN3771 E7502 | 1 |
| 3.3 | 2507646 | > BALL VALVE G11/4"M-F-W.HANDLE 1/4-TURN | 1 |
| 3.4 | 2032613 | > SCREWED FLANGE G1 1/4" LK-75 ST37VZ | 1 |
| 3.5 | 2032614 | > O-RING ID.29,82X2,62N DIN3771 E7502 | 1 |
| 3.6 | 2032615 | > SPACER F.I/A KUH.DN32 CUZN | 1 |
| 3.7 | 2032616 | > O-RING ID.44X3,53N DIN3771 E7502 | 1 |
| 4 | 4199877 | DELIVERY SIDE Siboost Helix V2/4/6 KIT | 1 |
| 3.1 | 2032610 | > NUT G11/4 MS VP. | 1 |
| 3.2 | 2032611 | > O-RING ID.36,09X3,53N DIN3771 E7502 | 1 |
| 3.3 | 2507646 | > BALL VALVE G11/4"M-F-W.HANDLE 1/4-TURN | 1 |
| 3.4 | 2032613 | > SCREWED FLANGE G1 1/4" LK-75 ST37VZ | 1 |
| 3.5 | 2032614 | > O-RING ID.29,82X2,62N DIN3771 E7502 | 1 |
| 4.1 | 2058116 | > SPACER F.I/A KUH.DN32 CUZN | 1 |
| 3.7 | 2032616 | > O-RING ID.44X3,53N DIN3771 E7502 | 1 |
| 4.2 | 2058115 | > HOUSING RFV(RV-IN) DN32 SGS/DRS | 1 |
| 4.3 | 2027870 | > NON-RETURN-DEVICE INSERT DN32(MTR) | 1 |
| 5 | 2032642 | DIAPHREM TANK 8L/PN16 DIN4807/T5 KIT | 1 |
| 5.1 | 2045914 | > DIAPHREM TANK 8L TYP-DD 16BAR | 1 |
| 5.2 | 2027853 | > FLOW FITTING G3/4 FOR DIAPHRAGM VES. | 1 |
| 6 | 4197076 | PRESSURE SENSOR/ GAUGE 0-16BAR KIT | 1 |
| 6.1 | 2085909 | > PRESS.SENSOR 1/4" 0-16BAR 4-20MA VP. | 1 |

| Item | Article no. | Description | Quantity |
|---|---|---|---|
| 6.2 | 4197077 | > T-PIECE 1/4" VP. | 1 |
| 6.3 | 2028692 | > PRESSURE GAUGE NG63-PN16-G1/4 | 1 |
| 6.4 | 2028291 | > BALL TAP R1/4" PN42 GIACOMINI R254DL | 1 |
| 6.5 | 2028691 | > BLOWGUN 1/4" MS 30BAR VP. | 1 |
| 7 | 4200144 | PIPE DE4 21/2''-4x11/4"+2x1/4x900 VP. | 1 |
| 8 | 4200145 | PIPE DE4 21/2''-4x11/4"+2x1/4+1x3/4x900 | 1 |
| 9 | | W-CTRL-SCE-B-4x4,0KW-T4-FM-ND2 | 1 |
| Note: TO / BIS / JUSQU'AU 18/05/2014 | | | |
| 9 | 2541907 | W-CTRL-SCE-B-4x13A-T34-FM-ND2-AVC-PKG | 1 |
| Note: FROM / AB / À PARTIR DU 19/05/2014 - TO / BIS / JUSQU'AU 16/10/2017 | | | |
| 9 | 2541903 | W-CTRL-SCE-B-4x10A-T34-FM-ND2-AVC-PKG | 1 |
| Note: FROM / AB / À PARTIR DU 17/10/2017 | | | |
| 10 | 4197079 | PLUG G1/4"x10 AISI304 KIT | 1 |
| 11 | 2032654 | PLUG R3/4" MS VIEGA 1751 | 1 |
| 20 | | ASSEMBLY WMS. DE-EB. +VP | 1 |
| 20.1 | 2028652 | > PRESSURE SWITCH PS3-ASR 1/(1,3) VP. | 1 |
| 20.2 | 2130983 | > PLUG PS3-415 WITH KABEL 1,5M 2NO VP. | 1 |
| 20.4 | 2028290 | > CROSSPIECE R1/4" MS-NICKEL | 1 |
| 20.5 | 2028687 | > PRESSURE GAUGE NG63 R1/4" HI.0-6BAR | 1 |
| 20.6 | 2054268 | > DUAL NIPPLE G1/4" x G1/4" MS VP. | 1 |
| 20.7 | 2028691 | > BLOWGUN 1/4" MS 30BAR VP. | 1 |
| 20.8 | 2028291 | > BALL TAP R1/4" PN42 GIACOMINI R254DL | 1 |

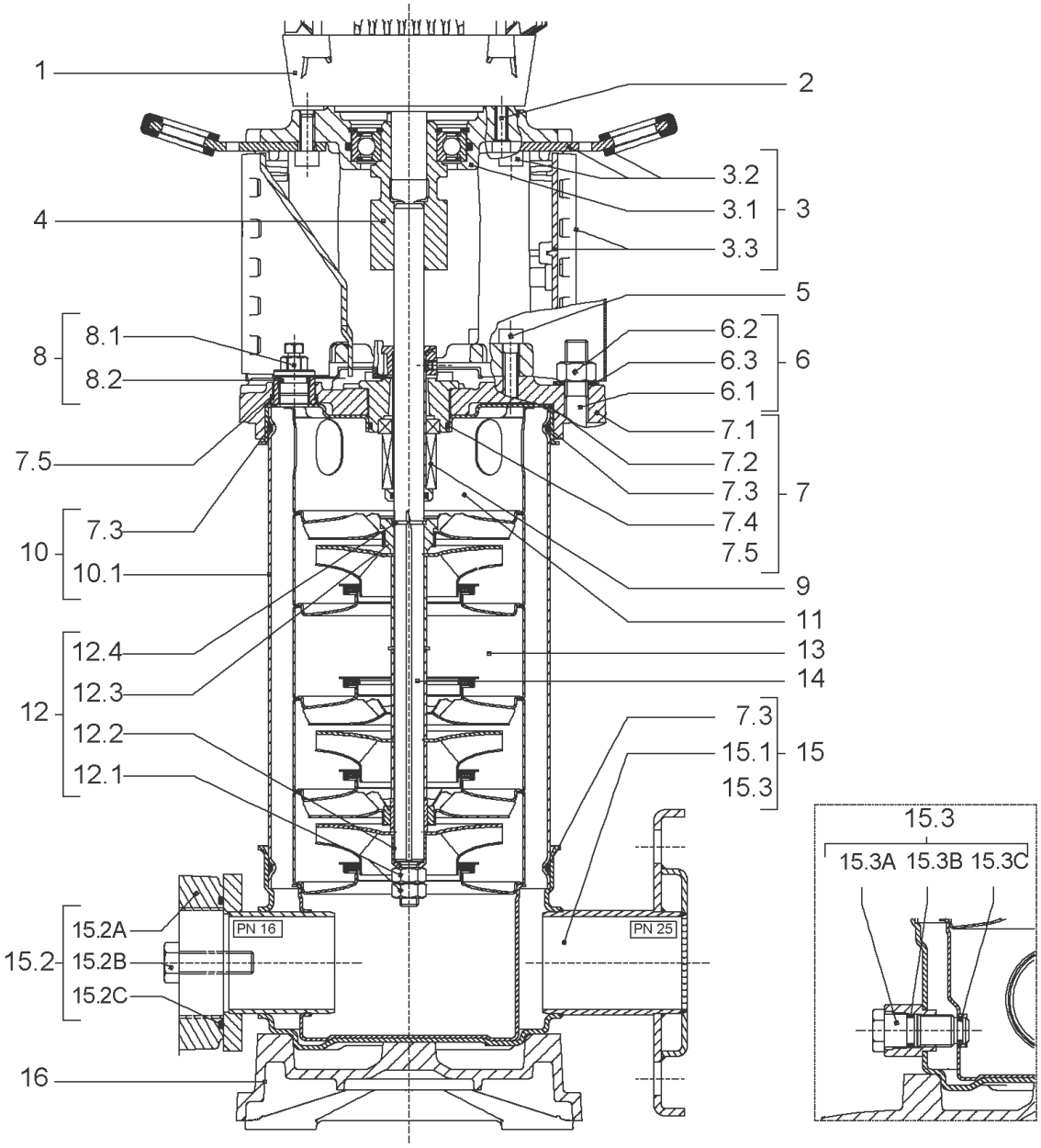
1
2
3.2
3.1
3
3.3
4
5
8.1
8
8.2
6.2
6.3
6
6.1
7.1
7.5
7.2
7.3
7
7.4
7.3
10
7.5
10.1
9
11
12.4
13
12.3
14
12
12.2
7.3
15.1
15
12.1
15.3
15.3
15.3A 15.3B 15.3C
15.2A
PN 16
PN 25
15.2
15.2B
15.2C
16

| Item | Article no. | Description | Quantity |
|---|---|---|---|
| 1 | | DRIVE HELIX-VE611-IE2-ATB KIT | 1 |
| Note: MOTOR BRAND ATB | | | |
| 1 | | DRIVE HELIX-VE611IE2-WE KIT | 1 |
| Note: MOTOR BRAND WILO ELEC | | | |
| 1 | | DRIVE HELIX-VE611-IE4-WE KIT | 1 |
| Note: MOTOR BRAND WILO ELEC | | | |
| 2 | 4206025 | SCREW M8X45 (4 PIECES) | 1 |
| 3 | 4172789 | LANTERN FT130 HELIX V10 KIT | 1 |
| 3.1 | | > M+5_6_LANTERN_ONE-PIECE_FT130_CATA | 1 |
| 3.2 | 2127604 | > EYELET CPL.FT HELIX(2 PIECES) | 1 |
| 3.3 | 4159692 | > COUPLING PROTECTOR FT HELIX KIT | 1 |
| 4 | 4159710 | COUPLING D.16XD.28 FT130 HELIX KIT | 1 |
| 5 | 4159707 | SCREW M8X30 (4 PIECES) | 1 |
| 6 | 4177842 | STUD BOLT M12X638KIT | 1 |
| 6.1 | | > TIE BOLT M12-638x18x30-1.4057 | 1 |
| 6.2 | 2094647 | > NUT M12 M12 ISO4032 VP. | 1 |
| 6.3 | 2123557 | > WASHER CS-12.4-24-1.6-NFE25 (4 PIECES) | 1 |
| 7 | 4210143 | STATIONARY RING HOLDER HELIX 6" EPDM | 1 |
| 7.2 | 2127607 | > STATIONARY RING HOLDER 6" HELIX 1.4301 V | 1 |
| 7.3 | 4176513 | > O-RING FOR PUMP JACKET VP. | 1 |
| 7.4 | 2127603 | > O-RING ID.37,6x2,4 EPDM VP. | 1 |
| 7.5 | 2127602 | > O-RING ID.21,35x2 EPDM VP. | 1 |
| 8 | 4159686 | FILING/PURGING PLUG HELIX EPDM KIT | 1 |
| 9 | 4171327 | SEAL-KIT-HELIX6-10-16 O/E KIT | 1 |
| 10 | 4177843 | HOUSING PIPES D.152X510 1.4307 KIT | 1 |
| 7.3 | 4176513 | > O-RING FOR PUMP JACKET VP. | 1 |
| 10.1 | | > HOUSING-PIPE Ø152-M+1012/1609-304 | 1 |
| 11 | 4174087 | CENTERING STAGE-RETURN HELIX6 1.4301VP. | 1 |
| 12 | 4174086 | SHAFTS EQUIPMENT HELIX V6 MONOBLOC KIT | 1 |
| 12.1 | | > NUT-H-M10-A4.70 | 1 |
| 12.2 | | > SERRATED LOCK WASHER M+6M3-316L | 1 |
| 12.3 | | > IMPELLER STOP RING L33,2-304 | 1 |
| 12.4 | | > STOP-RUSH-1/2-D16xd2-M+316 | 1 |
| 13 | | HYDRAULIC HELIX V 611 1.4307 | 1 |

| Item | Article no. | Description | Quantity |
|---|---|---|---|
| 14 | 4177844 | SHAFT D.16X630 1.4301 VP. | 1 |
| 15 | 4217897 | PUMP HOUSING HELIX DN32 PN16 1.4301 KIT | 1 |
| 7.3 | 4176513 | > O-RING FOR PUMP JACKET VP. | 1 |
| 15.1 | | > BLASTING PPE HOUSING V-PN16-DN32-5"-304 | 1 |
| 15.2 | 4217891 | > COUNTER FLANGE-G1"1/4-PN16-GJL KIT | 1 |
| 15.3 | 4171321 | > PRIMING/DRAIN PLUG EPDM HELIX KIT | 1 |
| 16 | 4177964 | BASEPLATE HELIX V2/4/6 PN16 VP. | 1 |

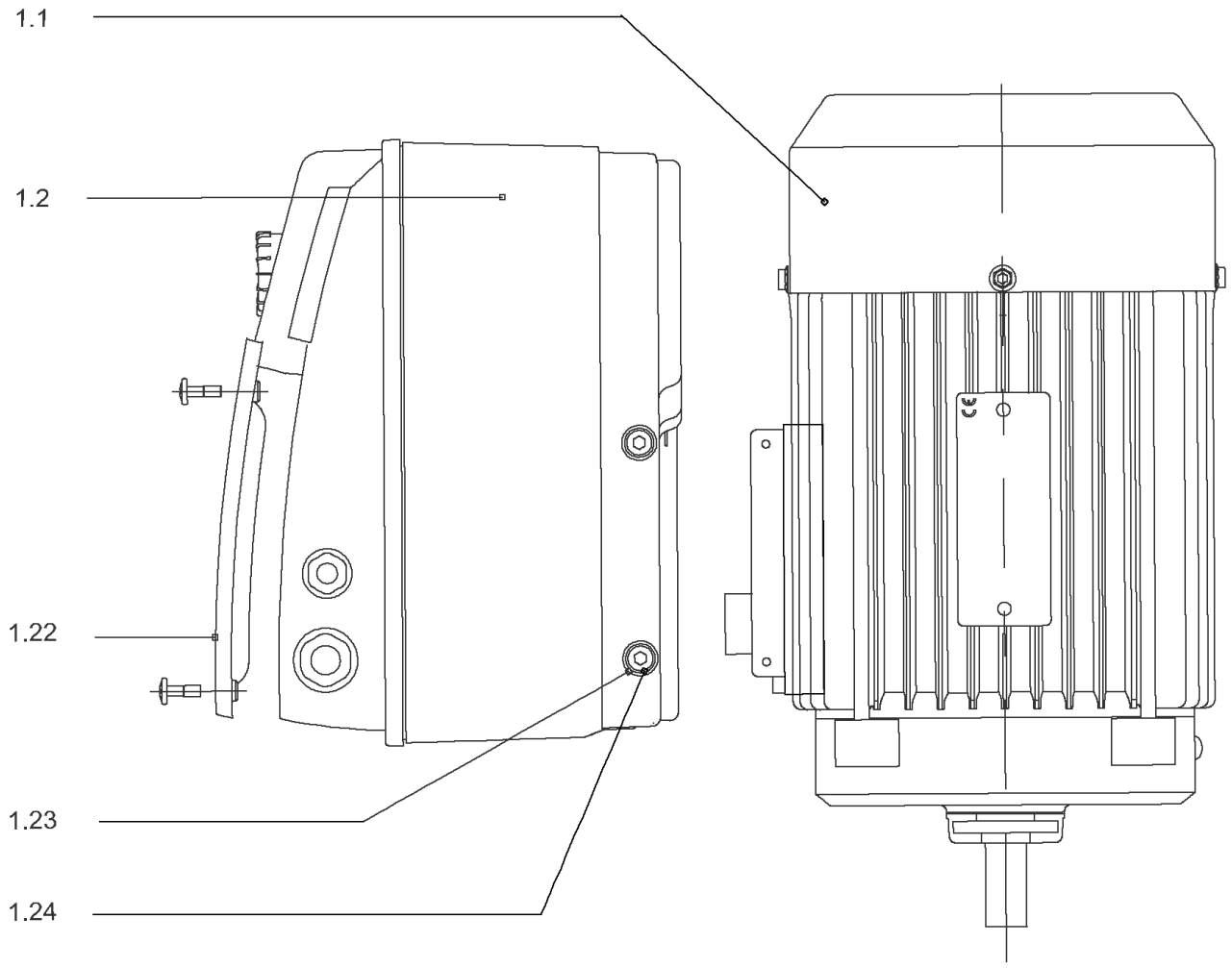
1.1
1.2
1.22
1.23
1.24

## DRIVE HELIX-VE611-IE2-ATB KIT

| Item | Article no. | Description | Quantity |
|---|---|---|---|
| 1.1 | | MOTOR 4/2/112 3~ 380V 60HZ IE2 ATB VP. | 1 |
| Note: no longer available/nicht mehrlieferbarn'est plus disponible | | | |
| | | SPARE PARTS MOTOR:ON REQUEST | 1 |
| 1.2 | 4186772 | MODULE HELIX-VE611-IE2-ATB KIT | 1 |
| 1.22 | 2054227 | > MODULE COVER/GASKET TL3/4 KIT | 1 |
| 1.23 | 4215716 | > SCREW M5X16 DIN912 8.8 A2A (4pieces) VP. | 1 |
| 1.24 | 2057978 | > RONDELLE A5,3 DIN6797 FST ZN (4 PIECES) | 1 |

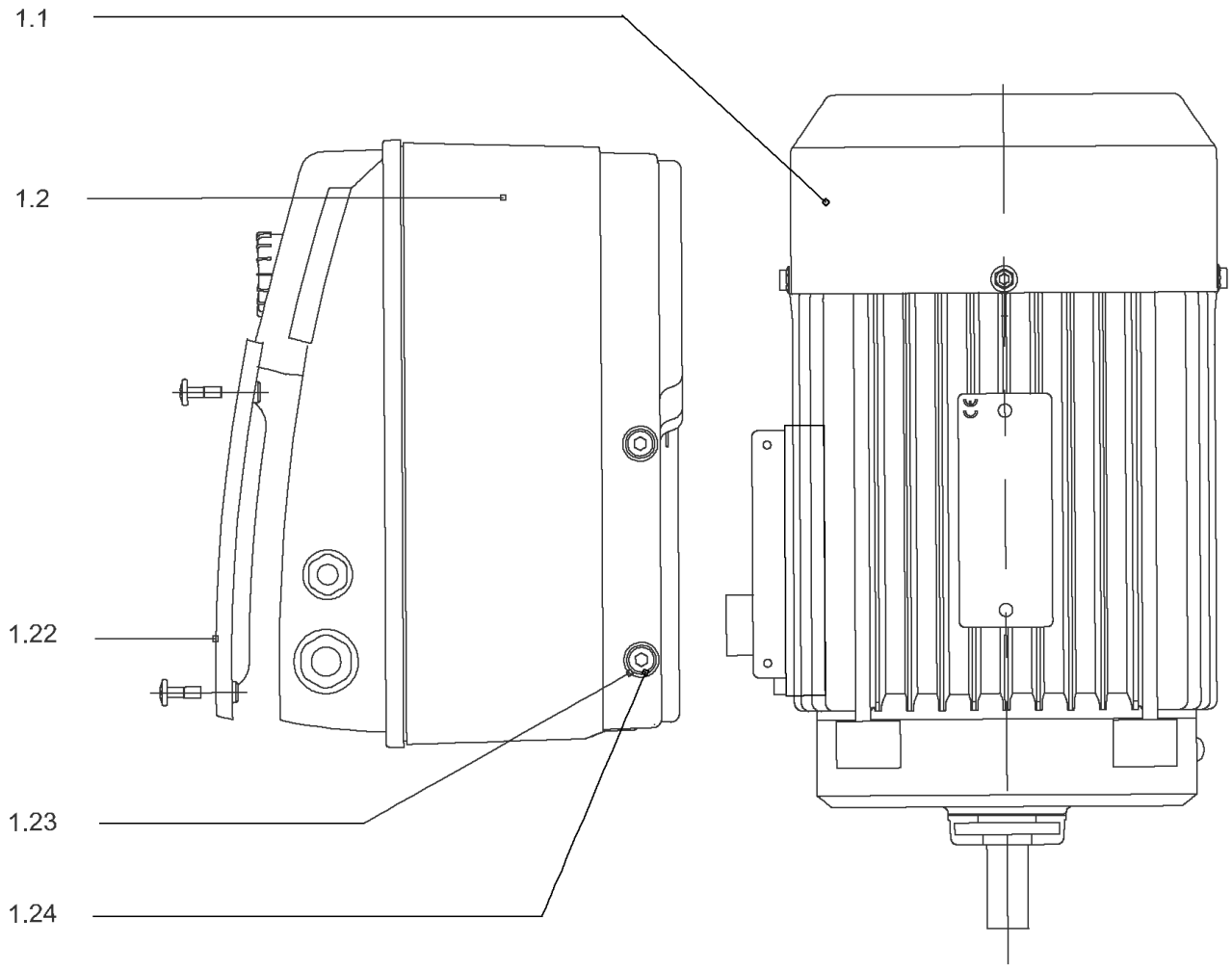
1.1
1.2
1.22
1.23
1.24

## DRIVE HELIX-VE611IE2-WE KIT

| Item | Article no. | Description | Quantity |
|---|---|---|---|
| 1.1 | 4188824 | MO.4/2/112 3~380V 60Hz IE2 WE VP. | 1 |
| | | SPARE PARTS MOTOR:ON REQUEST | 1 |
| 1.2 | 4186332 | MODULE HELIX-VE611-IE2-WE KIT | 1 |
| 1.22 | 2054227 | > MODULE COVER/GASKET TL3/4 KIT | 1 |
| 1.23 | 4215716 | > SCREW M5X16 DIN912 8.8 A2A (4pieces) VP. | 1 |
| 1.24 | 2057978 | > RONDELLE A5,3 DIN6797 FST ZN (4 PIECES) | 1 |

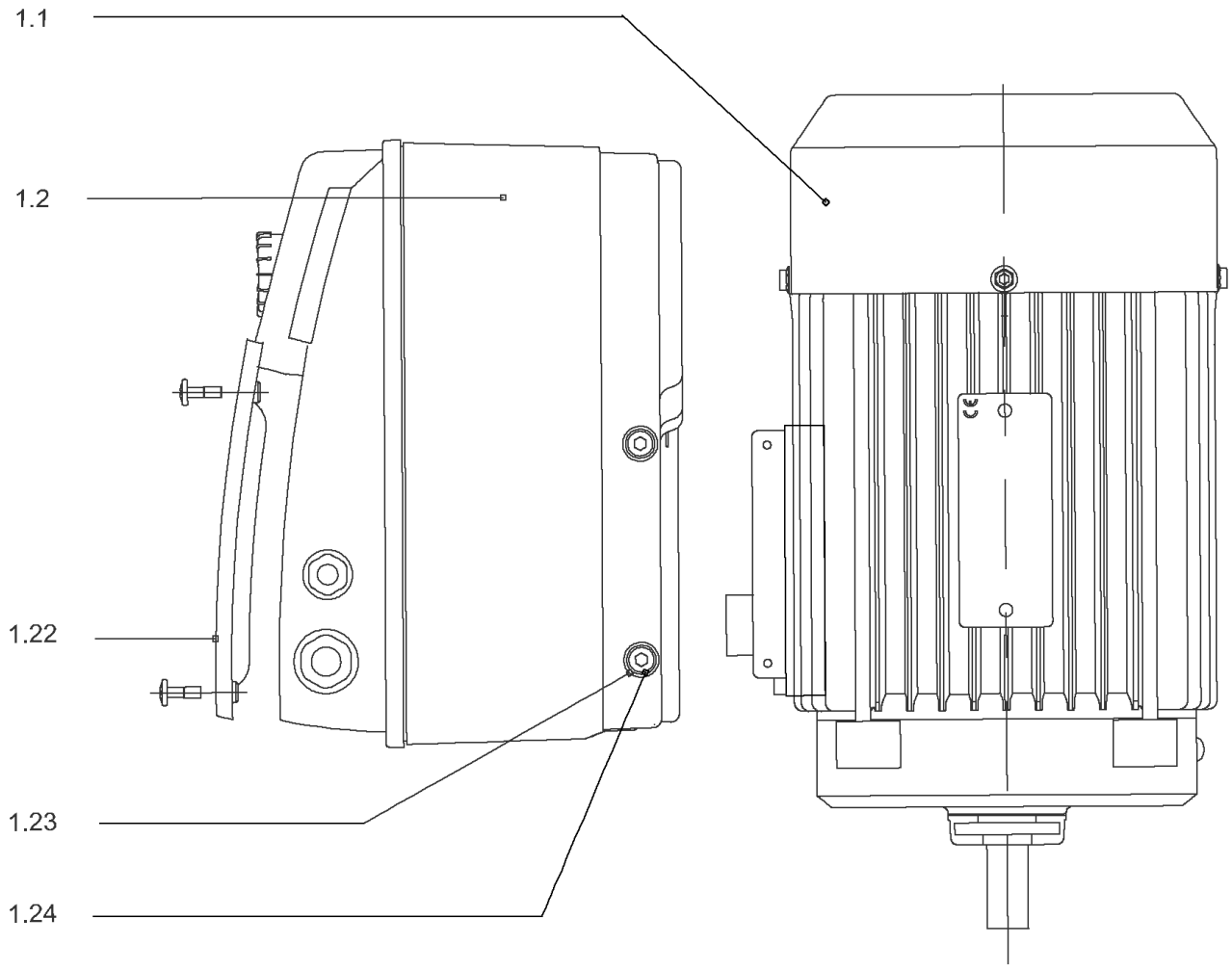
1.1
1.2
1.22
1.23
1.24

## DRIVE HELIX-VE611-IE4-WE KIT

| Item | Article no. | Description | Quantity |
|---|---|---|---|
| 1.1 | 4207924 | MOTOR 4/2/112 3~ 380V 60HZ IE4 WE VP. | 1 |
| | | SPARE PARTS MOTOR:ON REQUEST | 1 |
| 1.2 | 4209605 | MODULE HELIX-VE611-IE4-WE KIT | 1 |
| 1.22 | 2054227 | > MODULE COVER/GASKET TL3/4 KIT | 1 |
| 1.23 | 4215716 | > SCREW M5X16 DIN912 8.8 A2A (4pieces) VP. | 1 |
| 1.24 | 2057978 | > RONDELLE A5,3 DIN6797 FST ZN (4 PIECES) | 1 |

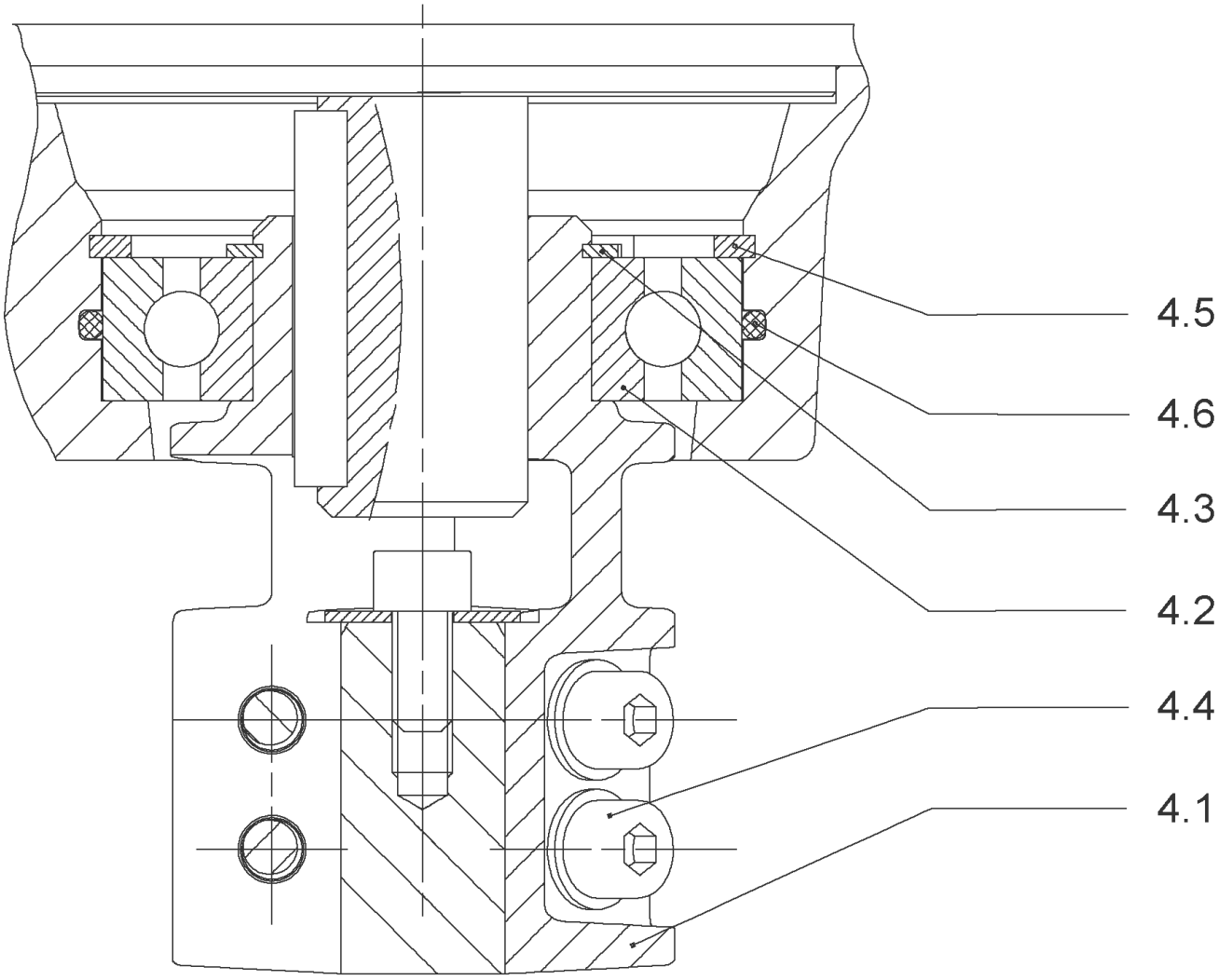
4.5
4.6
4.3
4.2
4.4
4.1

## COUPLING D.16XD.28 FT130 HELIX KIT (4159710)

| Item | Article no. | Description | Quantity |
|---|---|---|---|
| 4.1 | | COUPLING M+ Ø16XØ28 FT130 MACHINED | 1 |
| 4.2 | 2131022 | BALL BEARING 6209/ZZ-C3(HT)VP. | 1 |
| 4.3 | 4233930 | CIRCLIP-FOR-BORES-D45x1,75 VP. | 1 |
| 4.4 | 4157726 | SCREW KIT M8X30 (4 PIECES) | 1 |
| 4.5 | 4234252 | CIRCLIPS 85X3 VP. | 1 |
| 4.6 | 4234243 | O-RING 85X3 VP. | 1 |
| | | NOMEL CONTACT WASHER 8x16x1,4 STEEL ZC | 1 |

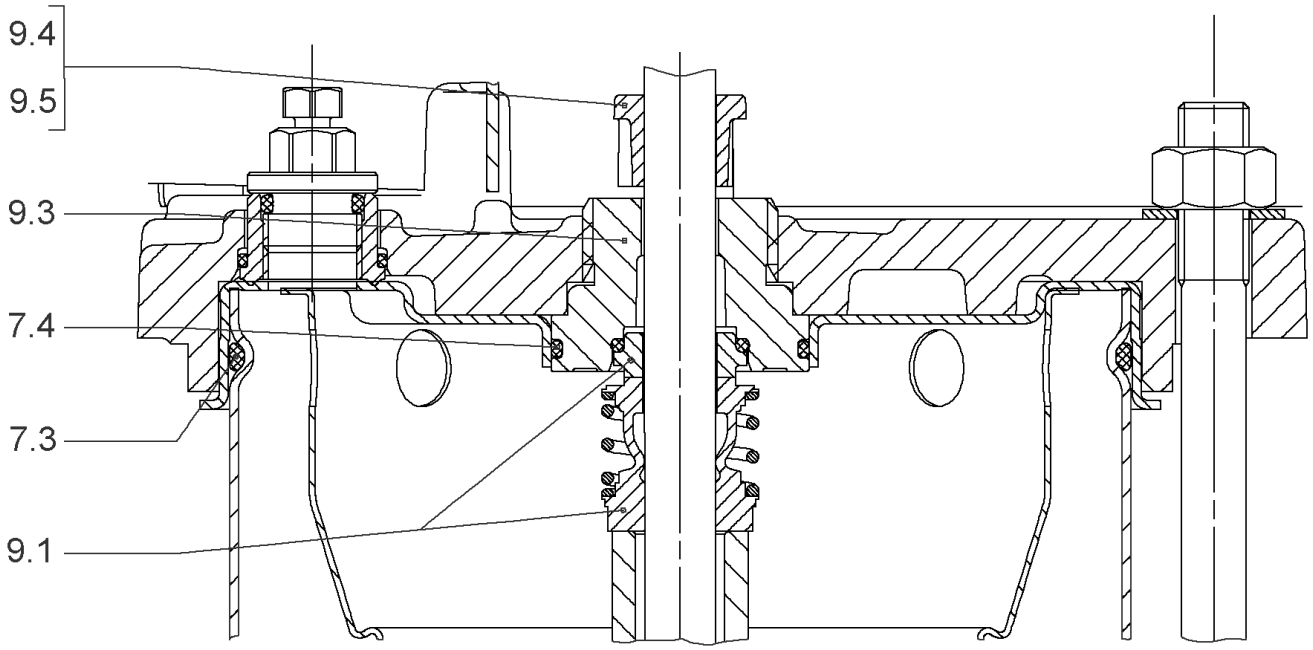
9.4
9.5
9.3
7.4
7.3
9.1

## SEAL-KIT-HELIX6-10-16 O/E KIT (4171327)

| Item | Article no. | Description | Quantity |
|---|---|---|---|
| 7.3 | 4176513 | O-RING FOR PUMP JACKET VP. | 1 |
| 7.4 | 2127603 | O-RING ID.37,6x2,4 EPDM VP. | 1 |
| 9.1 | 4177801 | MECH.SEAL HELIX6-10-16 O/E VP. | 1 |
| 9.3 | 4177798 | MACHINED RING HOLDER M+6" Ø16 304 VP. | 1 |
| 9.5 | 4177799 | MACHINED DRIVE RING Ø16 VP. | 1 |
| 9.4 | 4176520 | SCREW CH M5x5 A4-70 ( 3PIECES ) | 1 |

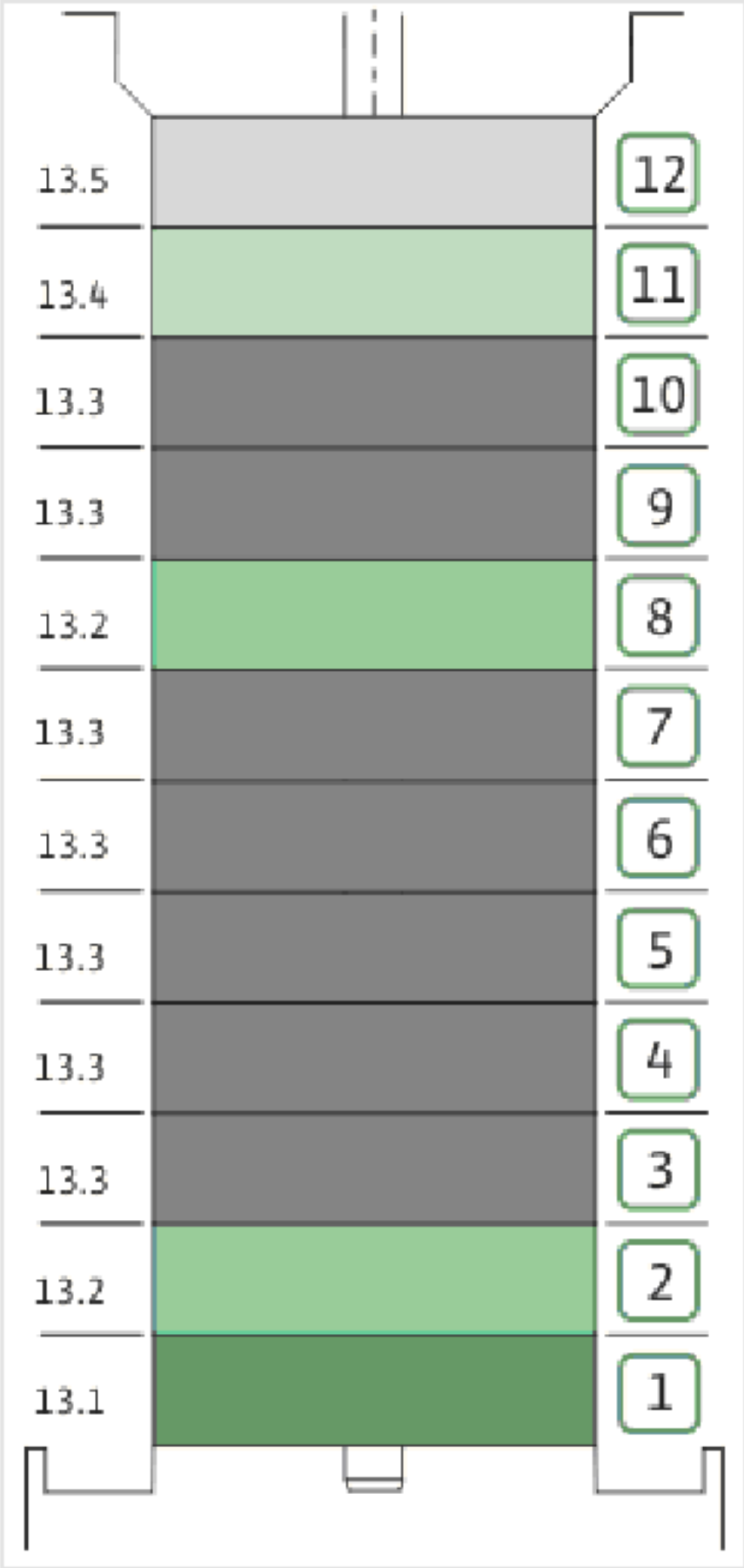
13.5
13.4
13.3
13.3
13.2
13.3
13.3
13.3
13.3
13.3
13.2
13.1
12
11
10
9
8
7
6
5
4
3
2
1

## HYDRAULIC HELIX V 611 1.4307

| Item | Article no. | Description | Quantity |
|---|---|---|---|
| 13.1 | 4174084 | STAGE HELIX 6 1.4301 KIT | 1 |
| | | > MACH.STG-CASING-WOGV-WNR-M+6-304 | 1 |
| | | > IMPELLER-M+6-304 | 1 |
| 13.2 | 4174089 | INTERMEDIATE STAGE HELIX 6 1.4301 KIT | 1 |
| | | > MACH.BEARING-STG-CASING-WNR-M+6-304 | 1 |
| | | > IMPELLER-M+6-304 | 1 |
| | | > SHAFT SLEEVE-SPACER-Ø19,35x18,465-304 | 1 |
| | | > SHAFT-SLEEVE-D16xD20x18-CW | 1 |
| 13.3 | 4174090 | INTERMEDIATE STAGE HELIX 6 1.4301 KIT | 1 |
| | | > MACH.STD-STG-CASING-WGV+NR-M+6-304 | 1 |
| | | > IMPELLER-M+6-304 | 1 |
| | | > IMPELLER SPACER Ø16,05X19,45-L36,465-304 | 1 |
| 13.4 | 4174092 | EMPTY STAGE HELIX6 1.4301KIT | 1 |
| | | > MACH.STD-STG-CASING-WGV+NR-M+6-304 | 1 |
| | | > FLAT WASHER-D16.1XD22X1.2-316L | 1 |
| | | > IMPELLER SPACER Ø16,05X19,45-L36,465-304 | 1 |
| 13.5 | 4174091 | STAGE HELIX 6 1.4301 KIT | 1 |
| | | > MACH.STG-CASING-WOGV-WNR-M+6-304 | 1 |
| | | > IMPELLER-M+6-304 | 1 |
| | | > IMPELLER SPACER Ø16,05X19,45-L36,465-304 | 1 |

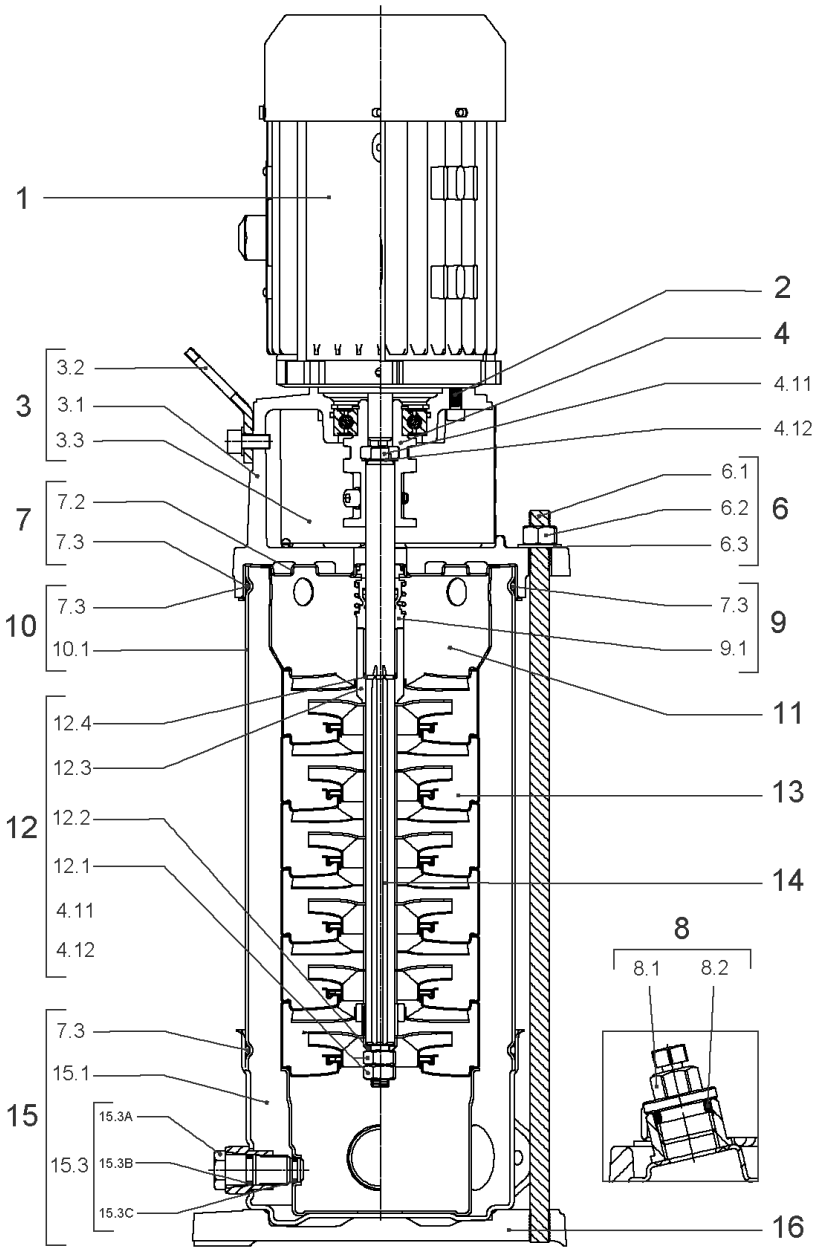
1
2
4
4.11
4.12
3
3.2
3.1
3.3
7
7.2
7.3
6
6.1
6.2
6.3
10
7.3
10.1
9
7.3
9.1
11
12
12.4
12.3
12.2
12.1
4.11
4.12
13
14
8
8.1
8.2
15
7.3
15.1
15.3
15.3A
15.3B
15.3C
16

## HELIX VE611-1/16/E/S (4201587)

| Item | Article no. | Description | Quantity |
|---|---|---|---|
| 1 | | DRIVE HELIX-VE611-IE4-WE KIT | 1 |
| Note: MOTOR BRAND WILO ELEC | | | |
| | | SPARE PARTS MOTOR:ON REQUEST | 1 |
| 2 | 4159707 | SCREW M8X30 (4 PIECES) | 1 |
| 3 | 4214473 | LANTERN FT130 HELIX KIT | 1 |
| 3.1 | | > LANT-MOT-VMI-ReDTC6"-FT130-MACHINED+CATA | 1 |
| 3.2 | 4184852 | > EYELET CPL.FT HELIX (2 PIECES) | 1 |
| 3.3 | 4213782 | > COUPLING PROTECTOR FT115/130 HELIX KIT | 1 |
| 4 | 4159710 | COUPLING D.16XD.28 FT130 HELIX KIT | 1 |
| 6 | 4177842 | STUD BOLT M12X638KIT | 1 |
| 6.1 | | > TIE BOLT M12-638x18x30-1.4057 | 1 |
| 6.2 | 2094647 | > NUT M12 M12 ISO4032 VP. | 1 |
| 6.3 | 2123557 | > WASHER CS-12.4-24-1.6-NFE25 (4 PIECES) | 1 |
| 7 | 4214481 | STATIONARY RING HOLDER HELIX D27 ReDTC | 1 |
| 7.2 | 4214479 | > STATIONARY RING HOLDER HELIX D27 VP. | 1 |
| 7.3 | 4176513 | > O-RING FOR PUMP JACKET VP. | 1 |
| 8 | 4212724 | FILING/PURGING PLUG HELIX ReDTC KIT | 1 |
| 8.1 | | > FILLING PLUG MVI6"-304 | 1 |
| 8.2 | 4177800 | > O-RING EPDM PLUG HELIX VP. | 1 |
| 9 | 4214483 | MECH.SEAL HELIX6-10-16 O/E ReDTC KIT | 1 |
| 9.1 | 4177801 | > MECH.SEAL HELIX6-10-16 O/E VP. | 1 |
| 7.3 | 4176513 | > O-RING FOR PUMP JACKET VP. | 1 |
| 10 | 4177843 | HOUSING PIPES D.152X510 1.4307 KIT | 1 |
| 7.3 | 4176513 | > O-RING FOR PUMP JACKET VP. | 1 |
| 10.1 | | > HOUSING-PIPE Ø152-M+1012/1609-304 | 1 |
| 11 | 4174087 | CENTERING STAGE-RETURN HELIX6 1.4301VP. | 1 |
| 12 | 4214486 | SHAFT EQUIPMENT HELIX V6 ReDTC KIT | 1 |
| 12.1 | | > NUT-H-M10-A4.70 | 1 |
| 12.2 | | > SERRATED LOCK WASHER M+6M3-316L | 1 |
| 12.3 | | > 1/2-SNAP-RING-6/10M3-316L | 1 |
| 12.4 | | > STOP-RUSH-1/2-D16xd2-M+316 | 1 |
| 4.11 | | > SCREW CHC-M6X14-8.8-ISO4762-GEOMET500A | 1 |
| 4.12 | | > WASHER D.24 L6U ZINK | 1 |
| 13 | | HYDRAULIC HELIX V 611 1.4307 | 1 |

| Item | Article no. | Description | Quantity |
|---|---|---|---|
| 14 | 4214510 | SHAFT D.16X578 HELIX 1.4057 VP. | 1 |
| 15 | 4217897 | PUMP HOUSING HELIX DN32 PN16 1.4301 KIT | 1 |
| 7.3 | 4176513 | > O-RING FOR PUMP JACKET VP. | 1 |
| 15.1 | | > BLASTING PPE HOUSING V-PN16-DN32-5"-304 | 1 |
| 15.2 | 4217891 | > COUNTER FLANGE-G1"1/4-PN16-GJL KIT | 1 |
| 15.3 | 4171321 | > PRIMING/DRAIN PLUG EPDM HELIX KIT | 1 |
| 16 | 4177964 | BASEPLATE HELIX V2/4/6 PN16 VP. | 1 |

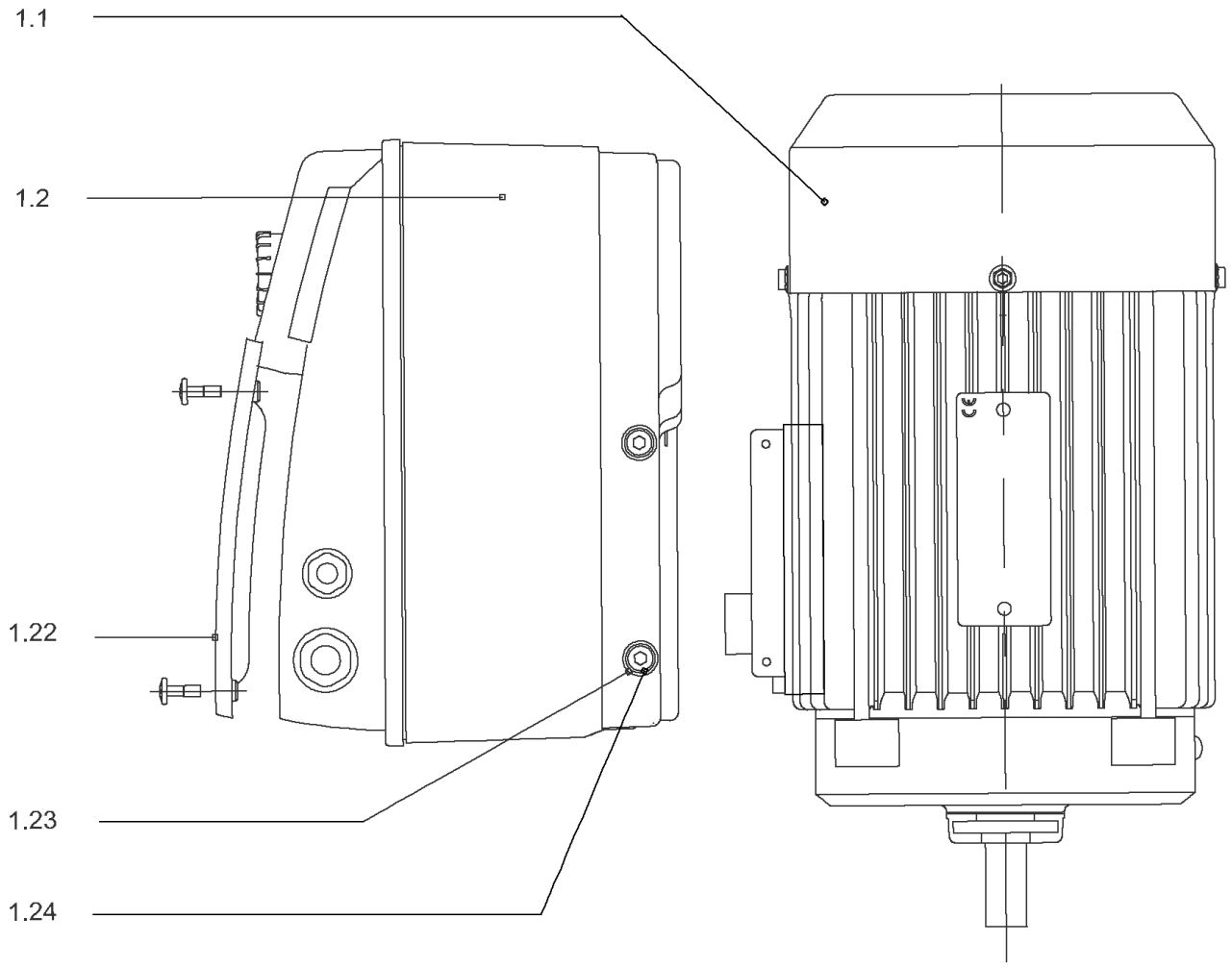
1.1
1.2
1.22
1.23
1.24

## DRIVE HELIX-VE611-IE4-WE KIT

| Item | Article no. | Description | Quantity |
|---|---|---|---|
| 1.1 | 4207924 | MOTOR 4/2/112 3~ 380V 60HZ IE4 WE VP. | 1 |
| | | SPARE PARTS MOTOR:ON REQUEST | 1 |
| 1.2 | 4209605 | MODULE HELIX-VE611-IE4-WE KIT | 1 |
| 1.22 | 2054227 | > MODULE COVER/GASKET TL3/4 KIT | 1 |
| 1.23 | 4215716 | > SCREW M5X16 DIN912 8.8 A2A (4pieces) VP. | 1 |
| 1.24 | 2057978 | > RONDELLE A5,3 DIN6797 FST ZN (4 PIECES) | 1 |

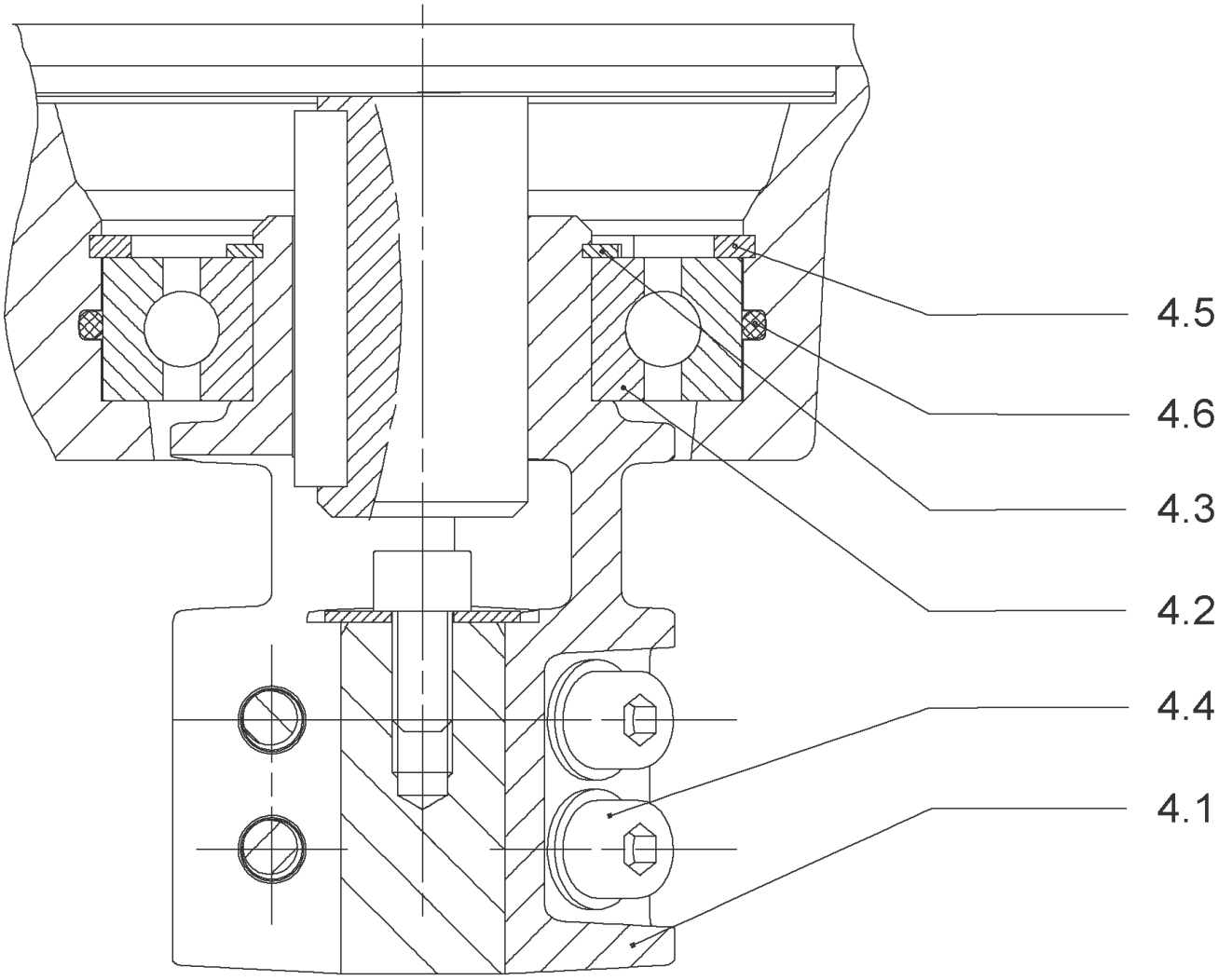
4.5
4.6
4.3
4.2
4.4
4.1

## COUPLING D.16XD.28 FT130 HELIX KIT (4159710)

| Item | Article no. | Description | Quantity |
|---|---|---|---|
| 4.1 | | COUPLING M+ Ø16XØ28 FT130 MACHINED | 1 |
| 4.2 | 2131022 | BALL BEARING 6209/ZZ-C3(HT)VP. | 1 |
| 4.3 | 4233930 | CIRCLIP-FOR-BORES-D45x1,75 VP. | 1 |
| 4.4 | 4157726 | SCREW KIT M8X30 (4 PIECES) | 1 |
| 4.5 | 4234252 | CIRCLIPS 85X3 VP. | 1 |
| 4.6 | 4234243 | O-RING 85X3 VP. | 1 |
| | | NOMEL CONTACT WASHER 8x16x1,4 STEEL ZC | 1 |

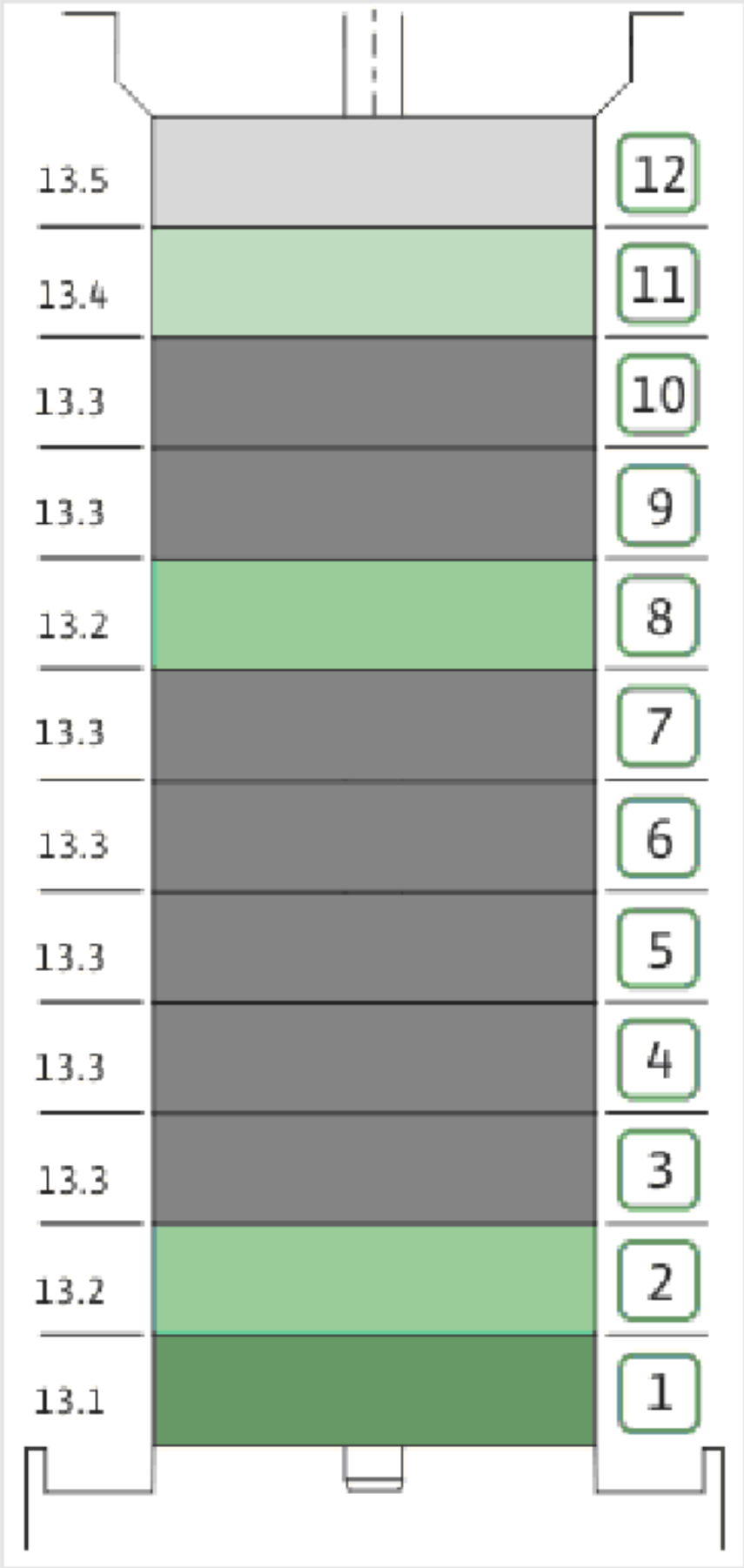
13.5
13.4
13.3
13.3
13.2
13.3
13.3
13.3
13.3
13.3
13.2
13.1
12
11
10
9
8
7
6
5
4
3
2
1

## HYDRAULIC HELIX V 611 1.4307

| Item | Article no. | Description | Quantity |
|---|---|---|---|
| 13.1 | 4174084 | STAGE HELIX 6 1.4301 KIT | 1 |
| | | > MACH.STG-CASING-WOGV-WNR-M+6-304 | 1 |
| | | > IMPELLER-M+6-304 | 1 |
| 13.2 | 4174089 | INTERMEDIATE STAGE HELIX 6 1.4301 KIT | 1 |
| | | > MACH.BEARING-STG-CASING-WNR-M+6-304 | 1 |
| | | > IMPELLER-M+6-304 | 1 |
| | | > SHAFT SLEEVE-SPACER-Ø19,35x18,465-304 | 1 |
| | | > SHAFT-SLEEVE-D16xD20x18-CW | 1 |
| 13.3 | 4174090 | INTERMEDIATE STAGE HELIX 6 1.4301 KIT | 1 |
| | | > MACH.STD-STG-CASING-WGV+NR-M+6-304 | 1 |
| | | > IMPELLER-M+6-304 | 1 |
| | | > IMPELLER SPACER Ø16,05X19,45-L36,465-304 | 1 |
| 13.4 | 4174092 | EMPTY STAGE HELIX6 1.4301KIT | 1 |
| | | > MACH.STD-STG-CASING-WGV+NR-M+6-304 | 1 |
| | | > FLAT WASHER-D16.1XD22X1.2-316L | 1 |
| | | > IMPELLER SPACER Ø16,05X19,45-L36,465-304 | 1 |
| 13.5 | 4174091 | STAGE HELIX 6 1.4301 KIT | 1 |
| | | > MACH.STG-CASING-WOGV-WNR-M+6-304 | 1 |
| | | > IMPELLER-M+6-304 | 1 |
| | | > IMPELLER SPACER Ø16,05X19,45-L36,465-304 | 1 |

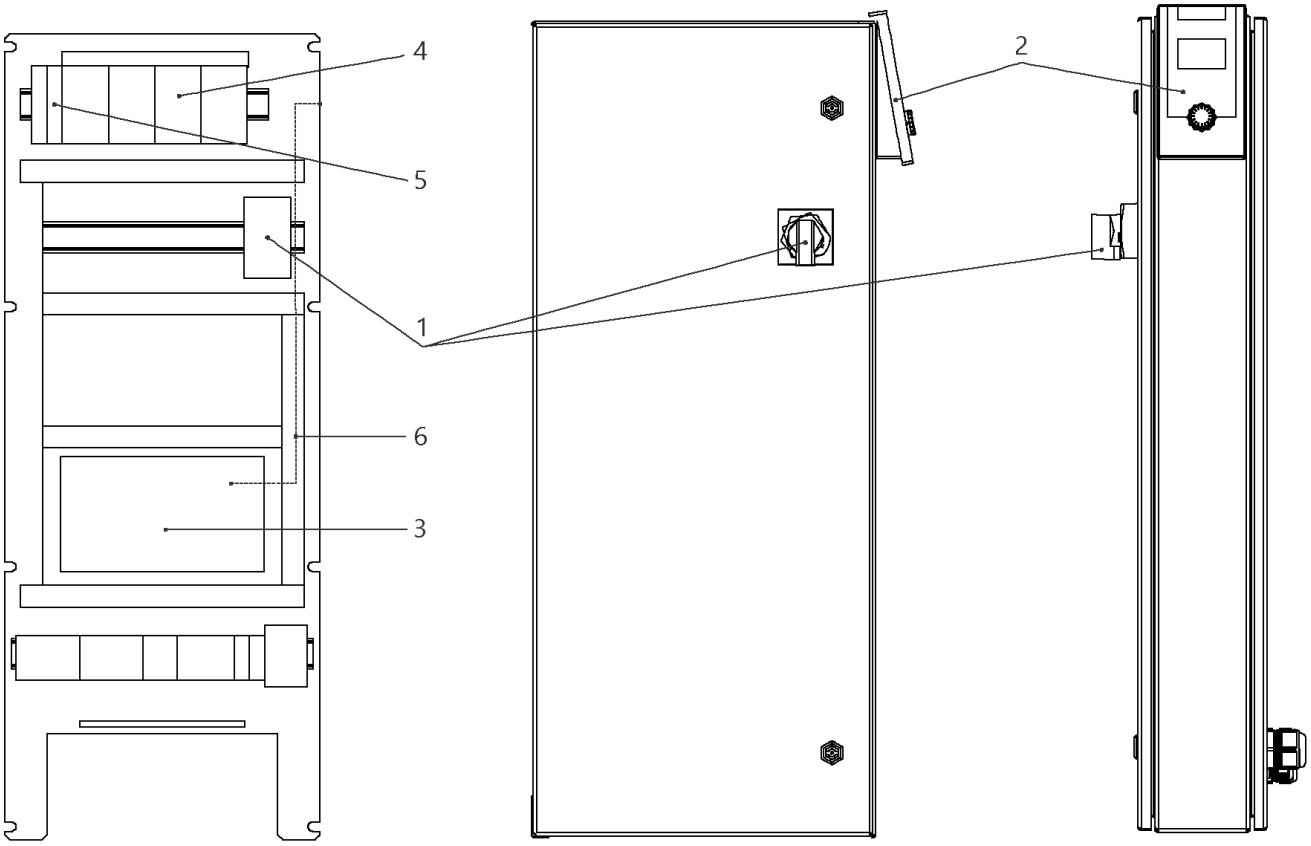
4
5
1
6
3
2

## W-CTRL-SCE-B-4x4,0KW-T4-FM-ND2

| Item | Article no. | Description | Quantity |
|---|---|---|---|
| 1 | 2104473 | MAIN SWITCH OT63F3 L105 KIT | 1 |
| 2 | 4184784 | CONTROL PANEL HMI SC KIT | 1 |
| 2 | 4185259 | ASSEMBLY DISPLAY SC PKG VP. | 1 |
| 3 | 4185257 | ASSEMBLY CPU SCe Booster VP. | 1 |
| 4 | 2051217 | AUTOM.CIRCUIT BREAKER S203 B16 TO7,5kW | 1 |
| 5 | 2046288 | CIRCUIT BREAKER S201 B16 | 1 |
| 6 | 4194956 | PATCH CABLE RJ45 CAT6 1,0M BLUE SC-PANEL | 1 |

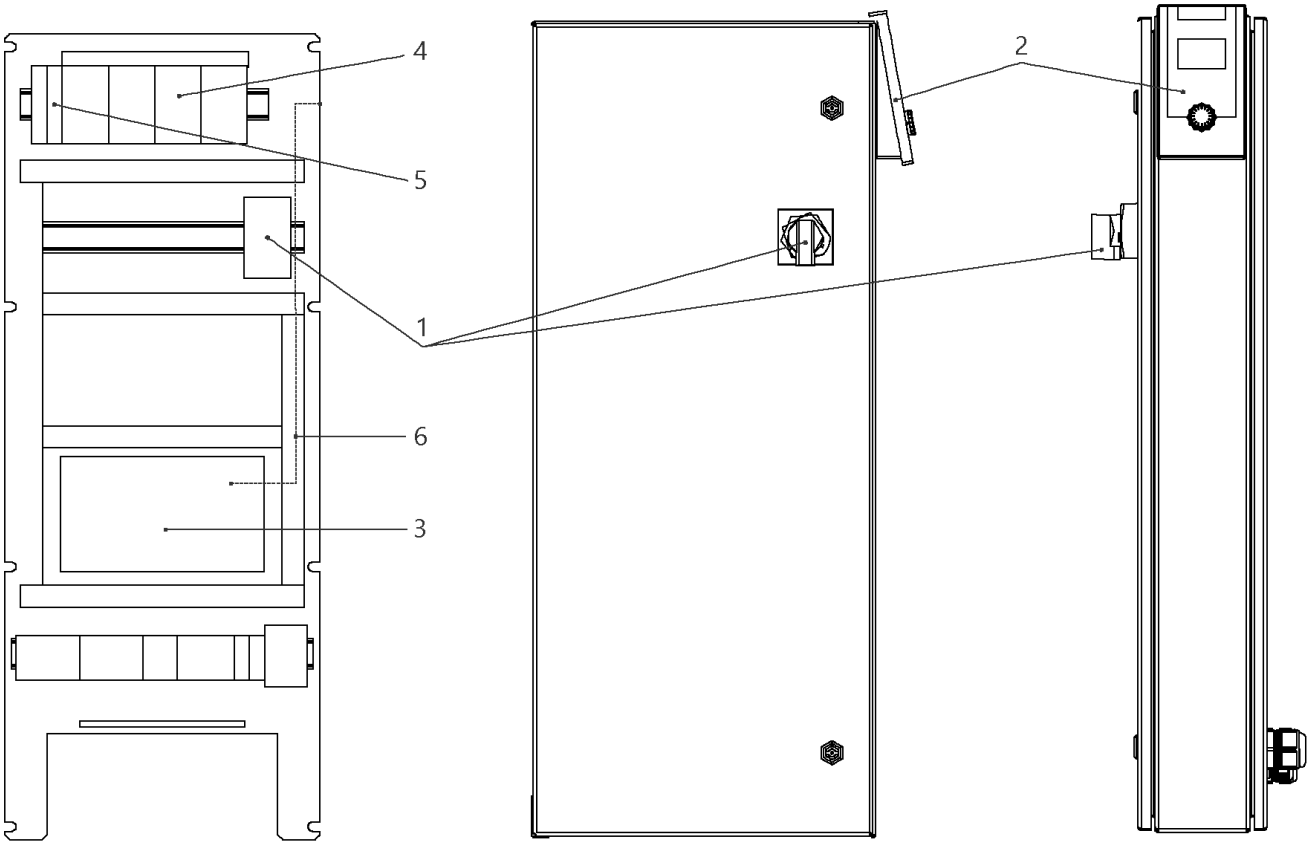
4
5
1
6
3
2

## W-CTRL-SCE-B-4x13A-T34-FM-ND2-AVC-PKG (2541907)

| Item | Article no. | Description | Quantity |
|---|---|---|---|
| 1 | 2104477 | MAIN SWITCH OT80F3 L105 KIT | 1 |
| Note: TO / BIS / JUSQU'AU 30/06/2015 | | | |
| 1 | 2104473 | MAIN SWITCH OT63F3 L105 KIT | 1 |
| Note: FROM / AB / À PARTIR DU 01/07/2015 | | | |
| 2 | 4184784 | CONTROL PANEL HMI SC KIT | 1 |
| 2 | 4185259 | ASSEMBLY DISPLAY SC PKG VP. | 1 |
| Note: DISPLAY ALONE / PLATINE SEULE | | | |
| 3 | 4185257 | ASSEMBLY CPU SCe Booster VP. | 1 |
| 5 | 2046288 | CIRCUIT BREAKER S201 B16 | 1 |
| 4 | 2051217 | AUTOM.CIRCUIT BREAKER S203 B16 TO7,5kW | 1 |
| 6 | 4194956 | PATCH CABLE RJ45 CAT6 1,0M BLUE SC-PANEL | 1 |

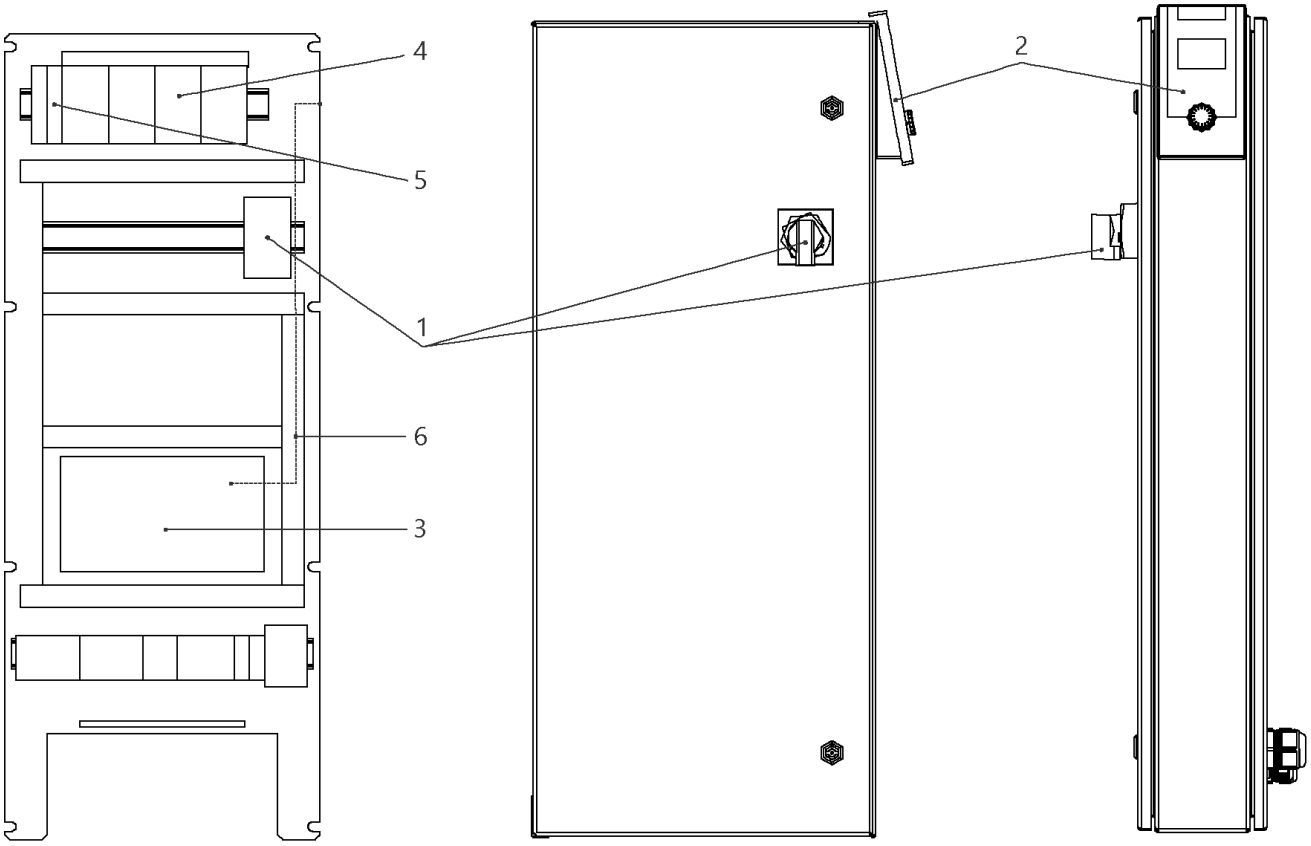
4
5
1
6
3
2

## W-CTRL-SCE-B-4x10A-T34-FM-ND2-AVC-PKG (2541903)

| Item | Article no. | Description | Quantity |
|---|---|---|---|
| 1 | 2104473 | MAIN SWITCH OT63F3 L105 KIT | 1 |
| 2 | 4184784 | CONTROL PANEL HMI SC KIT | 1 |
| 2 | 4185259 | ASSEMBLY DISPLAY SC PKG VP. | 1 |
| Note: DISPLAY ALONE / PLATINE SEULE | | | |
| 3 | 4185257 | ASSEMBLY CPU SCe Booster VP. | 1 |
| 5 | 2046288 | CIRCUIT BREAKER S201 B16 | 1 |
| 4 | 2119861 | AUTOMATIC CIRCUIT BREAKER S203 B13 3POL. | 1 |
| 6 | 4194956 | PATCH CABLE RJ45 CAT6 1,0M BLUE SC-PANEL | 1 |

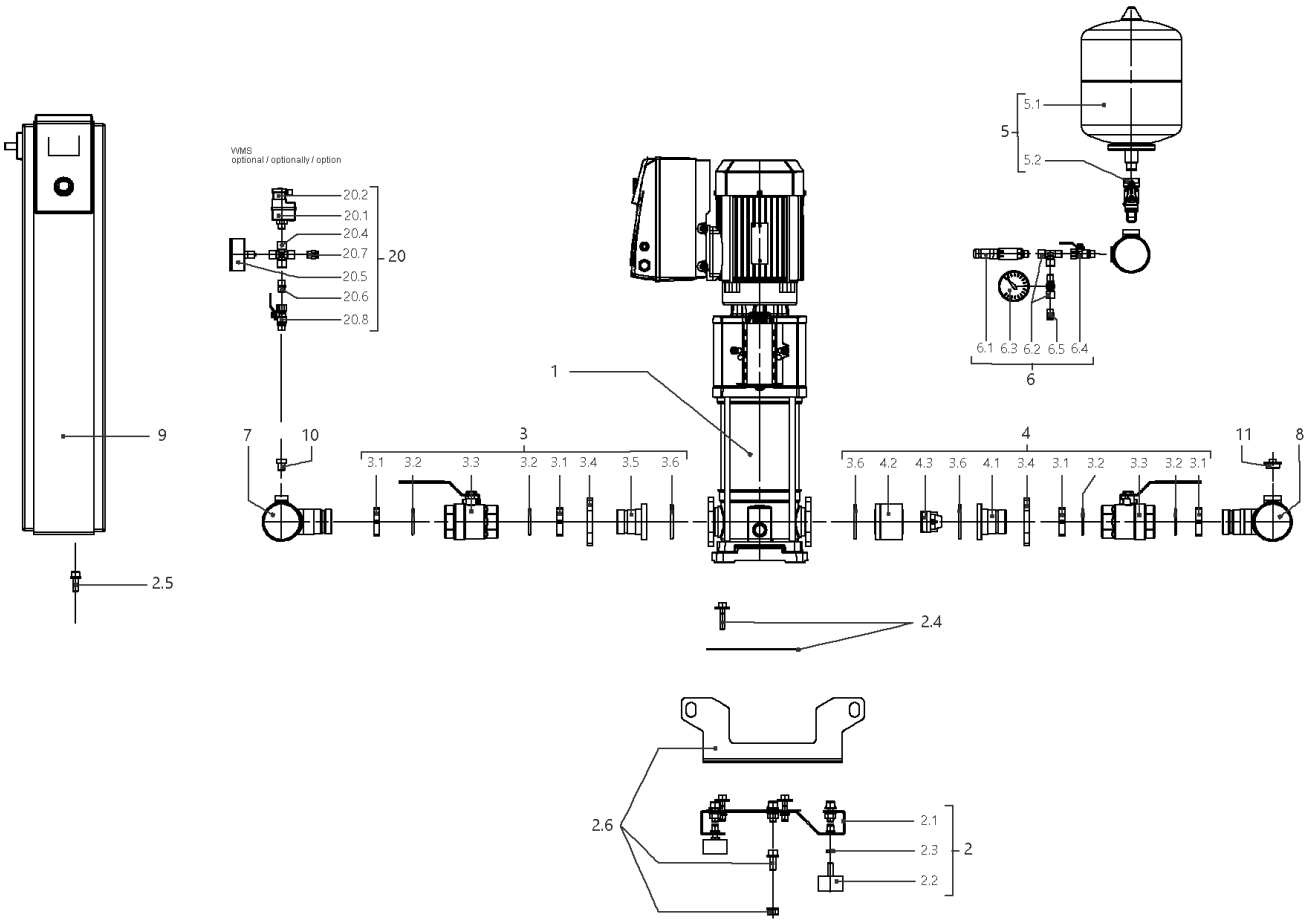
VVMS
optional / optionally / option
20.2
20.1
20.4
20.7
20.5
20.6
20.8
20
5.1
5
5.2
6.1 6.3 6.2 6.5 6.4
6
1
9
7
10
3
3.1 3.2 3.3 3.2 3.1 3.4 3.5 3.6
4
3.6 4.2 4.3 3.6 4.1 3.4 3.1 3.2 3.3 3.2 3.1
11
8
2.5
2.4
2.6
2.1
2.3
2.2
2

## SiBoost Smart 4HELIX VE1002 (2536353)

| Item | Article no. | Description | Quantity |
|---|---|---|---|
| 1 | | HELIX VE1002-1/16/E/S | 1 |
| Note: TO / BIS / JUSQU'AU 31/03/2016 | | | |
| 1 | 4201547 | HELIX VE1002-1/16/E/S | 1 |
| Note: FROM / AB / À PARTIR DU 01/04/2016 | | | |
| 2 | 4197134 | BASE PLATE DE4 1450x420 KIT | 1 |
| Note: TO / BIS / JUSQU'AU 28/02/2013 | | | |
| 2.1 | | > BASEPLATE_4x4/6/10/16V_E300_BOX_150 | 1 |
| 2.2 | 2028654 | > VIBRATION DAMPER D.50X30 M10X28 | 1 |
| 2.3 | 2028281 | > NUT M10 DIN936 (ISO4035) 17H VZ | 1 |
| 2.4 | 4197083 | > HOLDER PUMP Helix 10/16 KIT | 1 |
| 2.5 | 4197084 | > HOLDER SWITCHBOX WILO Smart Control KIT | 1 |
| 2.6 | 4197117 | > LIFTING Siboost HELIX SC KIT | 1 |
| 2 | 4200143 | BASE PLATE DE4 1450x300 KIT | 1 |
| Note: FROM / AB / À PARTIR DU 01/03/2013 - TO / BIS / JUSQU'AU 06/02/2014 | | | |
| 2.1 | | > BASEPLATE_4x4/6/10V_E300_1450x300BOX_150 | 1 |
| 2.2 | 2028654 | > VIBRATION DAMPER D.50X30 M10X28 | 1 |
| 2.3 | 2028281 | > NUT M10 DIN936 (ISO4035) 17H VZ | 1 |
| 2.4 | 4199875 | > HOLDER PUMP Siboost Helix V2/4 KIT | 1 |
| 2.5 | 4197084 | > HOLDER SWITCHBOX WILO Smart Control KIT | 1 |
| 2.6 | 4197085 | > LIFTING Siboost HELIX SC KIT | 1 |
| 2 | 4197128 | BASE PLATE DE4 1450x300 KIT | 1 |
| Note: FROM / AB / À PARTIR DU 07/02/2014 | | | |
| 2.1 | | > BASEPLATE_4x4/6/10V_E300_1450x300BOX_150 | 1 |
| 2.2 | 2028654 | > VIBRATION DAMPER D.50X30 M10X28 | 1 |
| 2.3 | 2028281 | > NUT M10 DIN936 (ISO4035) 17H VZ | 1 |
| 2.4 | 4197083 | > HOLDER PUMP Helix 10/16 KIT | 1 |
| 2.5 | 4197084 | > HOLDER SWITCHBOX WILO Smart Control KIT | 1 |
| 2.6 | 4197085 | > LIFTING Siboost HELIX SC KIT | 1 |
| 3 | 4197072 | SUCTION SIDE Siboost Helix10/16 KIT | 1 |
| 3.1 | 2032623 | > NUT G1 1/2"SW55 MS | 1 |
| 3.2 | 2032616 | > O-RING ID.44X3,53N DIN3771 E7502 | 1 |
| 3.2 | 2534877 | > BALL TAP KDW40-H G11/2I-I-DN40 DVGW | 1 |
| 3.4 | 2032626 | > OVAL FLANGE D52-LK100 ST-VZ | 1 |
| 3.5 | 2032627 | > UNION INSERT DN40 LAPPED FLANGE | 1 |

| Item | Article no. | Description | Quantity |
|---|---|---|---|
| 3.6 | 2032628 | > O-RING ID.56,52X5,33N DIN3771 E7502 | 1 |
| 4 | 4197074 | DELIVERY SIDE Siboost Helix V10 KIT | 1 |
| 3.1 | 2032623 | > NUT G1 1/2"SW55 MS | 1 |
| 3.2 | 2032616 | > O-RING ID.44X3,53N DIN3771 E7502 | 1 |
| 3.3 | 2534877 | > BALL TAP KDW40-H G11/2I-I-DN40 DVGW | 1 |
| 3.4 | 2032626 | > OVAL FLANGE D52-LK100 ST-VZ | 1 |
| 4.1 | 2054316 | > UNION INSERT DN40 LAPPED FLANGE(W.SLOT) | 1 |
| 4.2 | 2054317 | > HOUSING F.NON RETURN VALVE(RV-IN) DN40 | 1 |
| 4.3 | 2032631 | > NON-RETURN-DEVICE DN40 (MTR)TYP RV-IN | 1 |
| 3.6 | 2032628 | > O-RING ID.56,52X5,33N DIN3771 E7502 | 1 |
| 5 | 2032642 | DIAPHREM TANK 8L/PN16 DIN4807/T5 KIT | 1 |
| 5.1 | 2045914 | > DIAPHREM TANK 8L TYP-DD 16BAR | 1 |
| 5.2 | 2027853 | > FLOW FITTING G3/4 FOR DIAPHRAGM VES. | 1 |
| 6 | 4197076 | PRESSURE SENSOR/ GAUGE 0-16BAR KIT | 1 |
| 6.1 | 2085909 | > PRESS.SENSOR 1/4" 0-16BAR 4-20MA VP. | 1 |
| 6.2 | 4197077 | > T-PIECE 1/4" VP. | 1 |
| 6.3 | 2028692 | > PRESSURE GAUGE NG63-PN16-G1/4 | 1 |
| 6.4 | 2028291 | > BALL TAP R1/4" PN42 GIACOMINI R254DL | 1 |
| 6.5 | 2028691 | > BLOWGUN 1/4" MS 30BAR VP. | 1 |
| 7 | 4197129 | PIPE DE4 R3''-4x11/2"+2x1/4x1200 VP. | 1 |
| 8 | 4197130 | PIPE DE4 R3''-4x11/2"+2x1/4+1x3/4x1200 | 1 |
| 9 | | W-CTRL-SCE-B-4x1,1KW-T4-FM-ND2 | 1 |
| Note: TO / BIS / JUSQU'AU 28/02/2013 | | | |
| 9 | | W-CTRL-SCE-B-4x0,55-1,5KW-T4-FM-ND1 | 1 |
| Note: FROM / AB / À PARTIR DU 01/03/2013 - TO / BIS / JUSQU'AU 18/05/2014 | | | |
| 9 | 2541915 | W-CTRL-SCE-B-4x10A-T34-FM-ND1-AVC-PKG | 1 |
| Note: FROM / AB / À PARTIR DU 19/05/2014 | | | |
| 10 | 4197079 | PLUG G1/4"x10 AISI304 KIT | 1 |
| 11 | 2032654 | PLUG R3/4" MS VIEGA 1751 | 1 |
| 20 | | ASSEMBLY WMS. DE-EB. +VP | 1 |
| 20.1 | 2028652 | > PRESSURE SWITCH PS3-ASR 1/(1,3) VP. | 1 |
| 20.2 | 2130983 | > PLUG PS3-415 WITH KABEL 1,5M 2NO VP. | 1 |
| 20.4 | 2028290 | > CROSSPIECE R1/4" MS-NICKEL | 1 |
| 20.5 | 2028687 | > PRESSURE GAUGE NG63 R1/4" HI.0-6BAR | 1 |

| Item | Article no. | Description | Quantity |
|---|---|---|---|
| 20.6 | 2054268 | > DUAL NIPPLE G1/4" x G1/4" MS VP. | 1 |
| 20.7 | 2028691 | > BLOWGUN 1/4" MS 30BAR VP. | 1 |
| 20.8 | 2028291 | > BALL TAP R1/4" PN42 GIACOMINI R254DL | 1 |

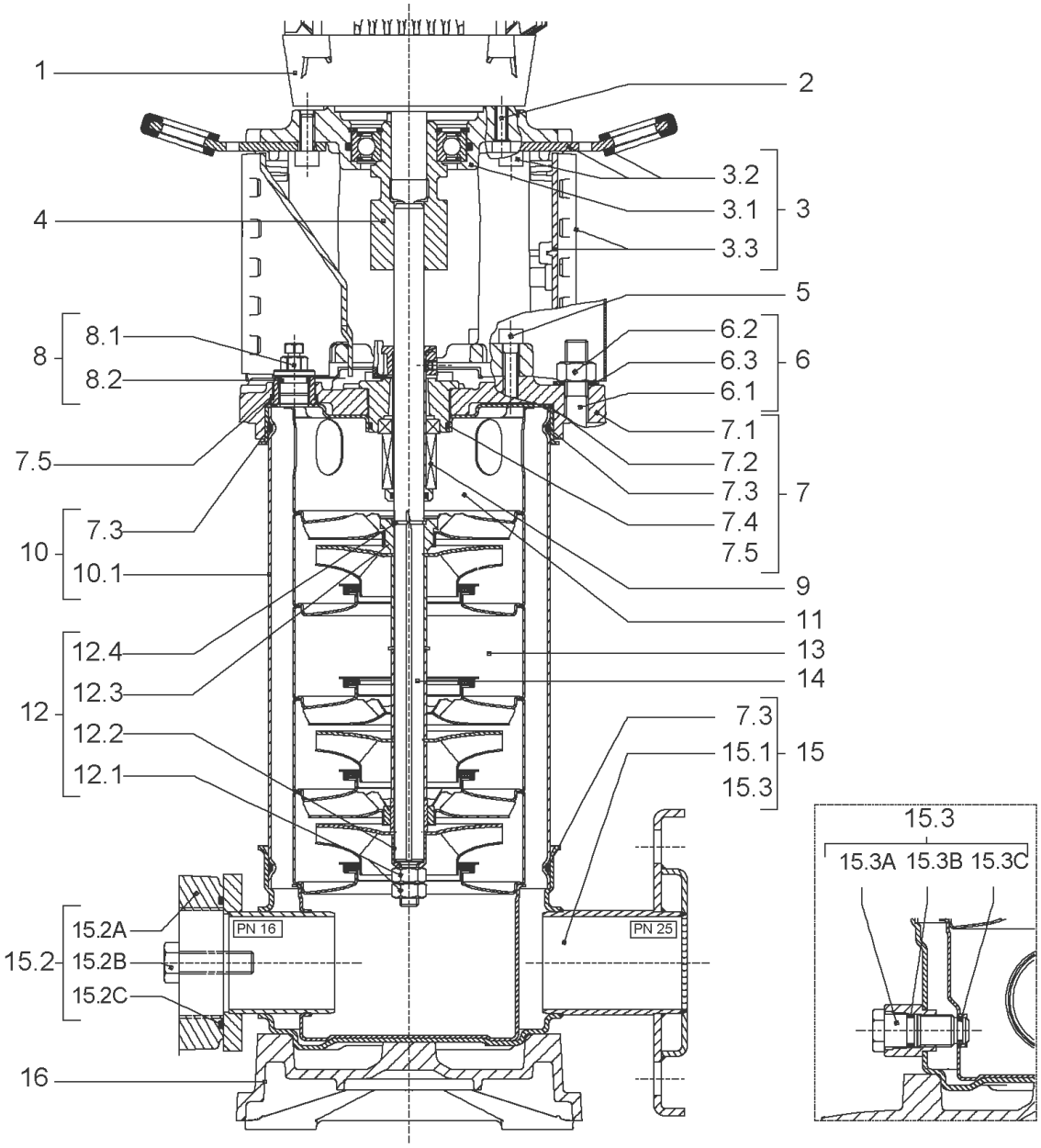
1
2
3.2
3.1
3
3.3
4
5
8.1
8
8.2
6.2
6.3
6
6.1
7.1
7.5
7.2
7.3
7
7.4
7.3
10
7.5
10.1
9
11
12.4
13
12.3
14
12
12.2
7.3
15.1
15
12.1
15.3
15.3
15.3A 15.3B 15.3C
15.2A
PN 16
PN 25
15.2
15.2B
15.2C
16

| Item | Article no. | Description | Quantity |
|---|---|---|---|
| 1 | | DRIVE HELIX-VE1002-IE2-WE KIT | 1 |
| Note: MOTOR BRAND WILO ELEC | | | |
| 1 | | DRIVE HELIX-VE1002-IE2-ATB KIT | 1 |
| Note: MOTOR BRAND ATB | | | |
| 1 | | DRIVE HELIX-VE1002-IE4-WE KIT | 1 |
| Note: MOTOR BRAND WILO ELEC | | | |
| 2 | 4159702 | SCREW M6X30 (4 PIECES) | 1 |
| 3 | 4172790 | EQUIPED LANTERN NEXIS FT 100 KIT | 1 |
| 3.1 | | > M+5_6_LANTERN_ONE-PIECE_FT100_CATA | 1 |
| 3.2 | 2127604 | > EYELET CPL.FT HELIX(2 PIECES) | 1 |
| 3.3 | 4159692 | > COUPLING PROTECTOR FT HELIX KIT | 1 |
| 4 | 4159708 | COUPLING D.16XD.19 FT100 HELIX KIT | 1 |
| 5 | 4159707 | SCREW M8X30 (4 PIECES) | 1 |
| 6 | 4177803 | STUD BOLT M12X263 KIT | 1 |
| 6.1 | | > TIE BOLT M12-263x18x30-1.4057 | 1 |
| 6.2 | 2094647 | > NUT M12 M12 ISO4032 VP. | 1 |
| 6.3 | 2123557 | > WASHER CS-12.4-24-1.6-NFE25 (4 PIECES) | 1 |
| 7 | 4210143 | STATIONARY RING HOLDER HELIX 6" EPDM | 1 |
| 7.2 | 2127607 | > STATIONARY RING HOLDER 6" HELIX 1.4301 V | 1 |
| 7.3 | 4176513 | > O-RING FOR PUMP JACKET VP. | 1 |
| 7.4 | 2127603 | > O-RING ID.37,6x2,4 EPDM VP. | 1 |
| 7.5 | 2127602 | > O-RING ID.21,35x2 EPDM VP. | 1 |
| 8 | 4159686 | FILING/PURGING PLUG HELIX EPDM KIT | 1 |
| 9 | 4171327 | SEAL-KIT-HELIX6-10-16 O/E KIT | 1 |
| 10 | 4177804 | HOUSING PIPES D.152X134 1.4301 KIT | 1 |
| 7.3 | 4176513 | > O-RING FOR PUMP JACKET VP. | 1 |
| 10.1 | | > HOUSING-PIPE Ø152-M+1001/02-304 | 1 |
| 11 | 4172791 | CENTERING STAGE-RETURN HELIX10 1.4301VP. | 1 |
| 12 | 4209273 | SHAFT EQUIPMENT HELIX V10 KIT | 1 |
| 12.1 | | > NUT-H-M10-A4.70 | 1 |
| 12.2 | | > SERRATED LOCK WASHER M+10M3-316L | 1 |
| 12.3 | | > IMPELLER STOP RING L33,6-304 | 1 |
| 12.4 | | > STOP-RUSH-1/2-D16xd2-M+316 | 1 |
| 13 | | HYDRAULIC HELIX V 1002 1.4307 | 1 |

| Item | Article no. | Description | Quantity |
|---|---|---|---|
| 14 | 4177807 | SHAFT D.16X255 1.4301 VP. | 1 |
| 15 | 4159682 | PUMP HOUSING HELIX DN50 PN16 1.4301 KIT | 1 |
| 7.3 | 4176513 | > O-RING FOR PUMP JACKET VP. | 1 |
| 15.1 | | > BLASTING PPE HOUSING V-PN16-DN50-304 | 1 |
| 15.2 | 4217893 | > COUNTER FLANGE-G1"1/2-PN16-GJL KIT | 1 |
| 15.3 | 4171321 | > PRIMING/DRAIN PLUG EPDM HELIX KIT | 1 |
| 16 | 4176517 | BASEPLATE V8/10 VP. | 1 |

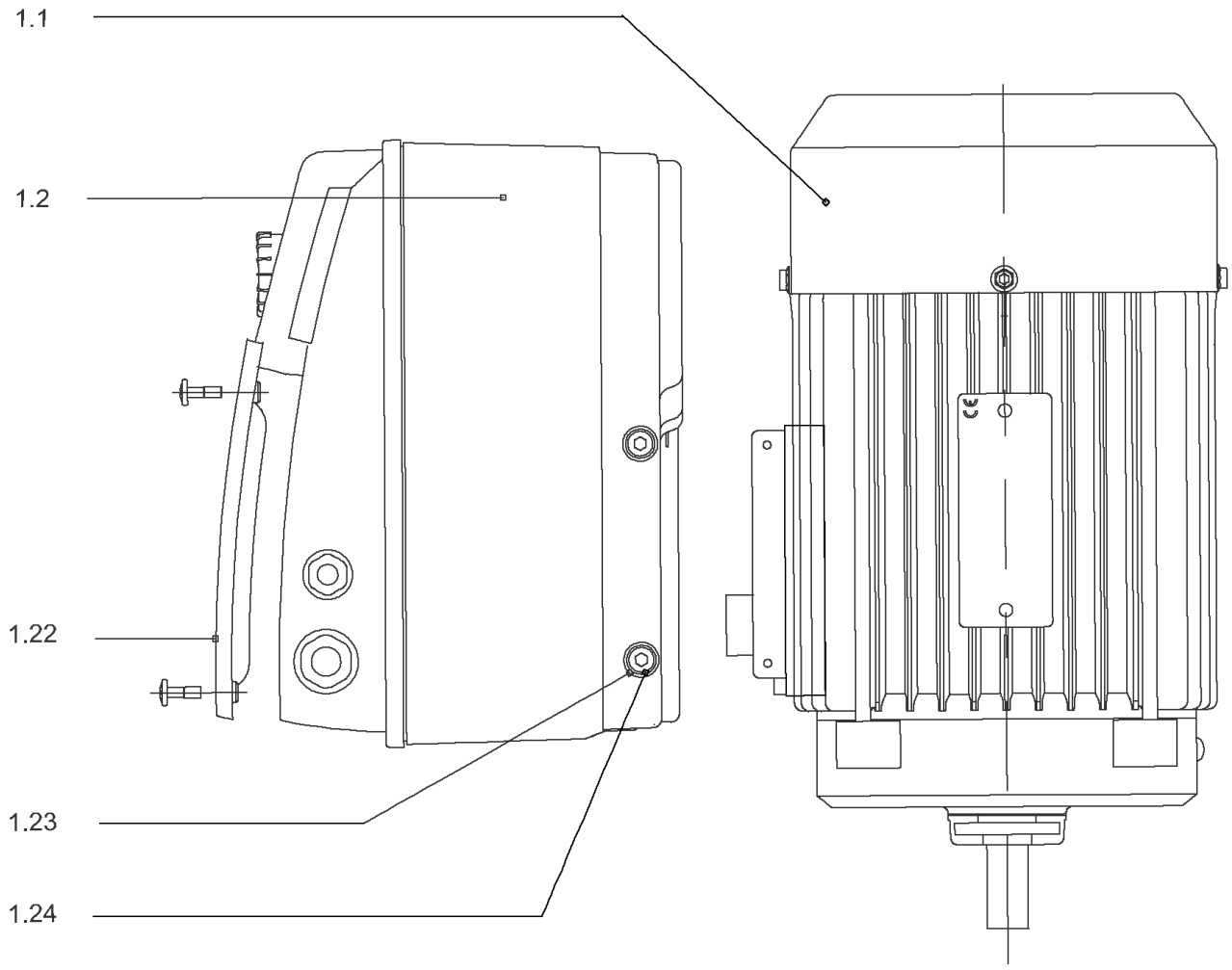
1.1
1.2
1.22
1.23
1.24

## DRIVE HELIX-VE1002-IE2-WE KIT

| Item | Article no. | Description | Quantity |
|---|---|---|---|
| 1.1 | 4184817 | MOTOR 1,1/2/80 3~ 380V 60HZ IE2 WE VP. | 1 |
| | | SPARE PARTS MOTOR:ON REQUEST | 1 |
| 1.2 | 4186942 | MODULE HELIX-VE1002-IE2-WE KIT | 1 |
| 1.22 | 2054372 | > MODULE COVER TL1,TL2+GASKET KIT | 1 |
| 1.23 | 4215716 | > SCREW M5X16 DIN912 8.8 A2A (4pieces) VP. | 1 |
| 1.24 | 2057978 | > RONDELLE A5,3 DIN6797 FST ZN (4 PIECES) | 1 |

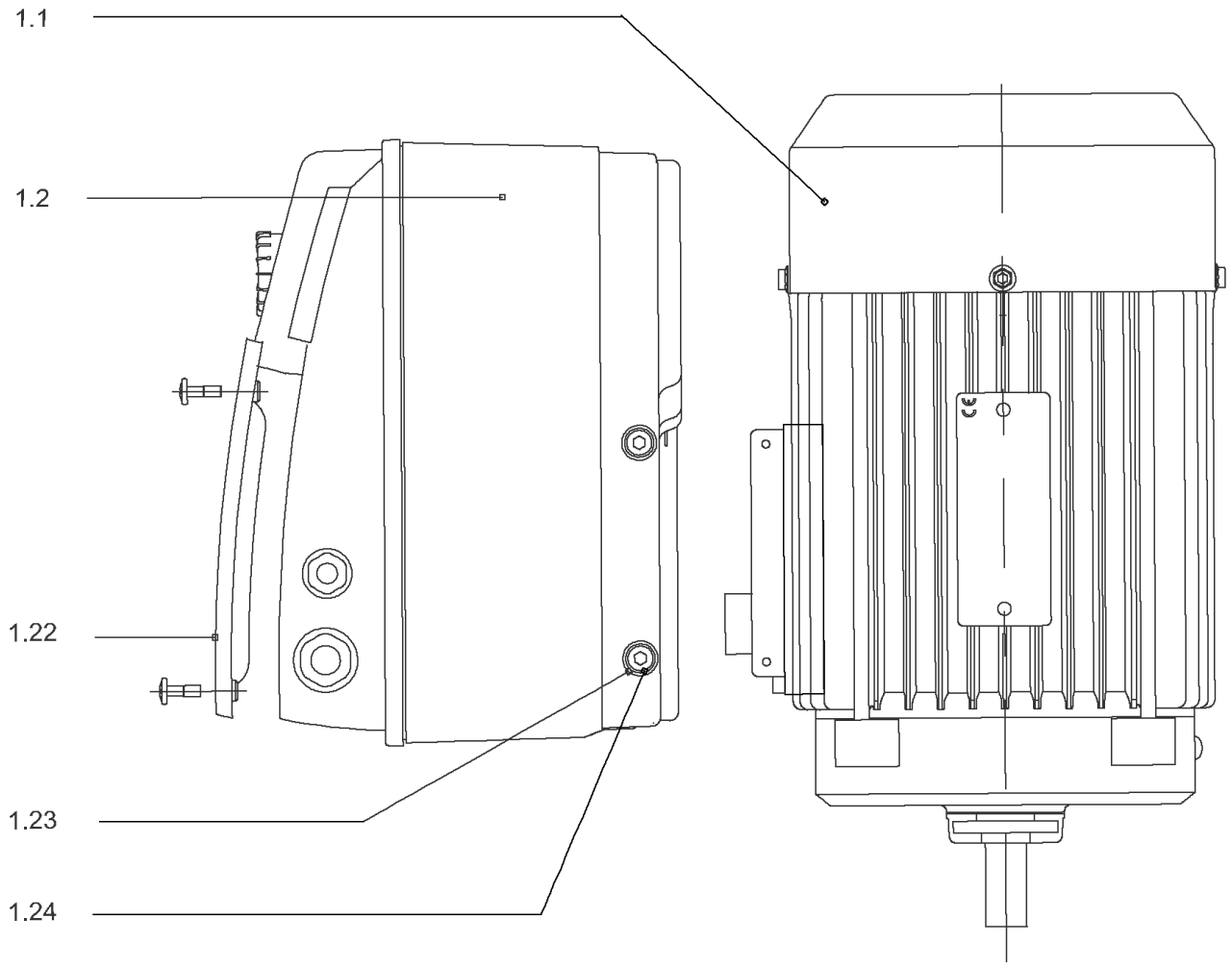
1.1
1.2
1.22
1.23
1.24

## DRIVE HELIX-VE1002-IE2-ATB KIT

| Item | Article no. | Description | Quantity |
|---|---|---|---|
| 1.1 | | M1,1-2T638P55V18-80F10-SU-N19-ADAPT-IE2 | 1 |
| Note: no longer available/nicht mehrlieferbar/n'est plus disponible | | | |
| | | SPARE PARTS MOTOR:ON REQUEST | 1 |
| 1.2 | 4228815 | MODULE HELIX-VE1002-IE2-ATB KIT | 1 |
| 1.22 | 2054372 | > MODULE COVER TL1,TL2+GASKET KIT | 1 |
| 1.23 | 4215716 | > SCREW M5X16 DIN912 8.8 A2A (4pieces) VP. | 1 |
| 1.24 | 2057978 | > RONDELLE A5,3 DIN6797 FST ZN (4 PIECES) | 1 |

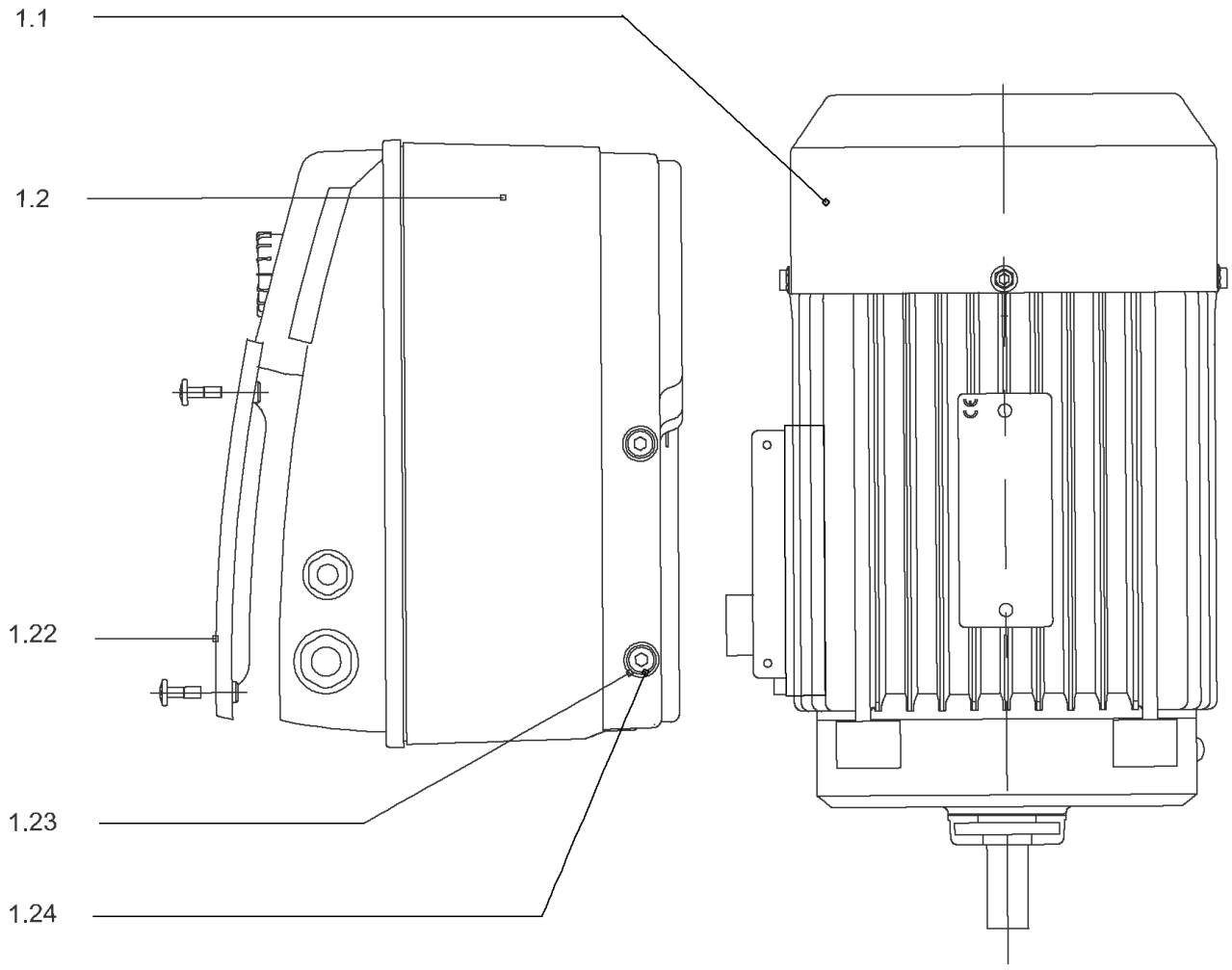
1.1
1.2
1.22
1.23
1.24

## DRIVE HELIX-VE1002-IE4-WE KIT

| Item | Article no. | Description | Quantity |
|---|---|---|---|
| 1.1 | 4207916 | MOTOR 1.1/2/80 3~ 380V 60HZ IE4 WE VP. | 1 |
| | | SPARE PARTS MOTOR:ON REQUEST | 1 |
| 1.2 | 4209600 | MODULE HELIX-VE1002-IE4-WE KIT | 1 |
| 1.22 | 2054372 | > MODULE COVER TL1,TL2+GASKET KIT | 1 |
| 1.23 | 4215716 | > SCREW M5X16 DIN912 8.8 A2A (4pieces) VP. | 1 |
| 1.24 | 2057978 | > RONDELLE A5,3 DIN6797 FST ZN (4 PIECES) | 1 |

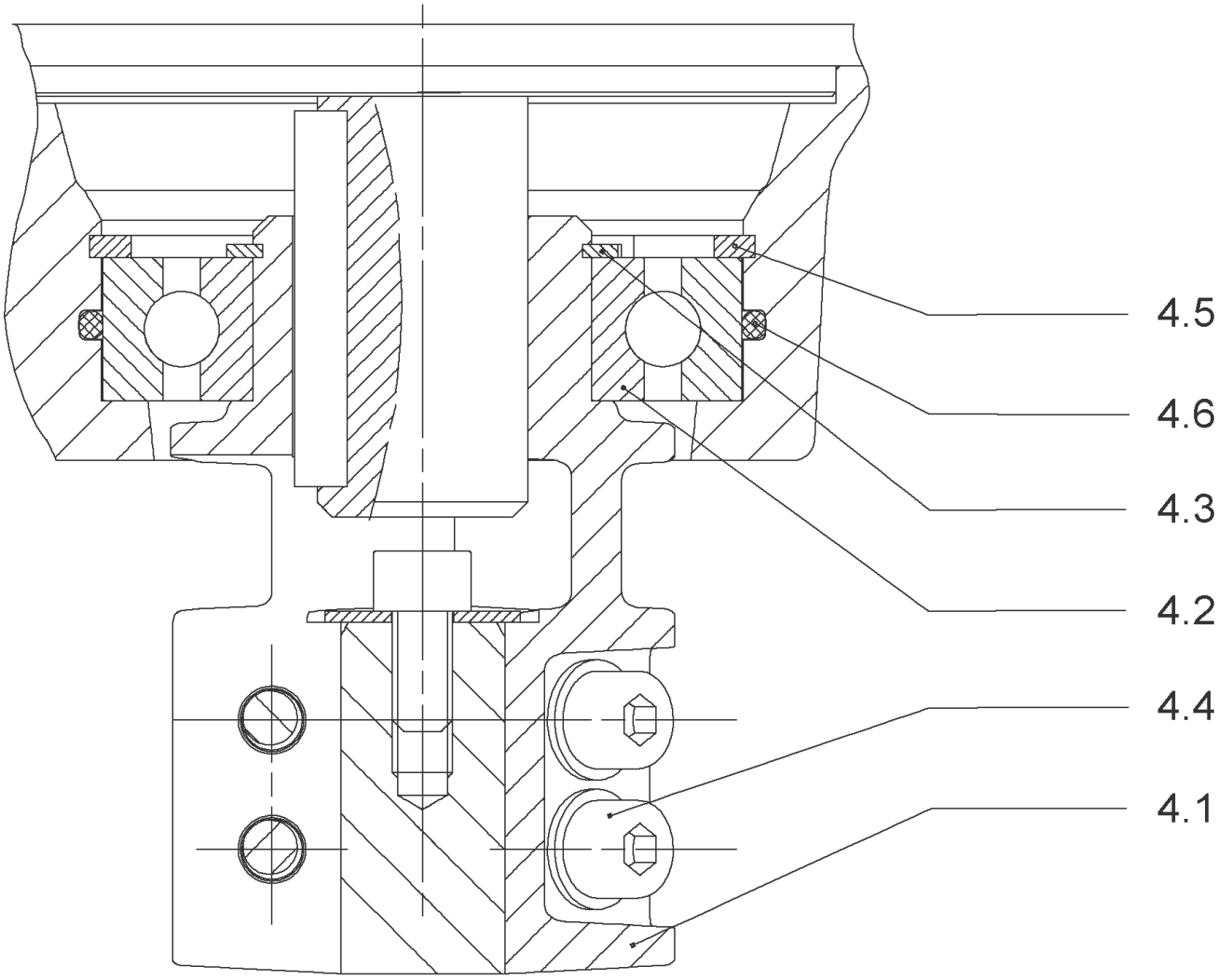
4.5
4.6
4.3
4.2
4.4
4.1

## COUPLING D.16XD.19 FT100 HELIX KIT (4159708)

| Item | Article no. | Description | Quantity |
|---|---|---|---|
| 4.1 | | COUPLING M+ Ø16XØ19 FT100 MACHINED | 1 |
| 4.2 | 2130977 | BALL BEARING 6206/ZZ-C3(HT)VP. | 1 |
| 4.3 | 4234249 | CIRCLIP-FOR-SHAFT-D30x1.5 VP. | 1 |
| 4.4 | 4212716 | SCREW M6X20 KIT (4PIECES) | 1 |
| 4.5 | 4234250 | CIRCLIP-D62x2 VP. | 1 |
| 4.6 | 4234245 | O-RING 63X3 VP. | 1 |
| | | CONTACT-WASHER-6ETR-6,1x12,2x1,8-STEEL | 1 |

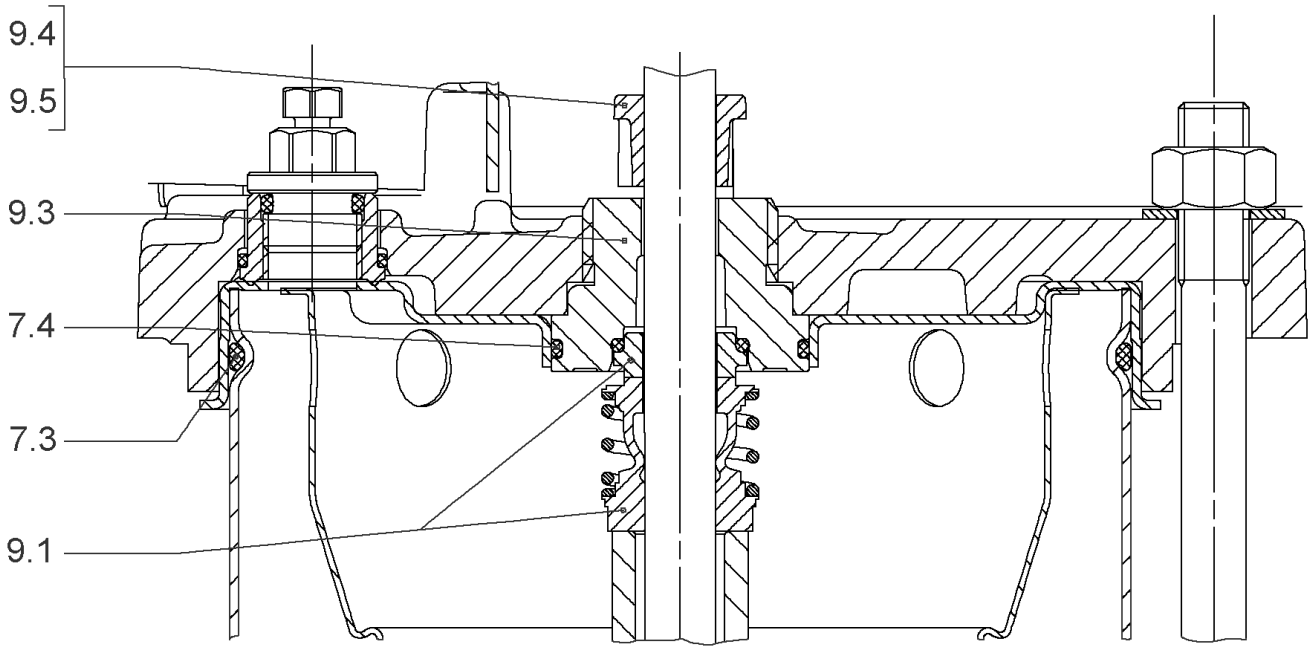
9.4
9.5
9.3
7.4
7.3
9.1

## SEAL-KIT-HELIX6-10-16 O/E KIT (4171327)

| Item | Article no. | Description | Quantity |
|---|---|---|---|
| 7.3 | 4176513 | O-RING FOR PUMP JACKET VP. | 1 |
| 7.4 | 2127603 | O-RING ID.37,6x2,4 EPDM VP. | 1 |
| 9.1 | 4177801 | MECH.SEAL HELIX6-10-16 O/E VP. | 1 |
| 9.3 | 4177798 | MACHINED RING HOLDER M+6" Ø16 304 VP. | 1 |
| 9.5 | 4177799 | MACHINED DRIVE RING Ø16 VP. | 1 |
| 9.4 | 4176520 | SCREW CH M5x5 A4-70 ( 3PIECES ) | 1 |

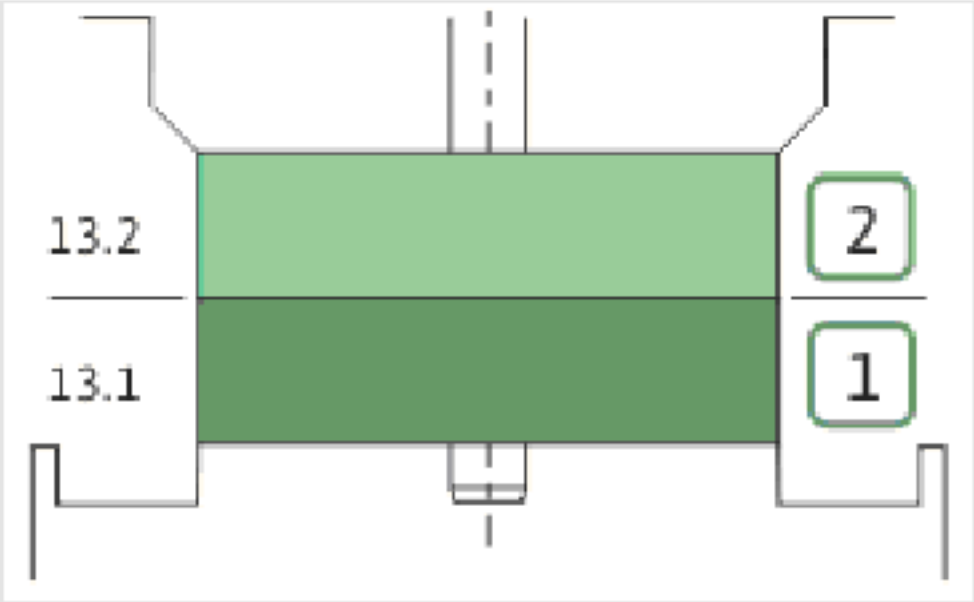
13.2
13.1
2
1

## HYDRAULIC HELIX V 1002 1.4307

| Item | Article no. | Description | Quantity |
|---|---|---|---|
| 13.1 | 4171331 | STAGE HELIX10 1.4301KIT | 1 |
| | | > MACH.STG-CASING-WOGV-WNR-M+10-304 | 1 |
| | | > IMPELLER-M+10-304 | 1 |
| 13.2 | 4172792 | INTERMEDIATE STAGE HELIX 10 1.4301 KIT | 1 |
| | | > MACH.BEARING-STG-CASING-WNR-M+10-304 | 1 |
| | | > IMPELLER-M+10-304 | 1 |
| | | > SHAFT SLEEVE-SPACER-Ø19,35x18,465-304 | 1 |
| | | > SHAFT-SLEEVE-D16xD20x18-CW | 1 |

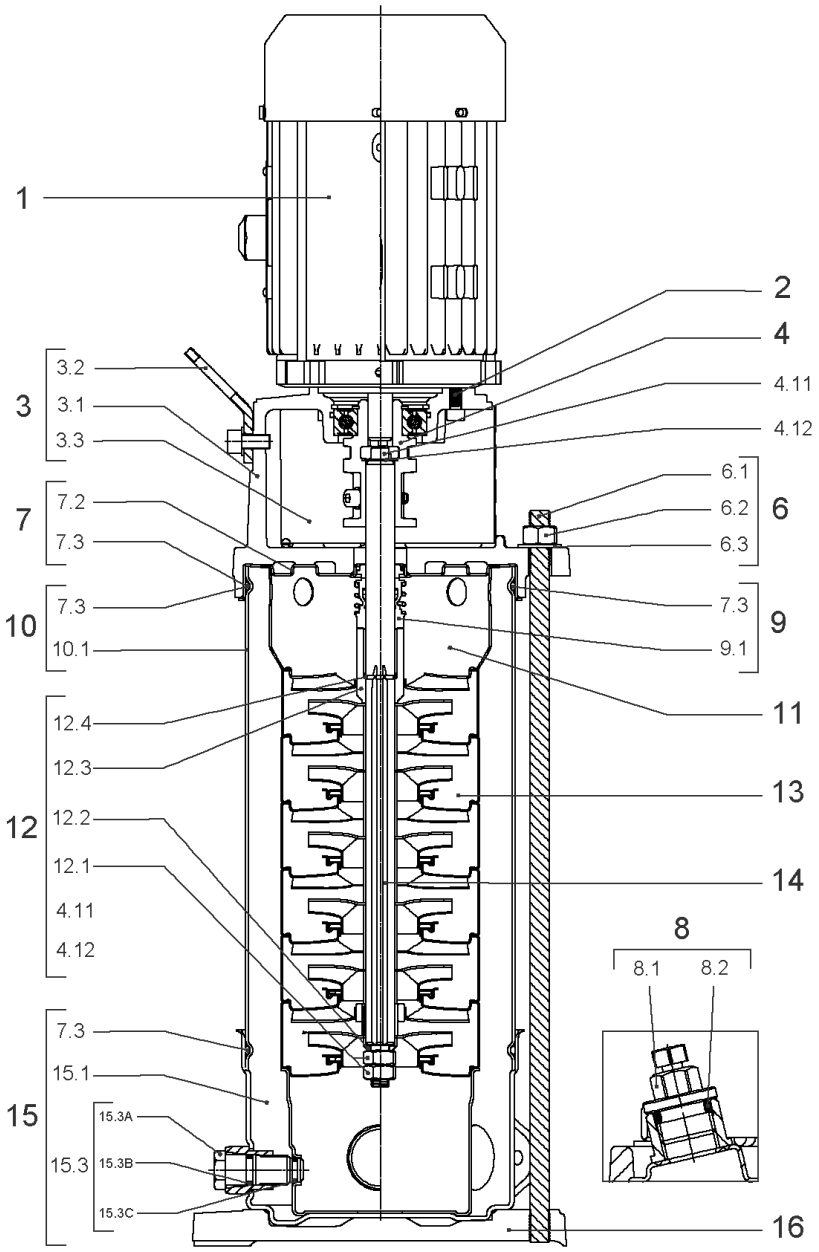
1
2
4
4.11
4.12
3
3.2
3.1
3.3
7
7.2
7.3
10
7.3
10.1
6
6.1
6.2
6.3
9
7.3
9.1
11
12
12.4
12.3
12.2
12.1
4.11
4.12
13
14
8
8.1
8.2
15
7.3
15.1
15.3
15.3A
15.3B
15.3C
16

## HELIX VE1002-1/16/E/S (4201547)

| Item | Article no. | Description | Quantity |
|---|---|---|---|
| 1 | | DRIVE HELIX-VE1002-IE4-WE KIT | 1 |
| Note: MOTOR BRAND WILO ELEC | | | |
| | | SPARE PARTS MOTOR:ON REQUEST | 1 |
| 2 | 4212716 | SCREW M6X20 KIT (4PIECES) | 1 |
| 3 | 4213752 | LANTERN FT100 HELIX KIT | 1 |
| 3.1 | | > LANT-MOT-VMI-ReDTC6"-FT100-MACHINED+CATA | 1 |
| 3.2 | 4184852 | > EYELET CPL.FT HELIX (2 PIECES) | 1 |
| 3.3 | 4213713 | > COUPLING PROTECTOR FT85/100 HELIX KIT | 1 |
| 4 | 4159708 | COUPLING D.16XD.19 FT100 HELIX KIT | 1 |
| 6 | 4177803 | STUD BOLT M12X263 KIT | 1 |
| 6.1 | | > TIE BOLT M12-263x18x30-1.4057 | 1 |
| 6.2 | 2094647 | > NUT M12 M12 ISO4032 VP. | 1 |
| 6.3 | 2123557 | > WASHER CS-12.4-24-1.6-NFE25 (4 PIECES) | 1 |
| 7 | 4214481 | STATIONARY RING HOLDER HELIX D27 ReDTC | 1 |
| 7.2 | 4214479 | > STATIONARY RING HOLDER HELIX D27 VP. | 1 |
| 7.3 | 4176513 | > O-RING FOR PUMP JACKET VP. | 1 |
| 8 | 4212724 | FILING/PURGING PLUG HELIX ReDTC KIT | 1 |
| 8.1 | | > FILLING PLUG MVI6"-304 | 1 |
| 8.2 | 4177800 | > O-RING EPDM PLUG HELIX VP. | 1 |
| 9 | 4214483 | MECH.SEAL HELIX6-10-16 O/E ReDTC KIT | 1 |
| 9.1 | 4177801 | > MECH.SEAL HELIX6-10-16 O/E VP. | 1 |
| 7.3 | 4176513 | > O-RING FOR PUMP JACKET VP. | 1 |
| 10 | 4177804 | HOUSING PIPES D.152X134 1.4301 KIT | 1 |
| 7.3 | 4176513 | > O-RING FOR PUMP JACKET VP. | 1 |
| 10.1 | | > HOUSING-PIPE Ø152-M+1001/02-304 | 1 |
| 11 | 4172791 | CENTERING STAGE-RETURN HELIX10 1.4301VP. | 1 |
| 12 | 4214517 | SHAFT EQUIPMENT HELIX V10 ReDTC KIT | 1 |
| 12.1 | | > NUT-H-M10-A4.70 | 1 |
| 12.2 | | > SERRATED LOCK WASHER M+10M3-316L | 1 |
| 12.3 | | > 1/2-SNAP-RING-6/10M3-316L | 1 |
| 12.4 | | > STOP-RUSH-1/2-D16xd2-M+316 | 1 |
| 4.11 | | > SCREW CHC-M6X14-8.8-ISO4762-GEOMET500A | 1 |
| 4.12 | | > WASHER D.24 L6U ZINK | 1 |
| 13 | | HYDRAULIC HELIX V 1002 1.4307 | 1 |

| Item | Article no. | Description | Quantity |
|---|---|---|---|
| 14 | 4214488 | SHAFT D.16X203 HELIX 1.4057 VP. | 1 |
| 15 | 4159682 | PUMP HOUSING HELIX DN50 PN16 1.4301 KIT | 1 |
| 7.3 | 4176513 | > O-RING FOR PUMP JACKET VP. | 1 |
| 15.1 | | > BLASTING PPE HOUSING V-PN16-DN50-304 | 1 |
| 15.2 | 4217893 | > COUNTER FLANGE-G1"1/2-PN16-GJL KIT | 1 |
| 15.3 | 4171321 | > PRIMING/DRAIN PLUG EPDM HELIX KIT | 1 |
| 16 | 4176517 | BASEPLATE V8/10 VP. | 1 |

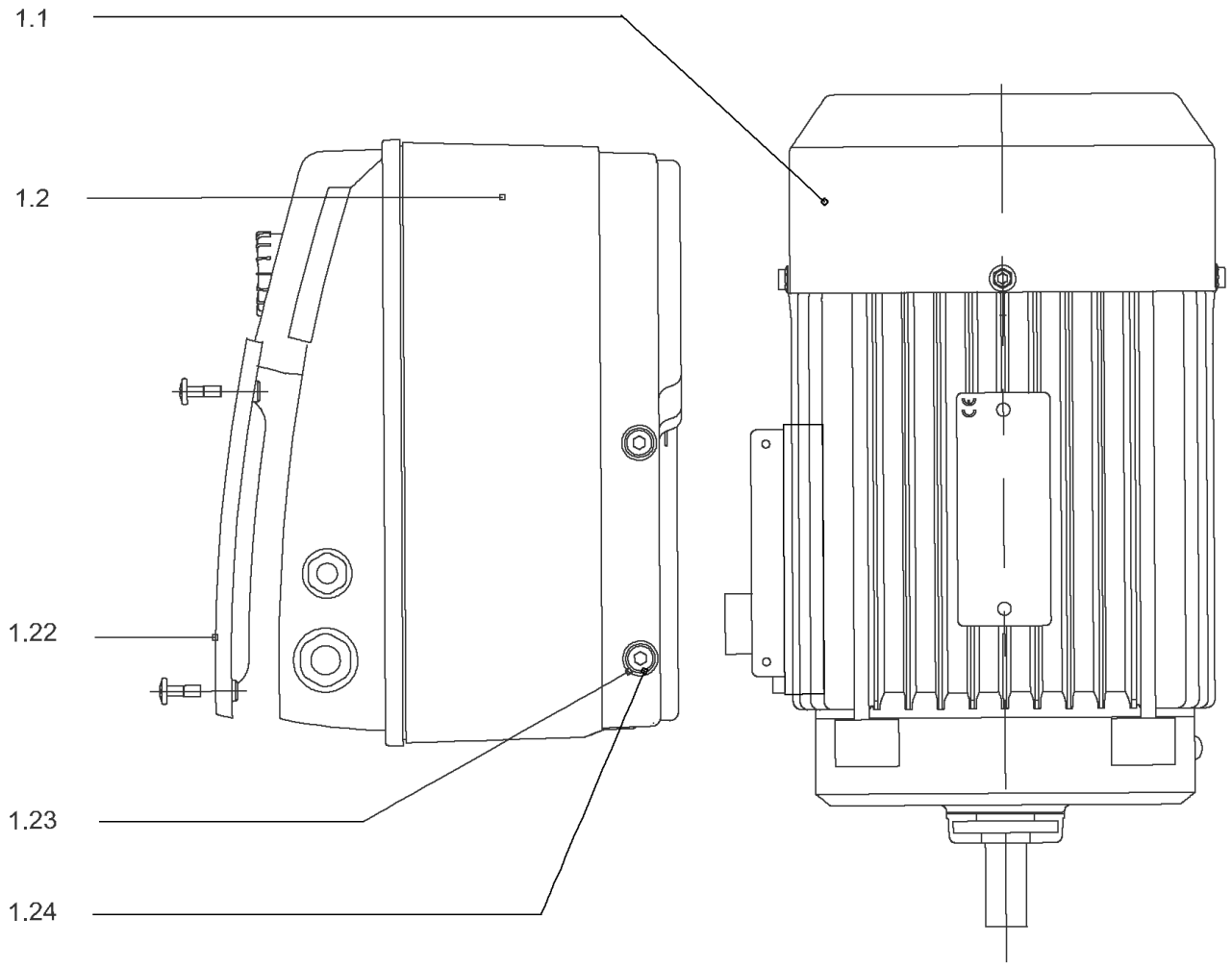
1.1
1.2
1.22
1.23
1.24

## DRIVE HELIX-VE1002-IE4-WE KIT

| Item | Article no. | Description | Quantity |
|---|---|---|---|
| 1.1 | 4207916 | MOTOR 1.1/2/80 3~ 380V 60HZ IE4 WE VP. | 1 |
| | | SPARE PARTS MOTOR:ON REQUEST | 1 |
| 1.2 | 4209600 | MODULE HELIX-VE1002-IE4-WE KIT | 1 |
| 1.22 | 2054372 | > MODULE COVER TL1,TL2+GASKET KIT | 1 |
| 1.23 | 4215716 | > SCREW M5X16 DIN912 8.8 A2A (4pieces) VP. | 1 |
| 1.24 | 2057978 | > RONDELLE A5,3 DIN6797 FST ZN (4 PIECES) | 1 |

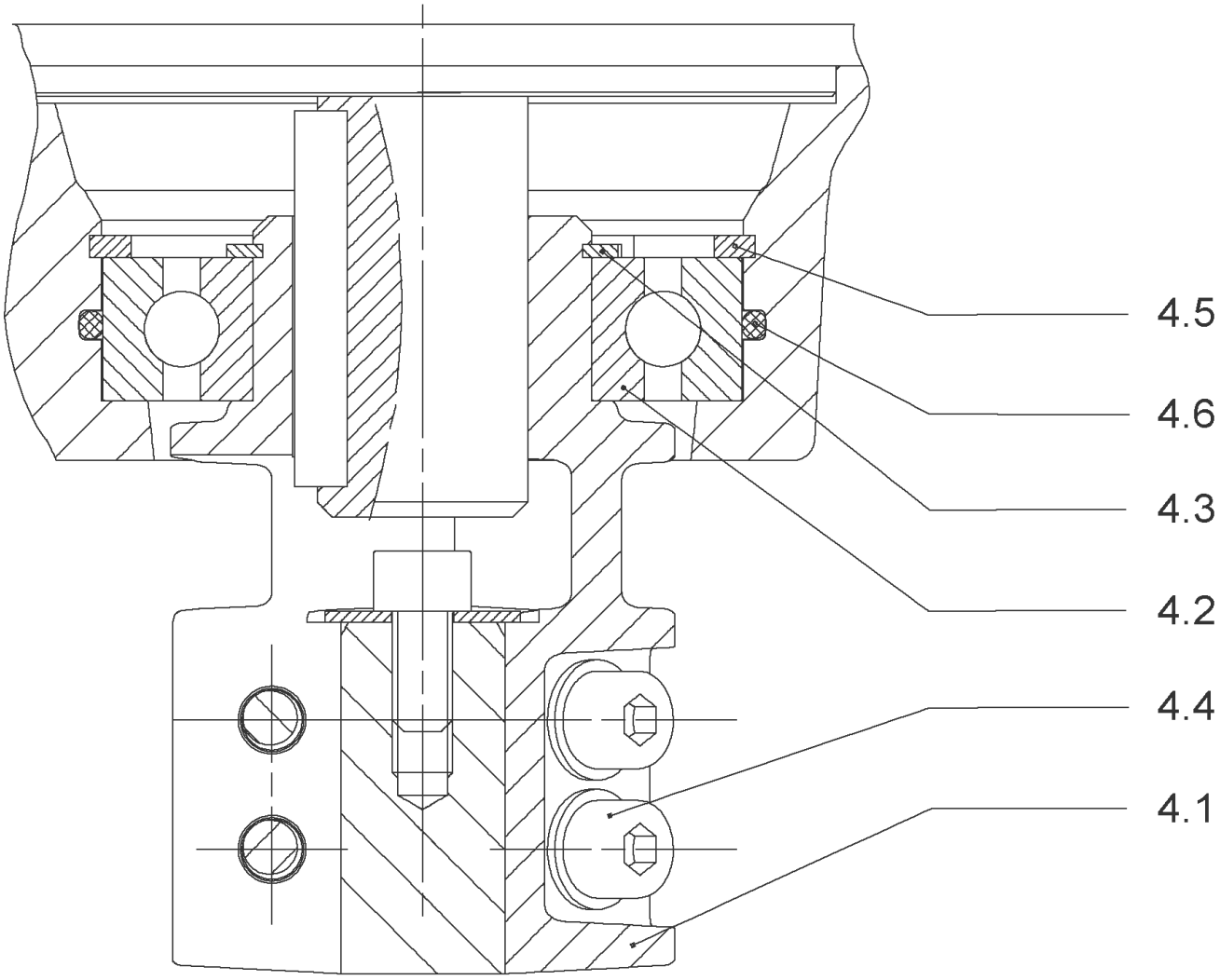
4.5
4.6
4.3
4.2
4.4
4.1

## COUPLING D.16XD.19 FT100 HELIX KIT (4159708)

| Item | Article no. | Description | Quantity |
|---|---|---|---|
| 4.1 | | COUPLING M+ Ø16XØ19 FT100 MACHINED | 1 |
| 4.2 | 2130977 | BALL BEARING 6206/ZZ-C3(HT)VP. | 1 |
| 4.3 | 4234249 | CIRCLIP-FOR-SHAFT-D30x1.5 VP. | 1 |
| 4.4 | 4212716 | SCREW M6X20 KIT (4PIECES) | 1 |
| 4.5 | 4234250 | CIRCLIP-D62x2 VP. | 1 |
| 4.6 | 4234245 | O-RING 63X3 VP. | 1 |
| | | CONTACT-WASHER-6ETR-6,1x12,2x1,8-STEEL | 1 |

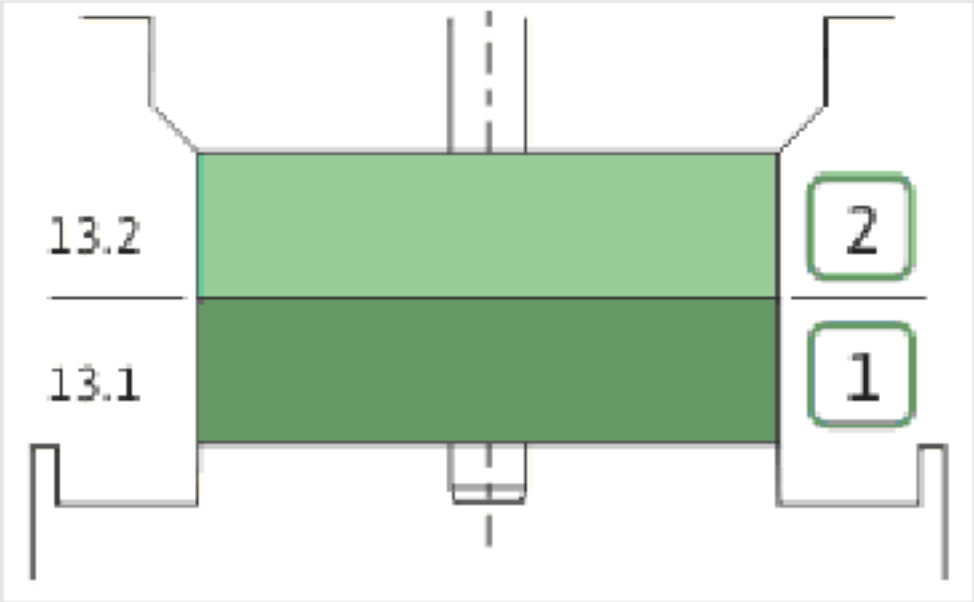
13.2
13.1
2
1

| Item | Article no. | Description | Quantity |
|---|---|---|---|
| 13.1 | 4171331 | STAGE HELIX10 1.4301KIT | 1 |
| | | > MACH.STG-CASING-WOGV-WNR-M+10-304 | 1 |
| | | > IMPELLER-M+10-304 | 1 |
| 13.2 | 4172792 | INTERMEDIATE STAGE HELIX 10 1.4301 KIT | 1 |
| | | > MACH.BEARING-STG-CASING-WNR-M+10-304 | 1 |
| | | > IMPELLER-M+10-304 | 1 |
| | | > SHAFT SLEEVE-SPACER-Ø19,35x18,465-304 | 1 |
| | | > SHAFT-SLEEVE-D16xD20x18-CW | 1 |

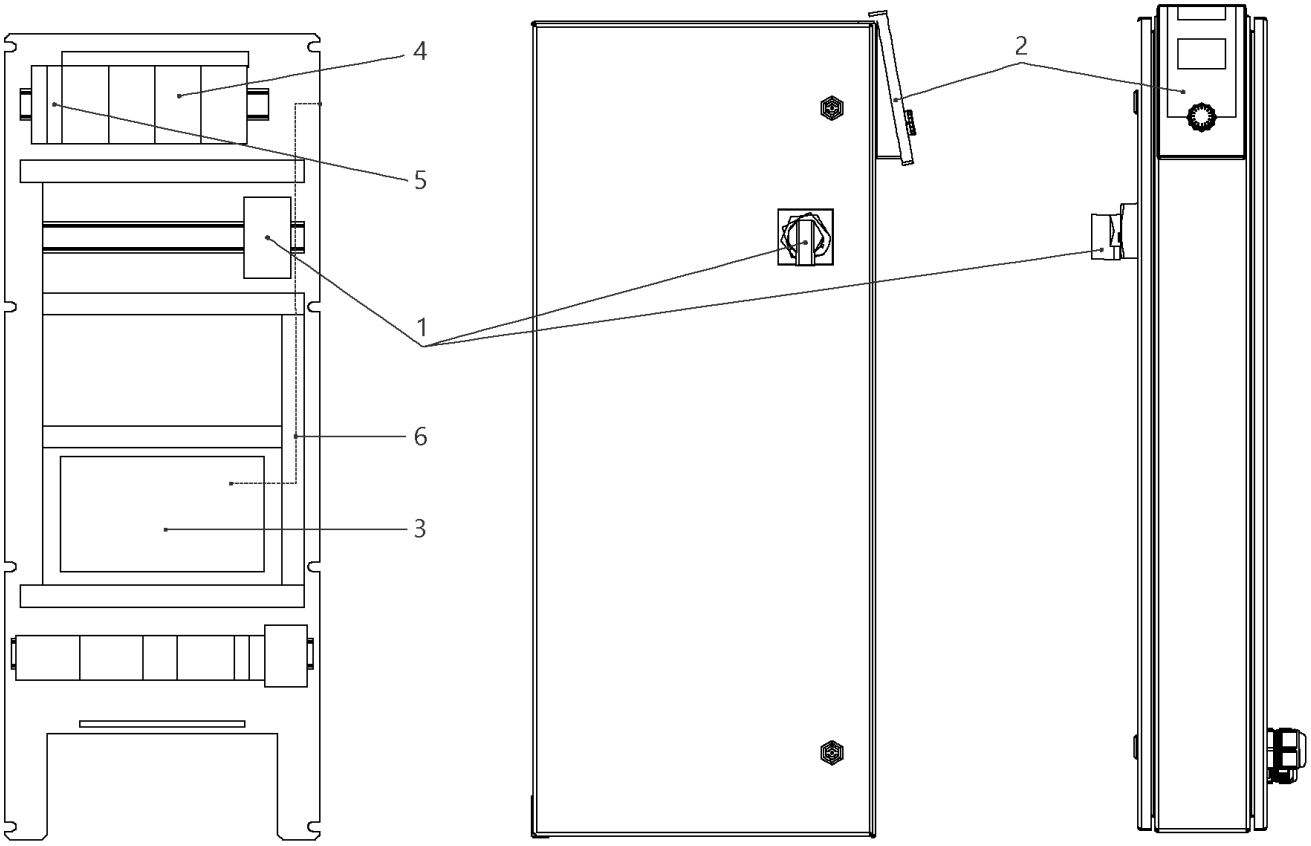
4
5
1
6
3
2

## W-CTRL-SCE-B-4x1,1KW-T4-FM-ND2

| Item | Article no. | Description | Quantity |
|---|---|---|---|
| 1 | 2104470 | MAIN SWITCH OT40F3 L250 KIT | 1 |
| 2 | 4184784 | CONTROL PANEL HMI SC KIT | 1 |
| 2 | 4185259 | ASSEMBLY DISPLAY SC PKG VP. | 1 |
| 3 | 4185257 | ASSEMBLY CPU SCe Booster VP. | 1 |
| 4 | 2051217 | AUTOM.CIRCUIT BREAKER S203 B16 TO7,5kW | 1 |
| 5 | 2046288 | CIRCUIT BREAKER S201 B16 | 1 |
| 6 | 4194956 | PATCH CABLE RJ45 CAT6 1,0M BLUE SC-PANEL | 1 |

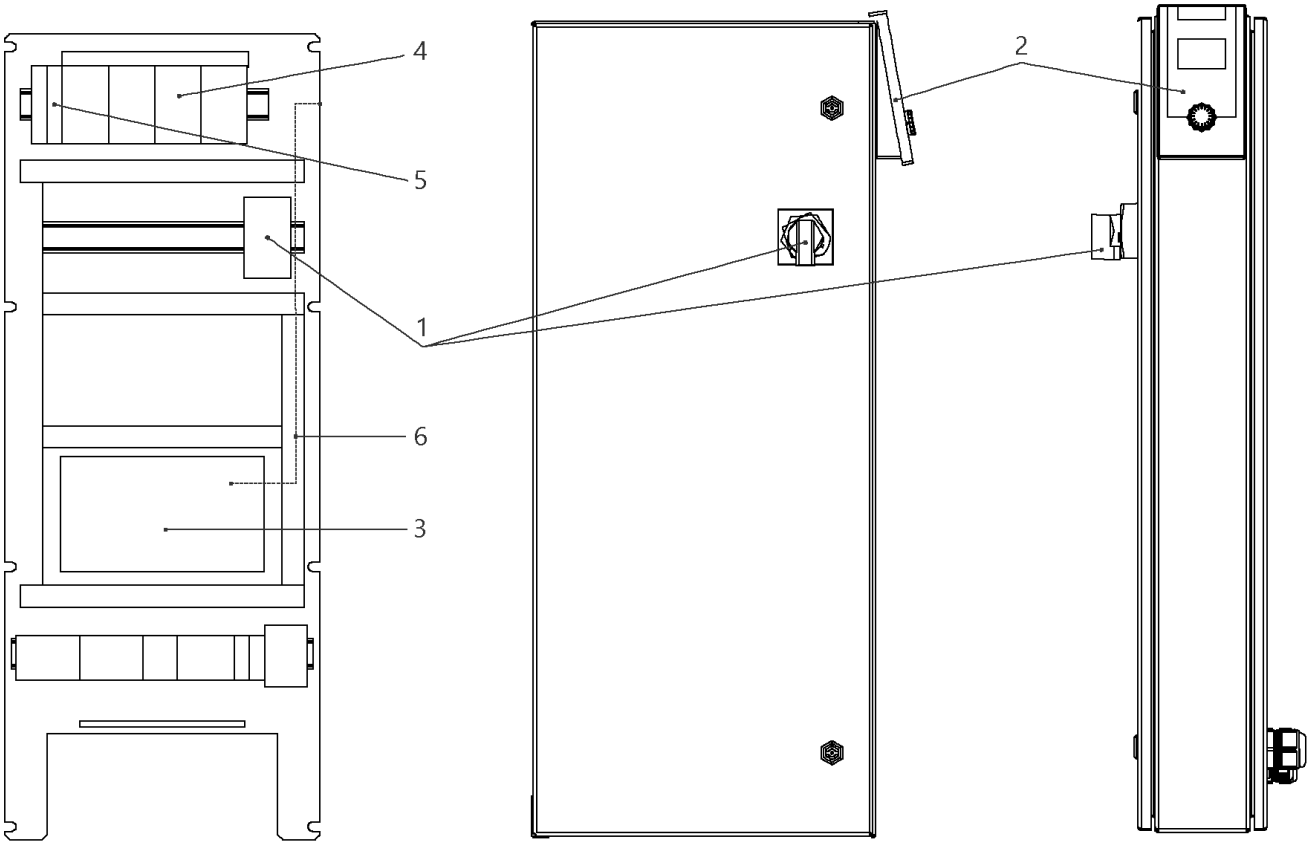
4
5
1
6
3
2

## W-CTRL-SCE-B-4x0,55-1,5KW-T4-FM-ND1

| Item | Article no. | Description | Quantity |
|---|---|---|---|
| 1 | 2104470 | MAIN SWITCH OT40F3 L250 KIT | 1 |
| 2 | 4184784 | CONTROL PANEL HMI SC KIT | 1 |
| 2 | 4185259 | ASSEMBLY DISPLAY SC PKG VP. | 1 |
| 3 | 4185257 | ASSEMBLY CPU SCe Booster VP. | 1 |
| 4 | 2051217 | AUTOM.CIRCUIT BREAKER S203 B16 TO7,5kW | 1 |
| 5 | 2046288 | CIRCUIT BREAKER S201 B16 | 1 |
| 6 | 4197081 | CABLE RJ45 CAT6 0,5M RED SC-PANEL VP. | 1 |

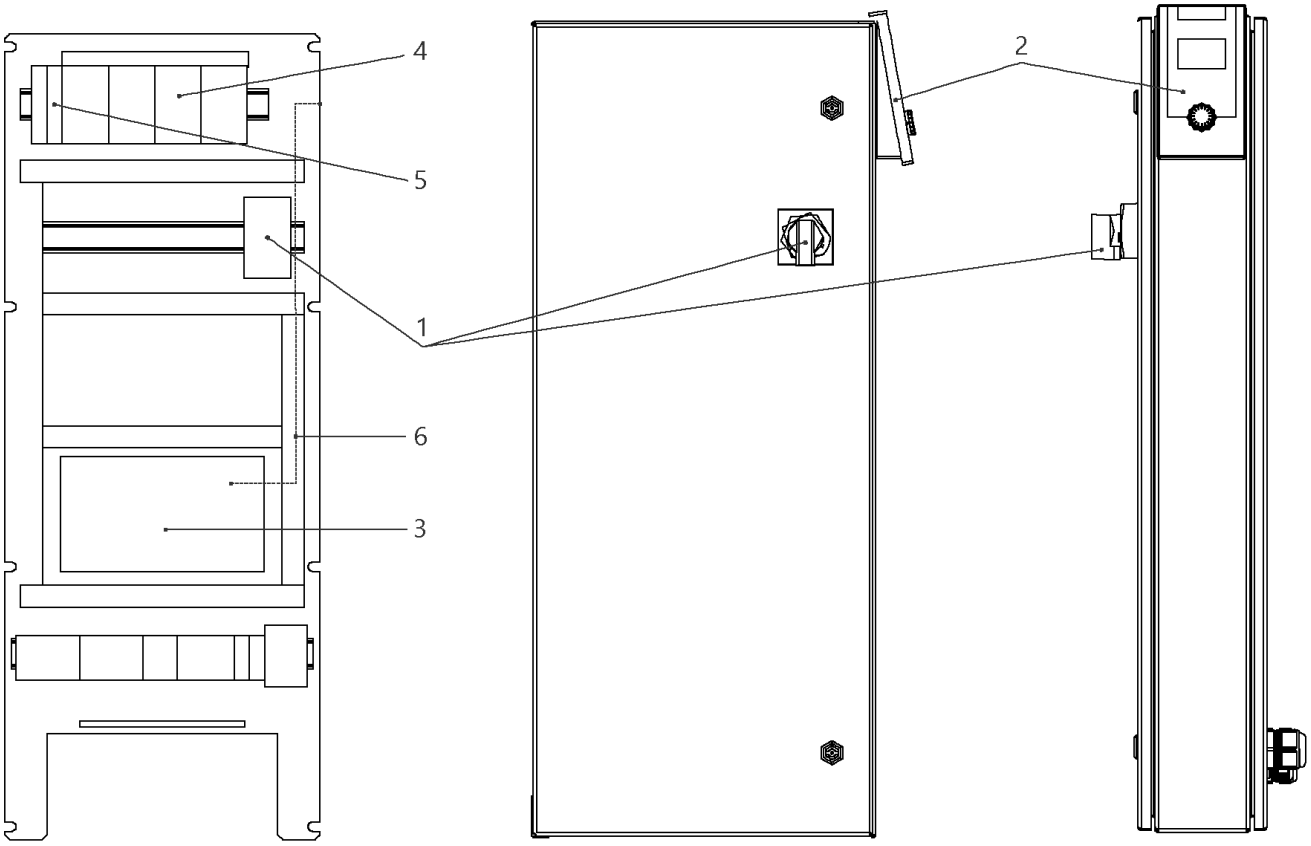
4
5
1
6
3
2

## W-CTRL-SCE-B-4x10A-T34-FM-ND1-AVC-PKG (2541915)

| Item | Article no. | Description | Quantity |
|---|---|---|---|
| 1 | 2104473 | MAIN SWITCH OT63F3 L105 KIT | 1 |
| 2 | 4184784 | CONTROL PANEL HMI SC KIT | 1 |
| 2 | 4185259 | ASSEMBLY DISPLAY SC PKG VP. | 1 |
| Note: DISPLAY ALONE / PLATINE SEULE | | | |
| 3 | 4185257 | ASSEMBLY CPU SCe Booster VP. | 1 |
| 5 | 2046288 | CIRCUIT BREAKER S201 B16 | 1 |
| 4 | 2119861 | AUTOMATIC CIRCUIT BREAKER S203 B13 3POL. | 1 |
| 6 | 4197081 | CABLE RJ45 CAT6 0,5M RED SC-PANEL VP. | 1 |

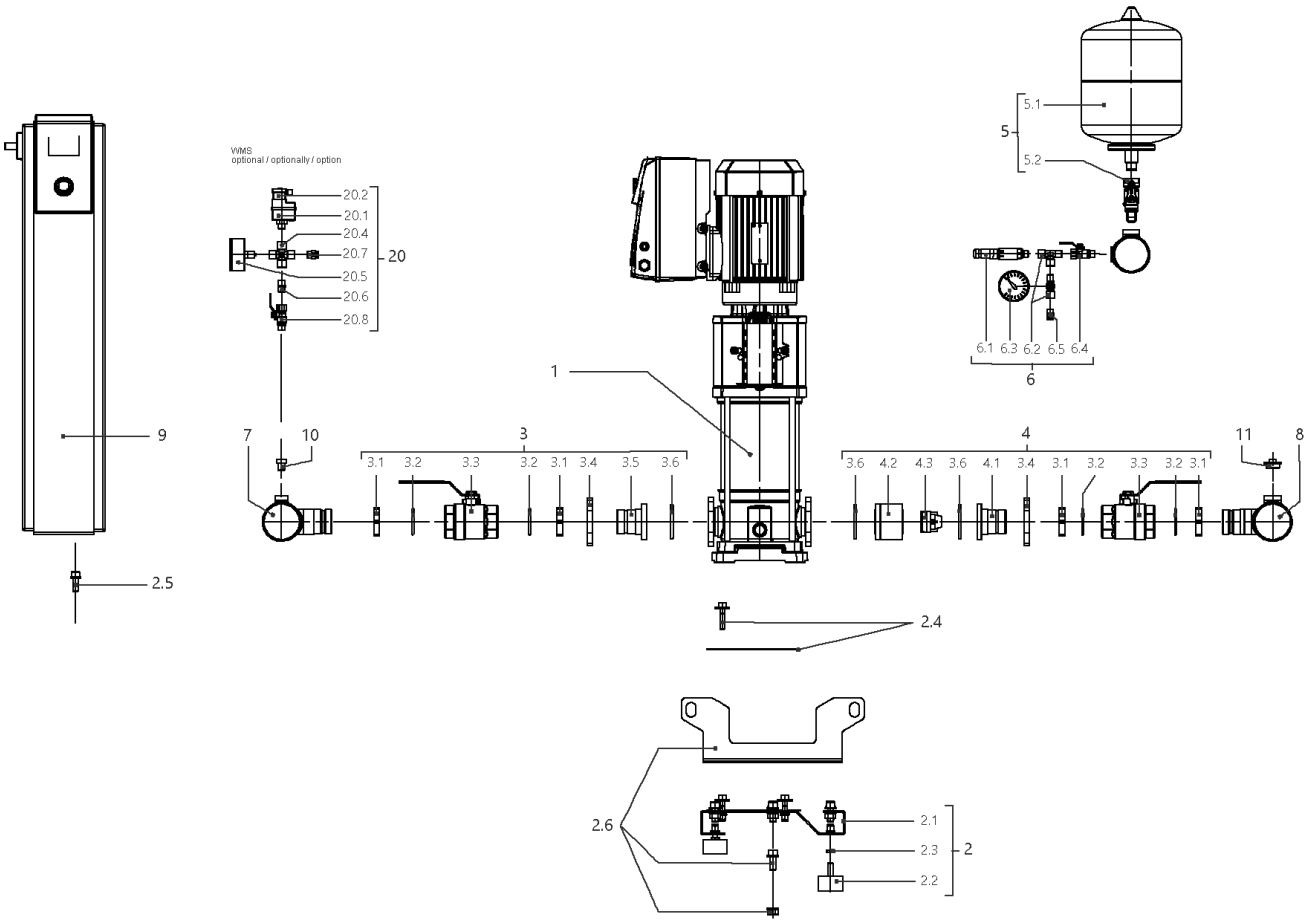
VVMS
optional / optionally / option
20.2
20.1
20.4
20.7
20.5
20.6
20.8
20
5.1
5
5.2
6.1 6.3 6.2 6.5 6.4
6
1
9
7
10
3
3.1 3.2 3.3 3.2 3.1 3.4 3.5 3.6
4
3.6 4.2 4.3 3.6 4.1 3.4 3.1 3.2 3.3 3.2 3.1
11
8
2.5
2.4
2.6
2.1
2.3
2.2
2

## SiBoost Smart 4HELIX VE1003 (2537351)

| Item | Article no. | Description | Quantity |
|---|---|---|---|
| 1 | | HELIX VE1003-1/16/E/S | 1 |
| Note: TO / BIS / JUSQU'AU 31/03/2016 | | | |
| 1 | 4201549 | HELIX VE1003-1/16/E/S | 1 |
| Note: FROM / AB / À PARTIR DU 01/04/2016 | | | |
| 2 | 4200143 | BASE PLATE DE4 1450x300 KIT | 1 |
| Note: TO / BIS / JUSQU'AU 06/02/2014 | | | |
| 2.1 | | > BASEPLATE_4x4/6/10V_E300_1450x300BOX_150 | 1 |
| 2.2 | 2028654 | > VIBRATION DAMPER D.50X30 M10X28 | 1 |
| 2.3 | 2028281 | > NUT M10 DIN936 (ISO4035) 17H VZ | 1 |
| 2.4 | 4199875 | > HOLDER PUMP Siboost Helix V2/4 KIT | 1 |
| 2.5 | 4197084 | > HOLDER SWITCHBOX WILO Smart Control KIT | 1 |
| 2.6 | 4197085 | > LIFTING Siboost HELIX SC KIT | 1 |
| 2 | 4197128 | BASE PLATE DE4 1450x300 KIT | 1 |
| Note: FROM / AB / À PARTIR DU 07/02/2014 | | | |
| 2.1 | | > BASEPLATE_4x4/6/10V_E300_1450x300BOX_150 | 1 |
| 2.2 | 2028654 | > VIBRATION DAMPER D.50X30 M10X28 | 1 |
| 2.3 | 2028281 | > NUT M10 DIN936 (ISO4035) 17H VZ | 1 |
| 2.4 | 4197083 | > HOLDER PUMP Helix 10/16 KIT | 1 |
| 2.5 | 4197084 | > HOLDER SWITCHBOX WILO Smart Control KIT | 1 |
| 2.6 | 4197085 | > LIFTING Siboost HELIX SC KIT | 1 |
| 3 | 4197072 | SUCTION SIDE Siboost Helix10/16 KIT | 1 |
| 3.1 | 2032623 | > NUT G1 1/2"SW55 MS | 1 |
| 3.2 | 2032616 | > O-RING ID.44X3,53N DIN3771 E7502 | 1 |
| 3.2 | 2534877 | > BALL TAP KDW40-H G11/2I-I-DN40 DVGW | 1 |
| 3.4 | 2032626 | > OVAL FLANGE D52-LK100 ST-VZ | 1 |
| 3.5 | 2032627 | > UNION INSERT DN40 LAPPED FLANGE | 1 |
| 3.6 | 2032628 | > O-RING ID.56,52X5,33N DIN3771 E7502 | 1 |
| 4 | 4197074 | DELIVERY SIDE Siboost Helix V10 KIT | 1 |
| 3.1 | 2032623 | > NUT G1 1/2"SW55 MS | 1 |
| 3.2 | 2032616 | > O-RING ID.44X3,53N DIN3771 E7502 | 1 |
| 3.3 | 2534877 | > BALL TAP KDW40-H G11/2I-I-DN40 DVGW | 1 |
| 3.4 | 2032626 | > OVAL FLANGE D52-LK100 ST-VZ | 1 |
| 4.1 | 2054316 | > UNION INSERT DN40 LAPPED FLANGE(W.SLOT) | 1 |
| 4.2 | 2054317 | > HOUSING F.NON RETURN VALVE(RV-IN) DN40 | 1 |

| Item | Article no. | Description | Quantity |
|---|---|---|---|
| 4.3 | 2032631 | > NON-RETURN-DEVICE DN40 (MTR)TYP RV-IN | 1 |
| 3.6 | 2032628 | > O-RING ID.56,52X5,33N DIN3771 E7502 | 1 |
| 5 | 2032642 | DIAPHREM TANK 8L/PN16 DIN4807/T5 KIT | 1 |
| 5.1 | 2045914 | > DIAPHREM TANK 8L TYP-DD 16BAR | 1 |
| 5.2 | 2027853 | > FLOW FITTING G3/4 FOR DIAPHRAGM VES. | 1 |
| 6 | 4197076 | PRESSURE SENSOR/ GAUGE 0-16BAR KIT | 1 |
| 6.1 | 2085909 | > PRESS.SENSOR 1/4" 0-16BAR 4-20MA VP. | 1 |
| 6.2 | 4197077 | > T-PIECE 1/4" VP. | 1 |
| 6.3 | 2028692 | > PRESSURE GAUGE NG63-PN16-G1/4 | 1 |
| 6.4 | 2028291 | > BALL TAP R1/4" PN42 GIACOMINI R254DL | 1 |
| 6.5 | 2028691 | > BLOWGUN 1/4" MS 30BAR VP. | 1 |
| 7 | 4197129 | PIPE DE4 R3''-4x11/2"+2x1/4x1200 VP. | 1 |
| 8 | 4197130 | PIPE DE4 R3''-4x11/2"+2x1/4+1x3/4x1200 | 1 |
| 9 | | W-CTRL-SCE-B-4x0,55-1,5KW-T4-FM-ND1 | 1 |
| Note: TO / BIS / JUSQU'AU 18/05/2014 | | | |
| 9 | 2541915 | W-CTRL-SCE-B-4x10A-T34-FM-ND1-AVC-PKG | 1 |
| Note: FROM / AB / À PARTIR DU 19/05/2014 | | | |
| 10 | 4197079 | PLUG G1/4"x10 AISI304 KIT | 1 |
| 11 | 2032654 | PLUG R3/4" MS VIEGA 1751 | 1 |
| 20 | | ASSEMBLY WMS. DE-EB. +VP | 1 |
| 20.1 | 2028652 | > PRESSURE SWITCH PS3-ASR 1/(1,3) VP. | 1 |
| 20.2 | 2130983 | > PLUG PS3-415 WITH KABEL 1,5M 2NO VP. | 1 |
| 20.4 | 2028290 | > CROSSPIECE R1/4" MS-NICKEL | 1 |
| 20.5 | 2028687 | > PRESSURE GAUGE NG63 R1/4" HI.0-6BAR | 1 |
| 20.6 | 2054268 | > DUAL NIPPLE G1/4" x G1/4" MS VP. | 1 |
| 20.7 | 2028691 | > BLOWGUN 1/4" MS 30BAR VP. | 1 |
| 20.8 | 2028291 | > BALL TAP R1/4" PN42 GIACOMINI R254DL | 1 |

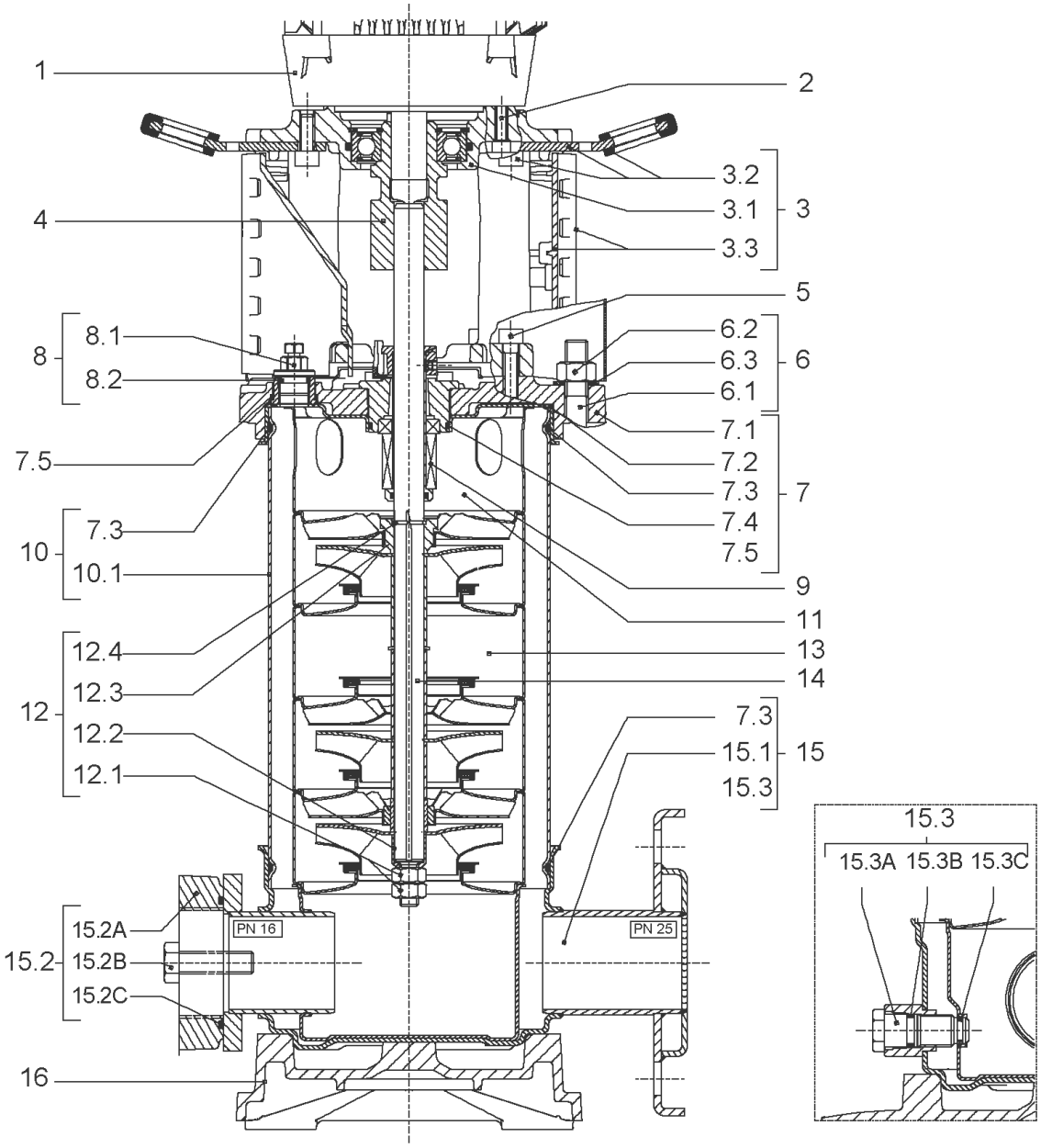
1
2
3.2
3.1
3
3.3
4
5
8.1
8
8.2
6.2
6.3
6
6.1
7.1
7.2
7.5
7.3
7
7.4
7.3
10
7.5
10.1
9
11
12.4
13
12.3
14
12
12.2
7.3
15.1
15
12.1
15.3
15.3
15.3A 15.3B 15.3C
15.2A
PN 16
PN 25
15.2
15.2B
15.2C
16

| Item | Article no. | Description | Quantity |
|---|---|---|---|
| 1 | | DRIVE HELIX-VE1003IE2-WE KIT | 1 |
| Note: MOTOR BRAND WILO ELEC | | | |
| 1 | | DRIVE HELIX-VE1003-IE4-WE-KIT | 1 |
| Note: MOTOR BRAND WILO ELEC | | | |
| 2 | 4159703 | SCREW M8X40 (4 PIECES) | 1 |
| 3 | 4172795 | LANTERNE FT115 HELIX KIT | 1 |
| 3.1 | | > M+5_6_LANTERN_ONE-PIECE_FT115_CATA | 1 |
| 3.2 | 2127604 | > EYELET CPL.FT HELIX(2 PIECES) | 1 |
| 3.3 | 4159692 | > COUPLING PROTECTOR FT HELIX KIT | 1 |
| 4 | 4159709 | COUPLING D.16xD.24 FT115 HELIX KIT | 1 |
| 5 | 4159707 | SCREW M8X30 (4 PIECES) | 1 |
| 6 | 4177812 | STUD BOLT M12X300KIT | 1 |
| 6.1 | | > TIE BOLT M12-300x18x30-1.4057 | 1 |
| 6.2 | 2094647 | > NUT M12 M12 ISO4032 VP. | 1 |
| 6.3 | 2123557 | > WASHER CS-12.4-24-1.6-NFE25 (4 PIECES) | 1 |
| 7 | 4210143 | STATIONARY RING HOLDER HELIX 6" EPDM | 1 |
| 7.2 | 2127607 | > STATIONARY RING HOLDER 6" HELIX 1.4301 V | 1 |
| 7.3 | 4176513 | > O-RING FOR PUMP JACKET VP. | 1 |
| 7.4 | 2127603 | > O-RING ID.37,6x2,4 EPDM VP. | 1 |
| 7.5 | 2127602 | > O-RING ID.21,35x2 EPDM VP. | 1 |
| 8 | 4159686 | FILING/PURGING PLUG HELIX EPDM KIT | 1 |
| 9 | 4171327 | SEAL-KIT-HELIX6-10-16 O/E KIT | 1 |
| 10 | 4177813 | HOUSING PIPE D.152x172 1.4301 KIT | 1 |
| 7.3 | 4176513 | > O-RING FOR PUMP JACKET VP. | 1 |
| 10.1 | | > HOUSING-PIPE Ø152-M+1003-304 | 1 |
| 11 | 4172791 | CENTERING STAGE-RETURN HELIX10 1.4301VP. | 1 |
| 12 | 4209273 | SHAFT EQUIPMENT HELIX V10 KIT | 1 |
| 12.1 | | > NUT-H-M10-A4.70 | 1 |
| 12.2 | | > SERRATED LOCK WASHER M+10M3-316L | 1 |
| 12.3 | | > IMPELLER STOP RING L33,6-304 | 1 |
| 12.4 | | > STOP-RUSH-1/2-D16xd2-M+316 | 1 |
| 13 | | HYDRAULIC HELIX V 1003 1.4307 | 1 |
| 14 | 4177815 | SHAFT D.16X292,5 1.4301 VP. | 1 |
| 15 | 4159682 | PUMP HOUSING HELIX DN50 PN16 1.4301 KIT | 1 |

| Item | Article no. | Description | Quantity |
|---|---|---|---|
| 7.3 | 4176513 | > O-RING FOR PUMP JACKET VP. | 1 |
| 15.1 | | > BLASTING PPE HOUSING V-PN16-DN50-304 | 1 |
| 15.2 | 4217893 | > COUNTER FLANGE-G1"1/2-PN16-GJL KIT | 1 |
| 15.3 | 4171321 | > PRIMING/DRAIN PLUG EPDM HELIX KIT | 1 |
| 16 | 4176517 | BASEPLATE V8/10 VP. | 1 |

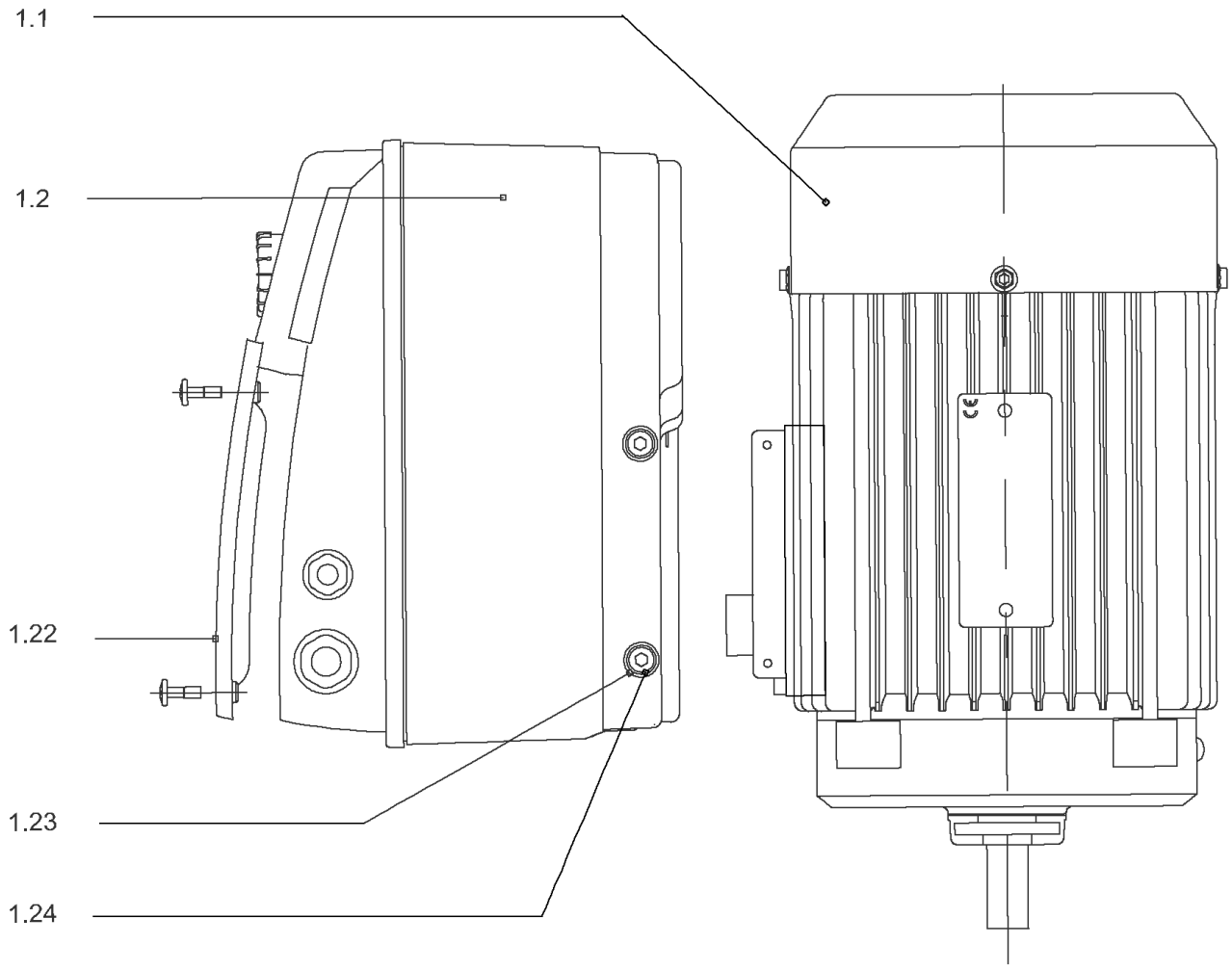
1.1
1.2
1.22
1.23
1.24

## DRIVE HELIX-VE1003IE2-WE KIT

| Item | Article no. | Description | Quantity |
|---|---|---|---|
| 1.1 | | MOTOR 1,5/2/90 3~ 380V 60HZ IE2 WE VP. | 1 |
| Note: no longer available/nicht mehrlieferbar/n'est plus disponible | | | |
| | | SPARE PARTS MOTOR:ON REQUEST | 1 |
| 1.2 | 4186336 | MODULE HELIX-VE1003-IE2-WE KIT | 1 |
| 1.22 | 2054227 | > MODULE COVER/GASKET TL3/4 KIT | 1 |
| 1.23 | 4215716 | > SCREW M5X16 DIN912 8.8 A2A (4pieces) VP. | 1 |
| 1.24 | 2057978 | > RONDELLE A5,3 DIN6797 FST ZN (4 PIECES) | 1 |

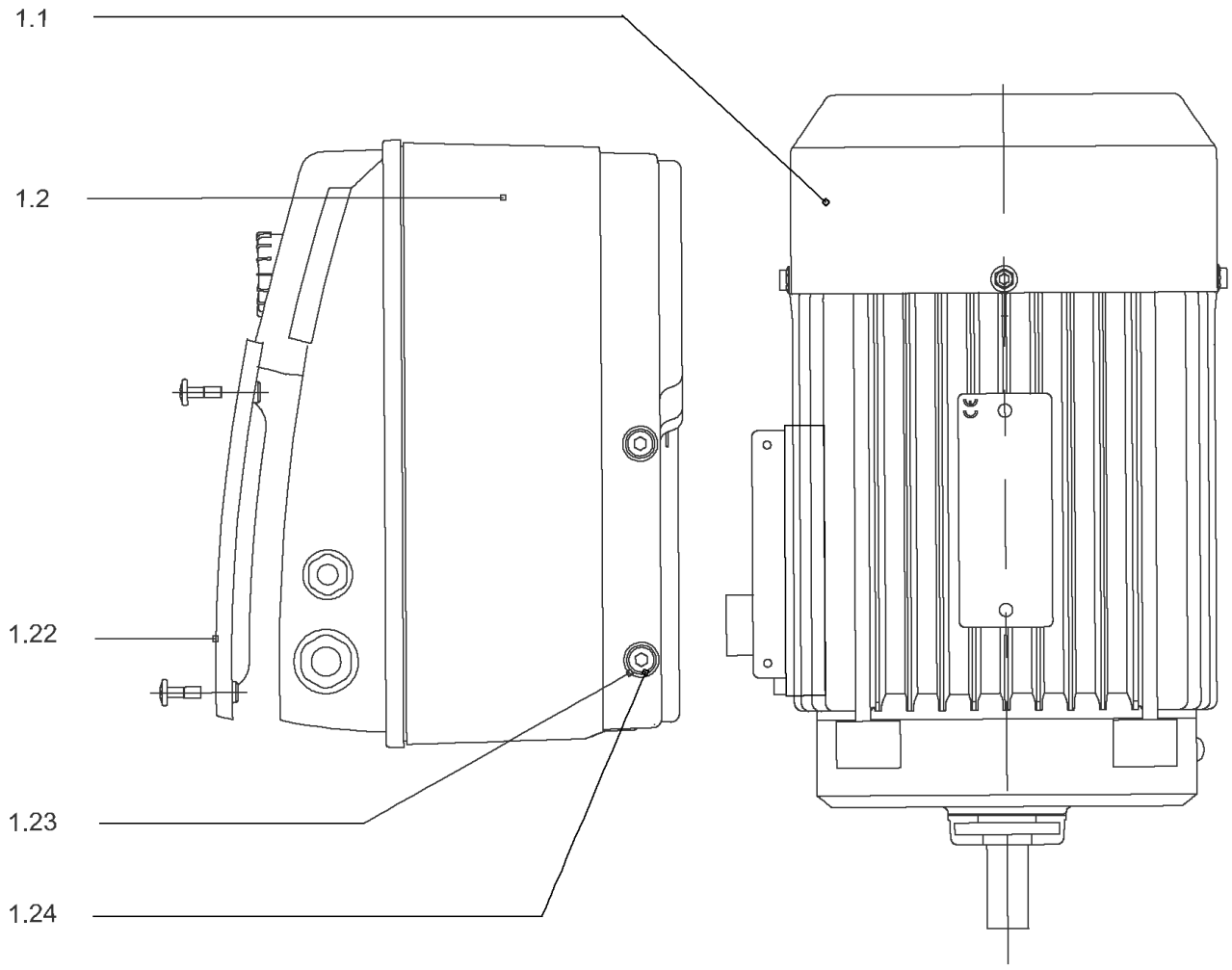
1.1
1.2
1.22
1.23
1.24

## DRIVE HELIX-VE1003-IE4-WE-KIT

| Item | Article no. | Description | Quantity |
|---|---|---|---|
| 1.1 | 4207918 | MOTOR 1.5/2/90 3~ 380V 60HZ IE4 WE VP. | 1 |
| | | SPARE PARTS MOTOR:ON REQUEST | 1 |
| 1.2 | 4209327 | MODULE HELIX-VE1003-IE4-WE KIT | 1 |
| 1.22 | 2054227 | > MODULE COVER/GASKET TL3/4 KIT | 1 |
| 1.23 | 4215716 | > SCREW M5X16 DIN912 8.8 A2A (4pieces) VP. | 1 |
| 1.24 | 2057978 | > RONDELLE A5,3 DIN6797 FST ZN (4 PIECES) | 1 |

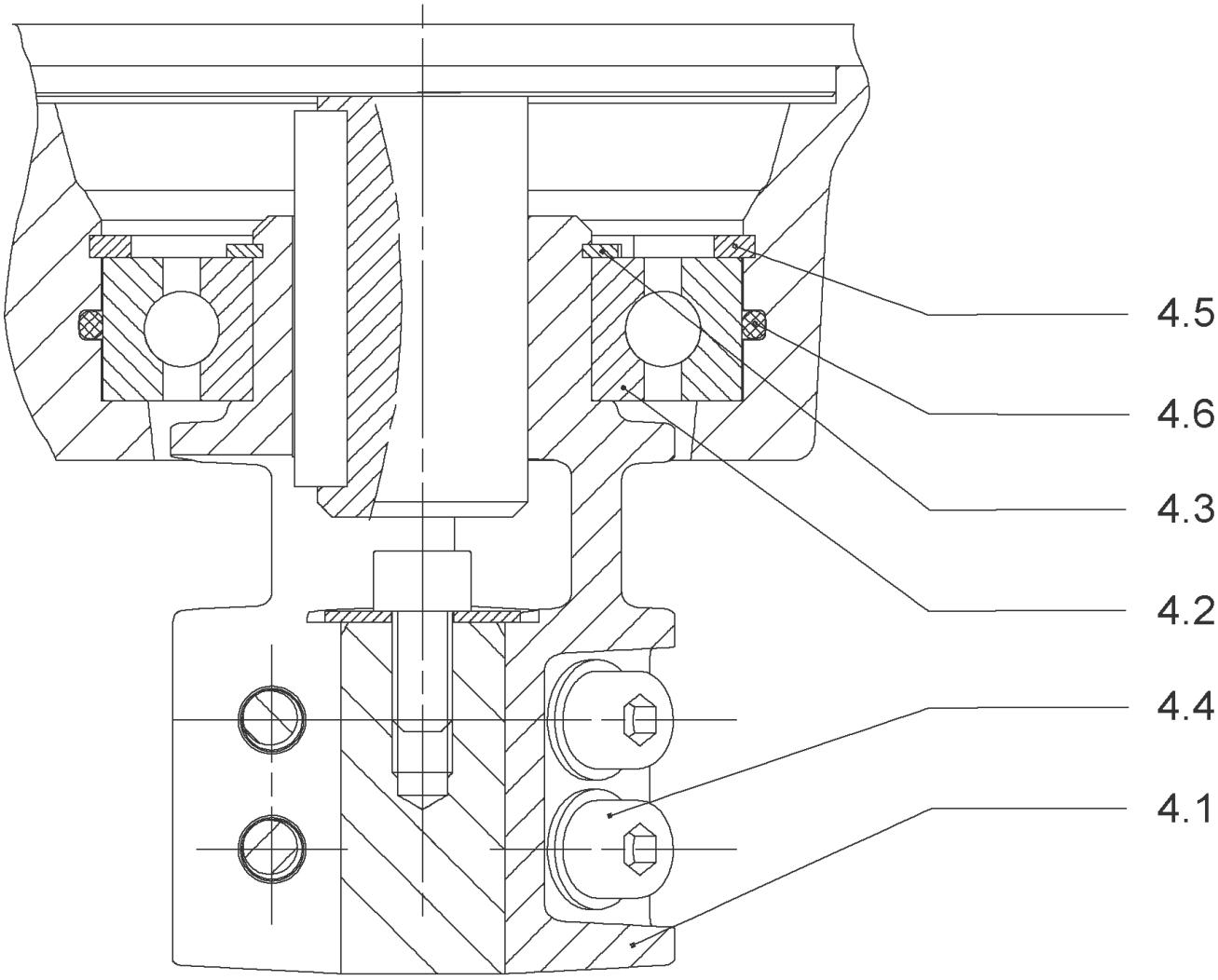
4.5
4.6
4.3
4.2
4.4
4.1

## COUPLING D.16xD.24 FT115 HELIX KIT (4159709)

| Item | Article no. | Description | Quantity |
|---|---|---|---|
| 4.1 | | COUPLING M+ Ø16XØ24 FT115 MACHINED | 1 |
| 4.2 | 2131023 | BALL BEARING 6207/ZZ-C3(HT)VP. | 1 |
| 4.3 | 4234254 | CIRCLIP-FOR-SHAFT-D35x1.5 VP. | 1 |
| 4.4 | 4157726 | SCREW KIT M8X30 (4 PIECES) | 1 |
| 4.5 | 4234251 | CIRCLIP-D72x2.5 VP. | 1 |
| 4.6 | 4234246 | O-RING 72X3 VP. | 1 |
| | | NOMEL CONTACT WASHER 8x16x1,4 STEEL ZC | 1 |

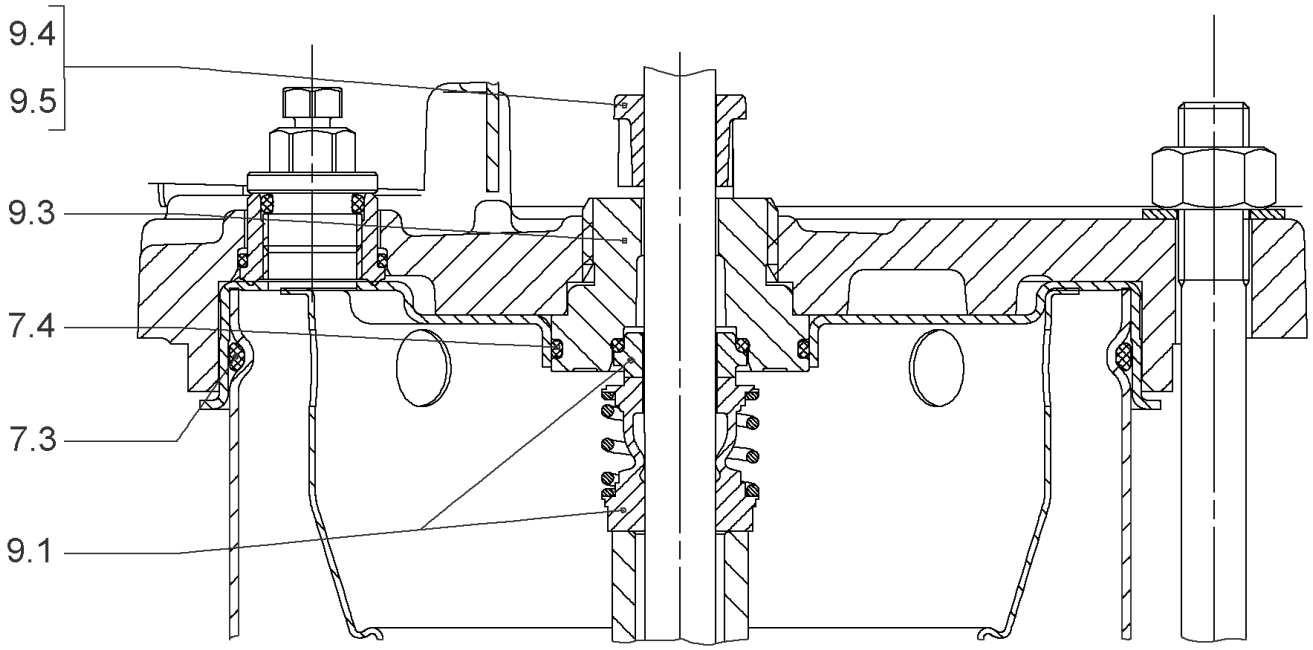
9.4
9.5
9.3
7.4
7.3
9.1

## SEAL-KIT-HELIX6-10-16 O/E KIT (4171327)

| Item | Article no. | Description | Quantity |
|---|---|---|---|
| 7.3 | 4176513 | O-RING FOR PUMP JACKET VP. | 1 |
| 7.4 | 2127603 | O-RING ID.37,6x2,4 EPDM VP. | 1 |
| 9.1 | 4177801 | MECH.SEAL HELIX6-10-16 O/E VP. | 1 |
| 9.3 | 4177798 | MACHINED RING HOLDER M+6" Ø16 304 VP. | 1 |
| 9.5 | 4177799 | MACHINED DRIVE RING Ø16 VP. | 1 |
| 9.4 | 4176520 | SCREW CH M5x5 A4-70 ( 3PIECES ) | 1 |

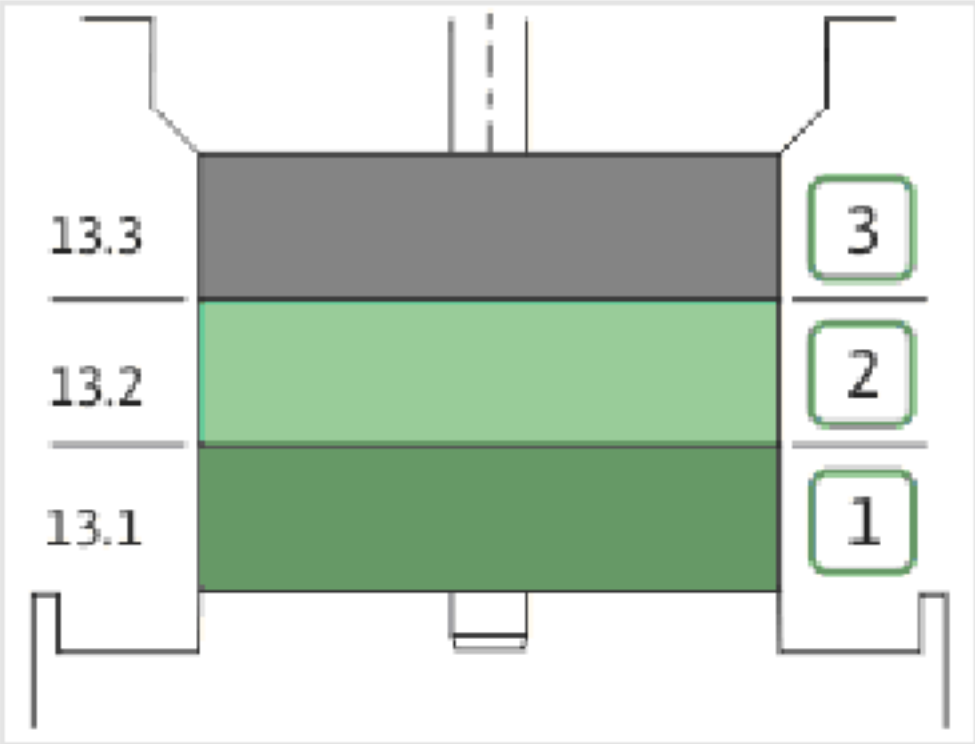
13.3
13.2
13.1
3
2
1

| Item | Article no. | Description | Quantity |
|---|---|---|---|
| 13.1 | 4171331 | STAGE HELIX10 1.4301KIT | 1 |
| | | > MACH.STG-CASING-WOGV-WNR-M+10-304 | 1 |
| | | > IMPELLER-M+10-304 | 1 |
| 13.2 | 4172792 | INTERMEDIATE STAGE HELIX 10 1.4301 KIT | 1 |
| | | > MACH.BEARING-STG-CASING-WNR-M+10-304 | 1 |
| | | > IMPELLER-M+10-304 | 1 |
| | | > SHAFT SLEEVE-SPACER-Ø19,35x18,465-304 | 1 |
| | | > SHAFT-SLEEVE-D16xD20x18-CW | 1 |
| 13.3 | 4172793 | INTERMEDIATE STAGE HELIX 10 1.4301 KIT | 1 |
| | | > MACH.STD-STG-CASING-WGV+NR-M+10-304 | 1 |
| | | > IMPELLER-M+10-304 | 1 |
| | | > IMPELLER SPACER Ø16,05X19,45-L36,465-304 | 1 |

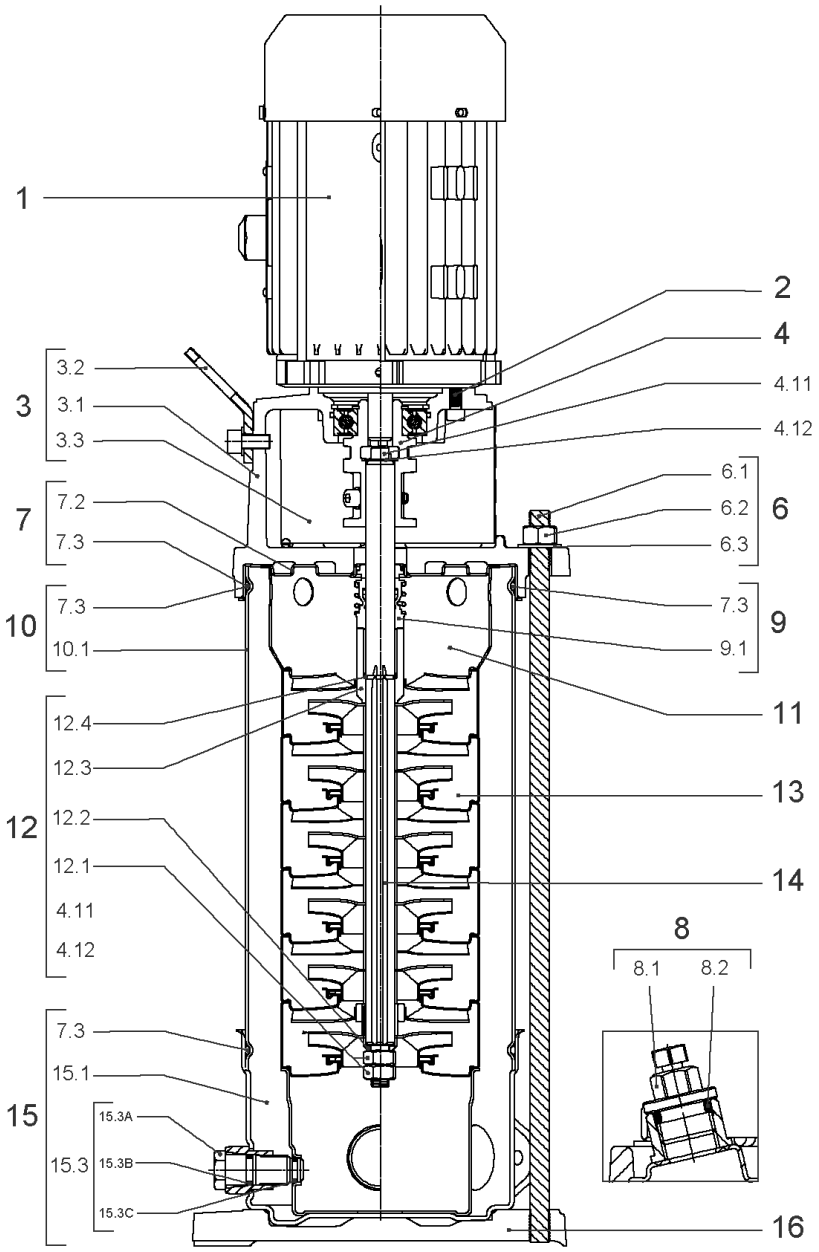
1
2
4
4.11
4.12
3
3.2
3.1
3.3
7
7.2
7.3
10
7.3
10.1
6
6.1
6.2
6.3
9
7.3
9.1
11
12
12.4
12.3
12.2
12.1
4.11
4.12
13
14
8
8.1
8.2
15
7.3
15.1
15.3
15.3A
15.3B
15.3C
16

## HELIX VE1003-1/16/E/S (4201549)

| Item | Article no. | Description | Quantity |
|---|---|---|---|
| 1 | | DRIVE HELIX-VE1003-IE4-WE-KIT | 1 |
| Note: MOTOR BRAND WILO ELEC | | | |
| | | SPARE PARTS MOTOR:ON REQUEST | 1 |
| 2 | 4159707 | SCREW M8X30 (4 PIECES) | 1 |
| 3 | 4213784 | LANTERN FT115 HELIX KIT | 1 |
| 3.1 | | > LANT-MOT-VMI-ReDTC6"-FT115-MACHINED+CATA | 1 |
| 3.2 | 4184852 | > EYELET CPL.FT HELIX (2 PIECES) | 1 |
| 3.3 | 4213782 | > COUPLING PROTECTOR FT115/130 HELIX KIT | 1 |
| 4 | 4159709 | COUPLING D.16xD.24 FT115 HELIX KIT | 1 |
| 6 | 4177812 | STUD BOLT M12X300KIT | 1 |
| 6.1 | | > TIE BOLT M12-300x18x30-1.4057 | 1 |
| 6.2 | 2094647 | > NUT M12 M12 ISO4032 VP. | 1 |
| 6.3 | 2123557 | > WASHER CS-12.4-24-1.6-NFE25 (4 PIECES) | 1 |
| 7 | 4214481 | STATIONARY RING HOLDER HELIX D27 ReDTC | 1 |
| 7.2 | 4214479 | > STATIONARY RING HOLDER HELIX D27 VP. | 1 |
| 7.3 | 4176513 | > O-RING FOR PUMP JACKET VP. | 1 |
| 8 | 4212724 | FILING/PURGING PLUG HELIX ReDTC KIT | 1 |
| 8.1 | | > FILLING PLUG MVI6"-304 | 1 |
| 8.2 | 4177800 | > O-RING EPDM PLUG HELIX VP. | 1 |
| 9 | 4214483 | MECH.SEAL HELIX6-10-16 O/E ReDTC KIT | 1 |
| 9.1 | 4177801 | > MECH.SEAL HELIX6-10-16 O/E VP. | 1 |
| 7.3 | 4176513 | > O-RING FOR PUMP JACKET VP. | 1 |
| 10 | 4177813 | HOUSING PIPE D.152x172 1.4301 KIT | 1 |
| 7.3 | 4176513 | > O-RING FOR PUMP JACKET VP. | 1 |
| 10.1 | | > HOUSING-PIPE Ø152-M+1003-304 | 1 |
| 11 | 4172791 | CENTERING STAGE-RETURN HELIX10 1.4301VP. | 1 |
| 12 | 4214517 | SHAFT EQUIPMENT HELIX V10 ReDTC KIT | 1 |
| 12.1 | | > NUT-H-M10-A4.70 | 1 |
| 12.2 | | > SERRATED LOCK WASHER M+10M3-316L | 1 |
| 12.3 | | > 1/2-SNAP-RING-6/10M3-316L | 1 |
| 12.4 | | > STOP-RUSH-1/2-D16xd2-M+316 | 1 |
| 4.11 | | > SCREW CHC-M6X14-8.8-ISO4762-GEOMET500A | 1 |
| 4.12 | | > WASHER D.24 L6U ZINK | 1 |
| 13 | | HYDRAULIC HELIX V 1003 1.4307 | 1 |

| Item | Article no. | Description | Quantity |
|---|---|---|---|
| 14 | 4214493 | SHAFT D.16X241 HELIX 1.4057 VP. | 1 |
| 15 | 4159682 | PUMP HOUSING HELIX DN50 PN16 1.4301 KIT | 1 |
| 7.3 | 4176513 | > O-RING FOR PUMP JACKET VP. | 1 |
| 15.1 | | > BLASTING PPE HOUSING V-PN16-DN50-304 | 1 |
| 15.2 | 4217893 | > COUNTER FLANGE-G1"1/2-PN16-GJL KIT | 1 |
| 15.3 | 4171321 | > PRIMING/DRAIN PLUG EPDM HELIX KIT | 1 |
| 16 | 4176517 | BASEPLATE V8/10 VP. | 1 |

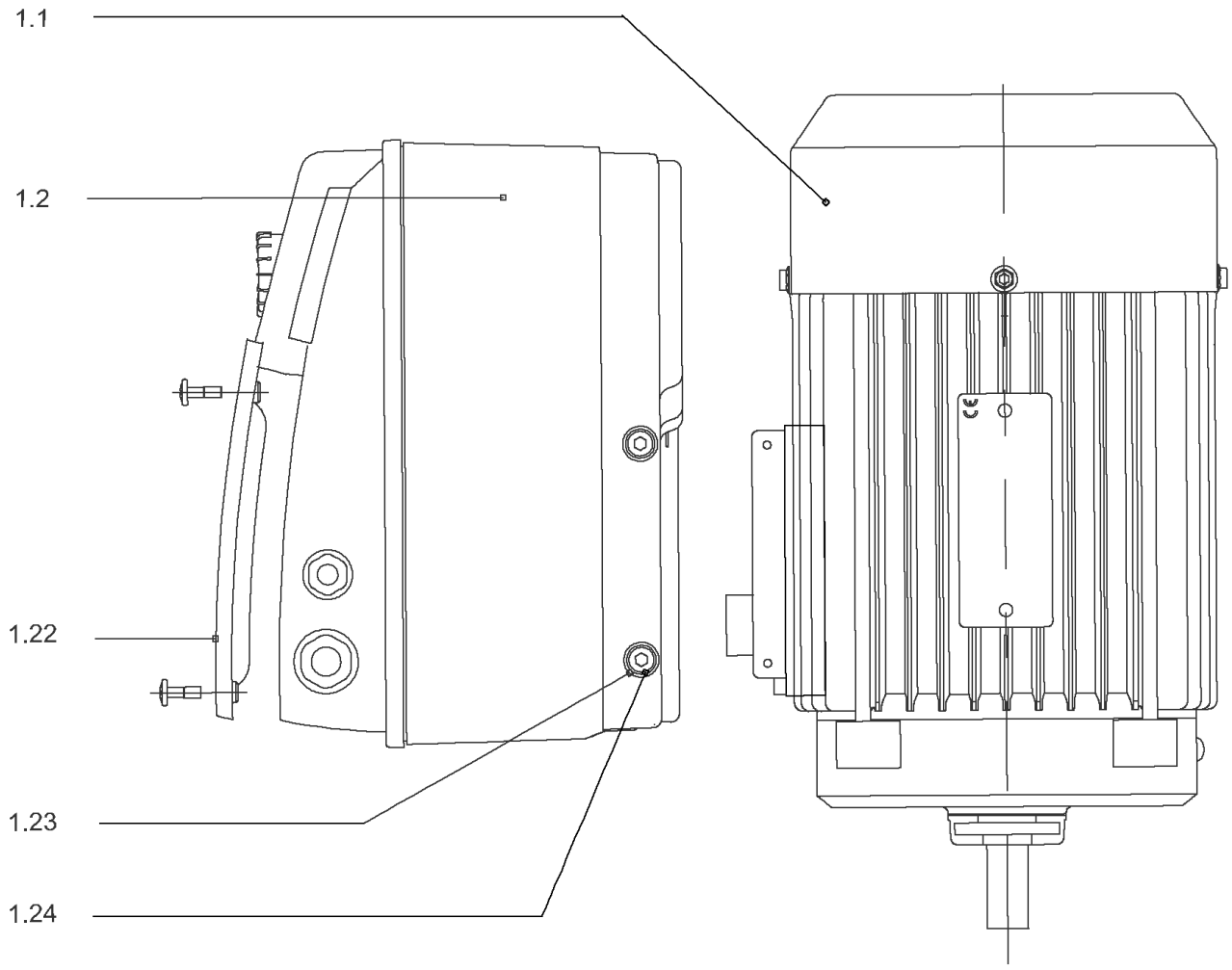
1.1
1.2
1.22
1.23
1.24

## DRIVE HELIX-VE1003-IE4-WE-KIT

| Item | Article no. | Description | Quantity |
|---|---|---|---|
| 1.1 | 4207918 | MOTOR 1.5/2/90 3~ 380V 60HZ IE4 WE VP. | 1 |
| | | SPARE PARTS MOTOR:ON REQUEST | 1 |
| 1.2 | 4209327 | MODULE HELIX-VE1003-IE4-WE KIT | 1 |
| 1.22 | 2054227 | > MODULE COVER/GASKET TL3/4 KIT | 1 |
| 1.23 | 4215716 | > SCREW M5X16 DIN912 8.8 A2A (4pieces) VP. | 1 |
| 1.24 | 2057978 | > RONDELLE A5,3 DIN6797 FST ZN (4 PIECES) | 1 |

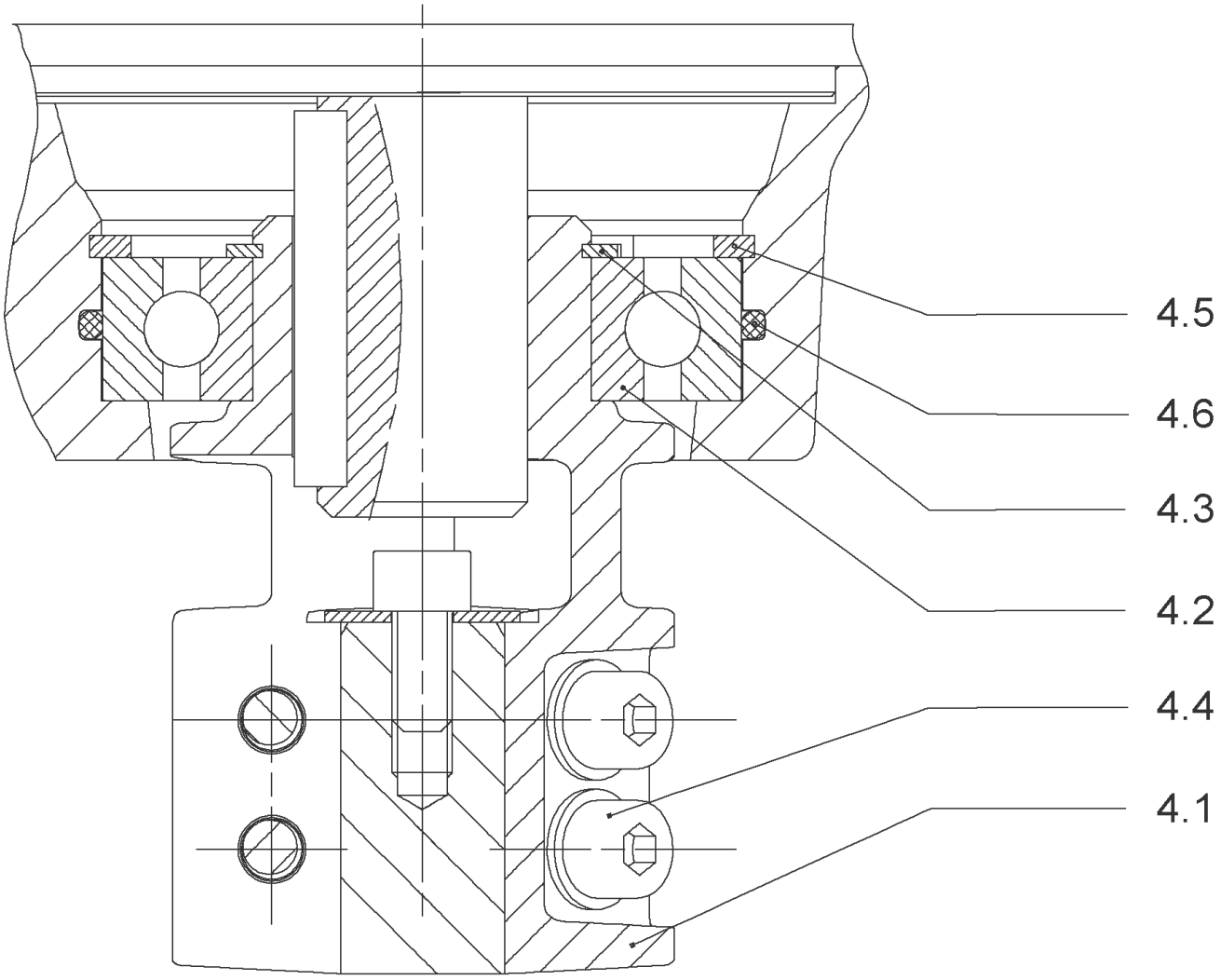
4.5
4.6
4.3
4.2
4.4
4.1

## COUPLING D.16xD.24 FT115 HELIX KIT (4159709)

| Item | Article no. | Description | Quantity |
|---|---|---|---|
| 4.1 | | COUPLING M+ Ø16XØ24 FT115 MACHINED | 1 |
| 4.2 | 2131023 | BALL BEARING 6207/ZZ-C3(HT)VP. | 1 |
| 4.3 | 4234254 | CIRCLIP-FOR-SHAFT-D35x1.5 VP. | 1 |
| 4.4 | 4157726 | SCREW KIT M8X30 (4 PIECES) | 1 |
| 4.5 | 4234251 | CIRCLIP-D72x2.5 VP. | 1 |
| 4.6 | 4234246 | O-RING 72X3 VP. | 1 |
| | | NOMEL CONTACT WASHER 8x16x1,4 STEEL ZC | 1 |

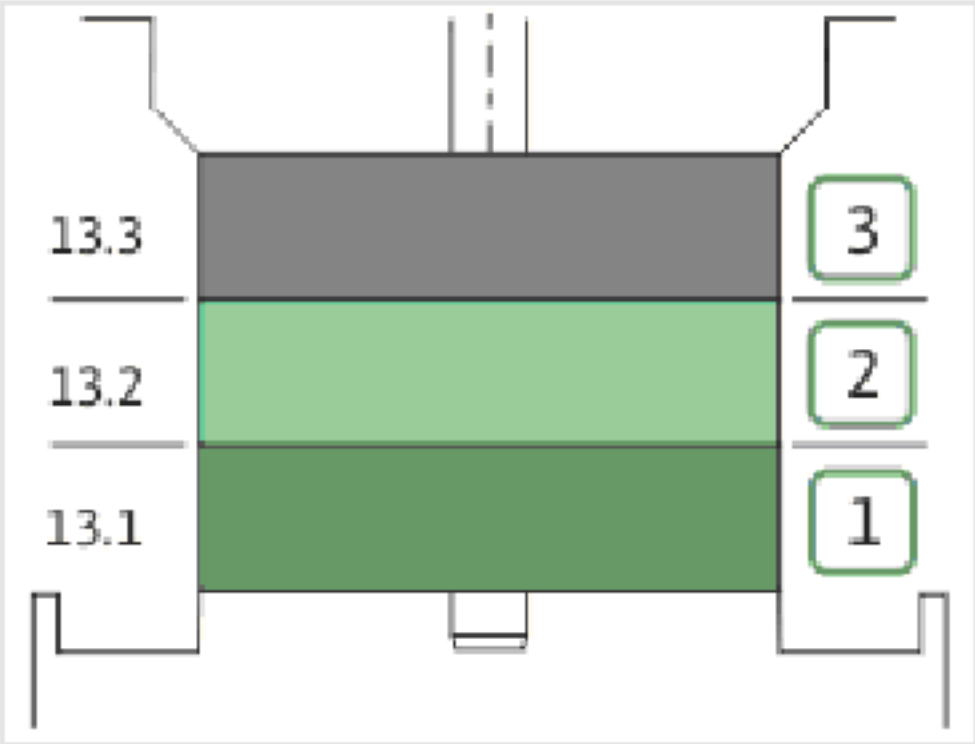
13.3
13.2
13.1
3
2
1

| Item | Article no. | Description | Quantity |
|---|---|---|---|
| 13.1 | 4171331 | STAGE HELIX10 1.4301KIT | 1 |
| | | > MACH.STG-CASING-WOGV-WNR-M+10-304 | 1 |
| | | > IMPELLER-M+10-304 | 1 |
| 13.2 | 4172792 | INTERMEDIATE STAGE HELIX 10 1.4301 KIT | 1 |
| | | > MACH.BEARING-STG-CASING-WNR-M+10-304 | 1 |
| | | > IMPELLER-M+10-304 | 1 |
| | | > SHAFT SLEEVE-SPACER-Ø19,35x18,465-304 | 1 |
| | | > SHAFT-SLEEVE-D16xD20x18-CW | 1 |
| 13.3 | 4172793 | INTERMEDIATE STAGE HELIX 10 1.4301 KIT | 1 |
| | | > MACH.STD-STG-CASING-WGV+NR-M+10-304 | 1 |
| | | > IMPELLER-M+10-304 | 1 |
| | | > IMPELLER SPACER Ø16,05X19,45-L36,465-304 | 1 |

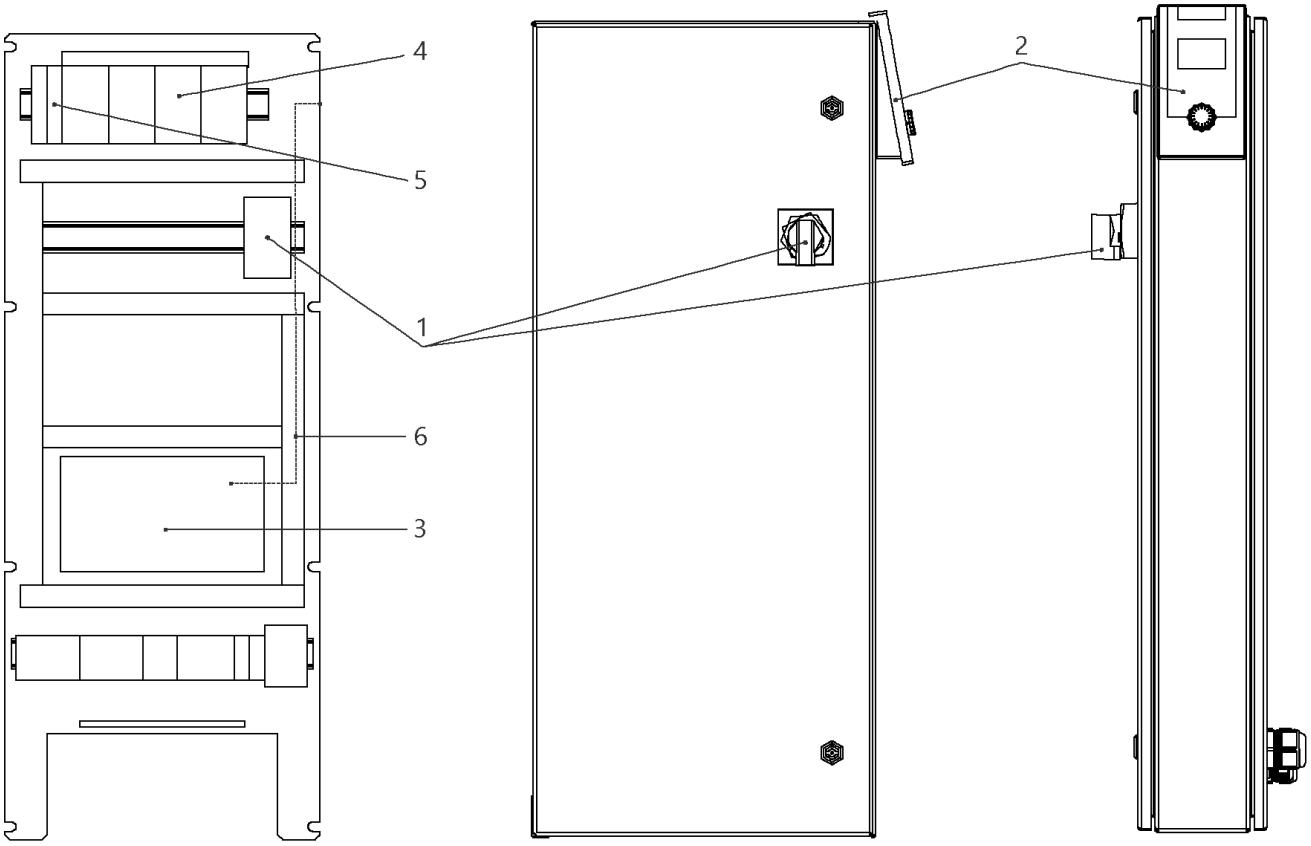
4
5
1
6
3
2

## W-CTRL-SCE-B-4x0,55-1,5KW-T4-FM-ND1

| Item | Article no. | Description | Quantity |
|---|---|---|---|
| 1 | 2104470 | MAIN SWITCH OT40F3 L250 KIT | 1 |
| 2 | 4184784 | CONTROL PANEL HMI SC KIT | 1 |
| 2 | 4185259 | ASSEMBLY DISPLAY SC PKG VP. | 1 |
| 3 | 4185257 | ASSEMBLY CPU SCe Booster VP. | 1 |
| 4 | 2051217 | AUTOM.CIRCUIT BREAKER S203 B16 TO7,5kW | 1 |
| 5 | 2046288 | CIRCUIT BREAKER S201 B16 | 1 |
| 6 | 4197081 | CABLE RJ45 CAT6 0,5M RED SC-PANEL VP. | 1 |

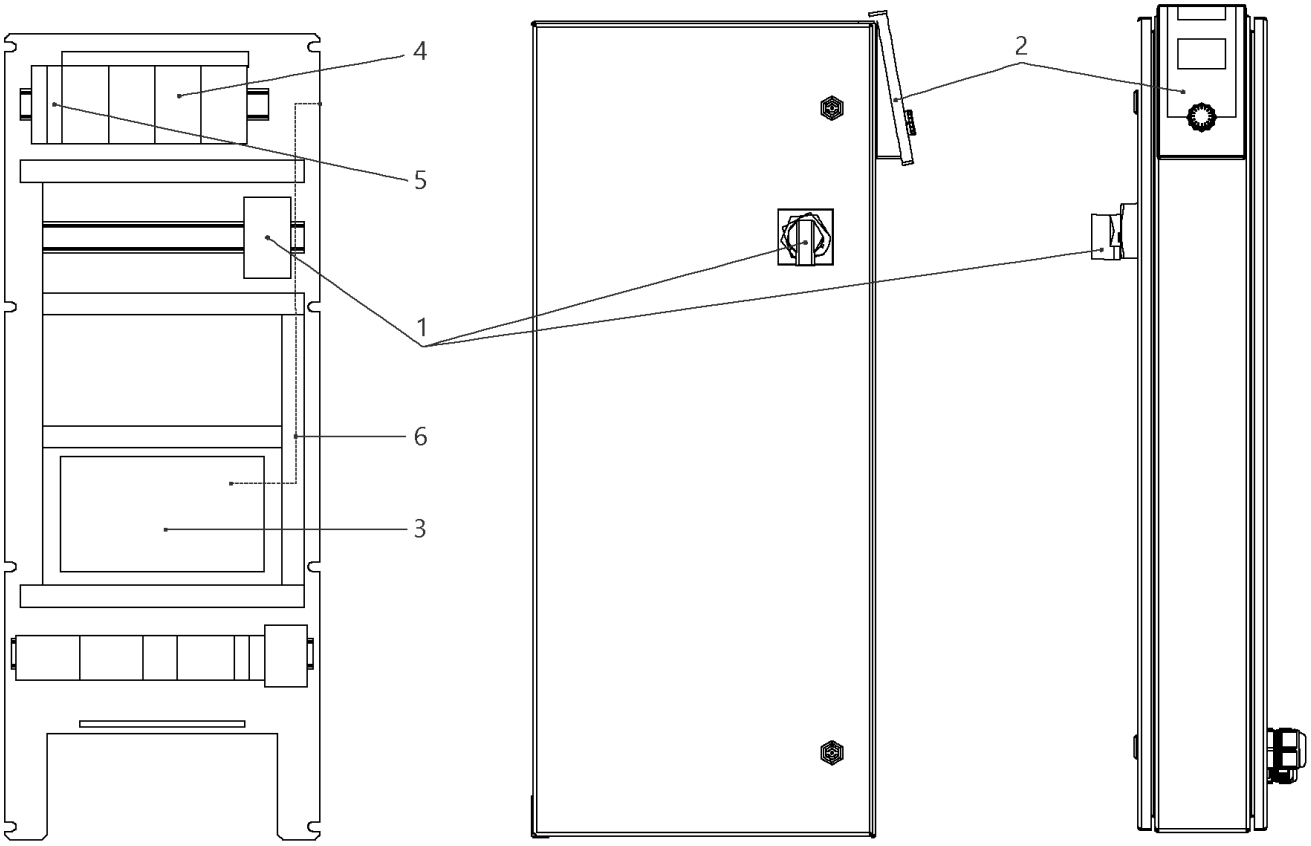
4
5
1
6
3
2

## W-CTRL-SCE-B-4x10A-T34-FM-ND1-AVC-PKG (2541915)

| Item | Article no. | Description | Quantity |
|---|---|---|---|
| 1 | 2104473 | MAIN SWITCH OT63F3 L105 KIT | 1 |
| 2 | 4184784 | CONTROL PANEL HMI SC KIT | 1 |
| 2 | 4185259 | ASSEMBLY DISPLAY SC PKG VP. | 1 |
| Note: DISPLAY ALONE / PLATINE SEULE | | | |
| 3 | 4185257 | ASSEMBLY CPU SCe Booster VP. | 1 |
| 5 | 2046288 | CIRCUIT BREAKER S201 B16 | 1 |
| 4 | 2119861 | AUTOMATIC CIRCUIT BREAKER S203 B13 3POL. | 1 |
| 6 | 4197081 | CABLE RJ45 CAT6 0,5M RED SC-PANEL VP. | 1 |

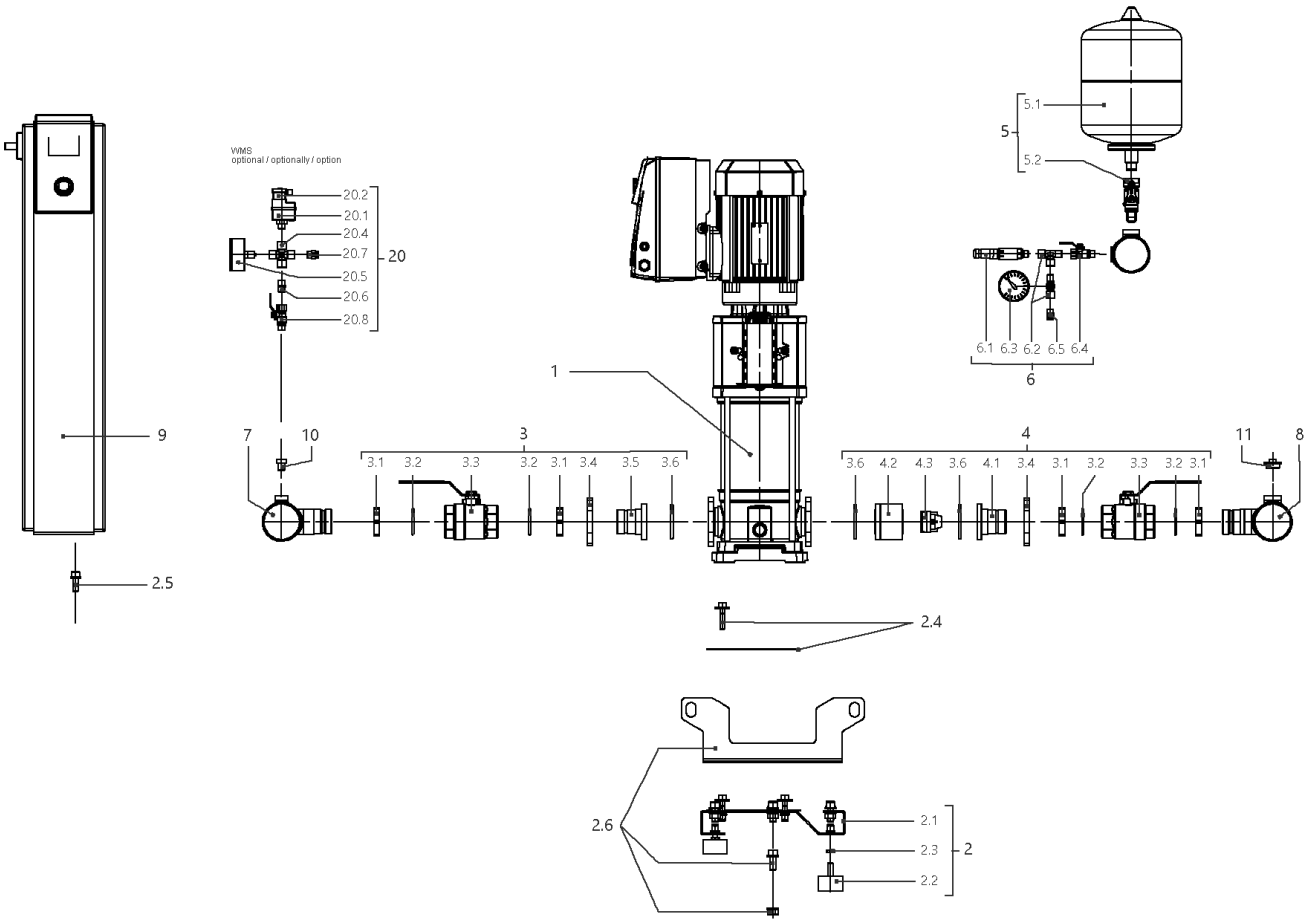
VVMS
optional / optionally / option
20.2
20.1
20.4
20.7
20.5
20.6
20.8
20
5.1
5
5.2
6.1 6.3 6.2 6.5 6.4
6
1
9
7
10
3
3.1 3.2 3.3 3.2 3.1 3.4 3.5 3.6
4
3.6 4.2 4.3 3.6 4.1 3.4 3.1 3.2 3.3 3.2 3.1
11
8
2.5
2.4
2.6
2.1
2.3
2.2
2

## SiBoost Smart 4HELIX VE1004 (2536354)

| Item | Article no. | Description | Quantity |
|---|---|---|---|
| 1 | | HELIX VE1004-1/16/E/S | 1 |
| Note: TO / BIS / JUSQU'AU 31/03/2016 | | | |
| 1 | 4201551 | HELIX VE1004-1/16/E/S | 1 |
| Note: FROM / AB / À PARTIR DU 01/04/2016 | | | |
| 2 | 4197134 | BASE PLATE DE4 1450x420 KIT | 1 |
| Note: TO / BIS / JUSQU'AU 28/02/2013 | | | |
| 2.1 | | > BASEPLATE_4x4/6/10/16V_E300_BOX_150 | 1 |
| 2.2 | 2028654 | > VIBRATION DAMPER D.50X30 M10X28 | 1 |
| 2.3 | 2028281 | > NUT M10 DIN936 (ISO4035) 17H VZ | 1 |
| 2.4 | 4197083 | > HOLDER PUMP Helix 10/16 KIT | 1 |
| 2.5 | 4197084 | > HOLDER SWITCHBOX WILO Smart Control KIT | 1 |
| 2.6 | 4197117 | > LIFTING Siboost HELIX SC KIT | 1 |
| 2 | 4200143 | BASE PLATE DE4 1450x300 KIT | 1 |
| Note: FROM / AB / À PARTIR DU 01/03/2013 - TO / BIS / JUSQU'AU 06/02/2014 | | | |
| 2.1 | | > BASEPLATE_4x4/6/10V_E300_1450x300BOX_150 | 1 |
| 2.2 | 2028654 | > VIBRATION DAMPER D.50X30 M10X28 | 1 |
| 2.3 | 2028281 | > NUT M10 DIN936 (ISO4035) 17H VZ | 1 |
| 2.4 | 4199875 | > HOLDER PUMP Siboost Helix V2/4 KIT | 1 |
| 2.5 | 4197084 | > HOLDER SWITCHBOX WILO Smart Control KIT | 1 |
| 2.6 | 4197085 | > LIFTING Siboost HELIX SC KIT | 1 |
| 2 | 4197128 | BASE PLATE DE4 1450x300 KIT | 1 |
| Note: FROM / AB / À PARTIR DU 07/02/2014 | | | |
| 2.1 | | > BASEPLATE_4x4/6/10V_E300_1450x300BOX_150 | 1 |
| 2.2 | 2028654 | > VIBRATION DAMPER D.50X30 M10X28 | 1 |
| 2.3 | 2028281 | > NUT M10 DIN936 (ISO4035) 17H VZ | 1 |
| 2.4 | 4197083 | > HOLDER PUMP Helix 10/16 KIT | 1 |
| 2.5 | 4197084 | > HOLDER SWITCHBOX WILO Smart Control KIT | 1 |
| 2.6 | 4197085 | > LIFTING Siboost HELIX SC KIT | 1 |
| 3 | 4197072 | SUCTION SIDE Siboost Helix10/16 KIT | 1 |
| 3.1 | 2032623 | > NUT G1 1/2"SW55 MS | 1 |
| 3.2 | 2032616 | > O-RING ID.44X3,53N DIN3771 E7502 | 1 |
| 3.2 | 2534877 | > BALL TAP KDW40-H G11/2I-I-DN40 DVGW | 1 |
| 3.4 | 2032626 | > OVAL FLANGE D52-LK100 ST-VZ | 1 |
| 3.5 | 2032627 | > UNION INSERT DN40 LAPPED FLANGE | 1 |

| Item | Article no. | Description | Quantity |
|---|---|---|---|
| 3.6 | 2032628 | > O-RING ID.56,52X5,33N DIN3771 E7502 | 1 |
| 4 | 4197074 | DELIVERY SIDE Siboost Helix V10 KIT | 1 |
| 3.1 | 2032623 | > NUT G1 1/2"SW55 MS | 1 |
| 3.2 | 2032616 | > O-RING ID.44X3,53N DIN3771 E7502 | 1 |
| 3.3 | 2534877 | > BALL TAP KDW40-H G11/2I-I-DN40 DVGW | 1 |
| 3.4 | 2032626 | > OVAL FLANGE D52-LK100 ST-VZ | 1 |
| 4.1 | 2054316 | > UNION INSERT DN40 LAPPED FLANGE(W.SLOT) | 1 |
| 4.2 | 2054317 | > HOUSING F.NON RETURN VALVE(RV-IN) DN40 | 1 |
| 4.3 | 2032631 | > NON-RETURN-DEVICE DN40 (MTR)TYP RV-IN | 1 |
| 3.6 | 2032628 | > O-RING ID.56,52X5,33N DIN3771 E7502 | 1 |
| 5 | 2032642 | DIAPHREM TANK 8L/PN16 DIN4807/T5 KIT | 1 |
| 5.1 | 2045914 | > DIAPHREM TANK 8L TYP-DD 16BAR | 1 |
| 5.2 | 2027853 | > FLOW FITTING G3/4 FOR DIAPHRAGM VES. | 1 |
| 6 | 4197076 | PRESSURE SENSOR/ GAUGE 0-16BAR KIT | 1 |
| 6.1 | 2085909 | > PRESS.SENSOR 1/4" 0-16BAR 4-20MA VP. | 1 |
| 6.2 | 4197077 | > T-PIECE 1/4" VP. | 1 |
| 6.3 | 2028692 | > PRESSURE GAUGE NG63-PN16-G1/4 | 1 |
| 6.4 | 2028291 | > BALL TAP R1/4" PN42 GIACOMINI R254DL | 1 |
| 6.5 | 2028691 | > BLOWGUN 1/4" MS 30BAR VP. | 1 |
| 7 | 4197129 | PIPE DE4 R3''-4x11/2"+2x1/4x1200 VP. | 1 |
| 8 | 4197130 | PIPE DE4 R3''-4x11/2"+2x1/4+1x3/4x1200 | 1 |
| 9 | | W-CTRL-SCE-B-4x2,2KW-T4-FM-ND2 | 1 |
| Note: TO / BIS / JUSQU'AU 28/02/2013 | | | |
| 9 | | W-CTRL-SCE-B-4x2,2-3,0KW-T4-FM-ND1 | 1 |
| Note: FROM / AB / À PARTIR DU 01/03/2013 - TO / BIS / JUSQU'AU 18/05/2014 | | | |
| 9 | 2541915 | W-CTRL-SCE-B-4x10A-T34-FM-ND1-AVC-PKG | 1 |
| Note: FROM / AB / À PARTIR DU 19/05/2014 | | | |
| 10 | 4197079 | PLUG G1/4"x10 AISI304 KIT | 1 |
| 11 | 2032654 | PLUG R3/4" MS VIEGA 1751 | 1 |
| 20 | | ASSEMBLY WMS. DE-EB. +VP | 1 |
| 20.1 | 2028652 | > PRESSURE SWITCH PS3-ASR 1/(1,3) VP. | 1 |
| 20.2 | 2130983 | > PLUG PS3-415 WITH KABEL 1,5M 2NO VP. | 1 |
| 20.4 | 2028290 | > CROSSPIECE R1/4" MS-NICKEL | 1 |
| 20.5 | 2028687 | > PRESSURE GAUGE NG63 R1/4" HI.0-6BAR | 1 |

| Item | Article no. | Description | Quantity |
|---|---|---|---|
| 20.6 | 2054268 | > DUAL NIPPLE G1/4" x G1/4" MS VP. | 1 |
| 20.7 | 2028691 | > BLOWGUN 1/4" MS 30BAR VP. | 1 |
| 20.8 | 2028291 | > BALL TAP R1/4" PN42 GIACOMINI R254DL | 1 |

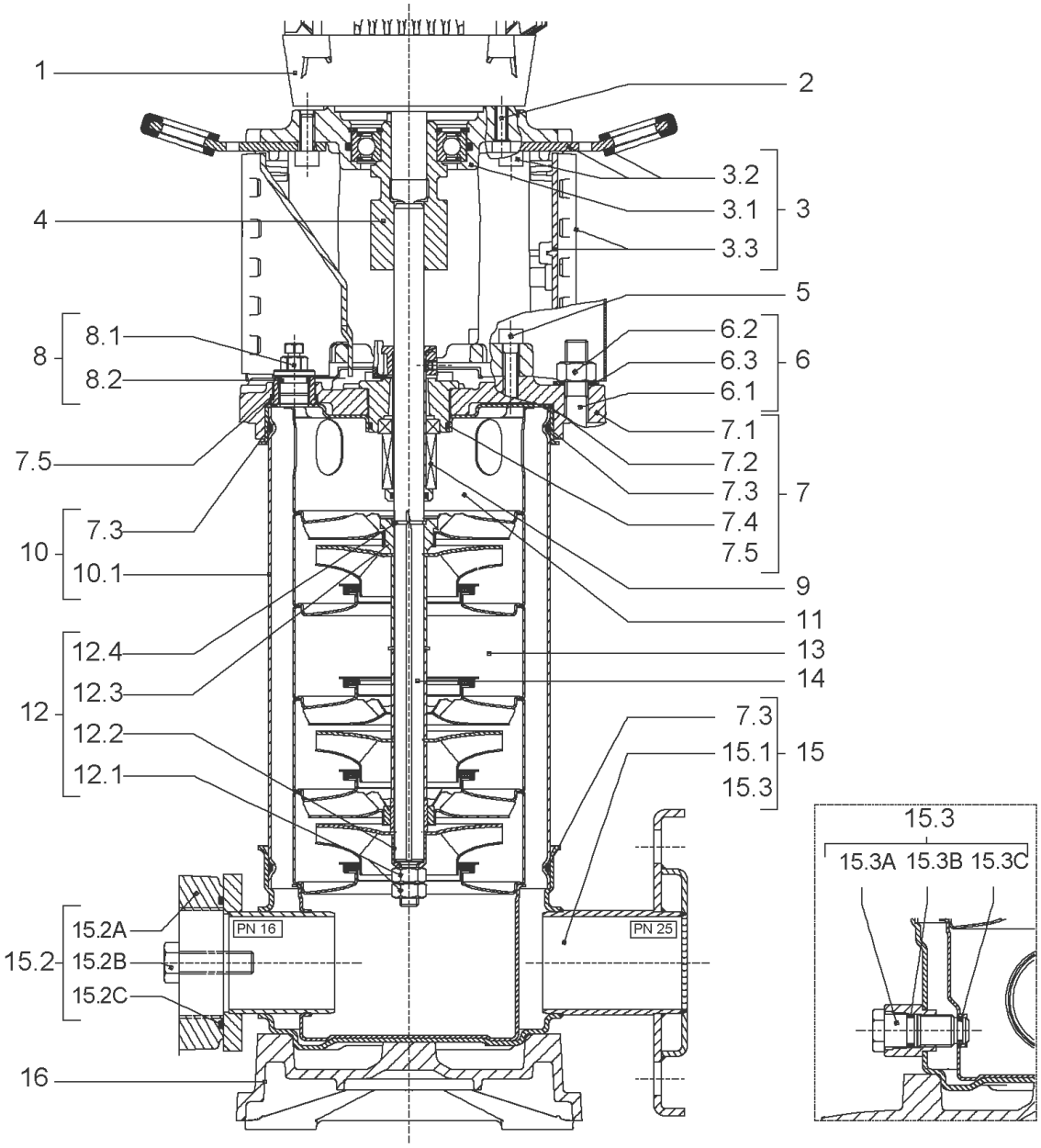
1
2
3.2
3.1
3
3.3
4
5
8.1
8
8.2
6.2
6.3
6
6.1
7.1
7.5
7.2
7.3
7
7.4
7.3
10
7.5
10.1
9
11
12.4
13
12.3
14
12
12.2
7.3
15.1
15
12.1
15.3
15.3
15.3A 15.3B 15.3C
15.2A
PN 16
PN 25
15.2
15.2B
15.2C
16

| Item | Article no. | Description | Quantity |
|---|---|---|---|
| 1 | | DRIVE HELIX-VE1004-IE2-WE KIT | 1 |
| Note: MOTOR BRAND WILO ELEC | | | |
| 1 | | DRIVE HELIX-VE1004-IE4-WE-KIT | 1 |
| Note: MOTOR BRAND WILO ELEC | | | |
| 2 | 4159703 | SCREW M8X40 (4 PIECES) | 1 |
| 3 | 4172795 | LANTERNE FT115 HELIX KIT | 1 |
| 3.1 | | > M+5_6_LANTERN_ONE-PIECE_FT115_CATA | 1 |
| 3.2 | 2127604 | > EYELET CPL.FT HELIX(2 PIECES) | 1 |
| 3.3 | 4159692 | > COUPLING PROTECTOR FT HELIX KIT | 1 |
| 4 | 4159709 | COUPLING D.16xD.24 FT115 HELIX KIT | 1 |
| 5 | 4159707 | SCREW M8X30 (4 PIECES) | 1 |
| 6 | 4177817 | STUD BOLT M12X341 KIT | 1 |
| 6.1 | | > TIE BOLT M12-341x18x30-1.4057 | 1 |
| 6.2 | 2094647 | > NUT M12 M12 ISO4032 VP. | 1 |
| 6.3 | 2123557 | > WASHER CS-12.4-24-1.6-NFE25 (4 PIECES) | 1 |
| 7 | 4210143 | STATIONARY RING HOLDER HELIX 6" EPDM | 1 |
| 7.2 | 2127607 | > STATIONARY RING HOLDER 6" HELIX 1.4301 V | 1 |
| 7.3 | 4176513 | > O-RING FOR PUMP JACKET VP. | 1 |
| 7.4 | 2127603 | > O-RING ID.37,6x2,4 EPDM VP. | 1 |
| 7.5 | 2127602 | > O-RING ID.21,35x2 EPDM VP. | 1 |
| 8 | 4159686 | FILING/PURGING PLUG HELIX EPDM KIT | 1 |
| 9 | 4171327 | SEAL-KIT-HELIX6-10-16 O/E KIT | 1 |
| 10 | 2127575 | HOUSING PIPE D.152x210 1.4301 KIT | 1 |
| 11 | 4172791 | CENTERING STAGE-RETURN HELIX10 1.4301VP. | 1 |
| 12 | 4209273 | SHAFT EQUIPMENT HELIX V10 KIT | 1 |
| 12.1 | | > NUT-H-M10-A4.70 | 1 |
| 12.2 | | > SERRATED LOCK WASHER M+10M3-316L | 1 |
| 12.3 | | > IMPELLER STOP RING L33,6-304 | 1 |
| 12.4 | | > STOP-RUSH-1/2-D16xd2-M+316 | 1 |
| 13 | | HYDRAULIC HELIX V 1004 1.4307 | 1 |
| 14 | 4177820 | SHAFTS Ø16X330 1. 4301 VP. | 1 |
| 15 | 4159682 | PUMP HOUSING HELIX DN50 PN16 1.4301 KIT | 1 |
| 7.3 | 4176513 | > O-RING FOR PUMP JACKET VP. | 1 |
| 15.1 | | > BLASTING PPE HOUSING V-PN16-DN50-304 | 1 |

| Item | Article no. | Description | Quantity |
|---|---|---|---|
| 15.2 | 4217893 | > COUNTER FLANGE-G1"1/2-PN16-GJL KIT | 1 |
| 15.3 | 4171321 | > PRIMING/DRAIN PLUG EPDM HELIX KIT | 1 |
| 16 | 4176517 | BASEPLATE V8/10 VP. | 1 |

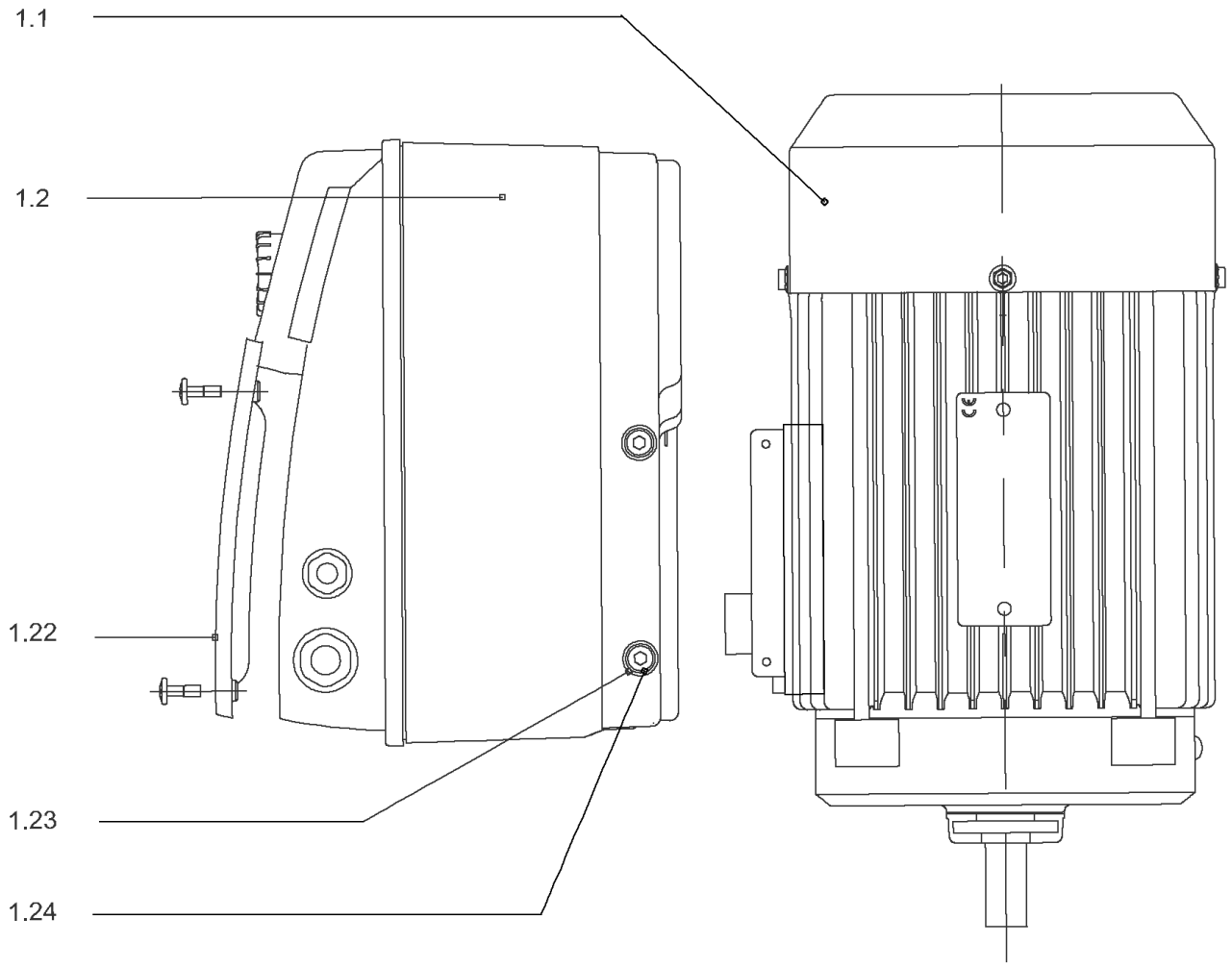
1.1
1.2
1.22
1.23
1.24

## DRIVE HELIX-VE1004-IE2-WE KIT

| Item | Article no. | Description | Quantity |
|---|---|---|---|
| 1.1 | 4185016 | MOTOR 2,2/2/90 3~ 380V 60HZ IE2 WE VP. | 1 |
| | | SPARE PARTS MOTOR:ON REQUEST | 1 |
| 1.2 | 4209650 | MODULE HELIX-VE1004-IE2-WE KIT | 1 |
| 1.22 | 2054227 | > MODULE COVER/GASKET TL3/4 KIT | 1 |
| 1.23 | 4215716 | > SCREW M5X16 DIN912 8.8 A2A (4pieces) VP. | 1 |
| 1.24 | 2057978 | > RONDELLE A5,3 DIN6797 FST ZN (4 PIECES) | 1 |

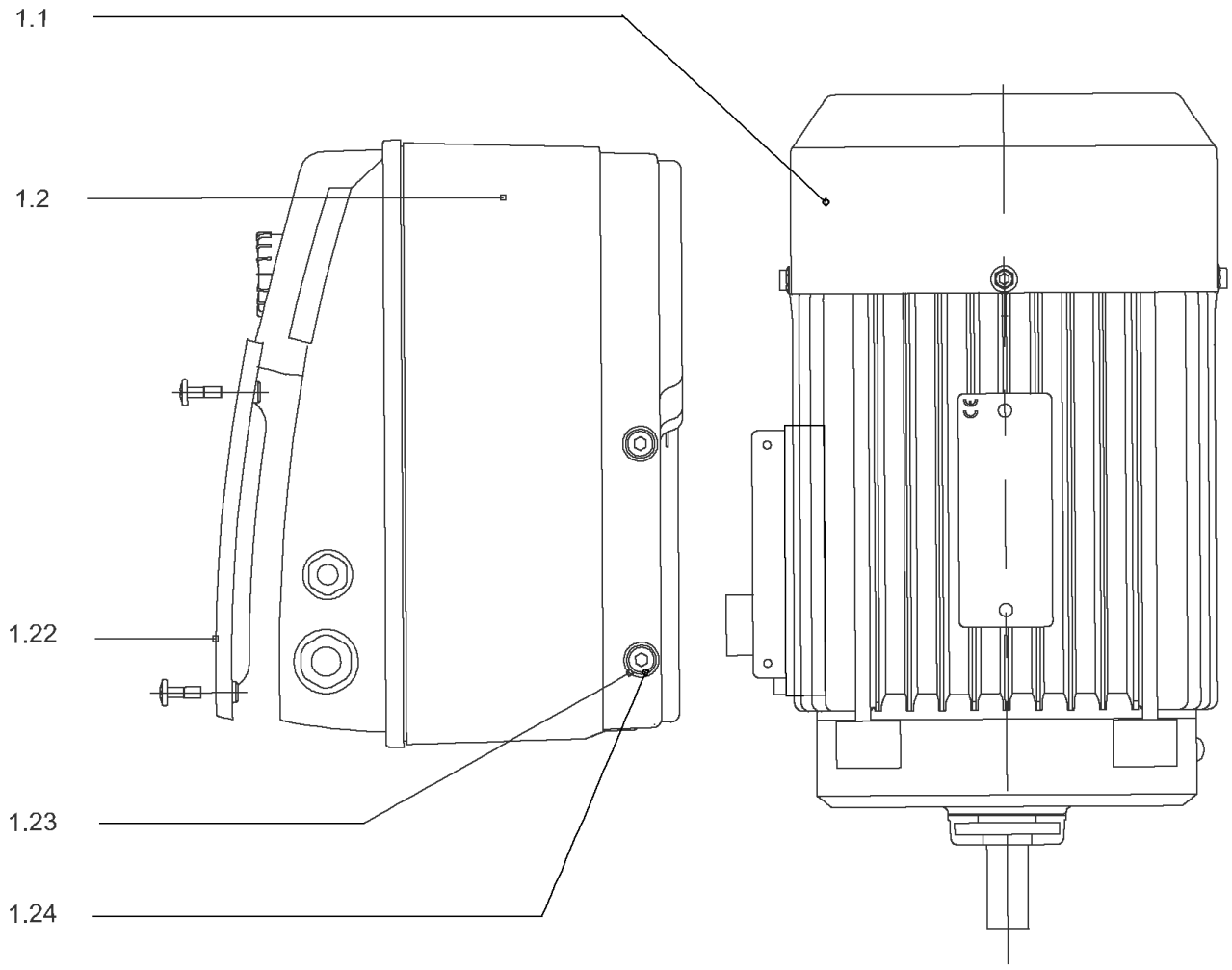
1.1
1.2
1.22
1.23
1.24

## DRIVE HELIX-VE1004-IE4-WE-KIT

| Item | Article no. | Description | Quantity |
|---|---|---|---|
| 1.1 | 4207920 | MOTOR 2.2/2/90 3~ 380V 60HZ IE4 WE VP. | 1 |
| | | SPARE PARTS MOTOR:ON REQUEST | 1 |
| 1.2 | 4209592 | MODULE HELIX-VE1004-IE4-WE KIT | 1 |
| 1.22 | 2054227 | > MODULE COVER/GASKET TL3/4 KIT | 1 |
| 1.23 | 4215716 | > SCREW M5X16 DIN912 8.8 A2A (4pieces) VP. | 1 |
| 1.24 | 2057978 | > RONDELLE A5,3 DIN6797 FST ZN (4 PIECES) | 1 |

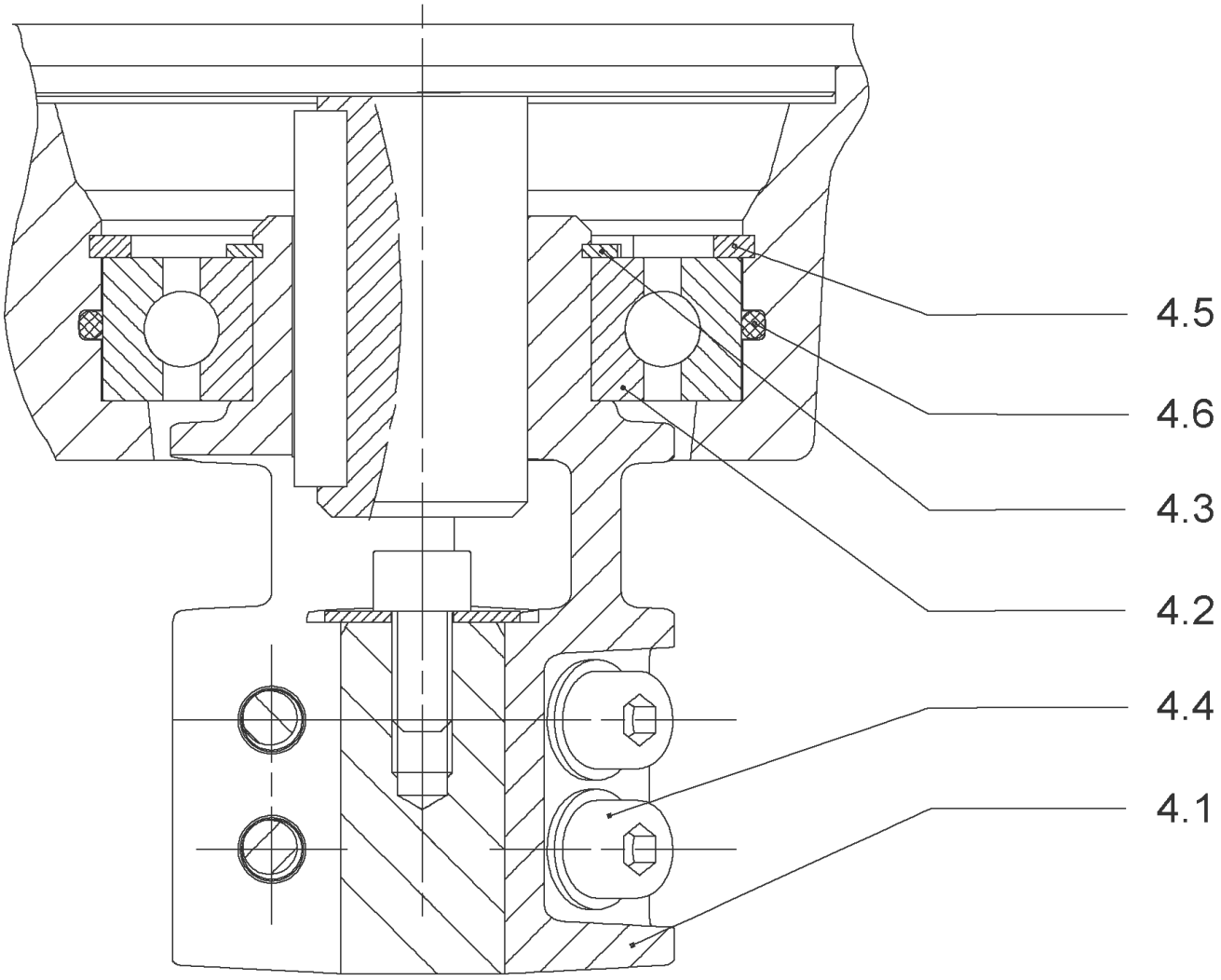
4.5
4.6
4.3
4.2
4.4
4.1

## COUPLING D.16xD.24 FT115 HELIX KIT (4159709)

| Item | Article no. | Description | Quantity |
|---|---|---|---|
| 4.1 | | COUPLING M+ Ø16XØ24 FT115 MACHINED | 1 |
| 4.2 | 2131023 | BALL BEARING 6207/ZZ-C3(HT)VP. | 1 |
| 4.3 | 4234254 | CIRCLIP-FOR-SHAFT-D35x1.5 VP. | 1 |
| 4.4 | 4157726 | SCREW KIT M8X30 (4 PIECES) | 1 |
| 4.5 | 4234251 | CIRCLIP-D72x2.5 VP. | 1 |
| 4.6 | 4234246 | O-RING 72X3 VP. | 1 |
| | | NOMEL CONTACT WASHER 8x16x1,4 STEEL ZC | 1 |

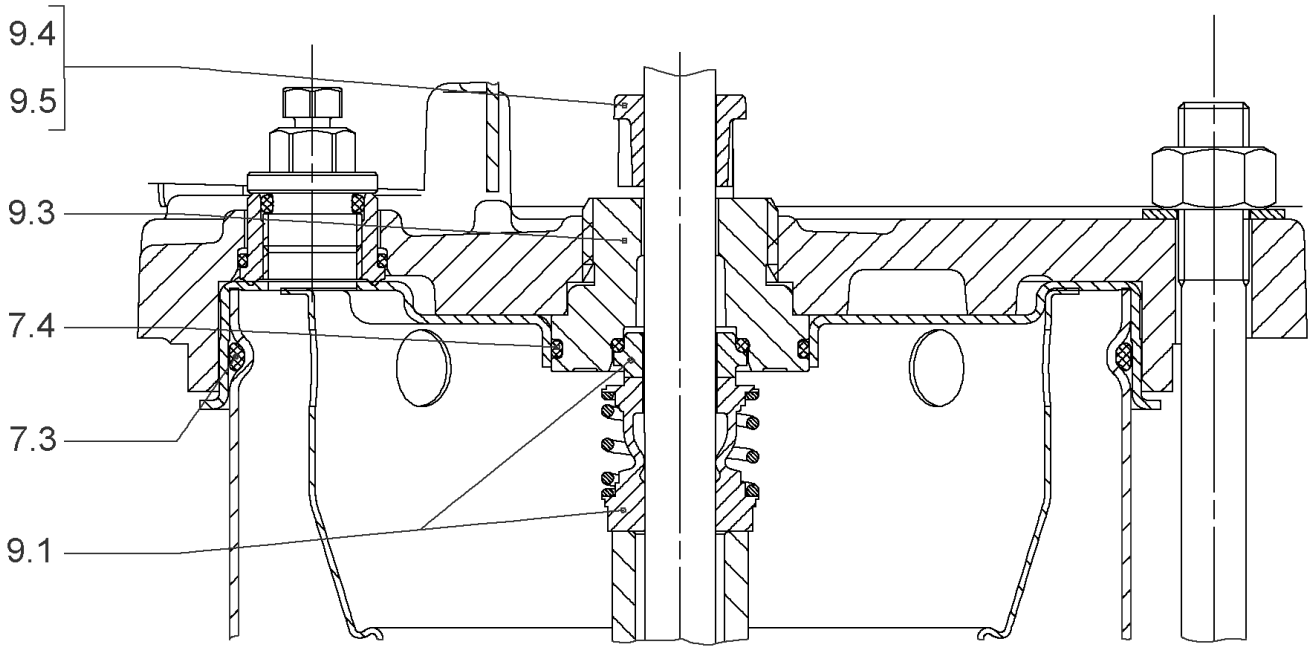
9.4
9.5
9.3
7.4
7.3
9.1

## SEAL-KIT-HELIX6-10-16 O/E KIT (4171327)

| Item | Article no. | Description | Quantity |
|---|---|---|---|
| 7.3 | 4176513 | O-RING FOR PUMP JACKET VP. | 1 |
| 7.4 | 2127603 | O-RING ID.37,6x2,4 EPDM VP. | 1 |
| 9.1 | 4177801 | MECH.SEAL HELIX6-10-16 O/E VP. | 1 |
| 9.3 | 4177798 | MACHINED RING HOLDER M+6" Ø16 304 VP. | 1 |
| 9.5 | 4177799 | MACHINED DRIVE RING Ø16 VP. | 1 |
| 9.4 | 4176520 | SCREW CH M5x5 A4-70 ( 3PIECES ) | 1 |

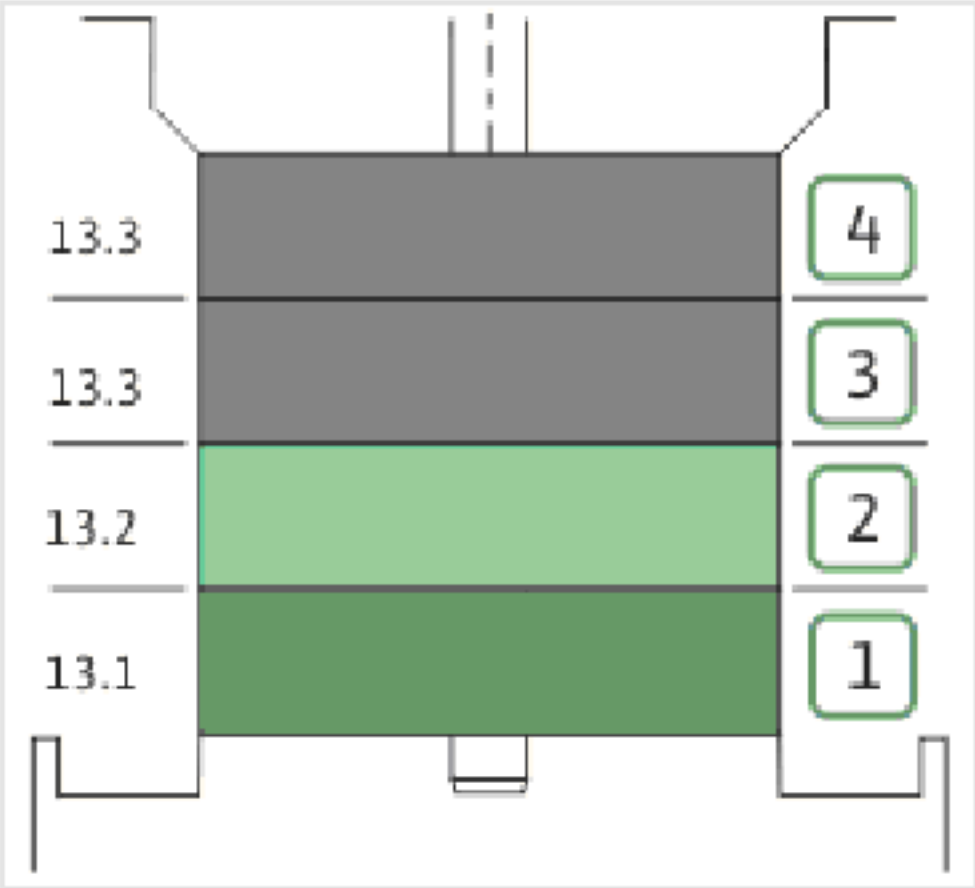
13.3
13.3
13.2
13.1
4
3
2
1

| Item | Article no. | Description | Quantity |
|---|---|---|---|
| 13.3 | 4172793 | INTERMEDIATE STAGE HELIX 10 1.4301 KIT | 1 |
| | | > MACH.STD-STG-CASING-WGV+NR-M+10-304 | 1 |
| | | > IMPELLER-M+10-304 | 1 |
| | | > IMPELLER SPACER Ø16,05X19,45-L36,465-304 | 1 |
| 13.2 | 4172792 | INTERMEDIATE STAGE HELIX 10 1.4301 KIT | 1 |
| | | > MACH.BEARING-STG-CASING-WNR-M+10-304 | 1 |
| | | > IMPELLER-M+10-304 | 1 |
| | | > SHAFT SLEEVE-SPACER-Ø19,35x18,465-304 | 1 |
| | | > SHAFT-SLEEVE-D16xD20x18-CW | 1 |
| 13.1 | 4171331 | STAGE HELIX10 1.4301KIT | 1 |
| | | > MACH.STG-CASING-WOGV-WNR-M+10-304 | 1 |
| | | > IMPELLER-M+10-304 | 1 |

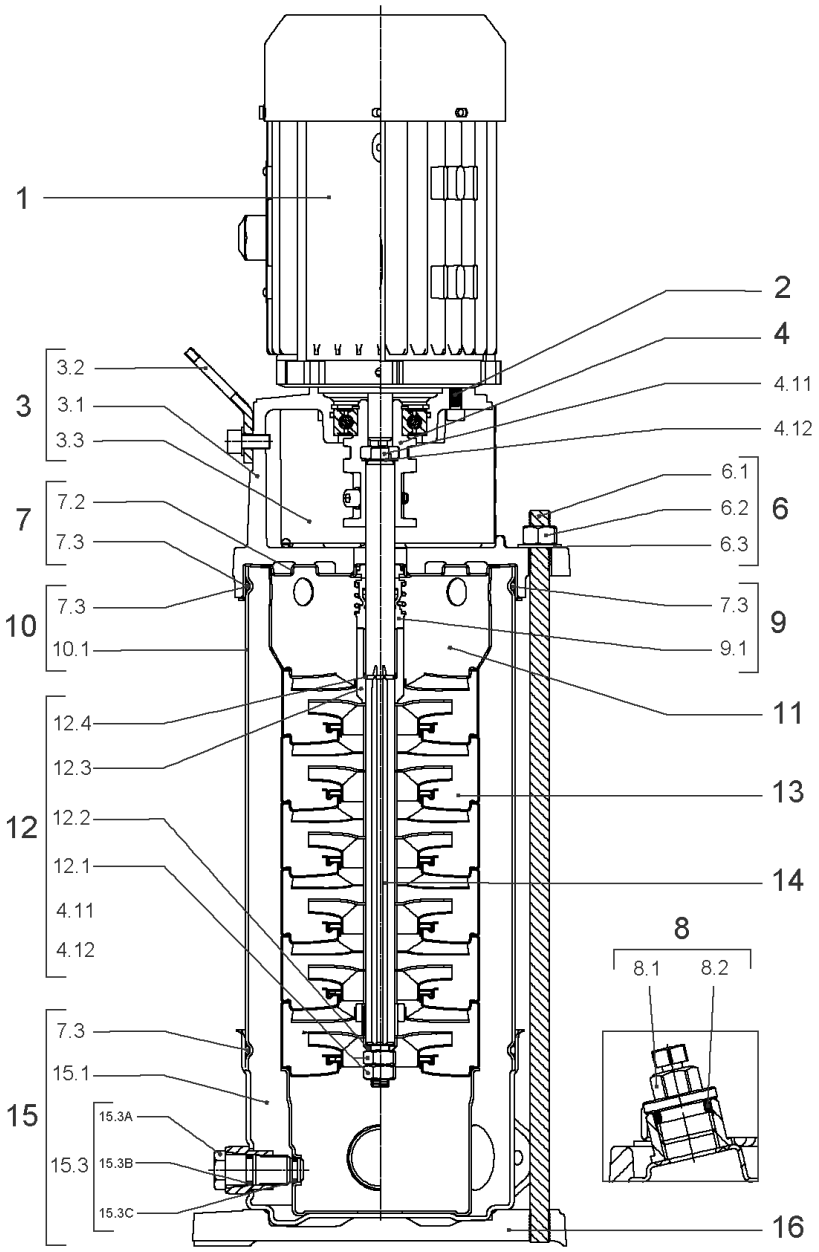
1
2
4
4.11
4.12
3
3.2
3.1
3.3
7
7.2
7.3
10
7.3
10.1
6
6.1
6.2
6.3
9
7.3
9.1
11
12
12.4
12.3
12.2
12.1
4.11
4.12
13
14
8
8.1
8.2
15
7.3
15.1
15.3
15.3A
15.3B
15.3C
16

## HELIX VE1004-1/16/E/S (4201551)

| Item | Article no. | Description | Quantity |
|---|---|---|---|
| 1 | | DRIVE HELIX-VE1004-IE4-WE-KIT | 1 |
| Note: MOTOR BRAND WILO ELEC | | | |
| | | SPARE PARTS MOTOR:ON REQUEST | 1 |
| 2 | 4159707 | SCREW M8X30 (4 PIECES) | 1 |
| 3 | 4213784 | LANTERN FT115 HELIX KIT | 1 |
| 3.1 | | > LANT-MOT-VMI-ReDTC6"-FT115-MACHINED+CATA | 1 |
| 3.2 | 4184852 | > EYELET CPL.FT HELIX (2 PIECES) | 1 |
| 3.3 | 4213782 | > COUPLING PROTECTOR FT115/130 HELIX KIT | 1 |
| 4 | 4159709 | COUPLING D.16xD.24 FT115 HELIX KIT | 1 |
| 6 | 4177817 | STUD BOLT M12X341 KIT | 1 |
| 6.1 | | > TIE BOLT M12-341x18x30-1.4057 | 1 |
| 6.2 | 2094647 | > NUT M12 M12 ISO4032 VP. | 1 |
| 6.3 | 2123557 | > WASHER CS-12.4-24-1.6-NFE25 (4 PIECES) | 1 |
| 7 | 4214481 | STATIONARY RING HOLDER HELIX D27 ReDTC | 1 |
| 7.2 | 4214479 | > STATIONARY RING HOLDER HELIX D27 VP. | 1 |
| 7.3 | 4176513 | > O-RING FOR PUMP JACKET VP. | 1 |
| 8 | 4212724 | FILING/PURGING PLUG HELIX ReDTC KIT | 1 |
| 8.1 | | > FILLING PLUG MVI6"-304 | 1 |
| 8.2 | 4177800 | > O-RING EPDM PLUG HELIX VP. | 1 |
| 9 | 4214483 | MECH.SEAL HELIX6-10-16 O/E ReDTC KIT | 1 |
| 9.1 | 4177801 | > MECH.SEAL HELIX6-10-16 O/E VP. | 1 |
| 7.3 | 4176513 | > O-RING FOR PUMP JACKET VP. | 1 |
| 10 | 4177818 | HOUSING PIPES Ø152-M+1004-304 KIT | 1 |
| 7.3 | 4176513 | > O-RING FOR PUMP JACKET VP. | 1 |
| 10.1 | | > HOUSING-PIPE Ø152-M+1004/1603-304 | 1 |
| 11 | 4172791 | CENTERING STAGE-RETURN HELIX10 1.4301VP. | 1 |
| 12 | 4214517 | SHAFT EQUIPMENT HELIX V10 ReDTC KIT | 1 |
| 12.1 | | > NUT-H-M10-A4.70 | 1 |
| 12.2 | | > SERRATED LOCK WASHER M+10M3-316L | 1 |
| 12.3 | | > 1/2-SNAP-RING-6/10M3-316L | 1 |
| 12.4 | | > STOP-RUSH-1/2-D16xd2-M+316 | 1 |
| 4.11 | | > SCREW CHC-M6X14-8.8-ISO4762-GEOMET500A | 1 |
| 4.12 | | > WASHER D.24 L6U ZINK | 1 |
| 13 | | HYDRAULIC HELIX V 1004 1.4307 | 1 |

| Item | Article no. | Description | Quantity |
|---|---|---|---|
| 14 | 4214495 | SHAFT D.16X278 HELIX 1.4057 VP. | 1 |
| 15 | 4159682 | PUMP HOUSING HELIX DN50 PN16 1.4301 KIT | 1 |
| 7.3 | 4176513 | > O-RING FOR PUMP JACKET VP. | 1 |
| 15.1 | | > BLASTING PPE HOUSING V-PN16-DN50-304 | 1 |
| 15.2 | 4217893 | > COUNTER FLANGE-G1"1/2-PN16-GJL KIT | 1 |
| 15.3 | 4171321 | > PRIMING/DRAIN PLUG EPDM HELIX KIT | 1 |
| 16 | 4176517 | BASEPLATE V8/10 VP. | 1 |

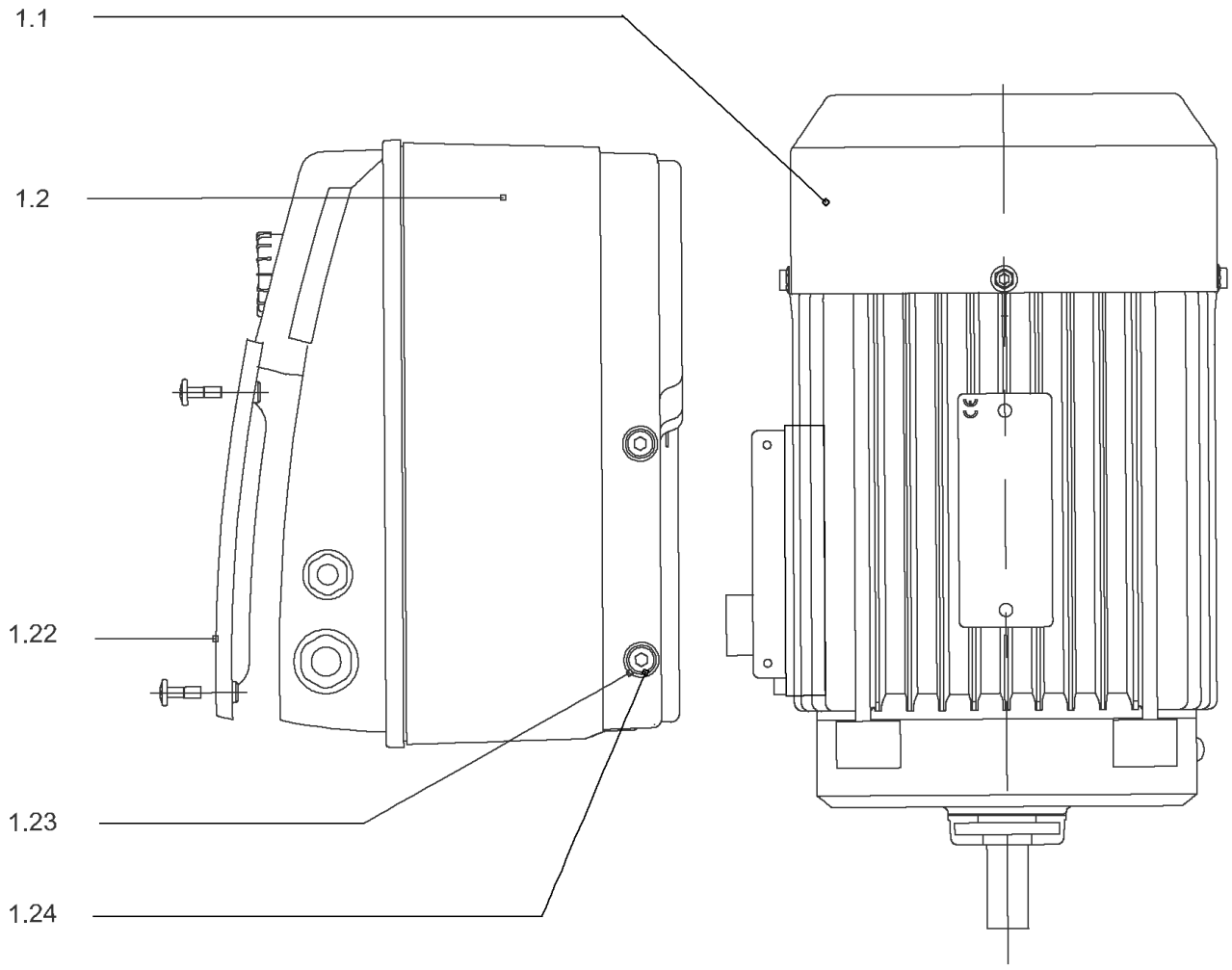
1.1
1.2
1.22
1.23
1.24

## DRIVE HELIX-VE1004-IE4-WE-KIT

| Item | Article no. | Description | Quantity |
|---|---|---|---|
| 1.1 | 4207920 | MOTOR 2.2/2/90 3~ 380V 60HZ IE4 WE VP. | 1 |
| | | SPARE PARTS MOTOR:ON REQUEST | 1 |
| 1.2 | 4209592 | MODULE HELIX-VE1004-IE4-WE KIT | 1 |
| 1.22 | 2054227 | > MODULE COVER/GASKET TL3/4 KIT | 1 |
| 1.23 | 4215716 | > SCREW M5X16 DIN912 8.8 A2A (4pieces) VP. | 1 |
| 1.24 | 2057978 | > RONDELLE A5,3 DIN6797 FST ZN (4 PIECES) | 1 |

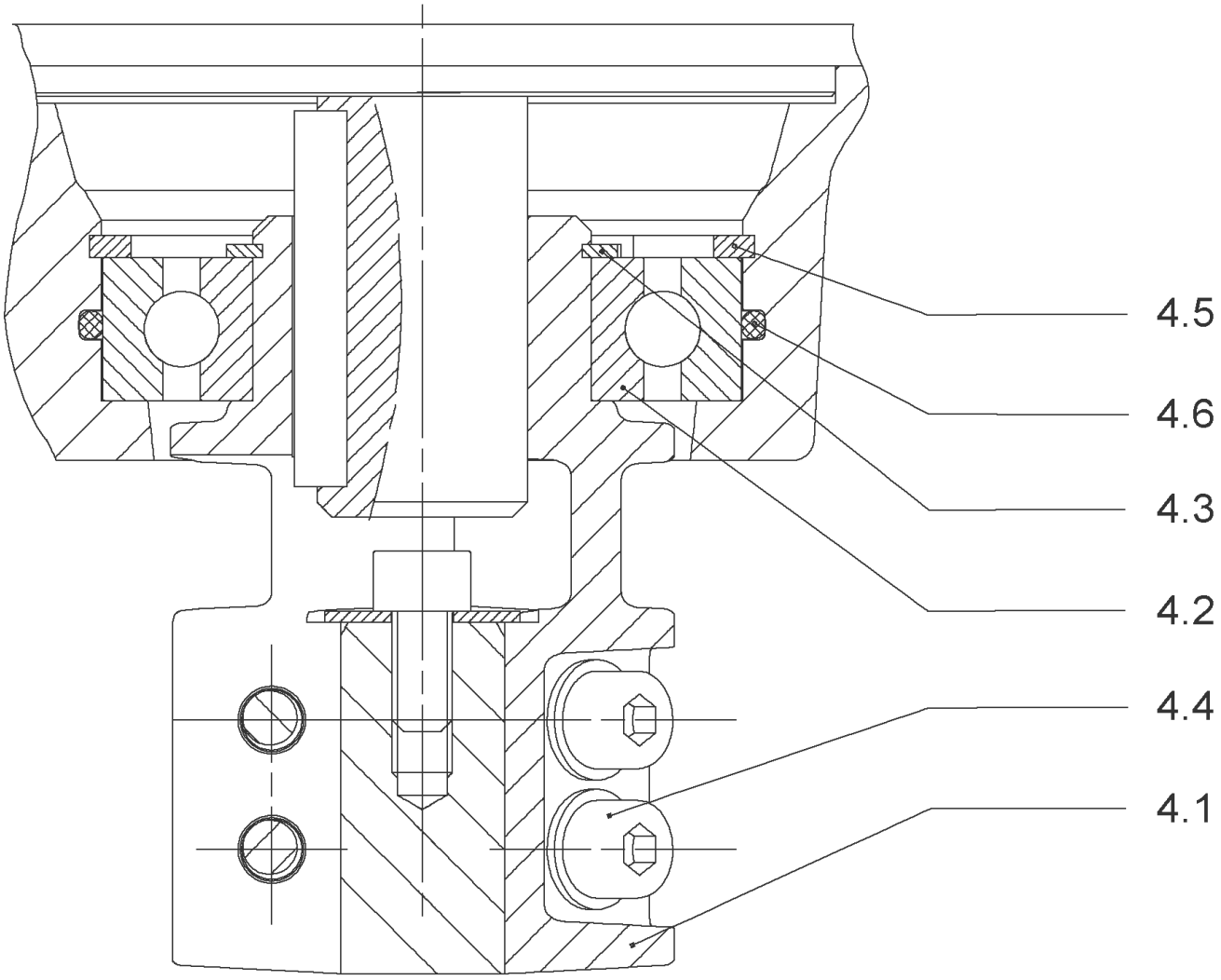
4.5
4.6
4.3
4.2
4.4
4.1

## COUPLING D.16xD.24 FT115 HELIX KIT (4159709)

| Item | Article no. | Description | Quantity |
|---|---|---|---|
| 4.1 | | COUPLING M+ Ø16XØ24 FT115 MACHINED | 1 |
| 4.2 | 2131023 | BALL BEARING 6207/ZZ-C3(HT)VP. | 1 |
| 4.3 | 4234254 | CIRCLIP-FOR-SHAFT-D35x1.5 VP. | 1 |
| 4.4 | 4157726 | SCREW KIT M8X30 (4 PIECES) | 1 |
| 4.5 | 4234251 | CIRCLIP-D72x2.5 VP. | 1 |
| 4.6 | 4234246 | O-RING 72X3 VP. | 1 |
| | | NOMEL CONTACT WASHER 8x16x1,4 STEEL ZC | 1 |

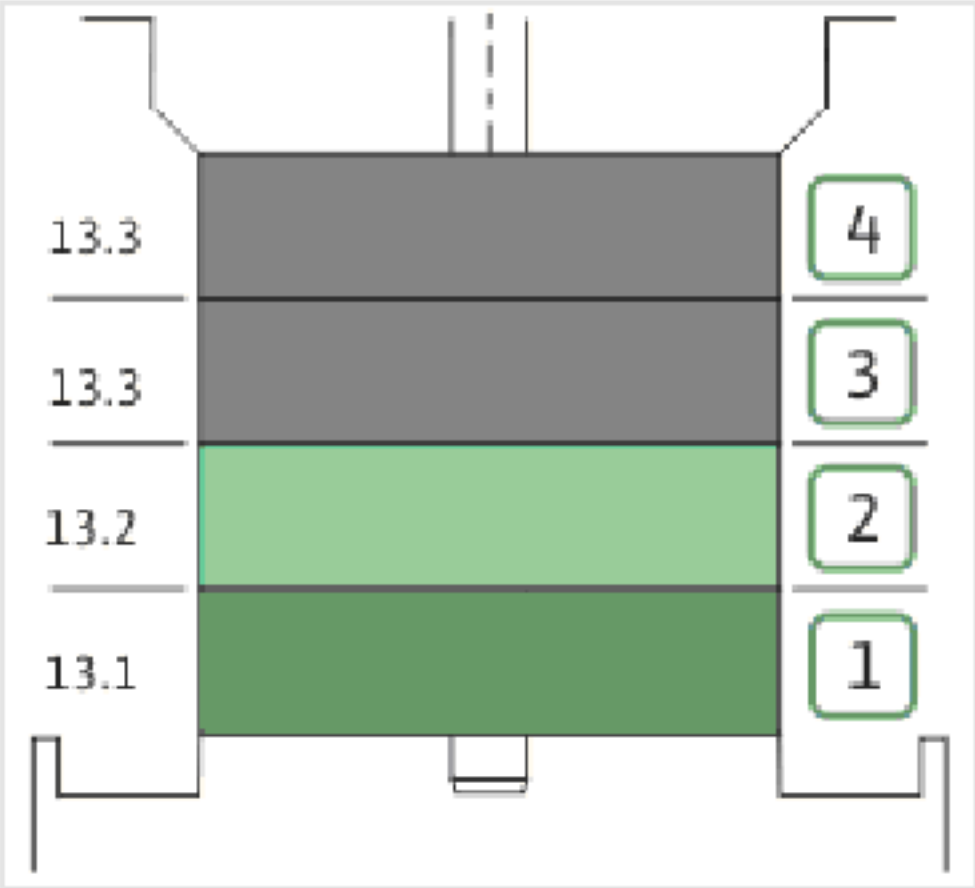
13.3
13.3
13.2
13.1
4
3
2
1

| Item | Article no. | Description | Quantity |
|---|---|---|---|
| 13.3 | 4172793 | INTERMEDIATE STAGE HELIX 10 1.4301 KIT | 1 |
| | | > MACH.STD-STG-CASING-WGV+NR-M+10-304 | 1 |
| | | > IMPELLER-M+10-304 | 1 |
| | | > IMPELLER SPACER Ø16,05X19,45-L36,465-304 | 1 |
| 13.2 | 4172792 | INTERMEDIATE STAGE HELIX 10 1.4301 KIT | 1 |
| | | > MACH.BEARING-STG-CASING-WNR-M+10-304 | 1 |
| | | > IMPELLER-M+10-304 | 1 |
| | | > SHAFT SLEEVE-SPACER-Ø19,35x18,465-304 | 1 |
| | | > SHAFT-SLEEVE-D16xD20x18-CW | 1 |
| 13.1 | 4171331 | STAGE HELIX10 1.4301KIT | 1 |
| | | > MACH.STG-CASING-WOGV-WNR-M+10-304 | 1 |
| | | > IMPELLER-M+10-304 | 1 |

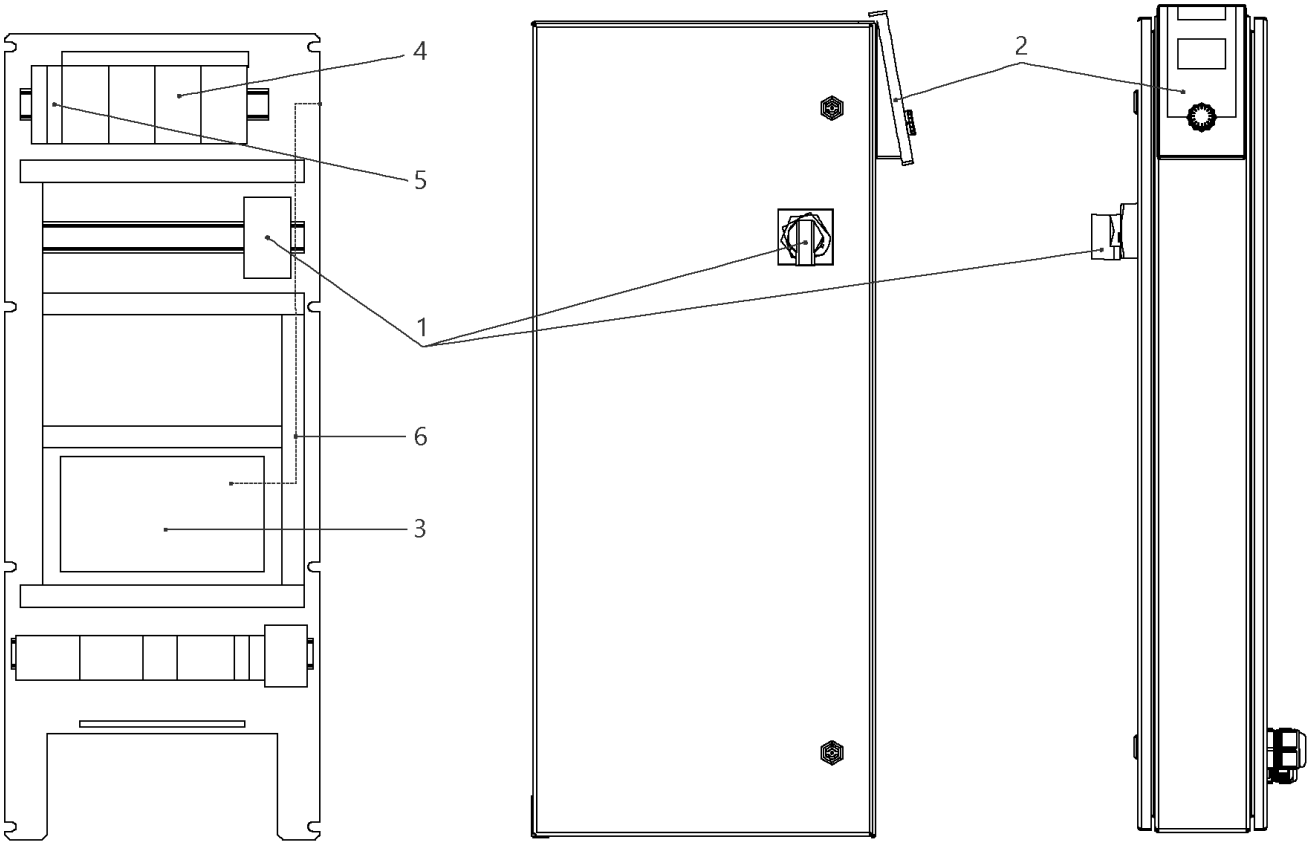
4
5
1
6
3
2

## W-CTRL-SCE-B-4x2,2KW-T4-FM-ND2

| Item | Article no. | Description | Quantity |
|---|---|---|---|
| 1 | 2104473 | MAIN SWITCH OT63F3 L105 KIT | 1 |
| 2 | 4184784 | CONTROL PANEL HMI SC KIT | 1 |
| 2 | 4185259 | ASSEMBLY DISPLAY SC PKG VP. | 1 |
| 3 | 4185257 | ASSEMBLY CPU SCe Booster VP. | 1 |
| 4 | 2051217 | AUTOM.CIRCUIT BREAKER S203 B16 TO7,5kW | 1 |
| 5 | 2046288 | CIRCUIT BREAKER S201 B16 | 1 |
| 6 | 4194956 | PATCH CABLE RJ45 CAT6 1,0M BLUE SC-PANEL | 1 |

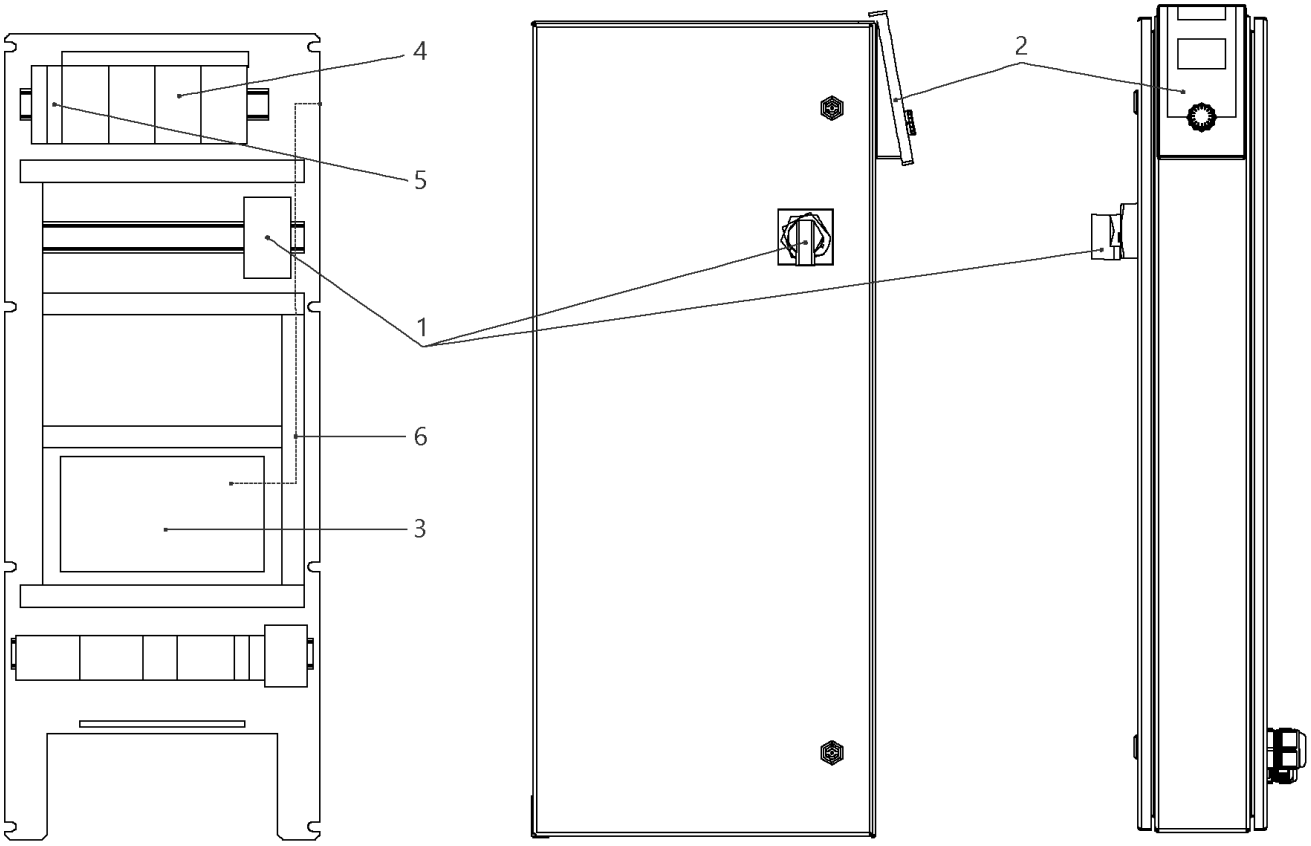
4
5
1
6
3
2

## W-CTRL-SCE-B-4x2,2-3,0KW-T4-FM-ND1

| Item | Article no. | Description | Quantity |
|---|---|---|---|
| 1 | 2104473 | MAIN SWITCH OT63F3 L105 KIT | 1 |
| 2 | 4184784 | CONTROL PANEL HMI SC KIT | 1 |
| 2 | 4185259 | ASSEMBLY DISPLAY SC PKG VP. | 1 |
| 3 | 4185257 | ASSEMBLY CPU SCe Booster VP. | 1 |
| 4 | 2051217 | AUTOM.CIRCUIT BREAKER S203 B16 TO7,5kW | 1 |
| 5 | 2046288 | CIRCUIT BREAKER S201 B16 | 1 |
| 6 | 4197081 | CABLE RJ45 CAT6 0,5M RED SC-PANEL VP. | 1 |

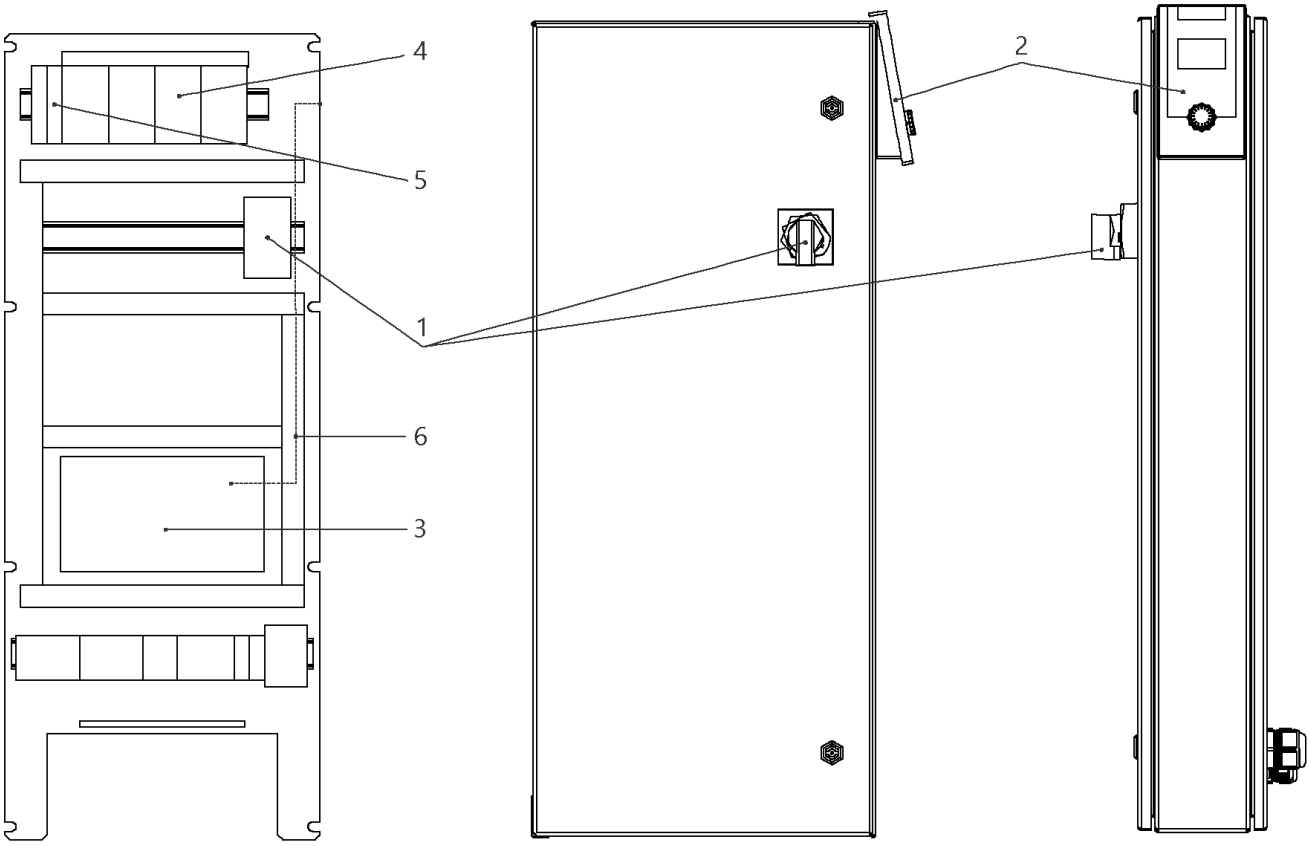
4
5
1
6
3
2

## W-CTRL-SCE-B-4x10A-T34-FM-ND1-AVC-PKG (2541915)

| Item | Article no. | Description | Quantity |
|---|---|---|---|
| 1 | 2104473 | MAIN SWITCH OT63F3 L105 KIT | 1 |
| 2 | 4184784 | CONTROL PANEL HMI SC KIT | 1 |
| 2 | 4185259 | ASSEMBLY DISPLAY SC PKG VP. | 1 |
| Note: DISPLAY ALONE / PLATINE SEULE | | | |
| 3 | 4185257 | ASSEMBLY CPU SCe Booster VP. | 1 |
| 5 | 2046288 | CIRCUIT BREAKER S201 B16 | 1 |
| 4 | 2119861 | AUTOMATIC CIRCUIT BREAKER S203 B13 3POL. | 1 |
| 6 | 4197081 | CABLE RJ45 CAT6 0,5M RED SC-PANEL VP. | 1 |

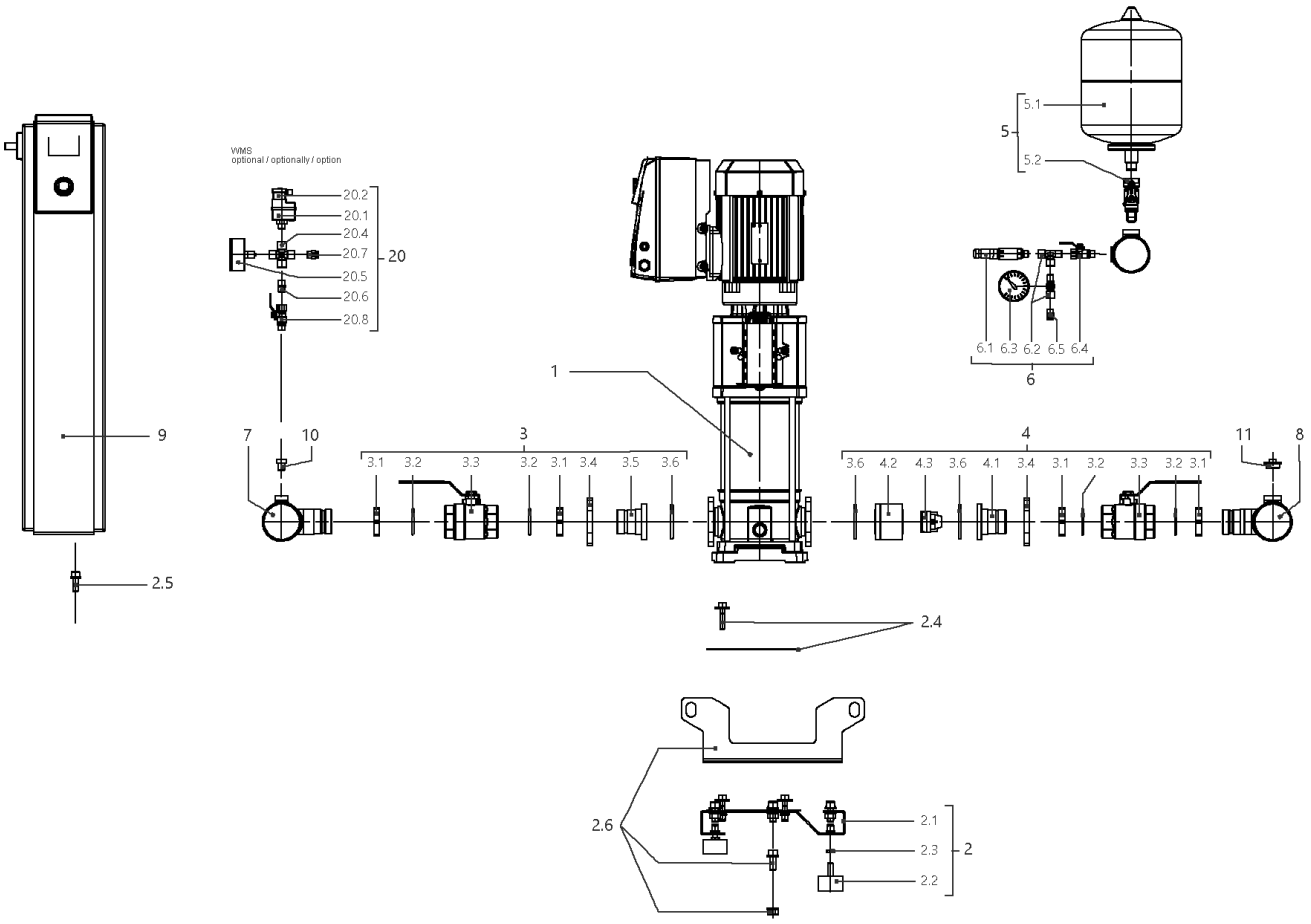
VVMS
optional / optionally / option
20.2
20.1
20.4
20.7
20.5
20.6
20.8
20
5.1
5
5.2
6.1 6.3 6.2 6.5 6.4
6
1
9
7
10
3
3.1 3.2 3.3 3.2 3.1 3.4 3.5 3.6
4
3.6 4.2 4.3 3.6 4.1 3.4 3.1 3.2 3.3 3.2 3.1
11
8
2.5
2.4
2.6
2.1
2.3
2.2
2

## SiBoost Smart 4HELIX VE1005 (2537352)

| Item | Article no. | Description | Quantity |
|---|---|---|---|
| 1 | | HELIX VE1005-1/16/E/S | 1 |
| Note: TO / BIS / JUSQU'AU 30/04/2016 | | | |
| 1 | 4201553 | HELIX VE1005-1/16/E/S | 1 |
| Note: FROM / AB / À PARTIR DU 01/05/2016 | | | |
| 2 | 4197134 | BASE PLATE DE4 1450x420 KIT | 1 |
| 2.1 | | > BASEPLATE_4x4/6/10/16V_E300_BOX_150 | 1 |
| 2.2 | 2028654 | > VIBRATION DAMPER D.50X30 M10X28 | 1 |
| 2.3 | 2028281 | > NUT M10 DIN936 (ISO4035) 17H VZ | 1 |
| 2.4 | 4197083 | > HOLDER PUMP Helix 10/16 KIT | 1 |
| 2.5 | 4197084 | > HOLDER SWITCHBOX WILO Smart Control KIT | 1 |
| 2.6 | 4197117 | > LIFTING Siboost HELIX SC KIT | 1 |
| 3 | 4197072 | SUCTION SIDE Siboost Helix10/16 KIT | 1 |
| 3.1 | 2032623 | > NUT G1 1/2"SW55 MS | 1 |
| 3.2 | 2032616 | > O-RING ID.44X3,53N DIN3771 E7502 | 1 |
| 3.2 | 2534877 | > BALL TAP KDW40-H G11/2I-I-DN40 DVGW | 1 |
| 3.4 | 2032626 | > OVAL FLANGE D52-LK100 ST-VZ | 1 |
| 3.5 | 2032627 | > UNION INSERT DN40 LAPPED FLANGE | 1 |
| 3.6 | 2032628 | > O-RING ID.56,52X5,33N DIN3771 E7502 | 1 |
| 4 | 4197074 | DELIVERY SIDE Siboost Helix V10 KIT | 1 |
| 3.1 | 2032623 | > NUT G1 1/2"SW55 MS | 1 |
| 3.2 | 2032616 | > O-RING ID.44X3,53N DIN3771 E7502 | 1 |
| 3.3 | 2534877 | > BALL TAP KDW40-H G11/2I-I-DN40 DVGW | 1 |
| 3.4 | 2032626 | > OVAL FLANGE D52-LK100 ST-VZ | 1 |
| 4.1 | 2054316 | > UNION INSERT DN40 LAPPED FLANGE(W.SLOT) | 1 |
| 4.2 | 2054317 | > HOUSING F.NON RETURN VALVE(RV-IN) DN40 | 1 |
| 4.3 | 2032631 | > NON-RETURN-DEVICE DN40 (MTR)TYP RV-IN | 1 |
| 3.6 | 2032628 | > O-RING ID.56,52X5,33N DIN3771 E7502 | 1 |
| 5 | 2032642 | DIAPHREM TANK 8L/PN16 DIN4807/T5 KIT | 1 |
| 5.1 | 2045914 | > DIAPHREM TANK 8L TYP-DD 16BAR | 1 |
| 5.2 | 2027853 | > FLOW FITTING G3/4 FOR DIAPHRAGM VES. | 1 |
| 6 | 4197076 | PRESSURE SENSOR/ GAUGE 0-16BAR KIT | 1 |
| 6.1 | 2085909 | > PRESS.SENSOR 1/4" 0-16BAR 4-20MA VP. | 1 |
| 6.2 | 4197077 | > T-PIECE 1/4" VP. | 1 |
| 6.3 | 2028692 | > PRESSURE GAUGE NG63-PN16-G1/4 | 1 |

| Item | Article no. | Description | Quantity |
|---|---|---|---|
| 6.4 | 2028291 | > BALL TAP R1/4" PN42 GIACOMINI R254DL | 1 |
| 6.5 | 2028691 | > BLOWGUN 1/4" MS 30BAR VP. | 1 |
| 7 | 4197129 | PIPE DE4 R3''-4x11/2"+2x1/4x1200 VP. | 1 |
| 8 | 4197130 | PIPE DE4 R3''-4x11/2"+2x1/4+1x3/4x1200 | 1 |
| 9 | | W-CTRL-SCE-B-4x4,0KW-T4-FM-ND2 | 1 |
| Note: TO / BIS / JUSQU'AU 18/05/2014 | | | |
| 9 | 2541907 | W-CTRL-SCE-B-4x13A-T34-FM-ND2-AVC-PKG | 1 |
| Note: FROM / AB / À PARTIR DU 19/05/2014 | | | |
| 10 | 4197079 | PLUG G1/4"x10 AISI304 KIT | 1 |
| 11 | 2032654 | PLUG R3/4" MS VIEGA 1751 | 1 |
| 20 | | ASSEMBLY WMS. DE-EB. +VP | 1 |
| 20.1 | 2028652 | > PRESSURE SWITCH PS3-ASR 1/(1,3) VP. | 1 |
| 20.2 | 2130983 | > PLUG PS3-415 WITH KABEL 1,5M 2NO VP. | 1 |
| 20.4 | 2028290 | > CROSSPIECE R1/4" MS-NICKEL | 1 |
| 20.5 | 2028687 | > PRESSURE GAUGE NG63 R1/4" HI.0-6BAR | 1 |
| 20.6 | 2054268 | > DUAL NIPPLE G1/4" x G1/4" MS VP. | 1 |
| 20.7 | 2028691 | > BLOWGUN 1/4" MS 30BAR VP. | 1 |
| 20.8 | 2028291 | > BALL TAP R1/4" PN42 GIACOMINI R254DL | 1 |

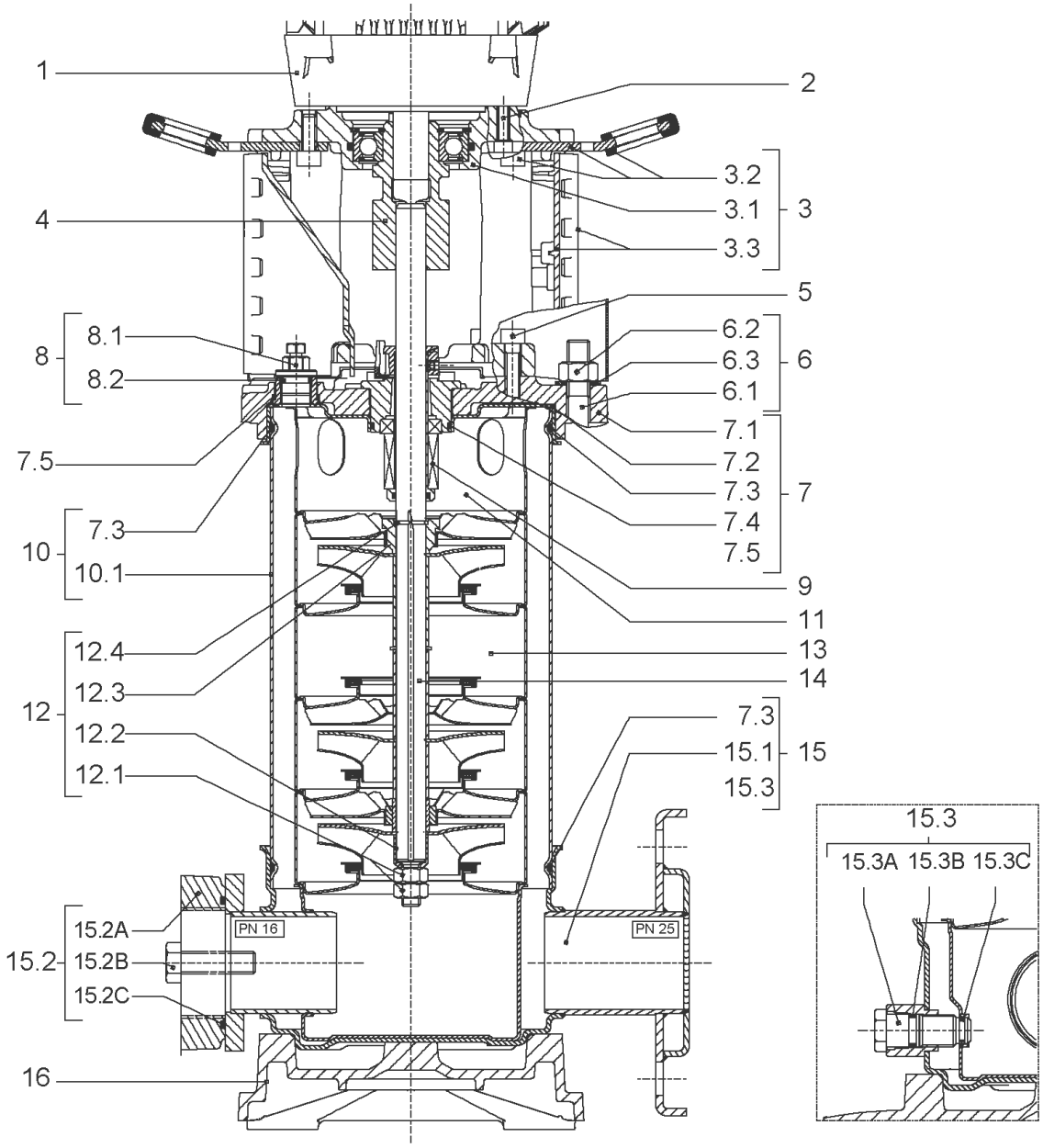
1
2
3.2
3.1
3
3.3
4
5
8.1
8
8.2
6.2
6.3
6
6.1
7.1
7.5
7.2
7.3
7
7.4
7.3
10
7.5
10.1
9
11
12.4
13
12.3
14
12
12.2
7.3
15.1
15
12.1
15.3
15.3
15.3A 15.3B 15.3C
15.2A
PN 16
PN 25
15.2
15.2B
15.2C
16

| Item | Article no. | Description | Quantity |
|---|---|---|---|
| 1 | | DRIVE HELIX-VE1005IE2-WE KIT | 1 |
| Note: MOTOR BRAND WILO ELEC | | | |
| 1 | | DRIVE HELIX-VE1005-IE4-WE-KIT | 1 |
| Note: MOTOR BRAND WILO ELEC | | | |
| 2 | 4206025 | SCREW M8X45 (4 PIECES) | 1 |
| 3 | 4172789 | LANTERN FT130 HELIX V10 KIT | 1 |
| 3.1 | | > M+5_6_LANTERN_ONE-PIECE_FT130_CATA | 1 |
| 3.2 | 2127604 | > EYELET CPL.FT HELIX(2 PIECES) | 1 |
| 3.3 | 4159692 | > COUPLING PROTECTOR FT HELIX KIT | 1 |
| 4 | 4159710 | COUPLING D.16XD.28 FT130 HELIX KIT | 1 |
| 5 | 4159707 | SCREW M8X30 (4 PIECES) | 1 |
| 6 | 2018576 | STUD BOLT M12X377 KIT | 1 |
| 6.1 | | > TIE BOLT M12-377x18x30-1.4057 | 1 |
| 6.2 | 2094647 | > NUT M12 M12 ISO4032 VP. | 1 |
| 6.3 | 2123557 | > WASHER CS-12.4-24-1.6-NFE25 (4 PIECES) | 1 |
| 7 | 4210143 | STATIONARY RING HOLDER HELIX 6" EPDM | 1 |
| 7.2 | 2127607 | > STATIONARY RING HOLDER 6" HELIX 1.4301 V | 1 |
| 7.3 | 4176513 | > O-RING FOR PUMP JACKET VP. | 1 |
| 7.4 | 2127603 | > O-RING ID.37,6x2,4 EPDM VP. | 1 |
| 7.5 | 2127602 | > O-RING ID.21,35x2 EPDM VP. | 1 |
| 8 | 4159686 | FILING/PURGING PLUG HELIX EPDM KIT | 1 |
| 9 | 4171327 | SEAL-KIT-HELIX6-10-16 O/E KIT | 1 |
| 10 | 4176518 | HOUSING PIPES D.152X247 1.4301 KIT | 1 |
| 7.3 | 4176513 | > O-RING FOR PUMP JACKET VP. | 1 |
| 10.1 | | > HOUSING-PIPE Ø152-M+1005-304 | 1 |
| 11 | 4172791 | CENTERING STAGE-RETURN HELIX10 1.4301VP. | 1 |
| 12 | 4209273 | SHAFT EQUIPMENT HELIX V10 KIT | 1 |
| 12.1 | | > NUT-H-M10-A4.70 | 1 |
| 12.2 | | > SERRATED LOCK WASHER M+10M3-316L | 1 |
| 12.3 | | > IMPELLER STOP RING L33,6-304 | 1 |
| 12.4 | | > STOP-RUSH-1/2-D16xd2-M+316 | 1 |
| 13 | | HYDRAULIC HELIX V 1005 1.4307 | 1 |
| 14 | 4176515 | SHAFT D.16 X367,5 1. 4301 VP. | 1 |
| 15 | 4159682 | PUMP HOUSING HELIX DN50 PN16 1.4301 KIT | 1 |

| Item | Article no. | Description | Quantity |
|---|---|---|---|
| 7.3 | 4176513 | > O-RING FOR PUMP JACKET VP. | 1 |
| 15.1 | | > BLASTING PPE HOUSING V-PN16-DN50-304 | 1 |
| 15.2 | 4217893 | > COUNTER FLANGE-G1"1/2-PN16-GJL KIT | 1 |
| 15.3 | 4171321 | > PRIMING/DRAIN PLUG EPDM HELIX KIT | 1 |
| 16 | 4176517 | BASEPLATE V8/10 VP. | 1 |

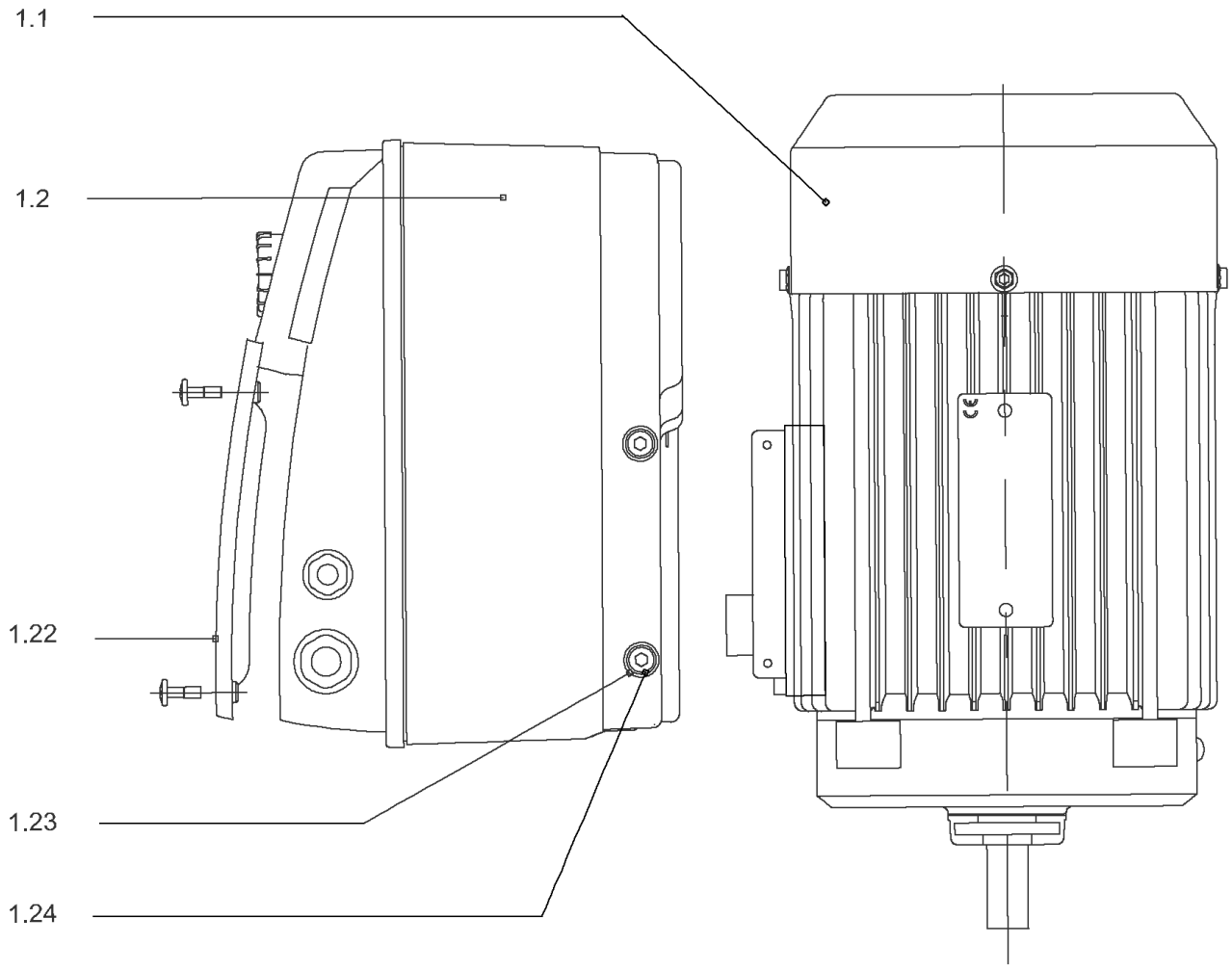
1.1
1.2
1.22
1.23
1.24

## DRIVE HELIX-VE1005IE2-WE KIT

| Item | Article no. | Description | Quantity |
|---|---|---|---|
| 1.1 | | M3-T638P55V18H-100F13-SU-N28-WE-IE2 VP. | 1 |
| Note: no longer available/nicht mehrlieferbar/n'est plus disponible | | | |
| | | SPARE PARTS MOTOR:ON REQUEST | 1 |
| 1.2 | 4190202 | MODULE HELIX-VE1005-IE2-WE KIT | 1 |
| 1.22 | 2054227 | > MODULE COVER/GASKET TL3/4 KIT | 1 |
| 1.23 | 4215716 | > SCREW M5X16 DIN912 8.8 A2A (4pieces) VP. | 1 |
| 1.24 | 2057978 | > RONDELLE A5,3 DIN6797 FST ZN (4 PIECES) | 1 |

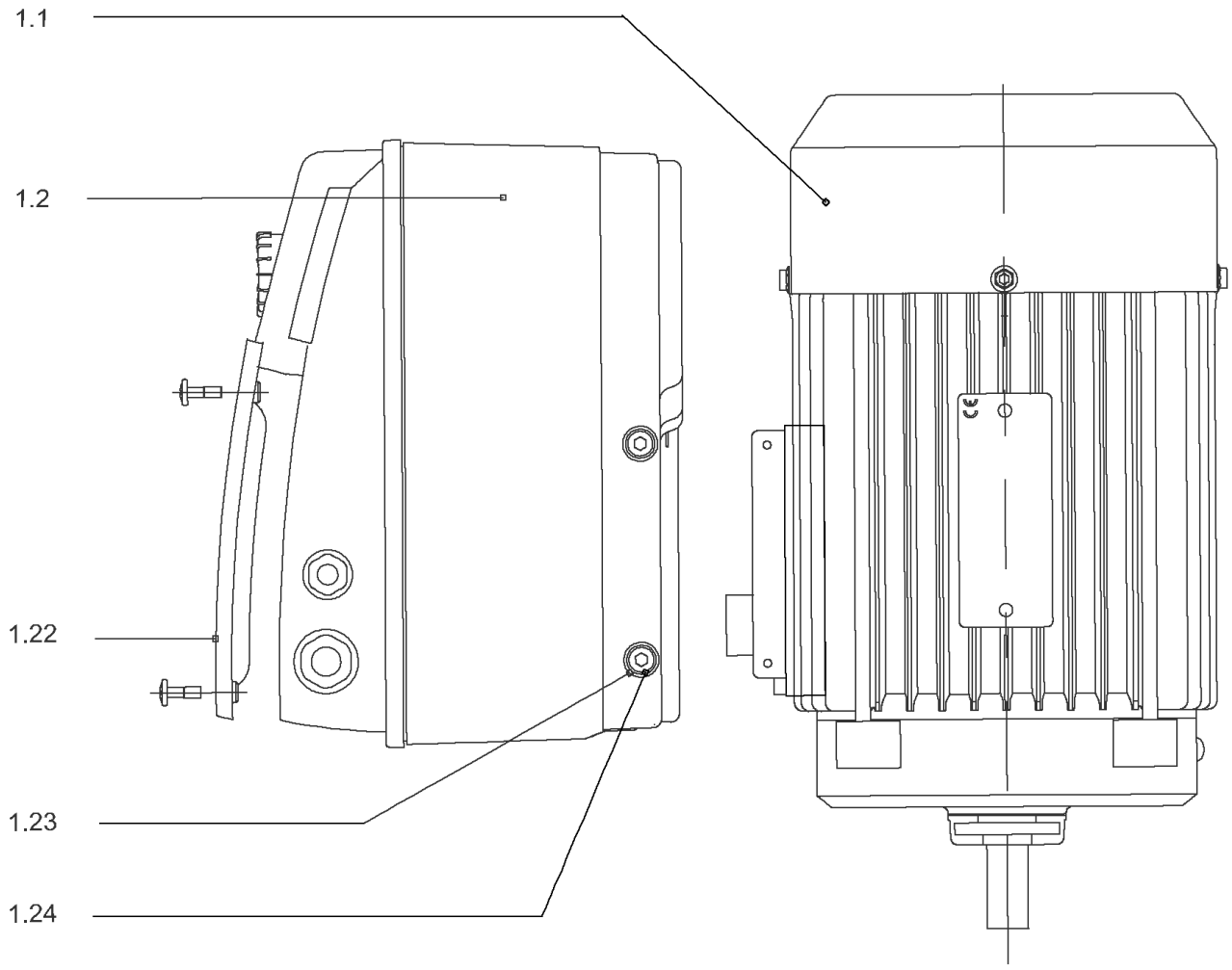
1.1
1.2
1.22
1.23
1.24

## DRIVE HELIX-VE1005-IE4-WE-KIT

| Item | Article no. | Description | Quantity |
|---|---|---|---|
| 1.1 | 4207922 | MOTOR 3/2/100 3~ 380V 60HZ IE4 WE VP. | 1 |
| | | SPARE PARTS MOTOR:ON REQUEST | 1 |
| 1.2 | 4209339 | MODULE HELIX-VE1005-IE4-WE KIT | 1 |
| 1.22 | 2054227 | > MODULE COVER/GASKET TL3/4 KIT | 1 |
| 1.23 | 4215716 | > SCREW M5X16 DIN912 8.8 A2A (4pieces) VP. | 1 |
| 1.24 | 2057978 | > RONDELLE A5,3 DIN6797 FST ZN (4 PIECES) | 1 |

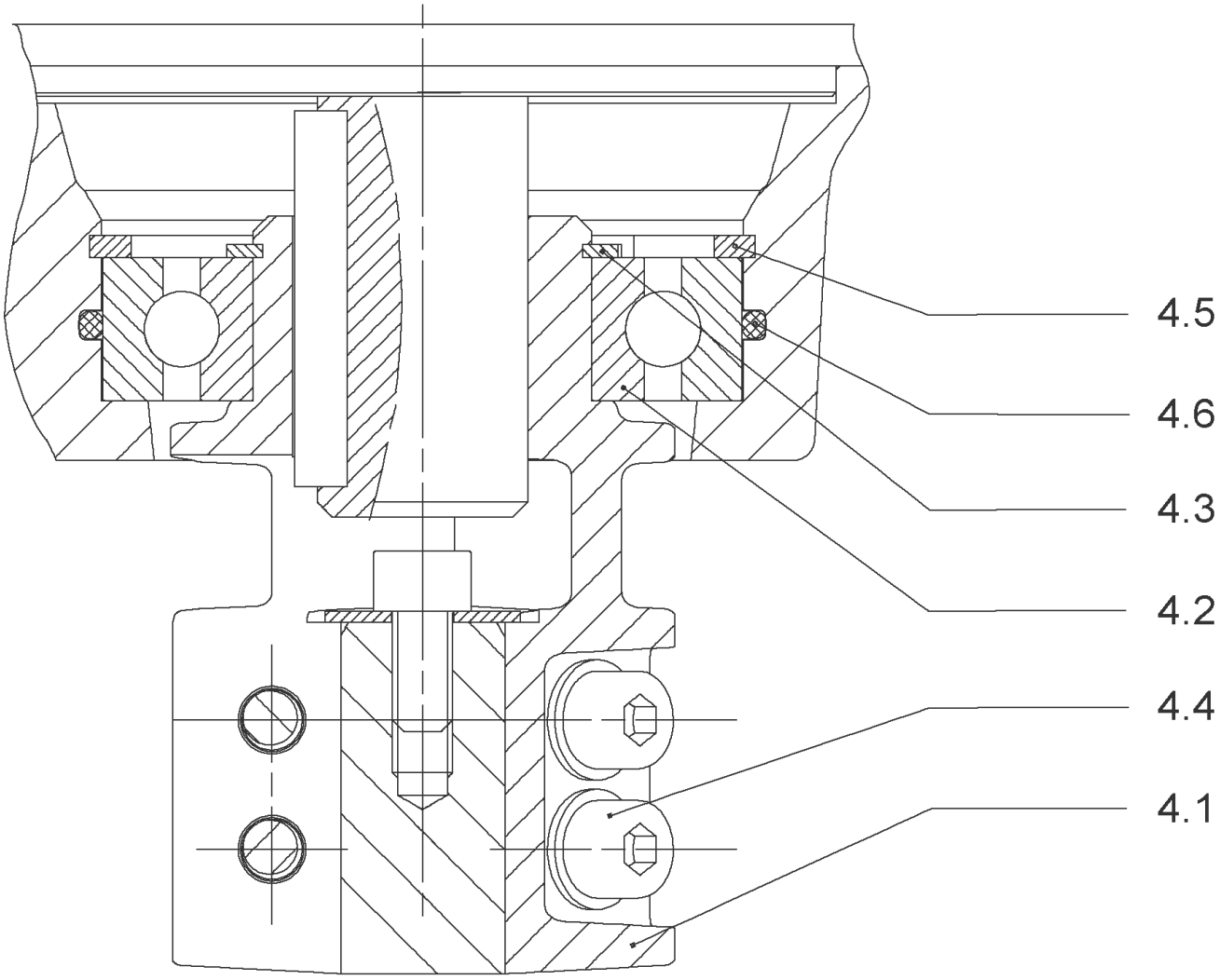
4.5
4.6
4.3
4.2
4.4
4.1

## COUPLING D.16XD.28 FT130 HELIX KIT (4159710)

| Item | Article no. | Description | Quantity |
|---|---|---|---|
| 4.1 | | COUPLING M+ Ø16XØ28 FT130 MACHINED | 1 |
| 4.2 | 2131022 | BALL BEARING 6209/ZZ-C3(HT)VP. | 1 |
| 4.3 | 4233930 | CIRCLIP-FOR-BORES-D45x1,75 VP. | 1 |
| 4.4 | 4157726 | SCREW KIT M8X30 (4 PIECES) | 1 |
| 4.5 | 4234252 | CIRCLIPS 85X3 VP. | 1 |
| 4.6 | 4234243 | O-RING 85X3 VP. | 1 |
| | | NOMEL CONTACT WASHER 8x16x1,4 STEEL ZC | 1 |

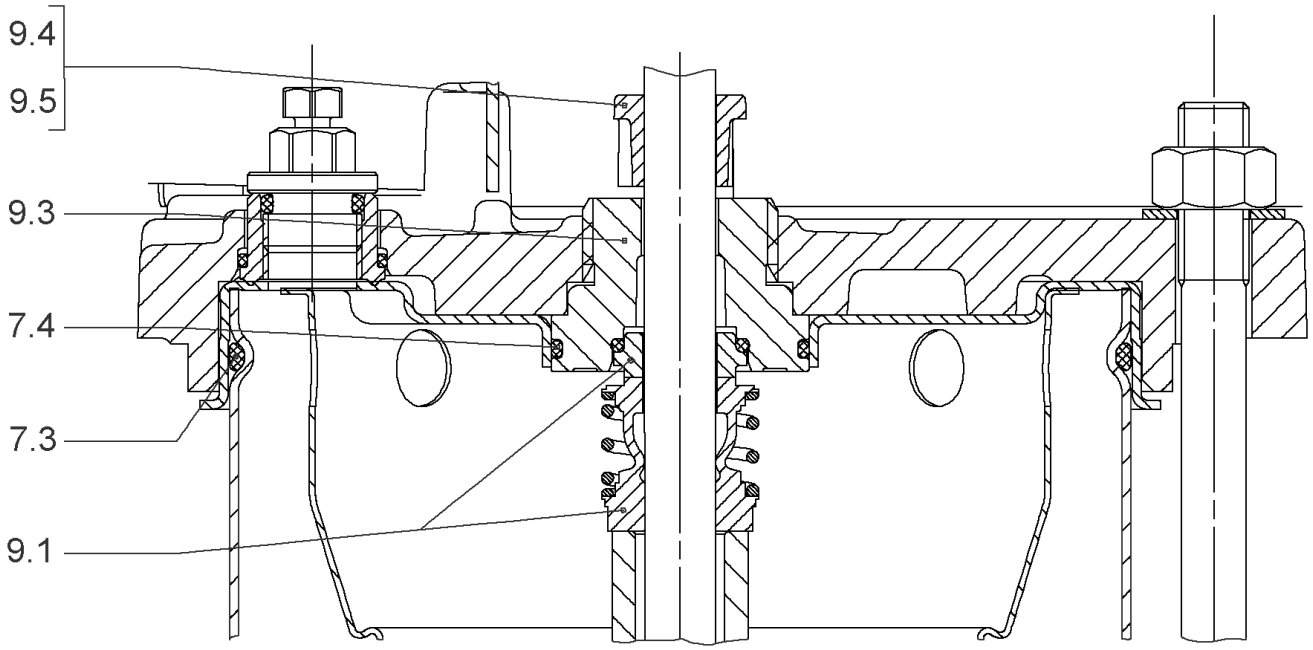
9.4
9.5
9.3
7.4
7.3
9.1

## SEAL-KIT-HELIX6-10-16 O/E KIT (4171327)

| Item | Article no. | Description | Quantity |
|---|---|---|---|
| 7.3 | 4176513 | O-RING FOR PUMP JACKET VP. | 1 |
| 7.4 | 2127603 | O-RING ID.37,6x2,4 EPDM VP. | 1 |
| 9.1 | 4177801 | MECH.SEAL HELIX6-10-16 O/E VP. | 1 |
| 9.3 | 4177798 | MACHINED RING HOLDER M+6" Ø16 304 VP. | 1 |
| 9.5 | 4177799 | MACHINED DRIVE RING Ø16 VP. | 1 |
| 9.4 | 4176520 | SCREW CH M5x5 A4-70 ( 3PIECES ) | 1 |

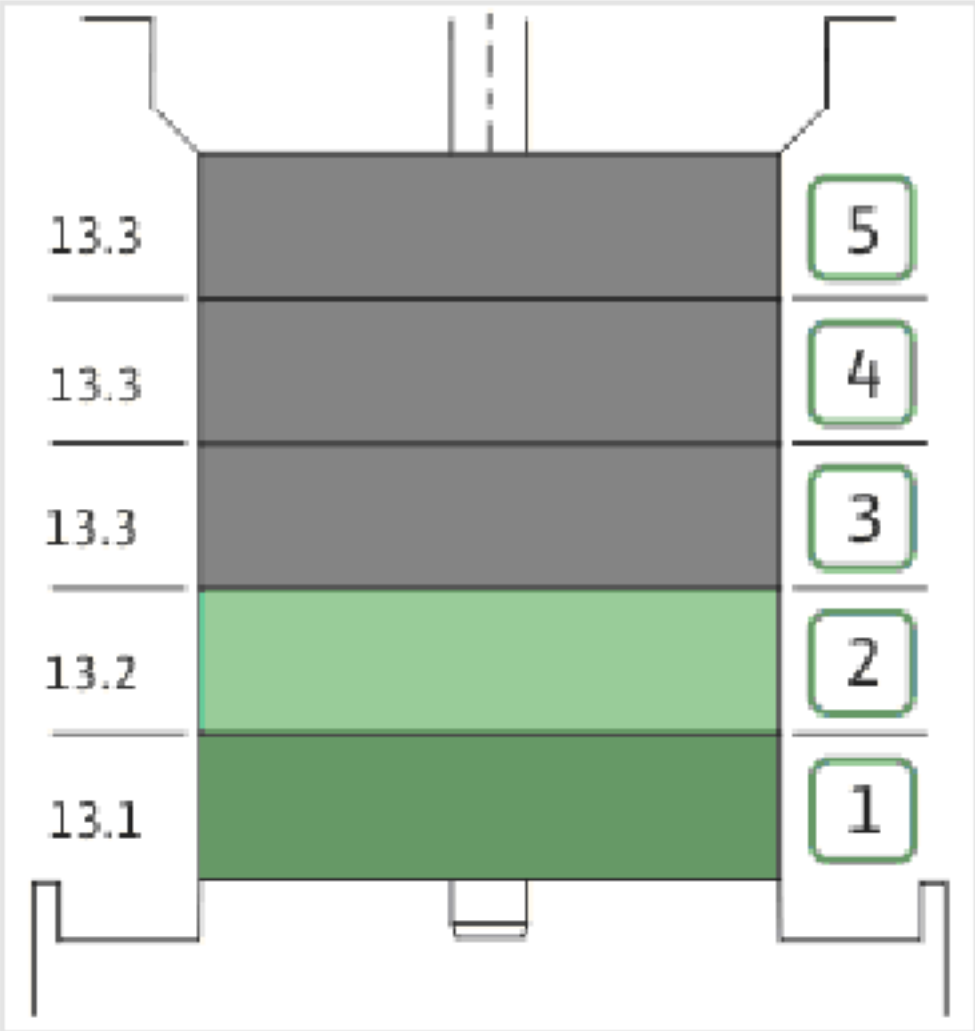
13.3
13.3
13.3
13.2
13.1
5
4
3
2
1

| Item | Article no. | Description | Quantity |
|---|---|---|---|
| 13.1 | 4171331 | STAGE HELIX10 1.4301KIT | 1 |
| | | > MACH.STG-CASING-WOGV-WNR-M+10-304 | 1 |
| | | > IMPELLER-M+10-304 | 1 |
| 13.2 | 4172792 | INTERMEDIATE STAGE HELIX 10 1.4301 KIT | 1 |
| | | > MACH.BEARING-STG-CASING-WNR-M+10-304 | 1 |
| | | > IMPELLER-M+10-304 | 1 |
| | | > SHAFT SLEEVE-SPACER-Ø19,35x18,465-304 | 1 |
| | | > SHAFT-SLEEVE-D16xD20x18-CW | 1 |
| 13.3 | 4172793 | INTERMEDIATE STAGE HELIX 10 1.4301 KIT | 1 |
| | | > MACH.STD-STG-CASING-WGV+NR-M+10-304 | 1 |
| | | > IMPELLER-M+10-304 | 1 |
| | | > IMPELLER SPACER Ø16,05X19,45-L36,465-304 | 1 |

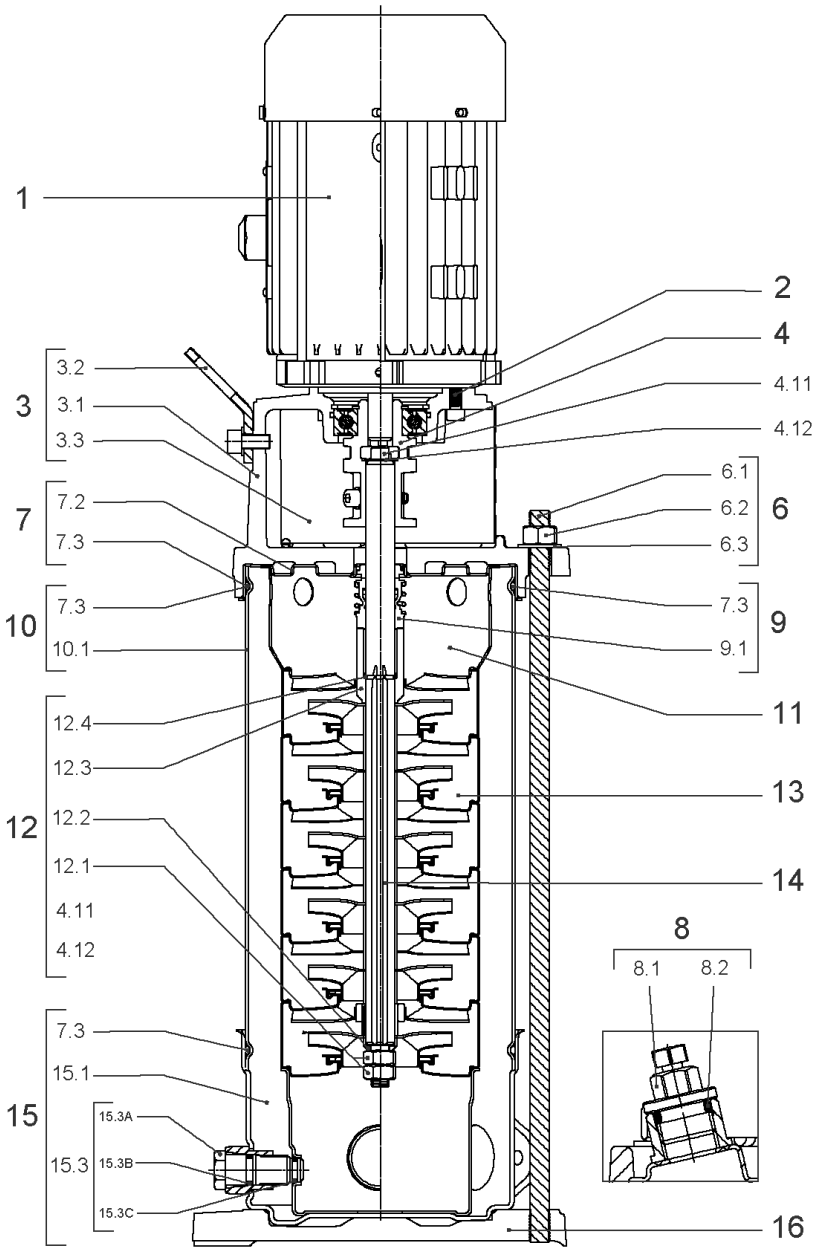
1
2
4
4.11
4.12
3
3.2
3.1
3.3
7
7.2
7.3
6
6.1
6.2
6.3
10
7.3
10.1
9
7.3
9.1
11
12
12.4
12.3
12.2
12.1
4.11
4.12
13
14
8
8.1
8.2
15
7.3
15.1
15.3
15.3A
15.3B
15.3C
16

## HELIX VE1005-1/16/E/S (4201553)

| Item | Article no. | Description | Quantity |
|---|---|---|---|
| 1 | | DRIVE HELIX-VE1005-IE4-WE-KIT | 1 |
| Note: MOTOR BRAND WILO ELEC | | | |
| | | SPARE PARTS MOTOR:ON REQUEST | 1 |
| 2 | 4159707 | SCREW M8X30 (4 PIECES) | 1 |
| 3 | 4214473 | LANTERN FT130 HELIX KIT | 1 |
| 3.1 | | > LANT-MOT-VMI-ReDTC6"-FT130-MACHINED+CATA | 1 |
| 3.2 | 4184852 | > EYELET CPL.FT HELIX (2 PIECES) | 1 |
| 3.3 | 4213782 | > COUPLING PROTECTOR FT115/130 HELIX KIT | 1 |
| 4 | 4159710 | COUPLING D.16XD.28 FT130 HELIX KIT | 1 |
| 6 | 2018576 | STUD BOLT M12X377 KIT | 1 |
| 6.1 | | > TIE BOLT M12-377x18x30-1.4057 | 1 |
| 6.2 | 2094647 | > NUT M12 M12 ISO4032 VP. | 1 |
| 6.3 | 2123557 | > WASHER CS-12.4-24-1.6-NFE25 (4 PIECES) | 1 |
| 7 | 4214481 | STATIONARY RING HOLDER HELIX D27 ReDTC | 1 |
| 7.2 | 4214479 | > STATIONARY RING HOLDER HELIX D27 VP. | 1 |
| 7.3 | 4176513 | > O-RING FOR PUMP JACKET VP. | 1 |
| 8 | 4212724 | FILING/PURGING PLUG HELIX ReDTC KIT | 1 |
| 8.1 | | > FILLING PLUG MVI6"-304 | 1 |
| 8.2 | 4177800 | > O-RING EPDM PLUG HELIX VP. | 1 |
| 9 | 4214483 | MECH.SEAL HELIX6-10-16 O/E ReDTC KIT | 1 |
| 9.1 | 4177801 | > MECH.SEAL HELIX6-10-16 O/E VP. | 1 |
| 7.3 | 4176513 | > O-RING FOR PUMP JACKET VP. | 1 |
| 10 | 4176518 | HOUSING PIPES D.152X247 1.4301 KIT | 1 |
| 7.3 | 4176513 | > O-RING FOR PUMP JACKET VP. | 1 |
| 10.1 | | > HOUSING-PIPE Ø152-M+1005-304 | 1 |
| 11 | 4172791 | CENTERING STAGE-RETURN HELIX10 1.4301VP. | 1 |
| 12 | 4214517 | SHAFT EQUIPMENT HELIX V10 ReDTC KIT | 1 |
| 12.1 | | > NUT-H-M10-A4.70 | 1 |
| 12.2 | | > SERRATED LOCK WASHER M+10M3-316L | 1 |
| 12.3 | | > 1/2-SNAP-RING-6/10M3-316L | 1 |
| 12.4 | | > STOP-RUSH-1/2-D16xd2-M+316 | 1 |
| 4.11 | | > SCREW CHC-M6X14-8.8-ISO4762-GEOMET500A | 1 |
| 4.12 | | > WASHER D.24 L6U ZINK | 1 |
| 13 | | HYDRAULIC HELIX V 1005 1.4307 | 1 |

| Item | Article no. | Description | Quantity |
|---|---|---|---|
| 14 | 4214498 | SHAFT D.16X316 HELIX 1.4057 VP. | 1 |
| 15 | 4159682 | PUMP HOUSING HELIX DN50 PN16 1.4301 KIT | 1 |
| 7.3 | 4176513 | > O-RING FOR PUMP JACKET VP. | 1 |
| 15.1 | | > BLASTING PPE HOUSING V-PN16-DN50-304 | 1 |
| 15.2 | 4217893 | > COUNTER FLANGE-G1"1/2-PN16-GJL KIT | 1 |
| 15.3 | 4171321 | > PRIMING/DRAIN PLUG EPDM HELIX KIT | 1 |
| 16 | 4176517 | BASEPLATE V8/10 VP. | 1 |

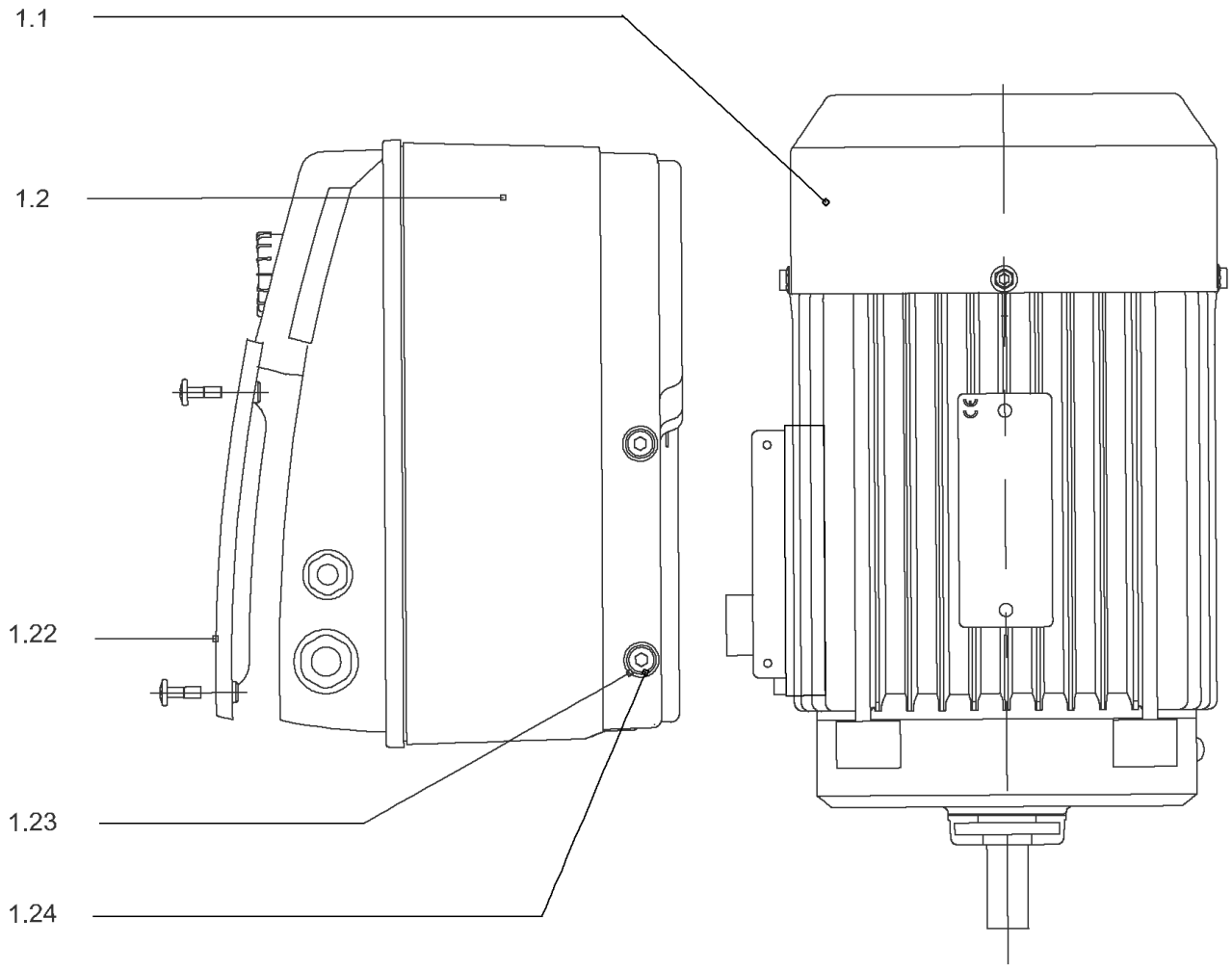
1.1
1.2
1.22
1.23
1.24

## DRIVE HELIX-VE1005-IE4-WE-KIT

| Item | Article no. | Description | Quantity |
|---|---|---|---|
| 1.1 | 4207922 | MOTOR 3/2/100 3~ 380V 60HZ IE4 WE VP. | 1 |
| | | SPARE PARTS MOTOR:ON REQUEST | 1 |
| 1.2 | 4209339 | MODULE HELIX-VE1005-IE4-WE KIT | 1 |
| 1.22 | 2054227 | > MODULE COVER/GASKET TL3/4 KIT | 1 |
| 1.23 | 4215716 | > SCREW M5X16 DIN912 8.8 A2A (4pieces) VP. | 1 |
| 1.24 | 2057978 | > RONDELLE A5,3 DIN6797 FST ZN (4 PIECES) | 1 |

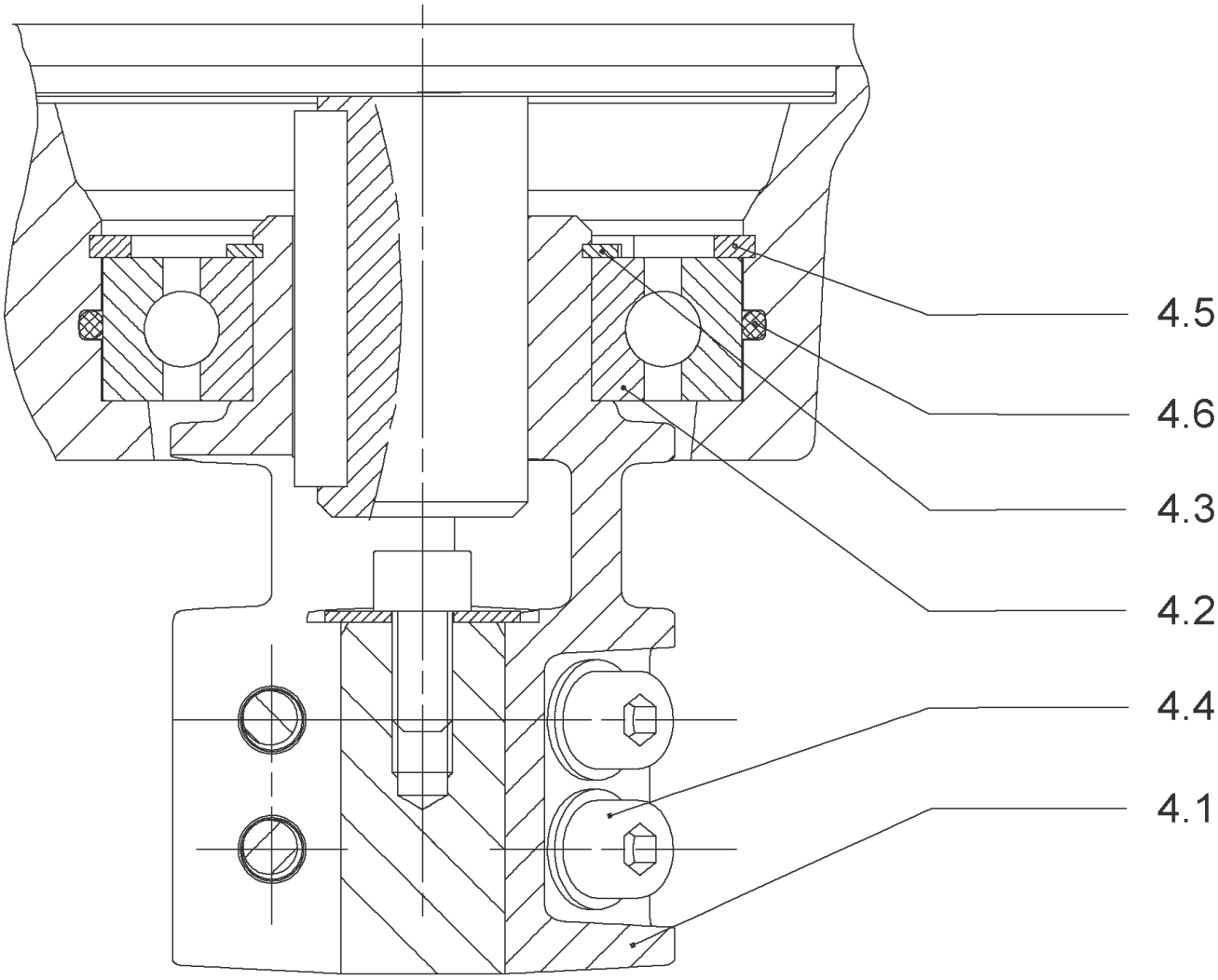
4.5
4.6
4.3
4.2
4.4
4.1

## COUPLING D.16XD.28 FT130 HELIX KIT (4159710)

| Item | Article no. | Description | Quantity |
|---|---|---|---|
| 4.1 | | COUPLING M+ Ø16XØ28 FT130 MACHINED | 1 |
| 4.2 | 2131022 | BALL BEARING 6209/ZZ-C3(HT)VP. | 1 |
| 4.3 | 4233930 | CIRCLIP-FOR-BORES-D45x1,75 VP. | 1 |
| 4.4 | 4157726 | SCREW KIT M8X30 (4 PIECES) | 1 |
| 4.5 | 4234252 | CIRCLIPS 85X3 VP. | 1 |
| 4.6 | 4234243 | O-RING 85X3 VP. | 1 |
| | | NOMEL CONTACT WASHER 8x16x1,4 STEEL ZC | 1 |

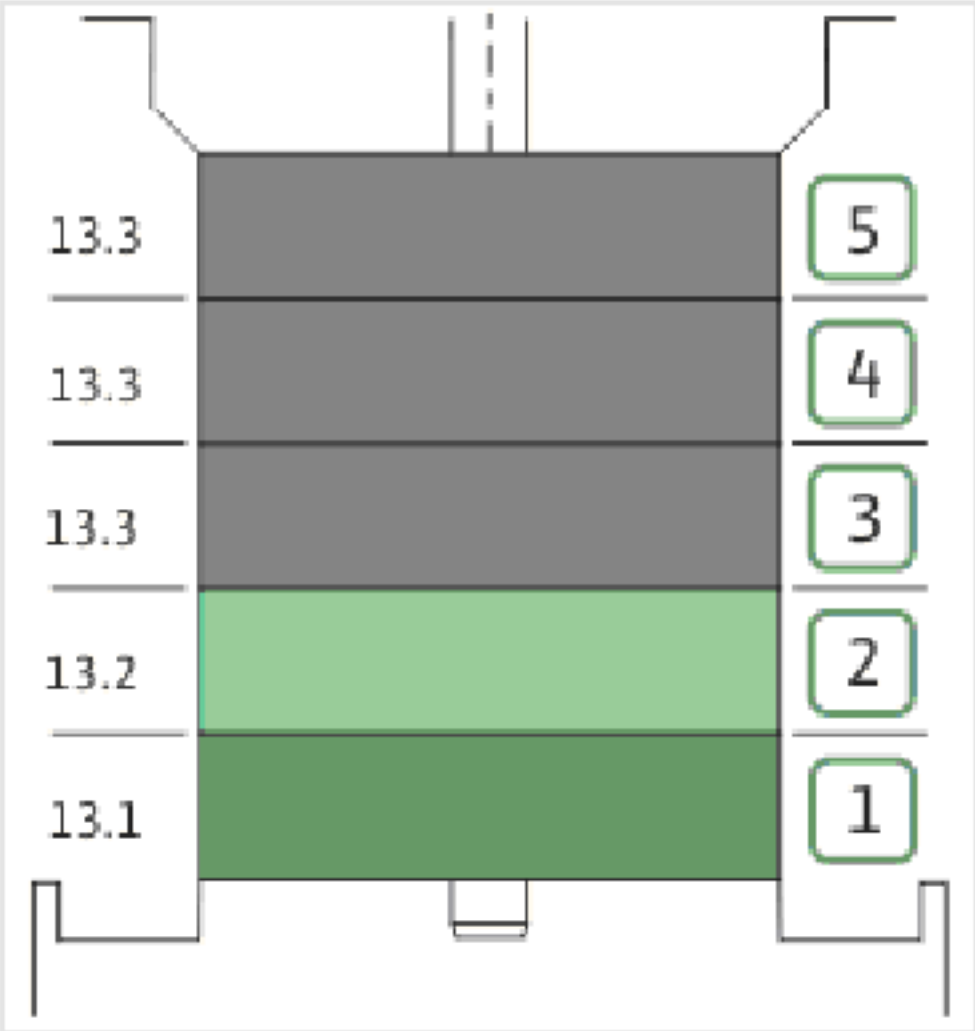
13.3
13.3
13.3
13.2
13.1
5
4
3
2
1

| Item | Article no. | Description | Quantity |
|---|---|---|---|
| 13.1 | 4171331 | STAGE HELIX10 1.4301KIT | 1 |
| | | > MACH.STG-CASING-WOGV-WNR-M+10-304 | 1 |
| | | > IMPELLER-M+10-304 | 1 |
| 13.2 | 4172792 | INTERMEDIATE STAGE HELIX 10 1.4301 KIT | 1 |
| | | > MACH.BEARING-STG-CASING-WNR-M+10-304 | 1 |
| | | > IMPELLER-M+10-304 | 1 |
| | | > SHAFT SLEEVE-SPACER-Ø19,35x18,465-304 | 1 |
| | | > SHAFT-SLEEVE-D16xD20x18-CW | 1 |
| 13.3 | 4172793 | INTERMEDIATE STAGE HELIX 10 1.4301 KIT | 1 |
| | | > MACH.STD-STG-CASING-WGV+NR-M+10-304 | 1 |
| | | > IMPELLER-M+10-304 | 1 |
| | | > IMPELLER SPACER Ø16,05X19,45-L36,465-304 | 1 |

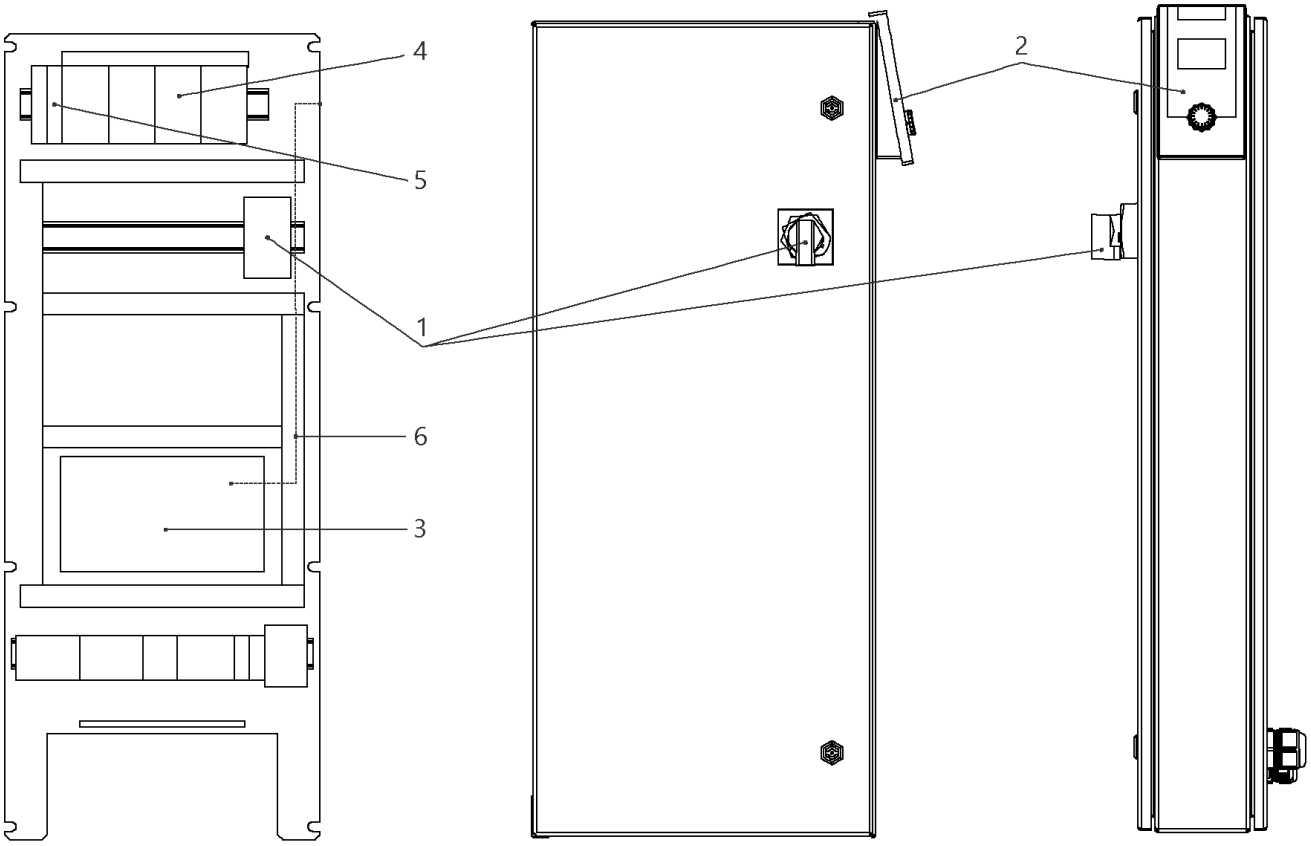
4
5
1
6
3
2

## W-CTRL-SCE-B-4x4,0KW-T4-FM-ND2

| Item | Article no. | Description | Quantity |
|---|---|---|---|
| 1 | 2104473 | MAIN SWITCH OT63F3 L105 KIT | 1 |
| 2 | 4184784 | CONTROL PANEL HMI SC KIT | 1 |
| 2 | 4185259 | ASSEMBLY DISPLAY SC PKG VP. | 1 |
| 3 | 4185257 | ASSEMBLY CPU SCe Booster VP. | 1 |
| 4 | 2051217 | AUTOM.CIRCUIT BREAKER S203 B16 TO7,5kW | 1 |
| 5 | 2046288 | CIRCUIT BREAKER S201 B16 | 1 |
| 6 | 4194956 | PATCH CABLE RJ45 CAT6 1,0M BLUE SC-PANEL | 1 |

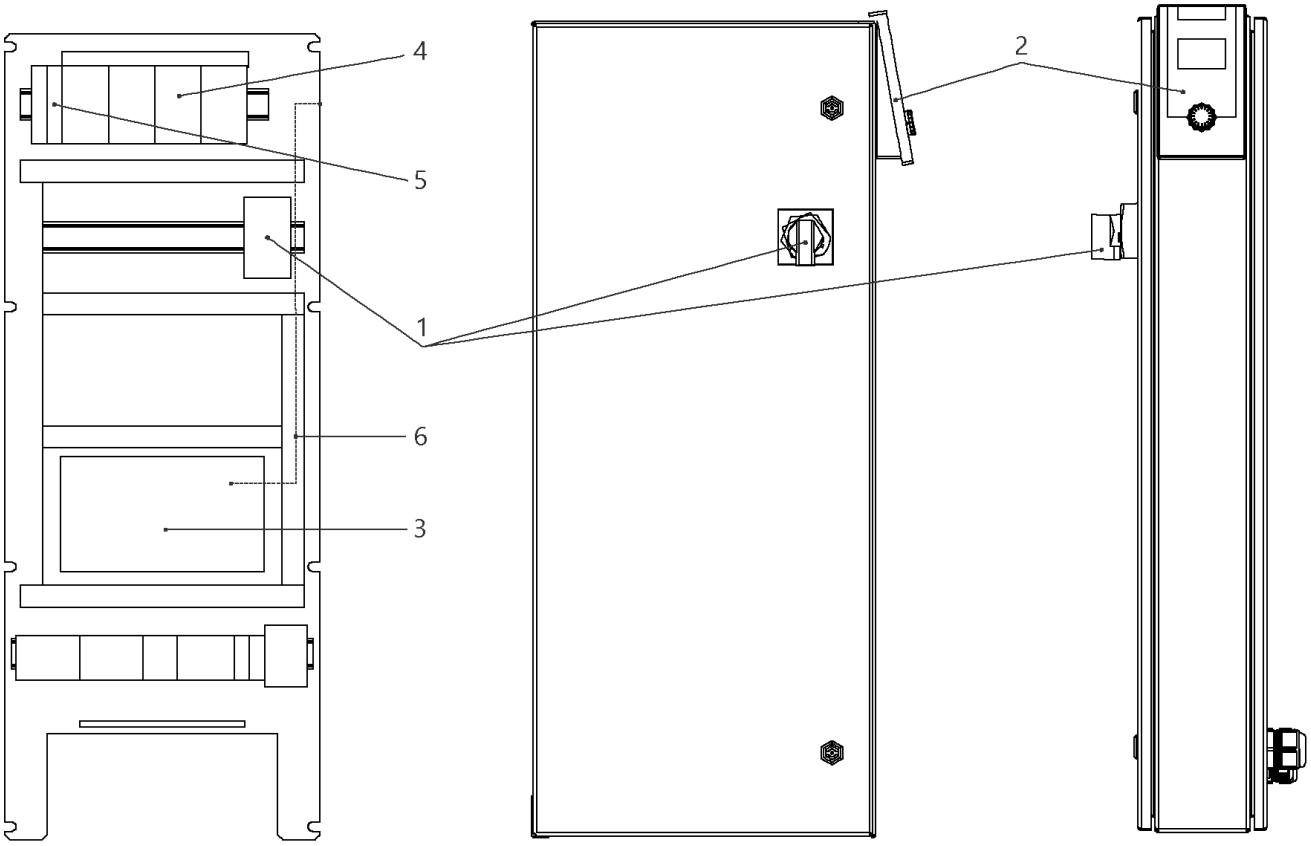
4
5
1
6
3
2

## W-CTRL-SCE-B-4x13A-T34-FM-ND2-AVC-PKG (2541907)

| Item | Article no. | Description | Quantity |
|---|---|---|---|
| 1 | 2104477 | MAIN SWITCH OT80F3 L105 KIT | 1 |
| Note: TO / BIS / JUSQU'AU 30/06/2015 | | | |
| 1 | 2104473 | MAIN SWITCH OT63F3 L105 KIT | 1 |
| Note: FROM / AB / À PARTIR DU 01/07/2015 | | | |
| 2 | 4184784 | CONTROL PANEL HMI SC KIT | 1 |
| 2 | 4185259 | ASSEMBLY DISPLAY SC PKG VP. | 1 |
| Note: DISPLAY ALONE / PLATINE SEULE | | | |
| 3 | 4185257 | ASSEMBLY CPU SCe Booster VP. | 1 |
| 5 | 2046288 | CIRCUIT BREAKER S201 B16 | 1 |
| 4 | 2051217 | AUTOM.CIRCUIT BREAKER S203 B16 TO7,5kW | 1 |
| 6 | 4194956 | PATCH CABLE RJ45 CAT6 1,0M BLUE SC-PANEL | 1 |

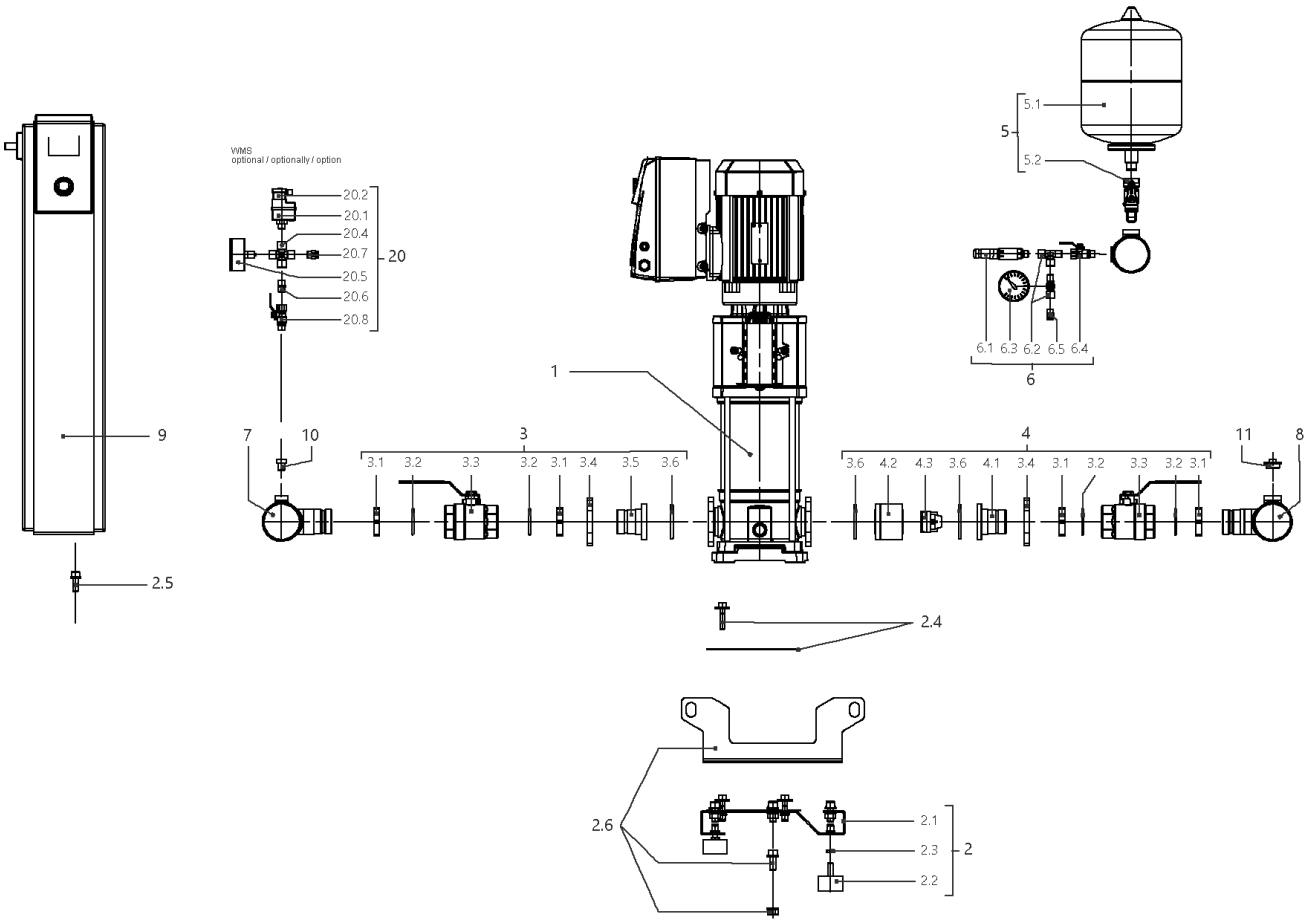
VVMS
optional / optionally / option
20.2
20.1
20.4
20.7
20.5
20.6
20.8
20
5.1
5
5.2
6.1 6.3 6.2 6.5 6.4
6
1
9
7
10
3
3.1 3.2 3.3 3.2 3.1 3.4 3.5 3.6
4
3.6 4.2 4.3 3.6 4.1 3.4 3.1 3.2 3.3 3.2 3.1
11
8
2.5
2.4
2.6
2.1
2.3
2.2
2

## SiBoost Smart 4HELIX VE1006 (2536355)

| Item | Article no. | Description | Quantity |
|---|---|---|---|
| 1 | | HELIX VE1006-1/16/E/S | 1 |
| Note: TO / BIS / JUSQU'AU 30/04/2016 | | | |
| 1 | 4201555 | HELIX VE1006-1/16/E/S | 1 |
| Note: FROM / AB / À PARTIR DU 01/05/2016 | | | |
| 2 | 4197134 | BASE PLATE DE4 1450x420 KIT | 1 |
| 2.1 | | > BASEPLATE_4x4/6/10/16V_E300_BOX_150 | 1 |
| 2.2 | 2028654 | > VIBRATION DAMPER D.50X30 M10X28 | 1 |
| 2.3 | 2028281 | > NUT M10 DIN936 (ISO4035) 17H VZ | 1 |
| 2.4 | 4197083 | > HOLDER PUMP Helix 10/16 KIT | 1 |
| 2.5 | 4197084 | > HOLDER SWITCHBOX WILO Smart Control KIT | 1 |
| 2.6 | 4197117 | > LIFTING Siboost HELIX SC KIT | 1 |
| 3 | 4197072 | SUCTION SIDE Siboost Helix10/16 KIT | 1 |
| 3.1 | 2032623 | > NUT G1 1/2"SW55 MS | 1 |
| 3.2 | 2032616 | > O-RING ID.44X3,53N DIN3771 E7502 | 1 |
| 3.2 | 2534877 | > BALL TAP KDW40-H G11/2I-I-DN40 DVGW | 1 |
| 3.4 | 2032626 | > OVAL FLANGE D52-LK100 ST-VZ | 1 |
| 3.5 | 2032627 | > UNION INSERT DN40 LAPPED FLANGE | 1 |
| 3.6 | 2032628 | > O-RING ID.56,52X5,33N DIN3771 E7502 | 1 |
| 4 | 4197074 | DELIVERY SIDE Siboost Helix V10 KIT | 1 |
| 3.1 | 2032623 | > NUT G1 1/2"SW55 MS | 1 |
| 3.2 | 2032616 | > O-RING ID.44X3,53N DIN3771 E7502 | 1 |
| 3.3 | 2534877 | > BALL TAP KDW40-H G11/2I-I-DN40 DVGW | 1 |
| 3.4 | 2032626 | > OVAL FLANGE D52-LK100 ST-VZ | 1 |
| 4.1 | 2054316 | > UNION INSERT DN40 LAPPED FLANGE(W.SLOT) | 1 |
| 4.2 | 2054317 | > HOUSING F.NON RETURN VALVE(RV-IN) DN40 | 1 |
| 4.3 | 2032631 | > NON-RETURN-DEVICE DN40 (MTR)TYP RV-IN | 1 |
| 3.6 | 2032628 | > O-RING ID.56,52X5,33N DIN3771 E7502 | 1 |
| 5 | 2032642 | DIAPHREM TANK 8L/PN16 DIN4807/T5 KIT | 1 |
| 5.1 | 2045914 | > DIAPHREM TANK 8L TYP-DD 16BAR | 1 |
| 5.2 | 2027853 | > FLOW FITTING G3/4 FOR DIAPHRAGM VES. | 1 |
| 6 | 4197076 | PRESSURE SENSOR/ GAUGE 0-16BAR KIT | 1 |
| 6.1 | 2085909 | > PRESS.SENSOR 1/4" 0-16BAR 4-20MA VP. | 1 |
| 6.2 | 4197077 | > T-PIECE 1/4" VP. | 1 |
| 6.3 | 2028692 | > PRESSURE GAUGE NG63-PN16-G1/4 | 1 |

| Item | Article no. | Description | Quantity |
|---|---|---|---|
| 6.4 | 2028291 | > BALL TAP R1/4" PN42 GIACOMINI R254DL | 1 |
| 6.5 | 2028691 | > BLOWGUN 1/4" MS 30BAR VP. | 1 |
| 7 | 4197129 | PIPE DE4 R3''-4x11/2"+2x1/4x1200 VP. | 1 |
| 8 | 4197130 | PIPE DE4 R3''-4x11/2"+2x1/4+1x3/4x1200 | 1 |
| 9 | | W-CTRL-SCE-B-4x4,0KW-T4-FM-ND2 | 1 |
| Note: TO / BIS / JUSQU'AU 18/05/2014 | | | |
| 9 | 2541907 | W-CTRL-SCE-B-4x13A-T34-FM-ND2-AVC-PKG | 1 |
| Note: FROM / AB / À PARTIR DU 19/05/2014 - TO / BIS / JUSQU'AU 16/10/2017 | | | |
| 9 | 2541903 | W-CTRL-SCE-B-4x10A-T34-FM-ND2-AVC-PKG | 1 |
| Note: FROM / AB / À PARTIR DU 17/10/2017 | | | |
| 10 | 4197079 | PLUG G1/4"x10 AISI304 KIT | 1 |
| 11 | 2032654 | PLUG R3/4" MS VIEGA 1751 | 1 |
| 20 | | ASSEMBLY WMS. DE-EB. +VP | 1 |
| 20.1 | 2028652 | > PRESSURE SWITCH PS3-ASR 1/(1,3) VP. | 1 |
| 20.2 | 2130983 | > PLUG PS3-415 WITH KABEL 1,5M 2NO VP. | 1 |
| 20.4 | 2028290 | > CROSSPIECE R1/4" MS-NICKEL | 1 |
| 20.5 | 2028687 | > PRESSURE GAUGE NG63 R1/4" HI.0-6BAR | 1 |
| 20.6 | 2054268 | > DUAL NIPPLE G1/4" x G1/4" MS VP. | 1 |
| 20.7 | 2028691 | > BLOWGUN 1/4" MS 30BAR VP. | 1 |
| 20.8 | 2028291 | > BALL TAP R1/4" PN42 GIACOMINI R254DL | 1 |

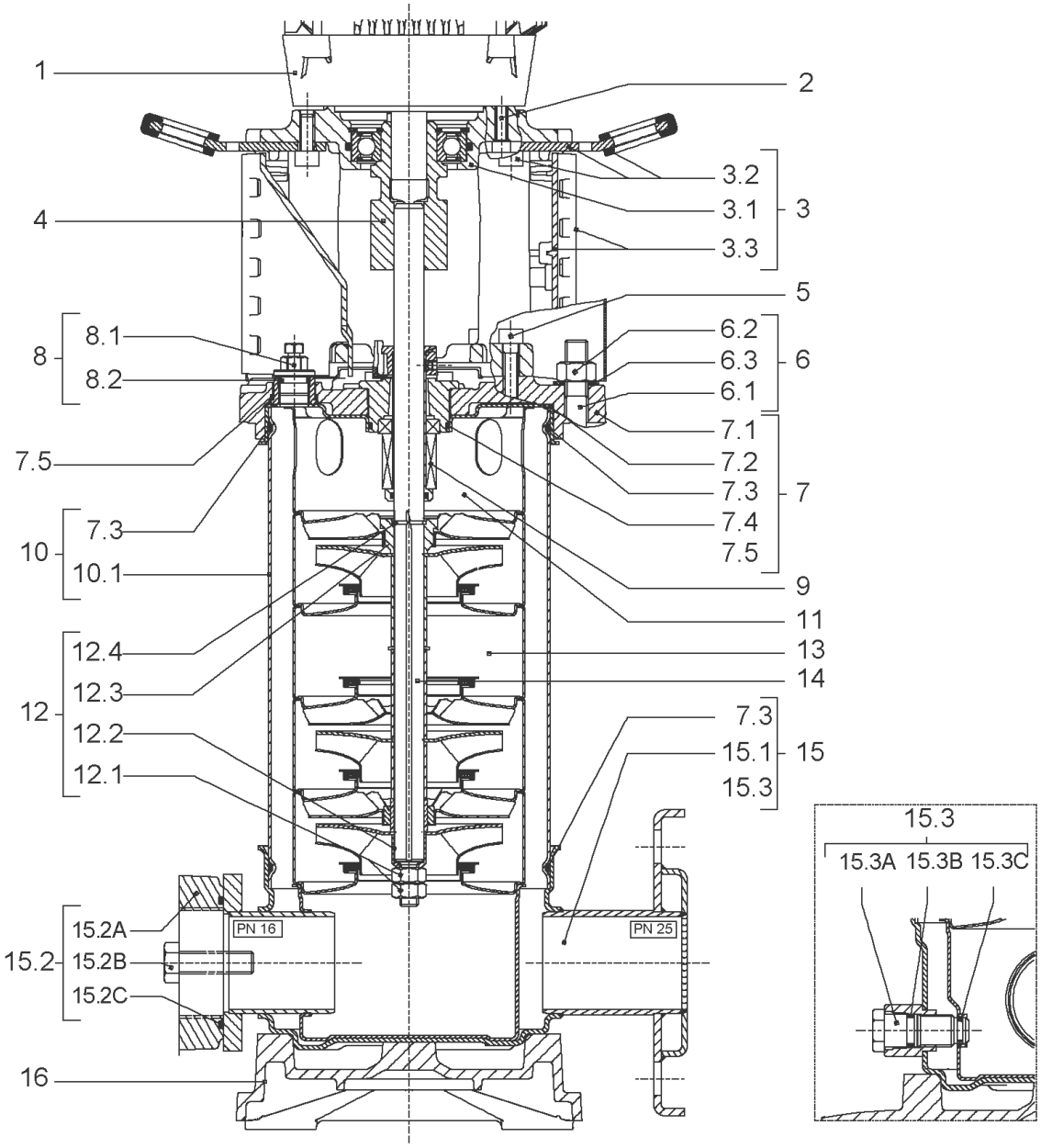
1
2
3.2
3.1
3
3.3
4
5
8.1
8
8.2
6.2
6.3
6
6.1
7.1
7.5
7.2
7.3
7
7.4
7.3
10
7.5
10.1
9
11
12.4
13
12.3
14
12
7.3
12.2
15.1
15
12.1
15.3
15.3
15.3A 15.3B 15.3C
15.2A
PN 16
PN 25
15.2
15.2B
15.2C
16

| Item | Article no. | Description | Quantity |
|---|---|---|---|
| 1 | | DRIVE HELIX-VE1006-IE2-ATB KIT | 1 |
| Note: MOTOR BRAND ATB | | | |
| 1 | | DRIVE HELIX-VE1006-IE2-WE KIT | 1 |
| Note: MOTOR BRAND WILO ELEC | | | |
| 1 | | DRIVE HELIX-VE1006-IE4-WE-KIT | 1 |
| Note: MOTOR BRAND WILO ELEC | | | |
| 2 | 4206025 | SCREW M8X45 (4 PIECES) | 1 |
| 3 | 4172789 | LANTERN FT130 HELIX V10 KIT | 1 |
| 3.1 | | > M+5_6_LANTERN_ONE-PIECE_FT130_CATA | 1 |
| 3.2 | 2127604 | > EYELET CPL.FT HELIX(2 PIECES) | 1 |
| 3.3 | 4159692 | > COUPLING PROTECTOR FT HELIX KIT | 1 |
| 4 | 4159710 | COUPLING D.16XD.28 FT130 HELIX KIT | 1 |
| 5 | 4159707 | SCREW M8X30 (4 PIECES) | 1 |
| 6 | 4177822 | STUD BOLT M12X413 KIT | 1 |
| 6.1 | | > TIE BOLT M12-413x18x30-1.4057 | 1 |
| 6.2 | 2094647 | > NUT M12 M12 ISO4032 VP. | 1 |
| 6.3 | 2123557 | > WASHER CS-12.4-24-1.6-NFE25 (4 PIECES) | 1 |
| 7 | 4210143 | STATIONARY RING HOLDER HELIX 6" EPDM | 1 |
| 7.2 | 2127607 | > STATIONARY RING HOLDER 6" HELIX 1.4301 V | 1 |
| 7.3 | 4176513 | > O-RING FOR PUMP JACKET VP. | 1 |
| 7.4 | 2127603 | > O-RING ID.37,6x2,4 EPDM VP. | 1 |
| 7.5 | 2127602 | > O-RING ID.21,35x2 EPDM VP. | 1 |
| 8 | 4159686 | FILING/PURGING PLUG HELIX EPDM KIT | 1 |
| 9 | 4171327 | SEAL-KIT-HELIX6-10-16 O/E KIT | 1 |
| 10 | 4177823 | HOUSING PIPES D.152X285 1.4301 KIT | 1 |
| 7.3 | 4176513 | > O-RING FOR PUMP JACKET VP. | 1 |
| 10.1 | | > HOUSING-PIPE Ø152-M+1006-304 | 1 |
| 11 | 4172791 | CENTERING STAGE-RETURN HELIX10 1.4301VP. | 1 |
| 12 | 4209273 | SHAFT EQUIPMENT HELIX V10 KIT | 1 |
| 12.1 | | > NUT-H-M10-A4.70 | 1 |
| 12.2 | | > SERRATED LOCK WASHER M+10M3-316L | 1 |
| 12.3 | | > IMPELLER STOP RING L33,6-304 | 1 |
| 12.4 | | > STOP-RUSH-1/2-D16xd2-M+316 | 1 |
| 13 | | HYDRAULIC HELIX V 1006 1.4307 | 1 |

| Item | Article no. | Description | Quantity |
|---|---|---|---|
| 14 | 4177825 | SHAFT D.16X405 1.4301 VP. | 1 |
| 15 | 4159682 | PUMP HOUSING HELIX DN50 PN16 1.4301 KIT | 1 |
| 7.3 | 4176513 | > O-RING FOR PUMP JACKET VP. | 1 |
| 15.1 | | > BLASTING PPE HOUSING V-PN16-DN50-304 | 1 |
| 15.2 | 4217893 | > COUNTER FLANGE-G1"1/2-PN16-GJL KIT | 1 |
| 15.3 | 4171321 | > PRIMING/DRAIN PLUG EPDM HELIX KIT | 1 |
| 16 | 4176517 | BASEPLATE V8/10 VP. | 1 |

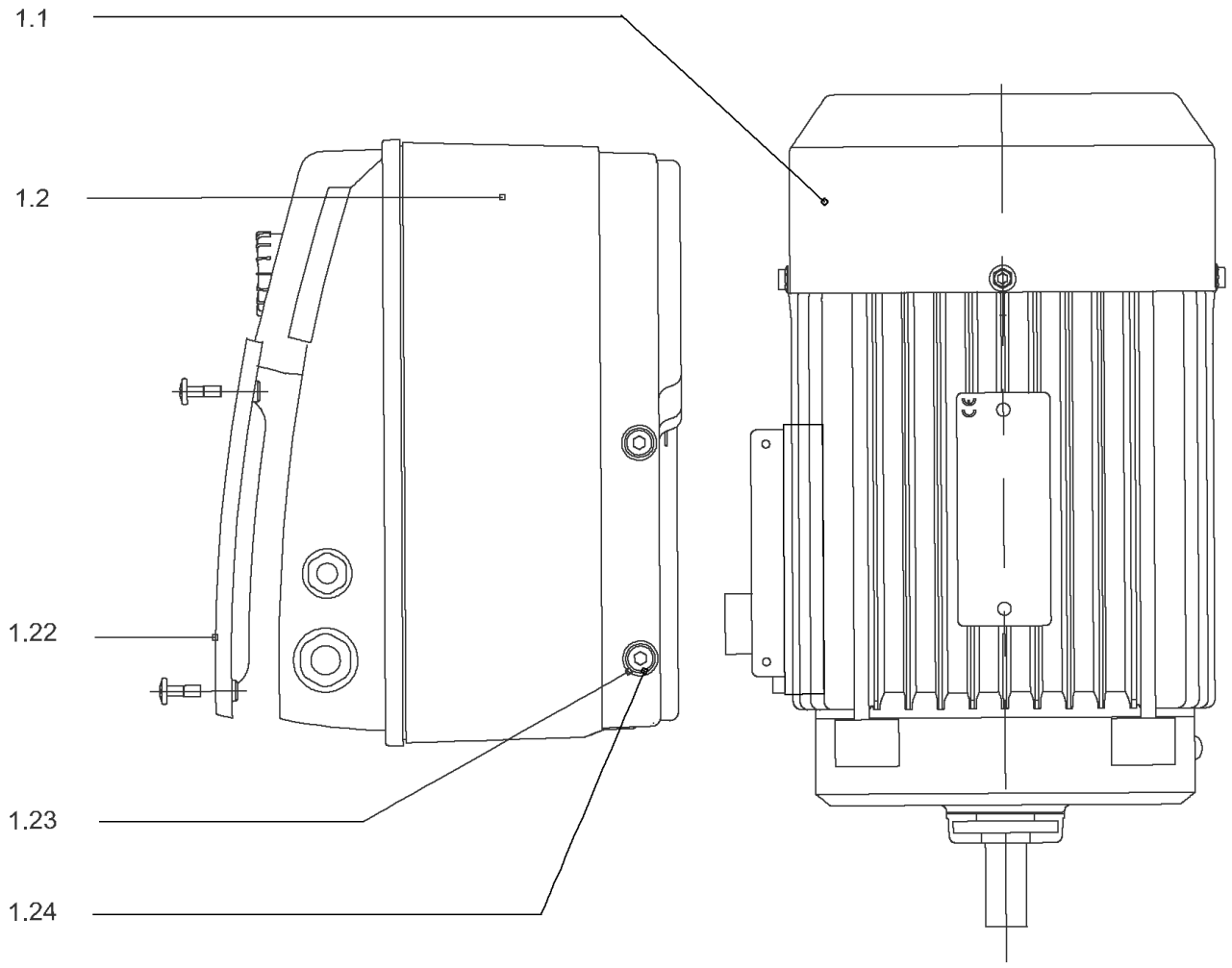
1.1
1.2
1.22
1.23
1.24

## DRIVE HELIX-VE1006-IE2-ATB KIT

| Item | Article no. | Description | Quantity |
|---|---|---|---|
| 1.1 | | MOTOR 4/2/112 3~ 380V 60HZ IE2 ATB VP. | 1 |
| Note: no longer available/nicht mehrlieferbar/n'est plus disponible | | | |
| | | SPARE PARTS MOTOR:ON REQUEST | 1 |
| 1.2 | 4184684 | MODULE HELIX-VE1006-IE2-ATB SET | 1 |
| 1.22 | 2054227 | > MODULE COVER/GASKET TL3/4 KIT | 1 |
| 1.23 | 4215716 | > SCREW M5X16 DIN912 8.8 A2A (4pieces) VP. | 1 |
| 1.24 | 2057978 | > RONDELLE A5,3 DIN6797 FST ZN (4 PIECES) | 1 |

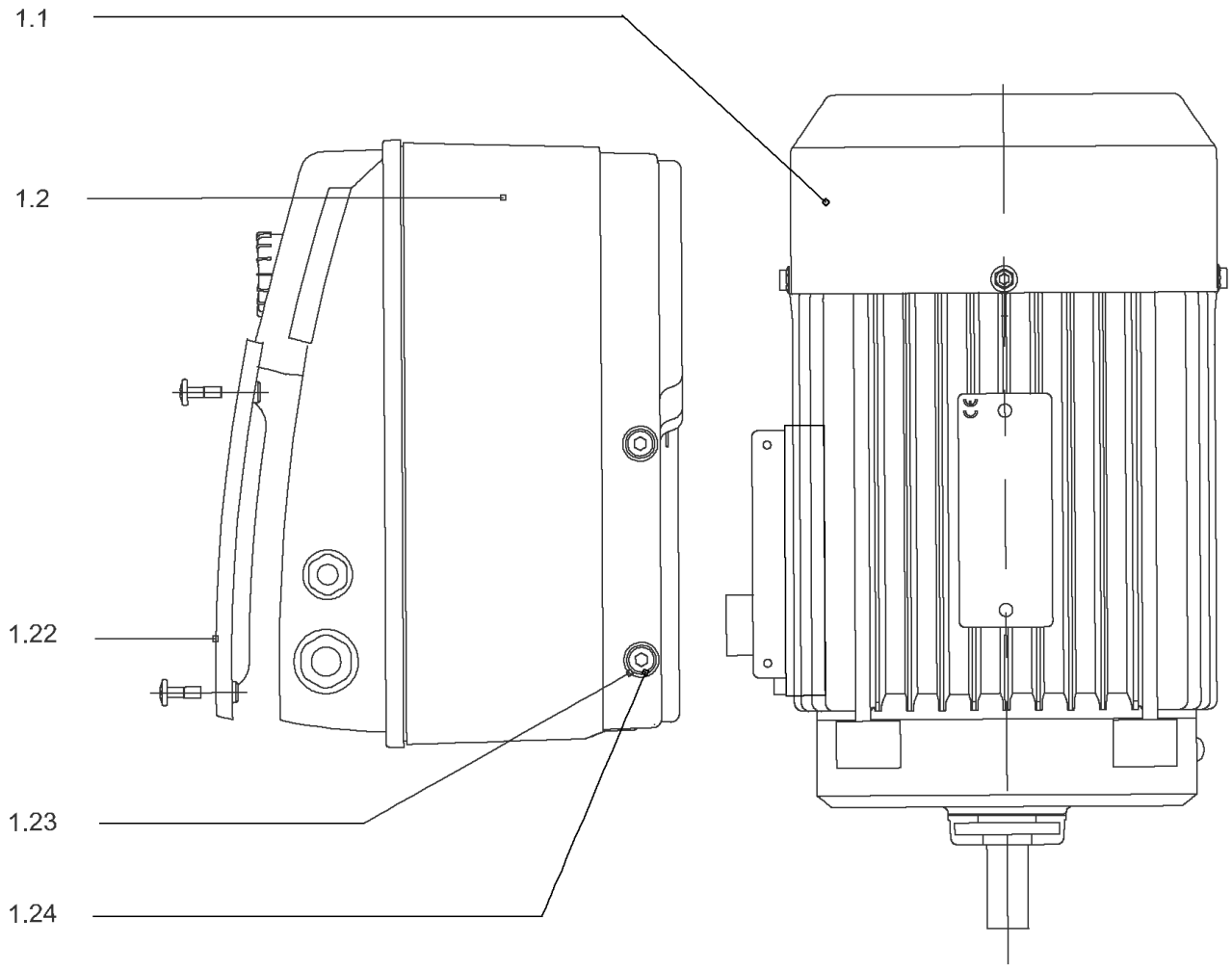
1.1
1.2
1.22
1.23
1.24

## DRIVE HELIX-VE1006-IE2-WE KIT

| Item | Article no. | Description | Quantity |
|---|---|---|---|
| 1.1 | 4188824 | MO.4/2/112 3~380V 60Hz IE2 WE VP. | 1 |
| | | SPARE PARTS MOTOR:ON REQUEST | 1 |
| 1.2 | 4186397 | MODULE HELIX-VE1006-IE2-WE SET | 1 |
| 1.22 | 2054227 | > MODULE COVER/GASKET TL3/4 KIT | 1 |
| 1.23 | 4215716 | > SCREW M5X16 DIN912 8.8 A2A (4pieces) VP. | 1 |
| 1.24 | 2057978 | > RONDELLE A5,3 DIN6797 FST ZN (4 PIECES) | 1 |

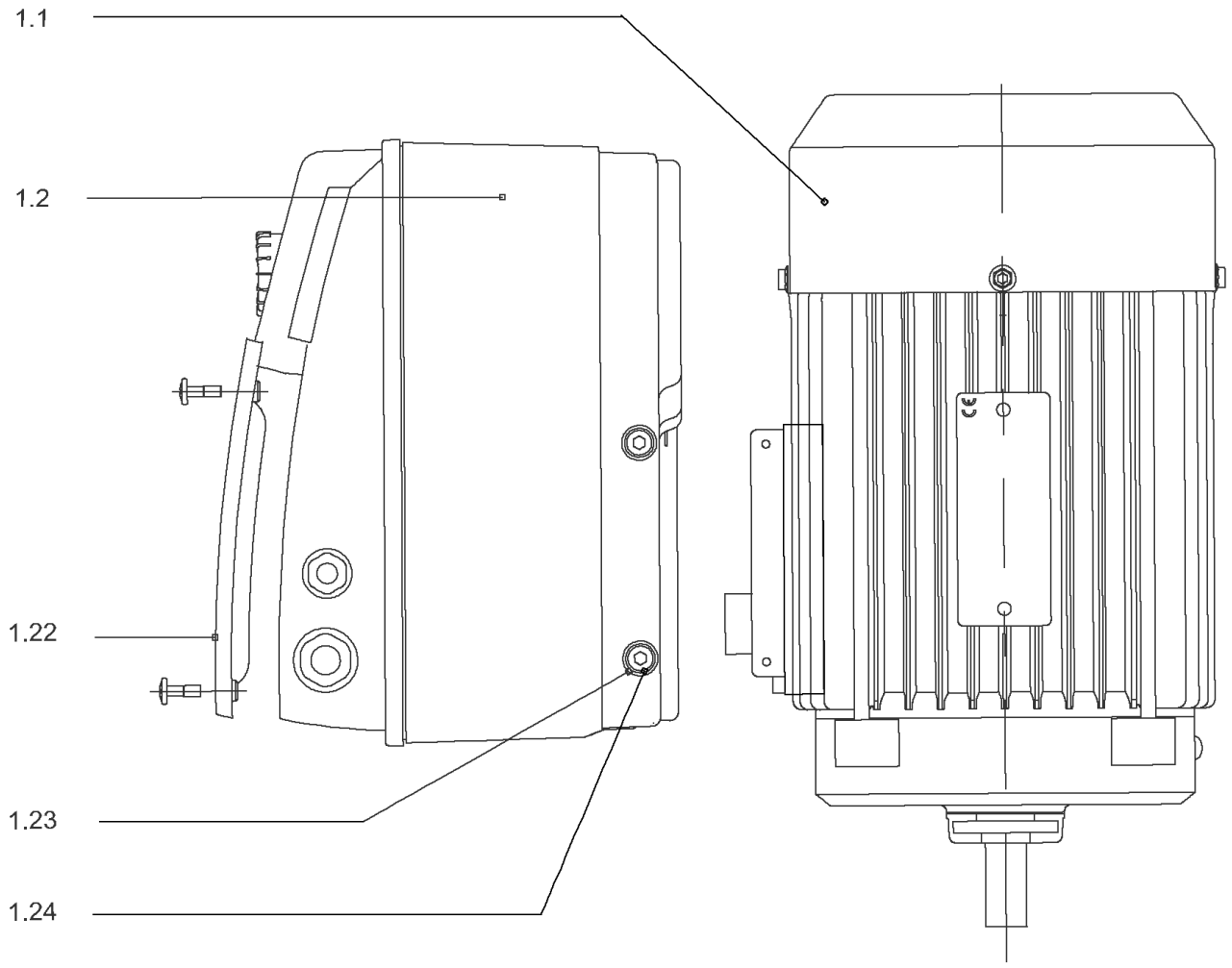
1.1
1.2
1.22
1.23
1.24

## DRIVE HELIX-VE1006-IE4-WE-KIT

| Item | Article no. | Description | Quantity |
|---|---|---|---|
| 1.1 | 4207924 | MOTOR 4/2/112 3~ 380V 60HZ IE4 WE VP. | 1 |
| | | SPARE PARTS MOTOR:ON REQUEST | 1 |
| 1.2 | 4209606 | MODULE HELIX-VE1006-IE4-WE KIT | 1 |
| 1.22 | 2054227 | > MODULE COVER/GASKET TL3/4 KIT | 1 |
| 1.23 | 4215716 | > SCREW M5X16 DIN912 8.8 A2A (4pieces) VP. | 1 |
| 1.24 | 2057978 | > RONDELLE A5,3 DIN6797 FST ZN (4 PIECES) | 1 |

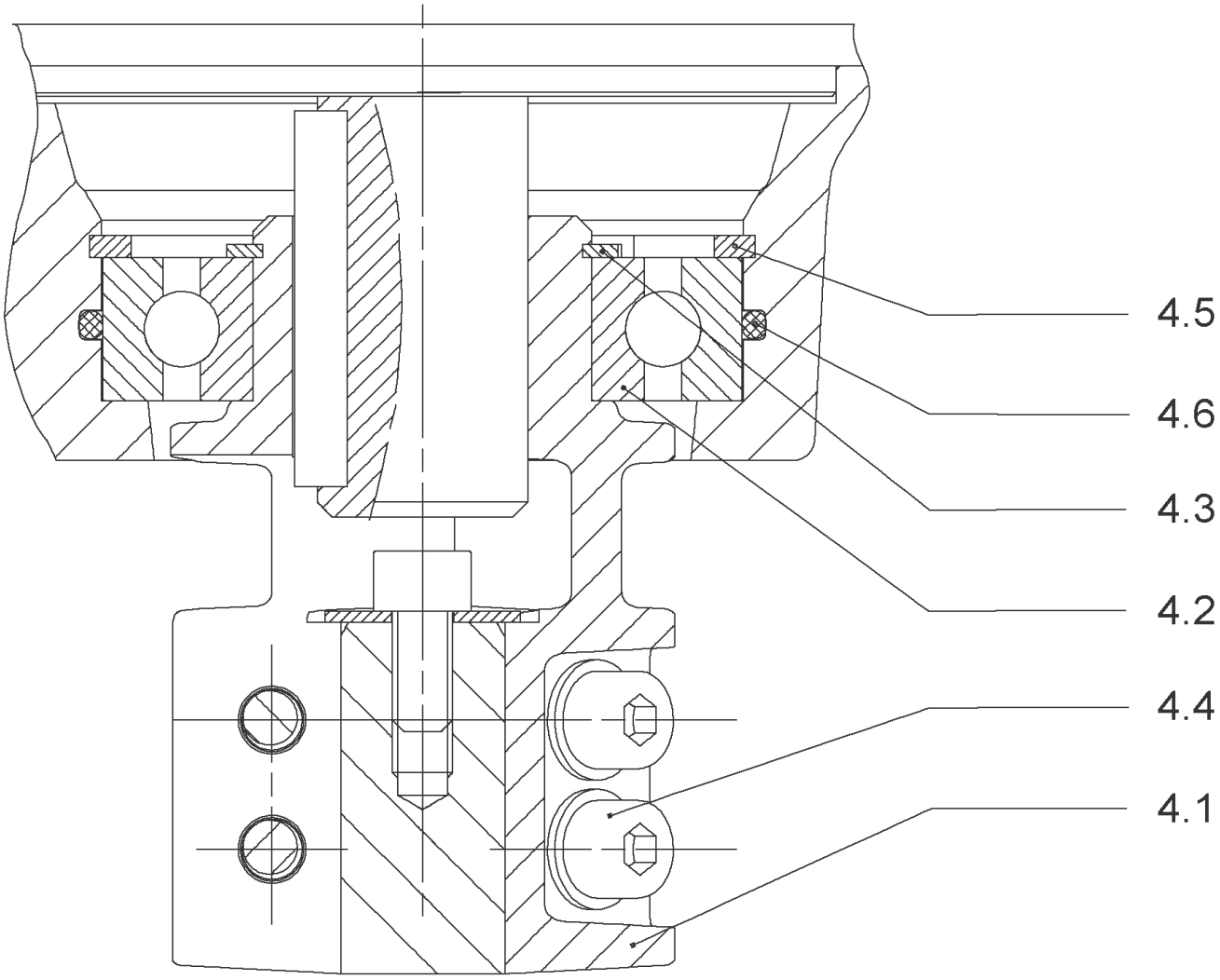
4.5
4.6
4.3
4.2
4.4
4.1

## COUPLING D.16XD.28 FT130 HELIX KIT (4159710)

| Item | Article no. | Description | Quantity |
|---|---|---|---|
| 4.1 | | COUPLING M+ Ø16XØ28 FT130 MACHINED | 1 |
| 4.2 | 2131022 | BALL BEARING 6209/ZZ-C3(HT)VP. | 1 |
| 4.3 | 4233930 | CIRCLIP-FOR-BORES-D45x1,75 VP. | 1 |
| 4.4 | 4157726 | SCREW KIT M8X30 (4 PIECES) | 1 |
| 4.5 | 4234252 | CIRCLIPS 85X3 VP. | 1 |
| 4.6 | 4234243 | O-RING 85X3 VP. | 1 |
| | | NOMEL CONTACT WASHER 8x16x1,4 STEEL ZC | 1 |

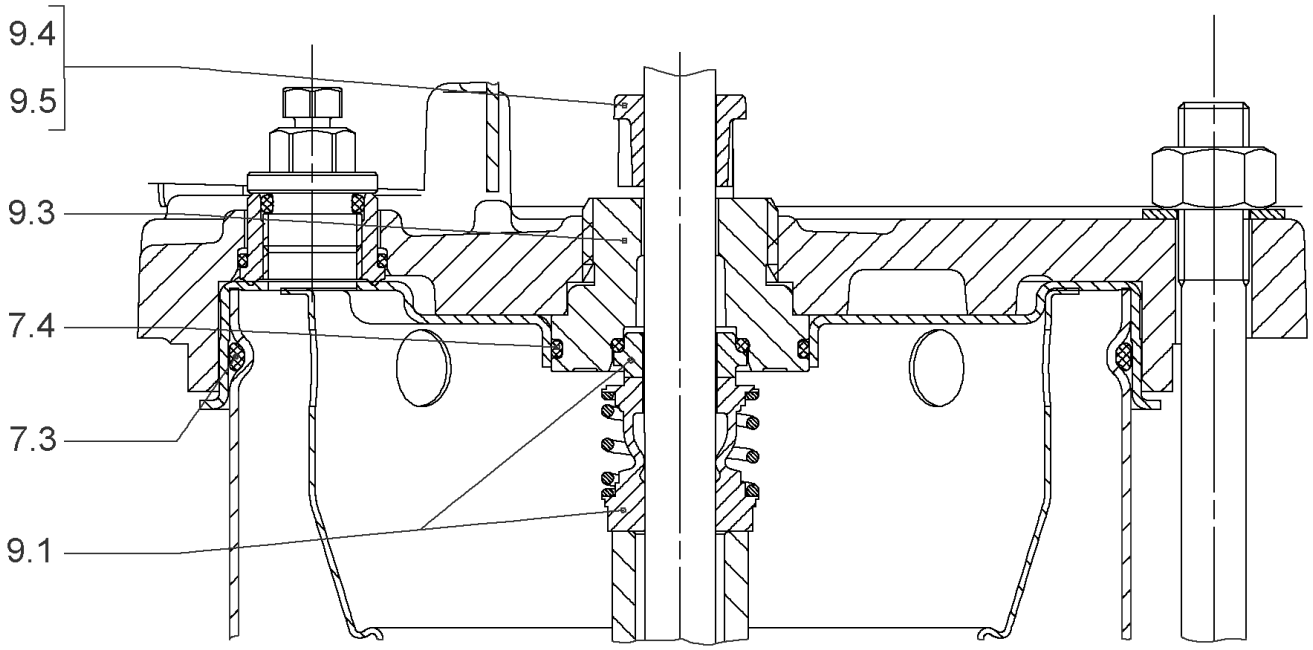
9.4
9.5
9.3
7.4
7.3
9.1

## SEAL-KIT-HELIX6-10-16 O/E KIT (4171327)

| Item | Article no. | Description | Quantity |
|---|---|---|---|
| 7.3 | 4176513 | O-RING FOR PUMP JACKET VP. | 1 |
| 7.4 | 2127603 | O-RING ID.37,6x2,4 EPDM VP. | 1 |
| 9.1 | 4177801 | MECH.SEAL HELIX6-10-16 O/E VP. | 1 |
| 9.3 | 4177798 | MACHINED RING HOLDER M+6" Ø16 304 VP. | 1 |
| 9.5 | 4177799 | MACHINED DRIVE RING Ø16 VP. | 1 |
| 9.4 | 4176520 | SCREW CH M5x5 A4-70 ( 3PIECES ) | 1 |

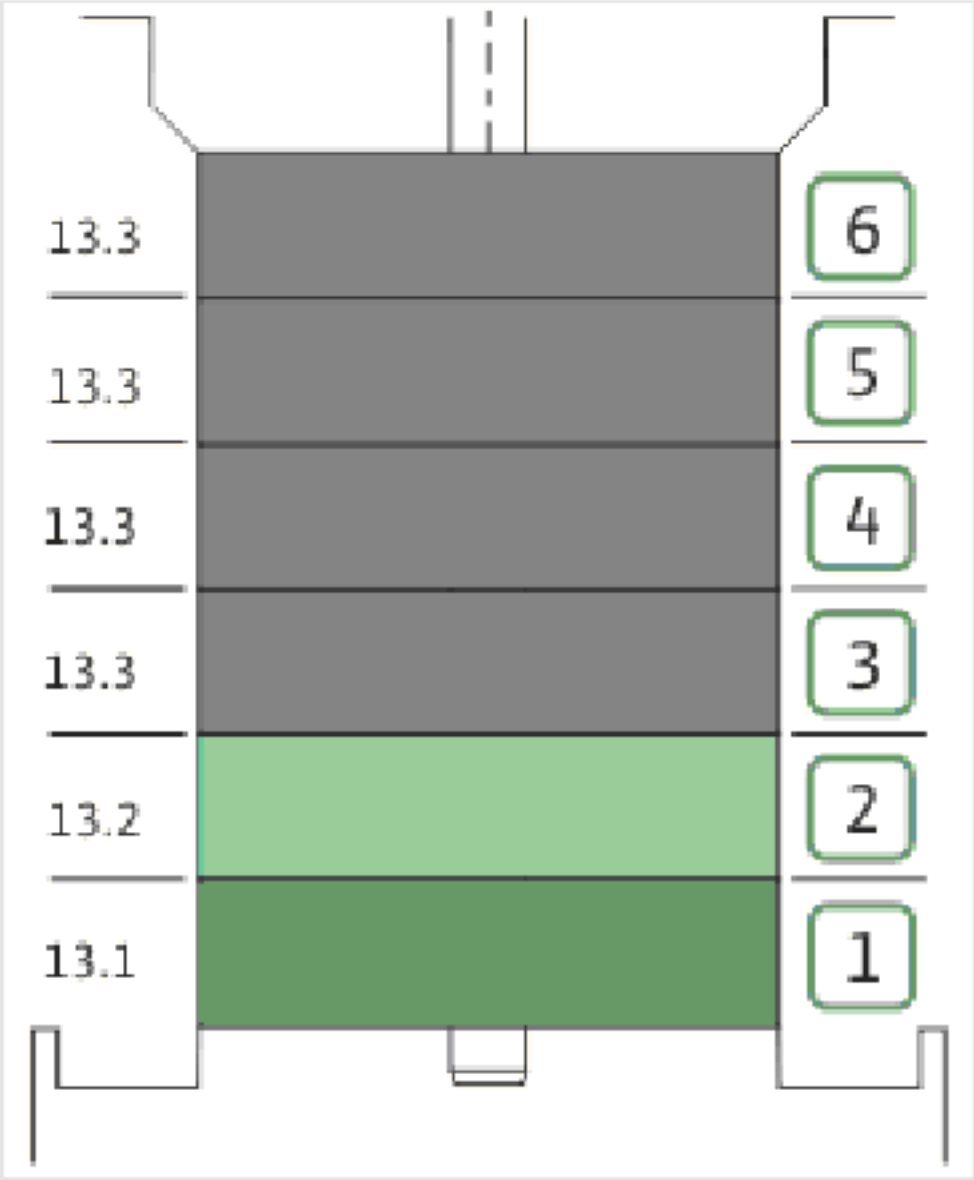
13.3
13.3
13.3
13.3
13.2
13.1
6
5
4
3
2
1

| Item | Article no. | Description | Quantity |
|---|---|---|---|
| 13.1 | 4171331 | STAGE HELIX10 1.4301KIT | 1 |
| | | > MACH.STG-CASING-WOGV-WNR-M+10-304 | 1 |
| | | > IMPELLER-M+10-304 | 1 |
| 13.2 | 4172792 | INTERMEDIATE STAGE HELIX 10 1.4301 KIT | 1 |
| | | > MACH.BEARING-STG-CASING-WNR-M+10-304 | 1 |
| | | > IMPELLER-M+10-304 | 1 |
| | | > SHAFT SLEEVE-SPACER-Ø19,35x18,465-304 | 1 |
| | | > SHAFT-SLEEVE-D16xD20x18-CW | 1 |
| 13.3 | 4172793 | INTERMEDIATE STAGE HELIX 10 1.4301 KIT | 1 |
| | | > MACH.STD-STG-CASING-WGV+NR-M+10-304 | 1 |
| | | > IMPELLER-M+10-304 | 1 |
| | | > IMPELLER SPACER Ø16,05X19,45-L36,465-304 | 1 |

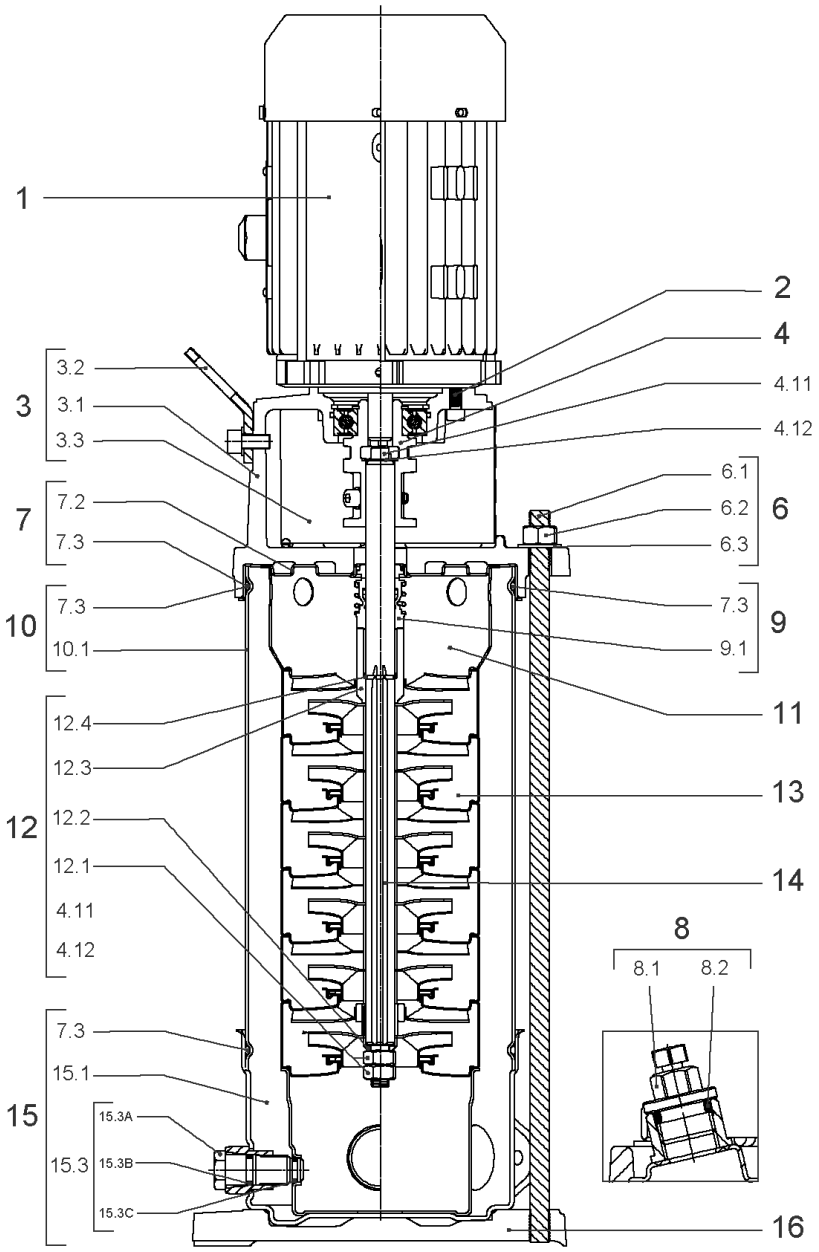
1
2
4
4.11
4.12
3
3.2
3.1
3.3
7
7.2
7.3
10
7.3
10.1
12
12.4
12.3
12.2
12.1
4.11
4.12
15
7.3
15.1
15.3
15.3A
15.3B
15.3C
6
6.1
6.2
6.3
9
7.3
9.1
11
13
14
8
8.1
8.2
16

## HELIX VE1006-1/16/E/S (4201555)

| Item | Article no. | Description | Quantity |
|---|---|---|---|
| 1 | | DRIVE HELIX-VE1006-IE4-WE-KIT | 1 |
| Note: MOTOR BRAND WILO ELEC | | | |
| | | SPARE PARTS MOTOR:ON REQUEST | 1 |
| 2 | 4159707 | SCREW M8X30 (4 PIECES) | 1 |
| 3 | 4214473 | LANTERN FT130 HELIX KIT | 1 |
| 3.1 | | > LANT-MOT-VMI-ReDTC6"-FT130-MACHINED+CATA | 1 |
| 3.2 | 4184852 | > EYELET CPL.FT HELIX (2 PIECES) | 1 |
| 3.3 | 4213782 | > COUPLING PROTECTOR FT115/130 HELIX KIT | 1 |
| 4 | 4159710 | COUPLING D.16XD.28 FT130 HELIX KIT | 1 |
| 6 | 4177822 | STUD BOLT M12X413 KIT | 1 |
| 6.1 | | > TIE BOLT M12-413x18x30-1.4057 | 1 |
| 6.2 | 2094647 | > NUT M12 M12 ISO4032 VP. | 1 |
| 6.3 | 2123557 | > WASHER CS-12.4-24-1.6-NFE25 (4 PIECES) | 1 |
| 7 | 4214481 | STATIONARY RING HOLDER HELIX D27 ReDTC | 1 |
| 7.2 | 4214479 | > STATIONARY RING HOLDER HELIX D27 VP. | 1 |
| 7.3 | 4176513 | > O-RING FOR PUMP JACKET VP. | 1 |
| 8 | 4212724 | FILING/PURGING PLUG HELIX ReDTC KIT | 1 |
| 8.1 | | > FILLING PLUG MVI6"-304 | 1 |
| 8.2 | 4177800 | > O-RING EPDM PLUG HELIX VP. | 1 |
| 9 | 4214483 | MECH.SEAL HELIX6-10-16 O/E ReDTC KIT | 1 |
| 9.1 | 4177801 | > MECH.SEAL HELIX6-10-16 O/E VP. | 1 |
| 7.3 | 4176513 | > O-RING FOR PUMP JACKET VP. | 1 |
| 10 | 4177823 | HOUSING PIPES D.152X285 1.4301 KIT | 1 |
| 7.3 | 4176513 | > O-RING FOR PUMP JACKET VP. | 1 |
| 10.1 | | > HOUSING-PIPE Ø152-M+1006-304 | 1 |
| 11 | 4172791 | CENTERING STAGE-RETURN HELIX10 1.4301VP. | 1 |
| 12 | 4214517 | SHAFT EQUIPMENT HELIX V10 ReDTC KIT | 1 |
| 12.1 | | > NUT-H-M10-A4.70 | 1 |
| 12.2 | | > SERRATED LOCK WASHER M+10M3-316L | 1 |
| 12.3 | | > 1/2-SNAP-RING-6/10M3-316L | 1 |
| 12.4 | | > STOP-RUSH-1/2-D16xd2-M+316 | 1 |
| 4.11 | | > SCREW CHC-M6X14-8.8-ISO4762-GEOMET500A | 1 |
| 4.12 | | > WASHER D.24 L6U ZINK | 1 |
| 13 | | HYDRAULIC HELIX V 1006 1.4307 | 1 |

| Item | Article no. | Description | Quantity |
|---|---|---|---|
| 14 | 4214500 | SHAFT D.16X353 HELIX 1.4057 VP. | 1 |
| 15 | 4159682 | PUMP HOUSING HELIX DN50 PN16 1.4301 KIT | 1 |
| 7.3 | 4176513 | > O-RING FOR PUMP JACKET VP. | 1 |
| 15.1 | | > BLASTING PPE HOUSING V-PN16-DN50-304 | 1 |
| 15.2 | 4217893 | > COUNTER FLANGE-G1"1/2-PN16-GJL KIT | 1 |
| 15.3 | 4171321 | > PRIMING/DRAIN PLUG EPDM HELIX KIT | 1 |
| 16 | 4176517 | BASEPLATE V8/10 VP. | 1 |

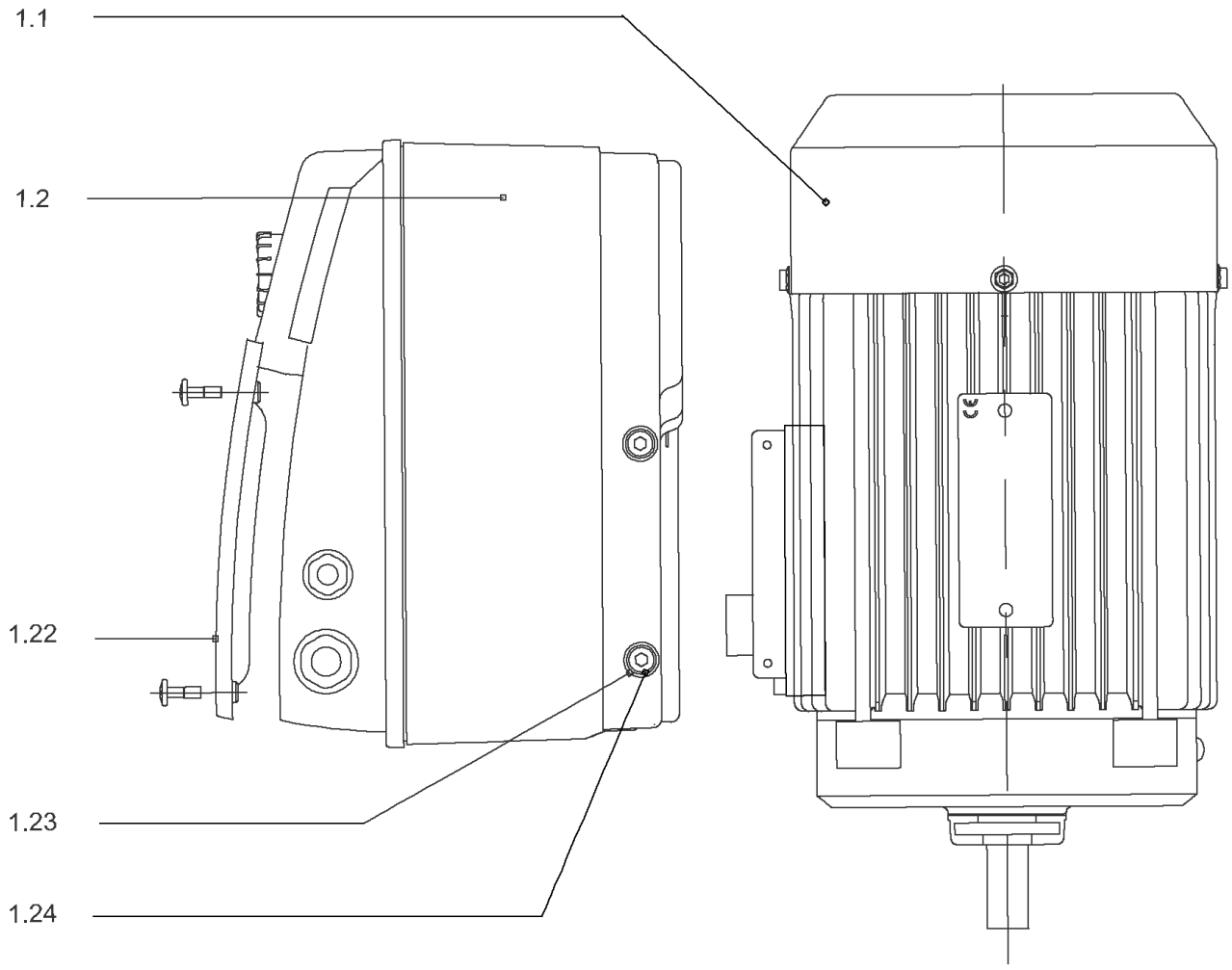
1.1
1.2
1.22
1.23
1.24

## DRIVE HELIX-VE1006-IE4-WE-KIT

| Item | Article no. | Description | Quantity |
|---|---|---|---|
| 1.1 | 4207924 | MOTOR 4/2/112 3~ 380V 60HZ IE4 WE VP. | 1 |
| | | SPARE PARTS MOTOR:ON REQUEST | 1 |
| 1.2 | 4209606 | MODULE HELIX-VE1006-IE4-WE KIT | 1 |
| 1.22 | 2054227 | > MODULE COVER/GASKET TL3/4 KIT | 1 |
| 1.23 | 4215716 | > SCREW M5X16 DIN912 8.8 A2A (4pieces) VP. | 1 |
| 1.24 | 2057978 | > RONDELLE A5,3 DIN6797 FST ZN (4 PIECES) | 1 |

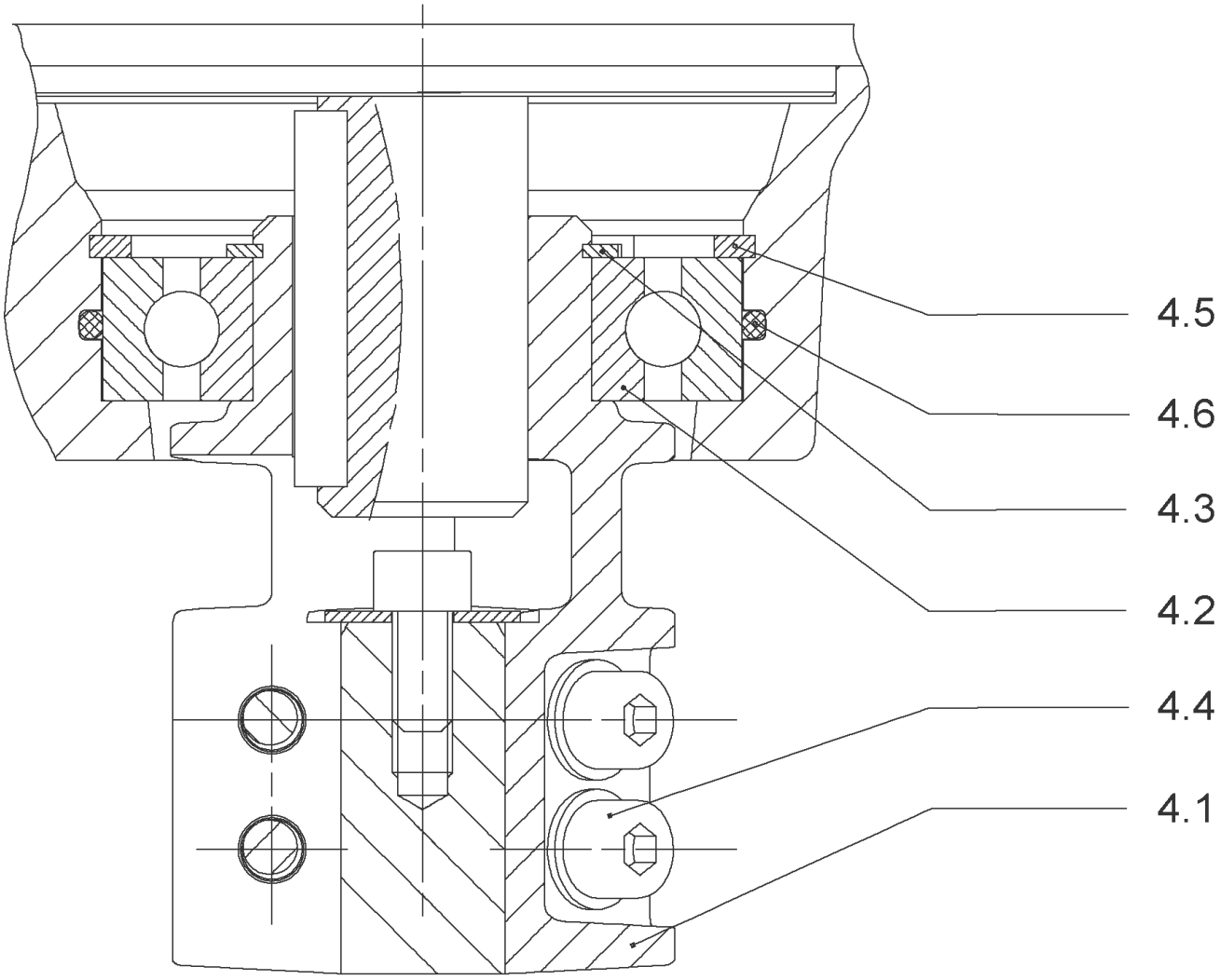
4.5
4.6
4.3
4.2
4.4
4.1

## COUPLING D.16XD.28 FT130 HELIX KIT (4159710)

| Item | Article no. | Description | Quantity |
|---|---|---|---|
| 4.1 | | COUPLING M+ Ø16XØ28 FT130 MACHINED | 1 |
| 4.2 | 2131022 | BALL BEARING 6209/ZZ-C3(HT)VP. | 1 |
| 4.3 | 4233930 | CIRCLIP-FOR-BORES-D45x1,75 VP. | 1 |
| 4.4 | 4157726 | SCREW KIT M8X30 (4 PIECES) | 1 |
| 4.5 | 4234252 | CIRCLIPS 85X3 VP. | 1 |
| 4.6 | 4234243 | O-RING 85X3 VP. | 1 |
| | | NOMEL CONTACT WASHER 8x16x1,4 STEEL ZC | 1 |

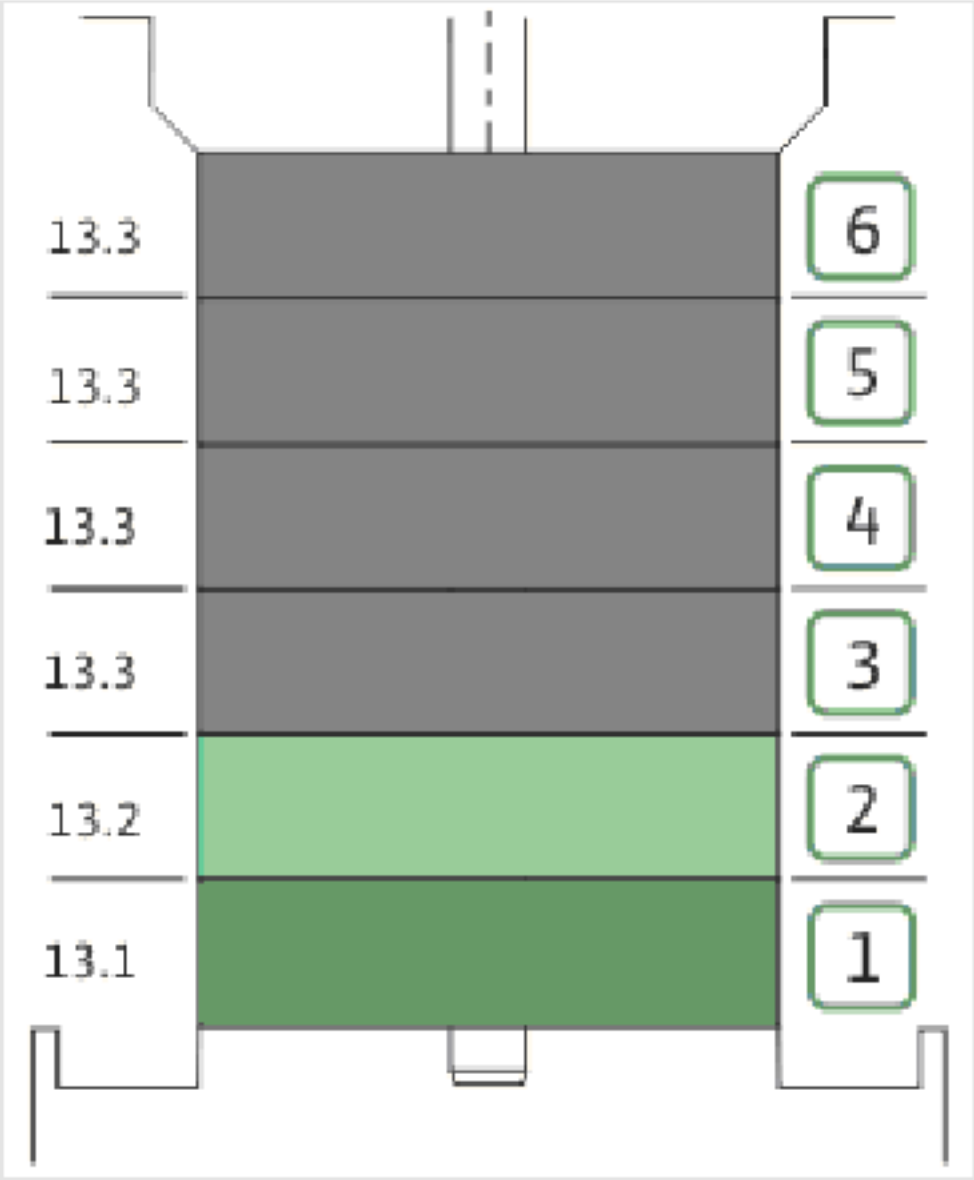
13.3
13.3
13.3
13.3
13.2
13.1
6
5
4
3
2
1

| Item | Article no. | Description | Quantity |
|---|---|---|---|
| 13.1 | 4171331 | STAGE HELIX10 1.4301KIT | 1 |
| | | > MACH.STG-CASING-WOGV-WNR-M+10-304 | 1 |
| | | > IMPELLER-M+10-304 | 1 |
| 13.2 | 4172792 | INTERMEDIATE STAGE HELIX 10 1.4301 KIT | 1 |
| | | > MACH.BEARING-STG-CASING-WNR-M+10-304 | 1 |
| | | > IMPELLER-M+10-304 | 1 |
| | | > SHAFT SLEEVE-SPACER-Ø19,35x18,465-304 | 1 |
| | | > SHAFT-SLEEVE-D16xD20x18-CW | 1 |
| 13.3 | 4172793 | INTERMEDIATE STAGE HELIX 10 1.4301 KIT | 1 |
| | | > MACH.STD-STG-CASING-WGV+NR-M+10-304 | 1 |
| | | > IMPELLER-M+10-304 | 1 |
| | | > IMPELLER SPACER Ø16,05X19,45-L36,465-304 | 1 |

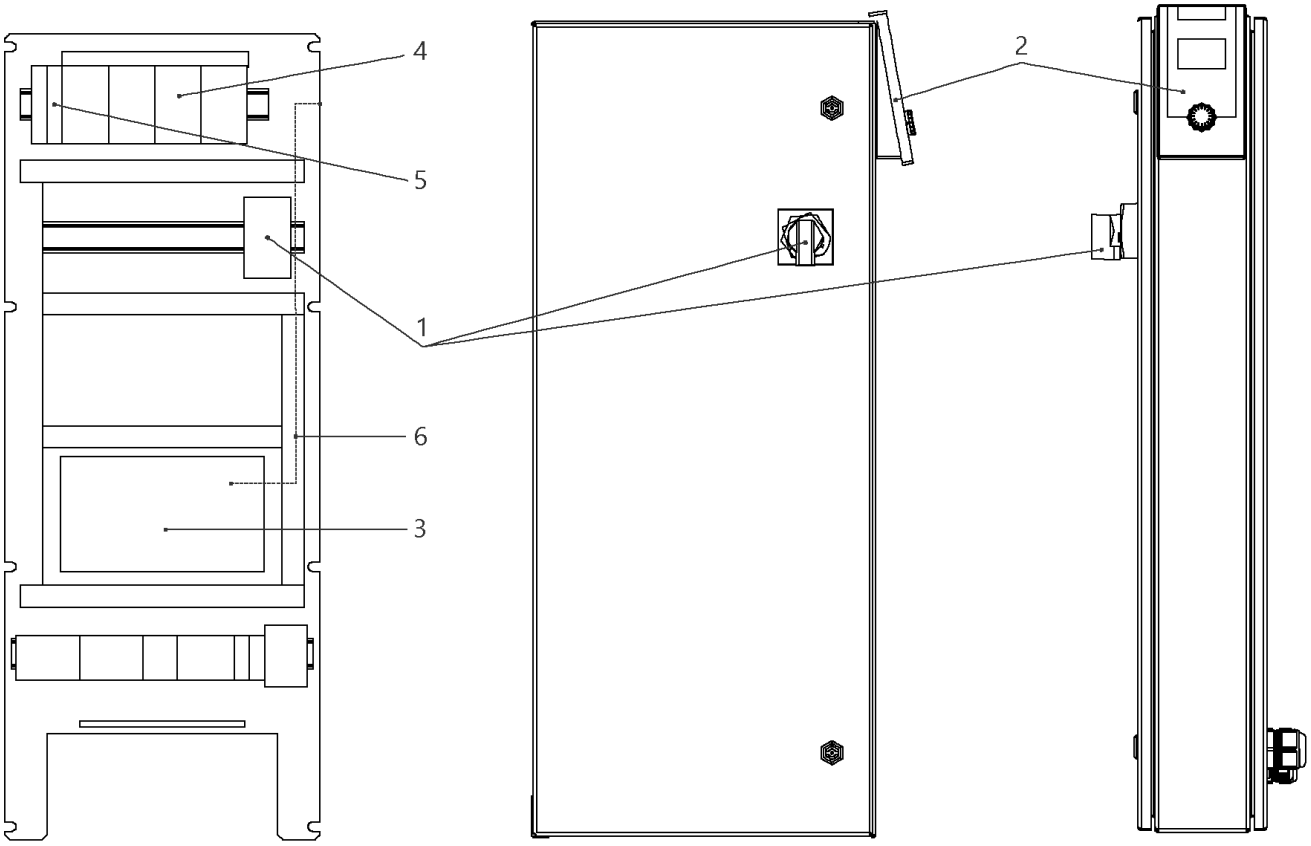
4
5
1
6
3
2

## W-CTRL-SCE-B-4x4,0KW-T4-FM-ND2

| Item | Article no. | Description | Quantity |
|---|---|---|---|
| 1 | 2104473 | MAIN SWITCH OT63F3 L105 KIT | 1 |
| 2 | 4184784 | CONTROL PANEL HMI SC KIT | 1 |
| 2 | 4185259 | ASSEMBLY DISPLAY SC PKG VP. | 1 |
| 3 | 4185257 | ASSEMBLY CPU SCe Booster VP. | 1 |
| 4 | 2051217 | AUTOM.CIRCUIT BREAKER S203 B16 TO7,5kW | 1 |
| 5 | 2046288 | CIRCUIT BREAKER S201 B16 | 1 |
| 6 | 4194956 | PATCH CABLE RJ45 CAT6 1,0M BLUE SC-PANEL | 1 |

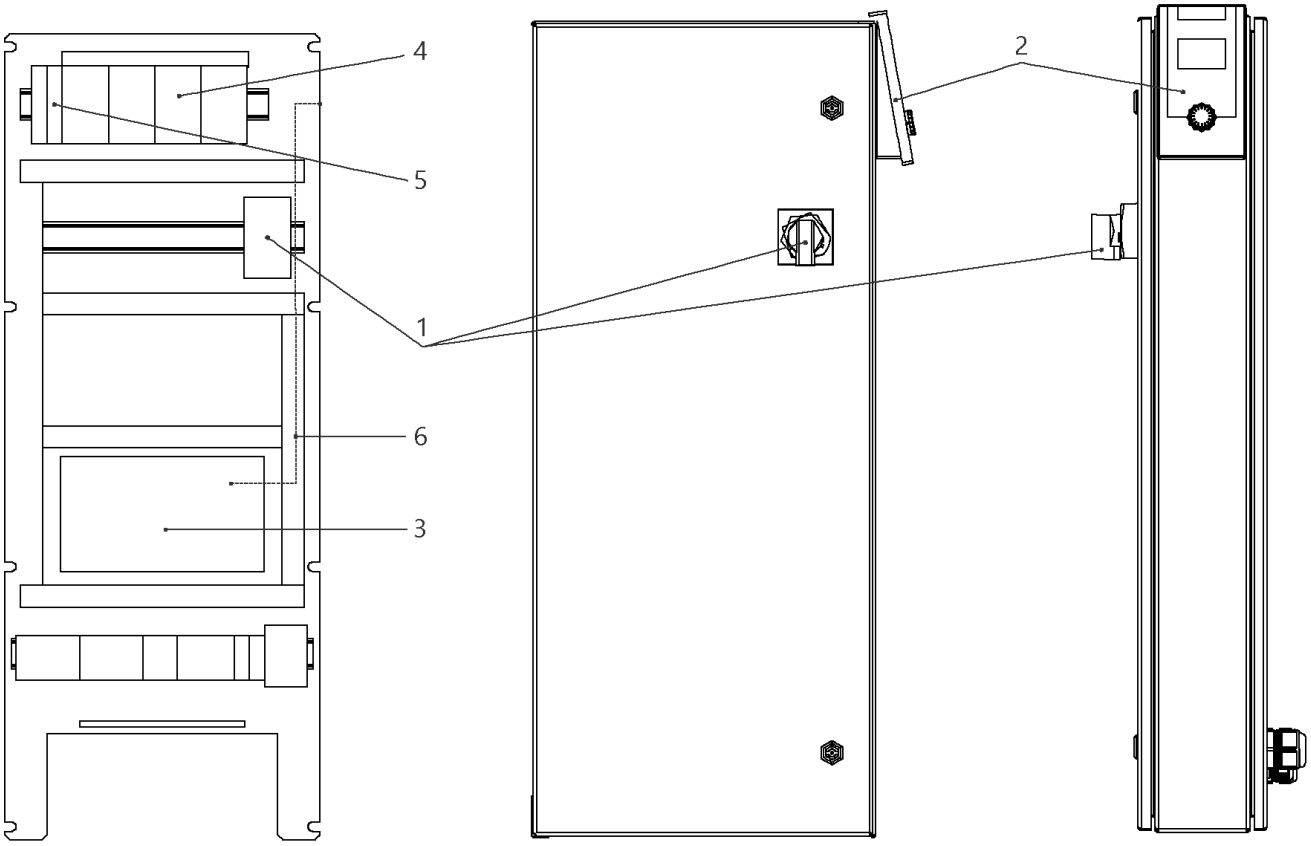
4
5
1
6
3
2

## W-CTRL-SCE-B-4x13A-T34-FM-ND2-AVC-PKG (2541907)

| Item | Article no. | Description | Quantity |
|---|---|---|---|
| 1 | 2104477 | MAIN SWITCH OT80F3 L105 KIT | 1 |
| Note: TO / BIS / JUSQU'AU 30/06/2015 | | | |
| 1 | 2104473 | MAIN SWITCH OT63F3 L105 KIT | 1 |
| Note: FROM / AB / À PARTIR DU 01/07/2015 | | | |
| 2 | 4184784 | CONTROL PANEL HMI SC KIT | 1 |
| 2 | 4185259 | ASSEMBLY DISPLAY SC PKG VP. | 1 |
| Note: DISPLAY ALONE / PLATINE SEULE | | | |
| 3 | 4185257 | ASSEMBLY CPU SCe Booster VP. | 1 |
| 5 | 2046288 | CIRCUIT BREAKER S201 B16 | 1 |
| 4 | 2051217 | AUTOM.CIRCUIT BREAKER S203 B16 TO7,5kW | 1 |
| 6 | 4194956 | PATCH CABLE RJ45 CAT6 1,0M BLUE SC-PANEL | 1 |

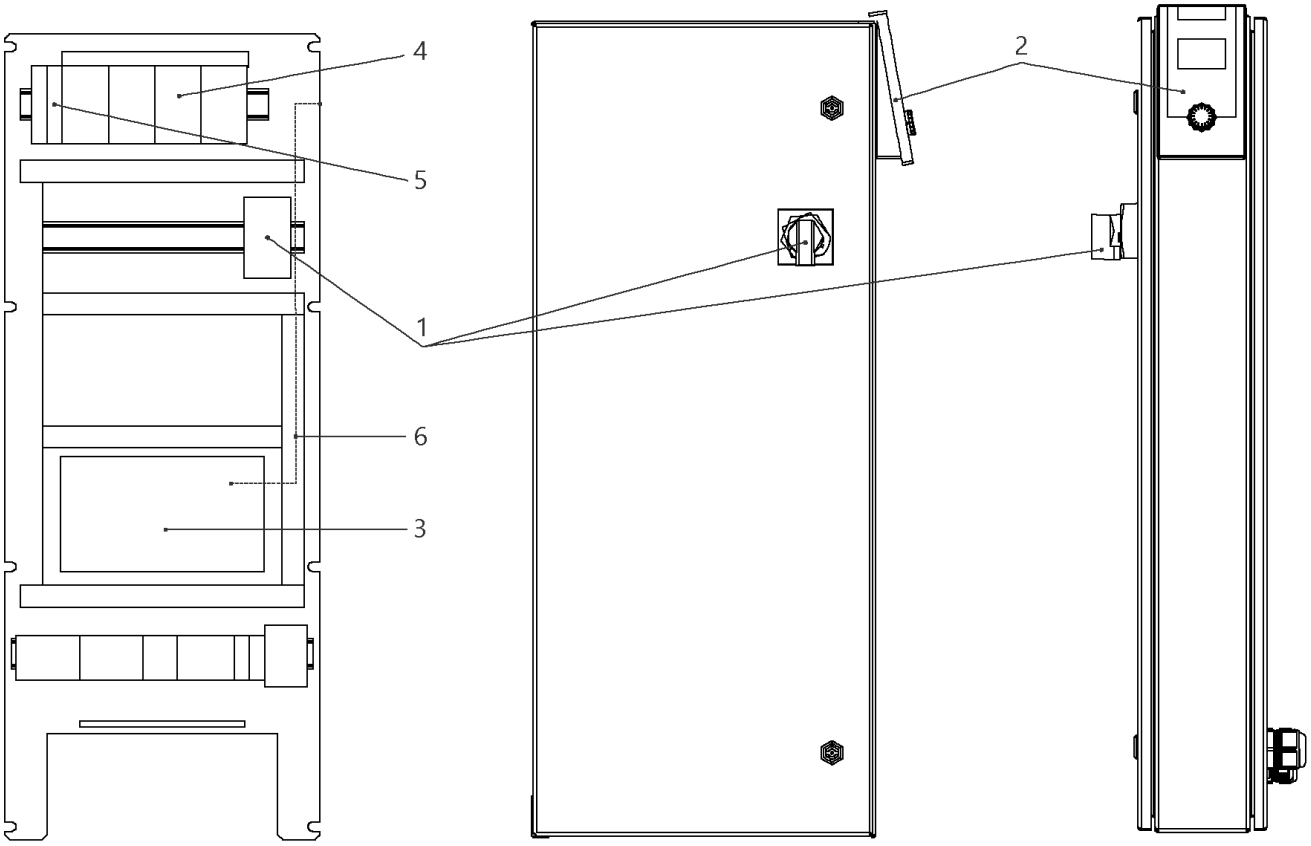
4
5
1
6
3
2

## W-CTRL-SCE-B-4x10A-T34-FM-ND2-AVC-PKG (2541903)

| Item | Article no. | Description | Quantity |
|---|---|---|---|
| 1 | 2104473 | MAIN SWITCH OT63F3 L105 KIT | 1 |
| 2 | 4184784 | CONTROL PANEL HMI SC KIT | 1 |
| 2 | 4185259 | ASSEMBLY DISPLAY SC PKG VP. | 1 |
| Note: DISPLAY ALONE / PLATINE SEULE | | | |
| 3 | 4185257 | ASSEMBLY CPU SCe Booster VP. | 1 |
| 5 | 2046288 | CIRCUIT BREAKER S201 B16 | 1 |
| 4 | 2119861 | AUTOMATIC CIRCUIT BREAKER S203 B13 3POL. | 1 |
| 6 | 4194956 | PATCH CABLE RJ45 CAT6 1,0M BLUE SC-PANEL | 1 |

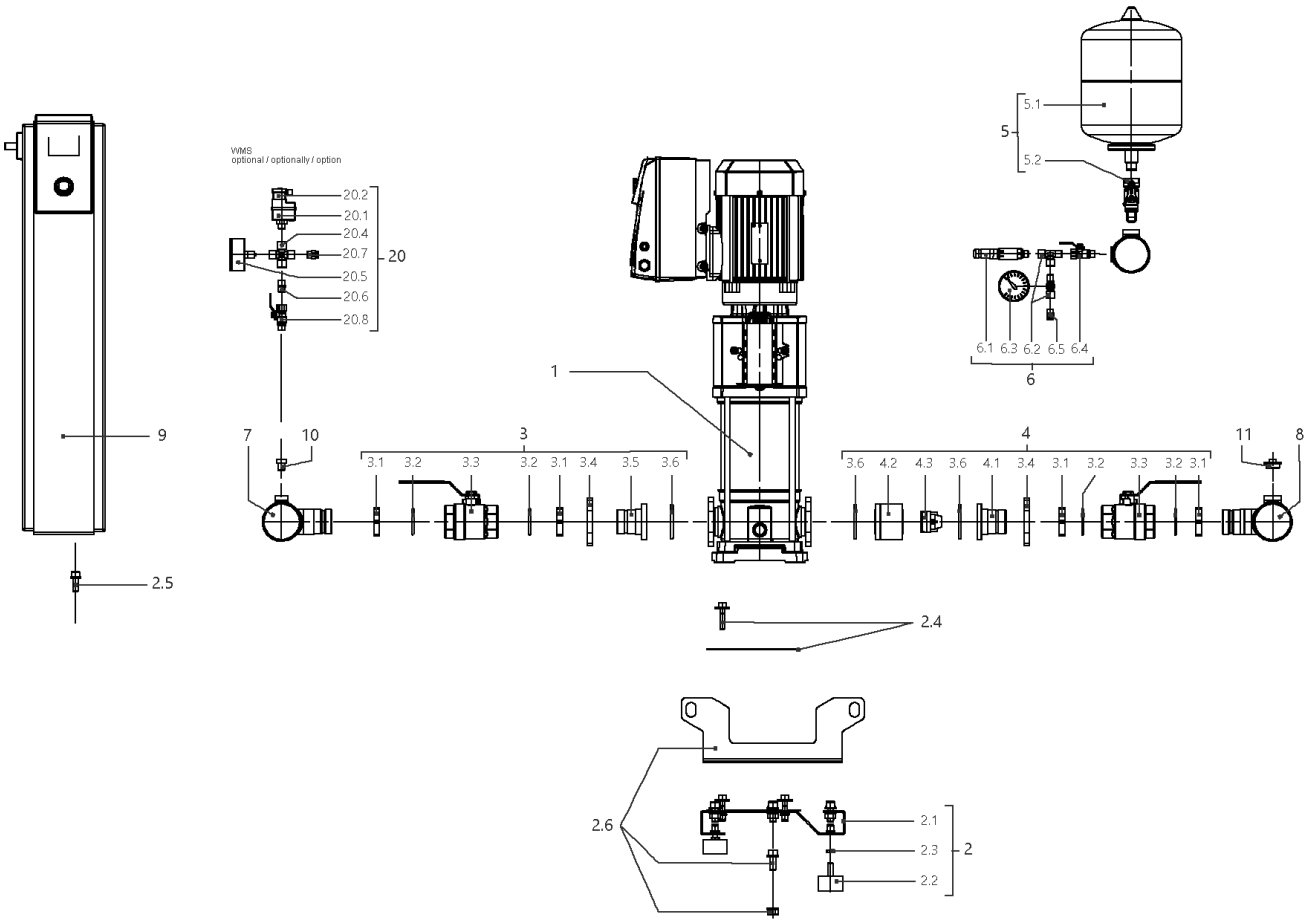
VVMS
optional / optionally / option
20.2
20.1
20.4
20.7
20.5
20.6
20.8
20
5.1
5
5.2
6.1 6.3 6.2 6.5 6.4
6
1
9
7
10
3
3.1 3.2 3.3 3.2 3.1 3.4 3.5 3.6
4
3.6 4.2 4.3 3.6 4.1 3.4 3.1 3.2 3.3 3.2 3.1
11
8
2.5
2.4
2.6
2.1
2.3
2.2
2

## SiBoost Smart 4HELIX VE1009 (2536356)

| Item | Article no. | Description | Quantity |
|---|---|---|---|
| 1 | | HELIX VE1009-1/16/E/KS/FF240/EC | 1 |
| 2 | 4197134 | BASE PLATE DE4 1450x420 KIT | 1 |
| 2.1 | | > BASEPLATE_4x4/6/10/16V_E300_BOX_150 | 1 |
| 2.2 | 2028654 | > VIBRATION DAMPER D.50X30 M10X28 | 1 |
| 2.3 | 2028281 | > NUT M10 DIN936 (ISO4035) 17H VZ | 1 |
| 2.4 | 4197083 | > HOLDER PUMP Helix 10/16 KIT | 1 |
| 2.5 | 4197084 | > HOLDER SWITCHBOX WILO Smart Control KIT | 1 |
| 2.6 | 4197117 | > LIFTING Siboost HELIX SC KIT | 1 |
| 3 | 4197072 | SUCTION SIDE Siboost Helix10/16 KIT | 1 |
| 3.1 | 2032623 | > NUT G1 1/2"SW55 MS | 1 |
| 3.2 | 2032616 | > O-RING ID.44X3,53N DIN3771 E7502 | 1 |
| 3.2 | 2534877 | > BALL TAP KDW40-H G11/2I-I-DN40 DVGW | 1 |
| 3.4 | 2032626 | > OVAL FLANGE D52-LK100 ST-VZ | 1 |
| 3.5 | 2032627 | > UNION INSERT DN40 LAPPED FLANGE | 1 |
| 3.6 | 2032628 | > O-RING ID.56,52X5,33N DIN3771 E7502 | 1 |
| 4 | 4197074 | DELIVERY SIDE Siboost Helix V10 KIT | 1 |
| 3.1 | 2032623 | > NUT G1 1/2"SW55 MS | 1 |
| 3.2 | 2032616 | > O-RING ID.44X3,53N DIN3771 E7502 | 1 |
| 3.3 | 2534877 | > BALL TAP KDW40-H G11/2I-I-DN40 DVGW | 1 |
| 3.4 | 2032626 | > OVAL FLANGE D52-LK100 ST-VZ | 1 |
| 4.1 | 2054316 | > UNION INSERT DN40 LAPPED FLANGE(W.SLOT) | 1 |
| 4.2 | 2054317 | > HOUSING F.NON RETURN VALVE(RV-IN) DN40 | 1 |
| 4.3 | 2032631 | > NON-RETURN-DEVICE DN40 (MTR)TYP RV-IN | 1 |
| 3.6 | 2032628 | > O-RING ID.56,52X5,33N DIN3771 E7502 | 1 |
| 5 | 2032642 | DIAPHREM TANK 8L/PN16 DIN4807/T5 KIT | 1 |
| 5.1 | 2045914 | > DIAPHREM TANK 8L TYP-DD 16BAR | 1 |
| 5.2 | 2027853 | > FLOW FITTING G3/4 FOR DIAPHRAGM VES. | 1 |
| 6 | 4197076 | PRESSURE SENSOR/ GAUGE 0-16BAR KIT | 1 |
| 6.1 | 2085909 | > PRESS.SENSOR 1/4" 0-16BAR 4-20MA VP. | 1 |
| 6.2 | 4197077 | > T-PIECE 1/4" VP. | 1 |
| 6.3 | 2028692 | > PRESSURE GAUGE NG63-PN16-G1/4 | 1 |
| 6.4 | 2028291 | > BALL TAP R1/4" PN42 GIACOMINI R254DL | 1 |
| 6.5 | 2028691 | > BLOWGUN 1/4" MS 30BAR VP. | 1 |
| 7 | 4197129 | PIPE DE4 R3''-4x11/2"+2x1/4x1200 VP. | 1 |

| Item | Article no. | Description | Quantity |
|---|---|---|---|
| 8 | 4197130 | PIPE DE4 R3''-4x11/2"+2x1/4+1x3/4x1200 | 1 |
| 9 | | W-CTRL-SCE-B-4x5,5KW-T4-FM-ND2 | 1 |
| Note: TO / BIS / JUSQU'AU 18/05/2014 | | | |
| 9 | 2541907 | W-CTRL-SCE-B-4x13A-T34-FM-ND2-AVC-PKG | 1 |
| Note: FROM / AB / À PARTIR DU 19/05/2014 | | | |
| 10 | 4197079 | PLUG G1/4"x10 AISI304 KIT | 1 |
| 11 | 2032654 | PLUG R3/4" MS VIEGA 1751 | 1 |
| 20 | | ASSEMBLY WMS. DE-EB. +VP | 1 |
| 20.1 | 2028652 | > PRESSURE SWITCH PS3-ASR 1/(1,3) VP. | 1 |
| 20.2 | 2130983 | > PLUG PS3-415 WITH KABEL 1,5M 2NO VP. | 1 |
| 20.4 | 2028290 | > CROSSPIECE R1/4" MS-NICKEL | 1 |
| 20.5 | 2028687 | > PRESSURE GAUGE NG63 R1/4" HI.0-6BAR | 1 |
| 20.6 | 2054268 | > DUAL NIPPLE G1/4" x G1/4" MS VP. | 1 |
| 20.7 | 2028691 | > BLOWGUN 1/4" MS 30BAR VP. | 1 |
| 20.8 | 2028291 | > BALL TAP R1/4" PN42 GIACOMINI R254DL | 1 |

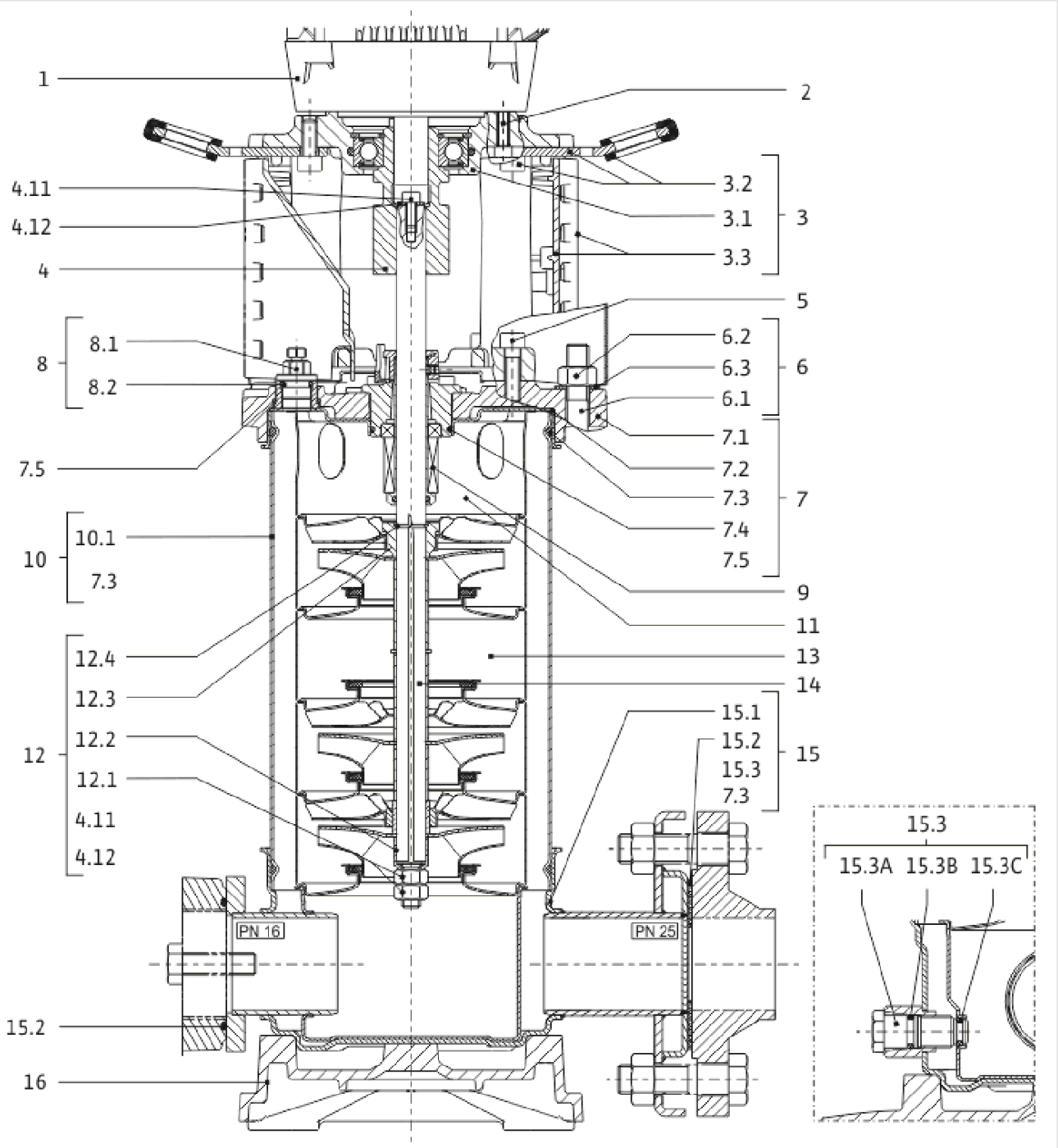
1
2
4.11
4.12
4
3.2
3.1
3.3
3
5
8
8.1
8.2
6.2
6.3
6.1
6
7.5
7.1
7.2
7.3
7.4
7.5
7
10
10.1
7.3
9
11
12
12.4
12.3
12.2
12.1
4.11
4.12
13
14
15.1
15.2
15.3
7.3
15
PN 16
PN 25
15.2
16
15.3
15.3A
15.3B
15.3C

| Item | Article no. | Description | Quantity |
|---|---|---|---|
| 1 | | DRIVE HELIX-VE1009-FF24-IE2-ATB KIT | 1 |
| Note: MOTOR BRAND SIEMENS | | | |
| 2 | 4174093 | SCREW M12X50 (4 PIECES) | 1 |
| 3 | 4197828 | LANTERN FF240 HELIX KIT | 1 |
| 3.1 | | > LANTERN FF240 M+6" JL250 MACHINING+CATA | 1 |
| 3.2 | 4186346 | > EYELET CPL.FF240 HELIX (4 PIECES) | 1 |
| 3.3 | 4159695 | > COUPLING PROTECTOR FF HELIX KIT | 1 |
| 4 | 4159711 | COUPLING D.16XD.38 FF265 HELIX KIT | 1 |
| 5 | 4159707 | SCREW M8X30 (4 PIECES) | 1 |
| 6 | 4177832 | STUD BOLT M12X527KIT | 1 |
| 6.1 | | > TIE BOLT M12-527x18x30-1.4057 | 1 |
| 6.2 | 2094647 | > NUT M12 M12 ISO4032 VP. | 1 |
| 6.3 | 2123557 | > WASHER CS-12.4-24-1.6-NFE25 (4 PIECES) | 1 |
| 7 | 4159685 | END SHIELD HELIX EPDM KIT | 1 |
| 7.1 | | > END SHIELD M+6" GJL250 MACHINING+CATA | 1 |
| 7.2 | 2127607 | > STATIONARY RING HOLDER 6" HELIX 1.4301 V | 1 |
| 7.3 | 4176513 | > O-RING FOR PUMP JACKET VP. | 1 |
| 7.4 | 2127603 | > O-RING ID.37,6x2,4 EPDM VP. | 1 |
| 7.5 | 2127602 | > O-RING ID.21,35x2 EPDM VP. | 1 |
| 8 | 4159686 | FILING/PURGING PLUG HELIX EPDM KIT | 1 |
| 9 | 4159696 | CARTRIDGE HELIX6-10-16 O/E KIT | 1 |
| 10 | 4177833 | HOUSING PIPES D.152X397 1.4301 KIT | 1 |
| 7.3 | 4176513 | > O-RING FOR PUMP JACKET VP. | 1 |
| 10.1 | | > HOUSING-PIPE Ø152-M+1009-304 | 1 |
| 11 | 4172791 | CENTERING STAGE-RETURN HELIX10 1.4301VP. | 1 |
| 12 | 4171332 | SHAFT EQUIPMENT HELIX V10 BI BLOC KIT | 1 |
| 4.11 | 4102901 | > SCREW CHC-M6X14-8.8-ISO4762-GEOMET500A | 1 |
| 4.12 | 2130995 | > SERRATED LOCK WASHER D.6,2XD.14,5X28 VP. | 1 |
| 12.1 | | > NUT-H-M10-A4.70 | 1 |
| 12.2 | | > SERRATED LOCK WASHER M+10M3-316L | 1 |
| 12.3 | | > STOP COLLAR OF IMPELLER L16,5-Ø16-316L | 1 |
| 12.4 | | > STOP-RUSH-1/2-D16xd2-M+316 | 1 |
| 13 | | HYDRAULIC HELIX V 1009 1.4307 | 1 |
| 14 | 4177837 | SHAFTS D.16X517,5 1.4301 VP. | 1 |

| Item | Article no. | Description | Quantity |
|---|---|---|---|
| 15 | 4159682 | PUMP HOUSING HELIX DN50 PN16 1.4301 KIT | 1 |
| 7.3 | 4176513 | > O-RING FOR PUMP JACKET VP. | 1 |
| 15.1 | | > BLASTING PPE HOUSING V-PN16-DN50-304 | 1 |
| 15.2 | 4217893 | > COUNTER FLANGE-G1"1/2-PN16-GJL KIT | 1 |
| 15.3 | 4171321 | > PRIMING/DRAIN PLUG EPDM HELIX KIT | 1 |
| 16 | 4176517 | BASEPLATE V8/10 VP. | 1 |

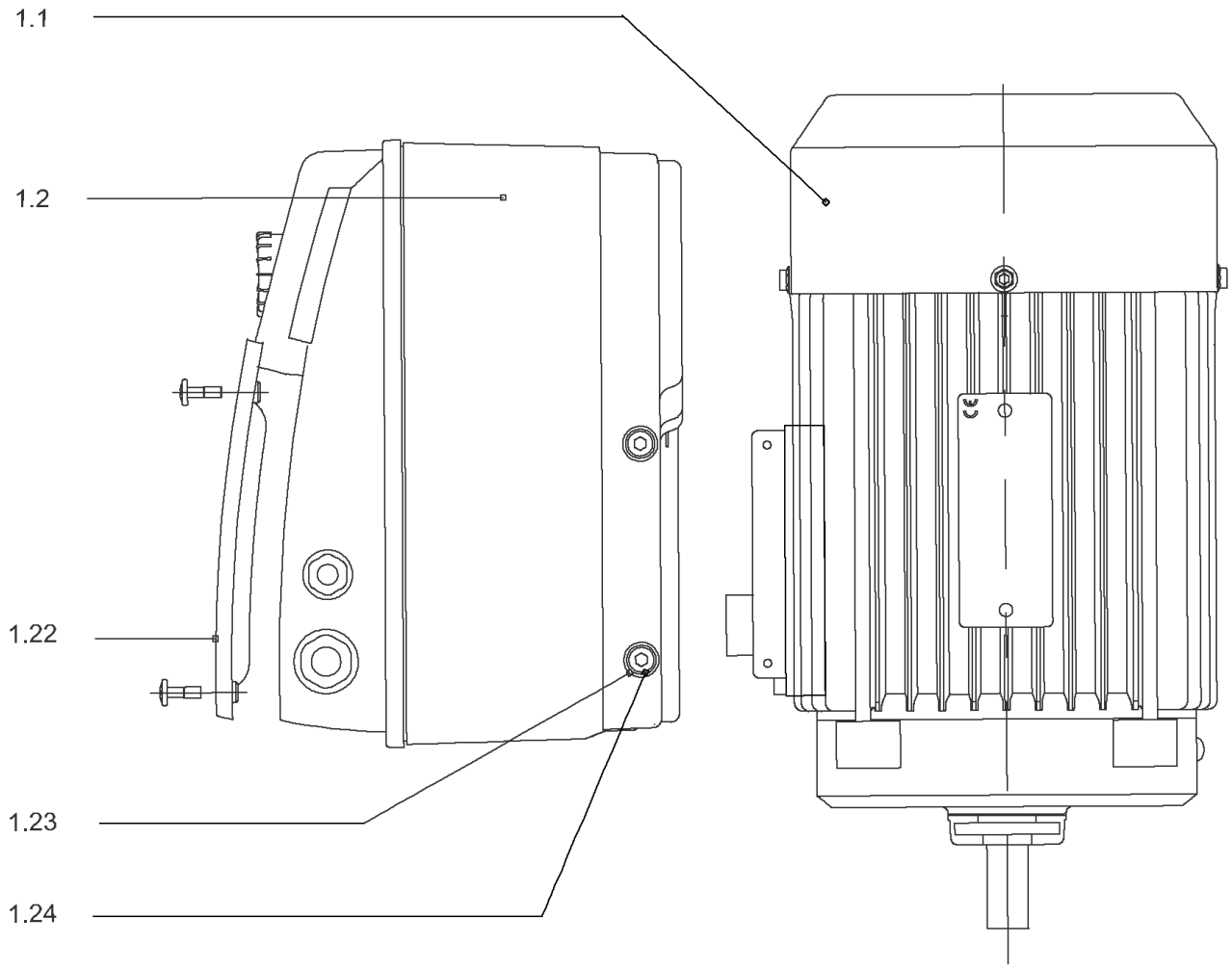
1.1
1.2
1.22
1.23
1.24

## DRIVE HELIX-VE1009-FF24-IE2-ATB KIT

| Item | Article no. | Description | Quantity |
|---|---|---|---|
| 1.1 | | MOTOR 5,5/2/132 FF240 3~380V 60HZ IE2 VP | 1 |
| Note: no longer available/nicht mehrlieferbar/n'est plus disponible | | | |
| | | SPARE PARTS MOTOR:ON REQUEST | 1 |
| 1.2 | 4186781 | MODULE HELIX-VE1009-IE2-ATB KIT | 1 |
| 1.22 | 2111344 | > MODULE COVER/GASKET TL5 KIT | 1 |
| 1.23 | 4215716 | > SCREW M5X16 DIN912 8.8 A2A (4pieces) VP. | 1 |
| 1.24 | 2057978 | > RONDELLE A5,3 DIN6797 FST ZN (4 PIECES) | 1 |

## COUPLING D.16XD.38 FF265 HELIX KIT (4159711)

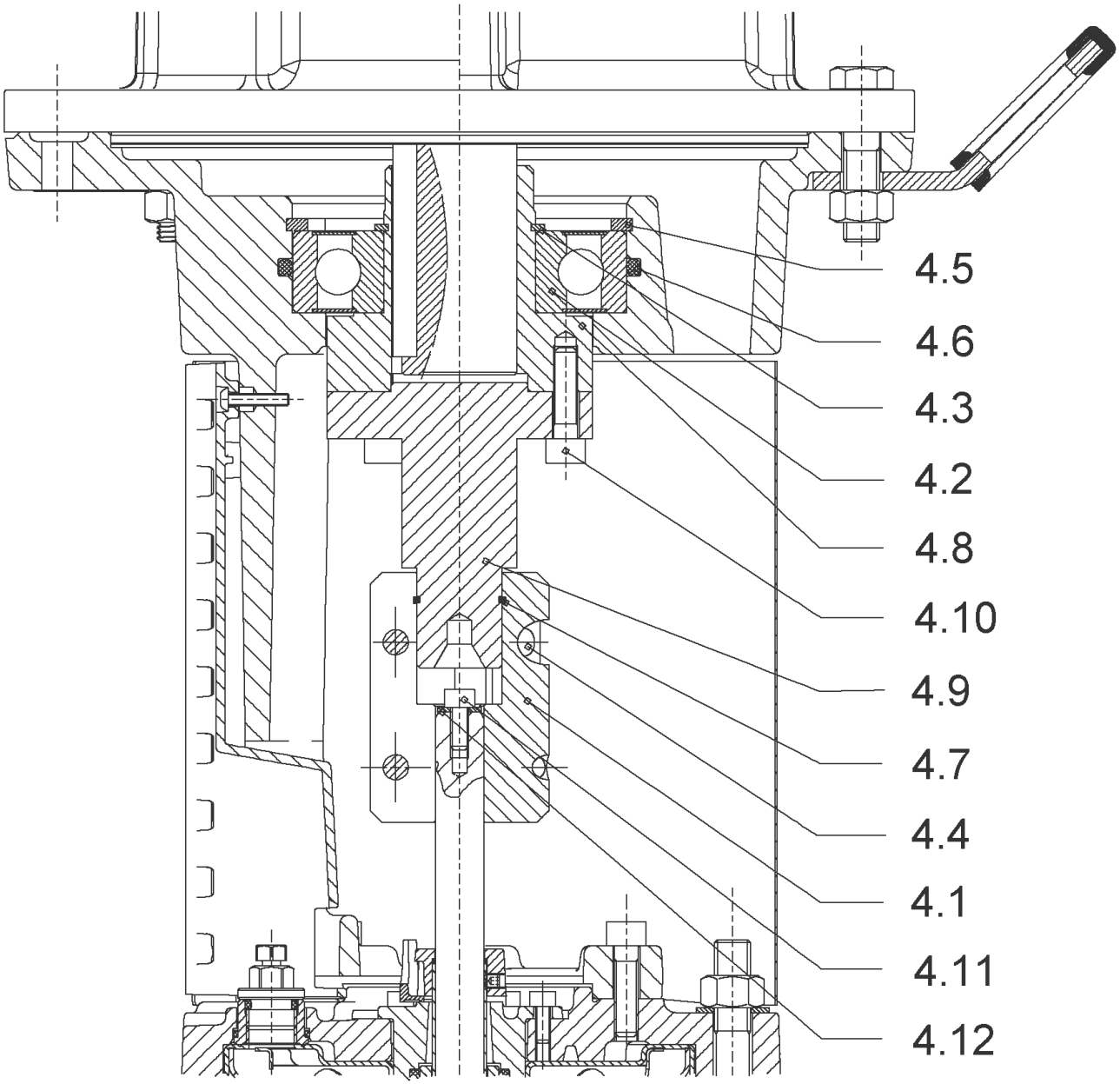

## COUPLING D.16XD.38 FF265 HELIX KIT (4159711)

| Item | Article no. | Description | Quantity |
|---|---|---|---|
| 4.1 | 2131018 | COUPLING 2 PARTS D.16XD.28XL.82,4 VP. | 1 |
| 4.2 | 2131017 | BALL BEARING 6310/ZZ-C4(HT)VP. | 1 |
| 4.3 | 4234253 | CIRCLIP-FOR-SHAFT-D50x2 VP. | 1 |
| 4.4 | 4157726 | SCREW KIT M8X30 (4 PIECES) | 1 |
| 4.5 | 4234255 | CIRCLIPS 110X4 VP. | 1 |
| 4.6 | 4233944 | O-RING ID.110 VP. | 1 |
| 4.7 | 2131019 | RETAINING RING D.26xD.2 DIN7993 VP. | 1 |
| 4.10 | 4157726 | SCREW KIT M8X30 (4 PIECES) | 1 |
| 4.11 | 4102901 | SCREW CHC-M6X14-8.8-ISO4762-GEOMET500A | 1 |
| 4.12 | 2130995 | SERRATED LOCK WASHER D.6,2XD.14,5X28 VP. | 1 |
| | | NOMEL CONTACT WASHER 8x16x1,4 STEEL ZC | 1 |
| 4.8 | 2131020 | HUB D.38XD.50 VP. | 1 |
| 4.9 | 2131021 | SPACER D.28XD.45 VP. | 1 |

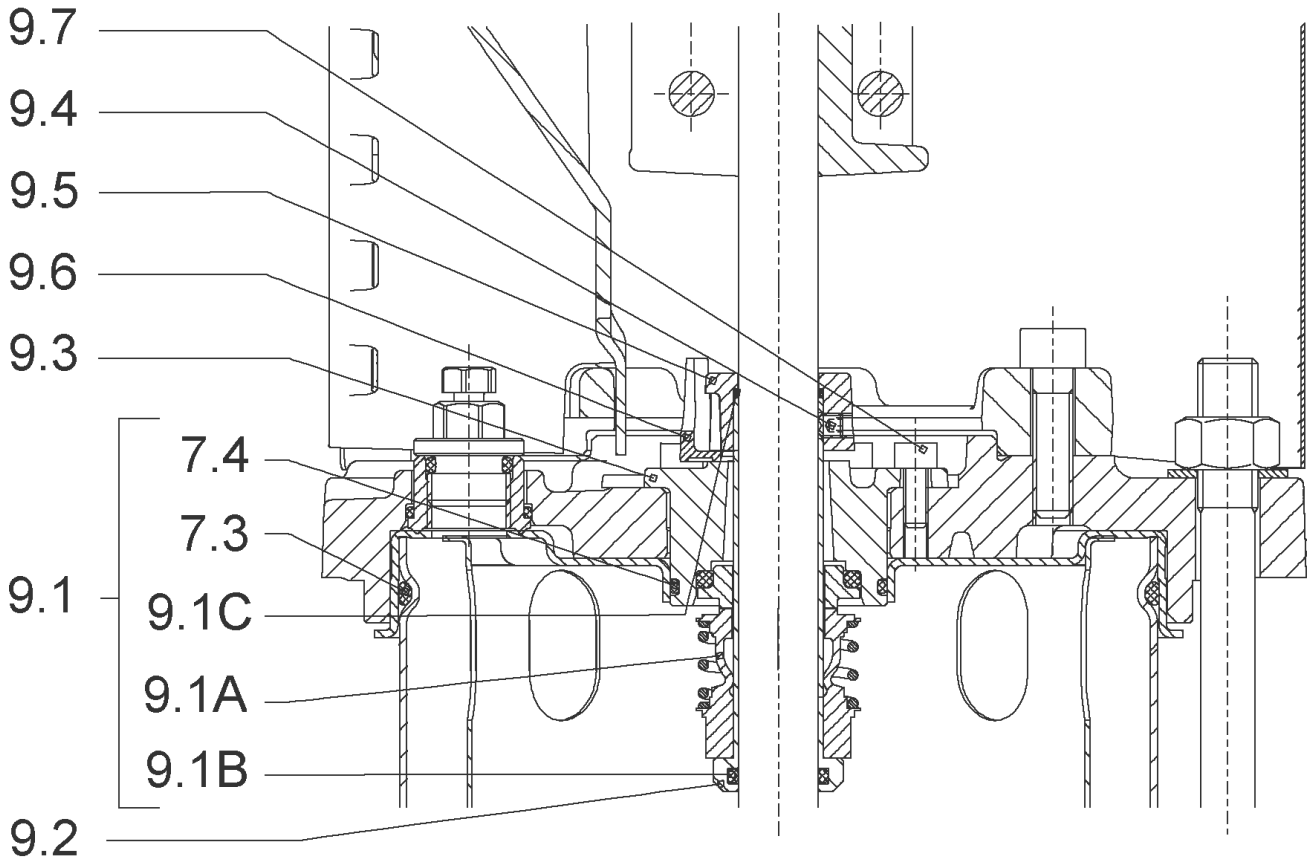
9.7
9.4
9.5
9.6
9.3
7.4
7.3
9.1
9.1C
9.1A
9.1B
9.2

## CARTRIDGE HELIX6-10-16 O/E KIT (4159696)

| Item | Article no. | Description | Quantity |
|---|---|---|---|
| 9.1 | 4159697 | SEAL-KIT-HELIX6-10-16 O/E | 1 |
| 7.3 | 4176513 | > O-RING FOR PUMP JACKET VP. | 1 |
| 7.4 | 2127603 | > O-RING ID.37,6x2,4 EPDM VP. | 1 |
| 9.1A | 2130966 | > MECH.SEAL HELIX2-4-6-10-16 O/E VP. | 1 |
| 9.1B | 2130967 | > O-RING D.16X2,5 EPDM VP. | 1 |
| 9.1C | 4176519 | > O-RING Ø16xØ1.25 VP. | 1 |
| 9.2 | 2130961 | SHAFT SLEEVE D.18/16X72,2 1.4404 VP. | 1 |
| 9.3 | 2130962 | RING HOLDER D.18 G606/G6 1.4301 VP. | 1 |
| 9.4 | 4176520 | SCREW CH M5x5 A4-70 ( 3PIECES ) | 1 |
| 9.5 | 2130963 | DRIVE RING D.29/18x12,4 MACH.VP. | 1 |
| 9.6 | 2130964 | TOOL M.S.CART.HELIX VP. | 1 |
| 9.7 | 2130965 | SCREW CHC M5X12 ISO4762 A2.70(4 PIECES) | 1 |

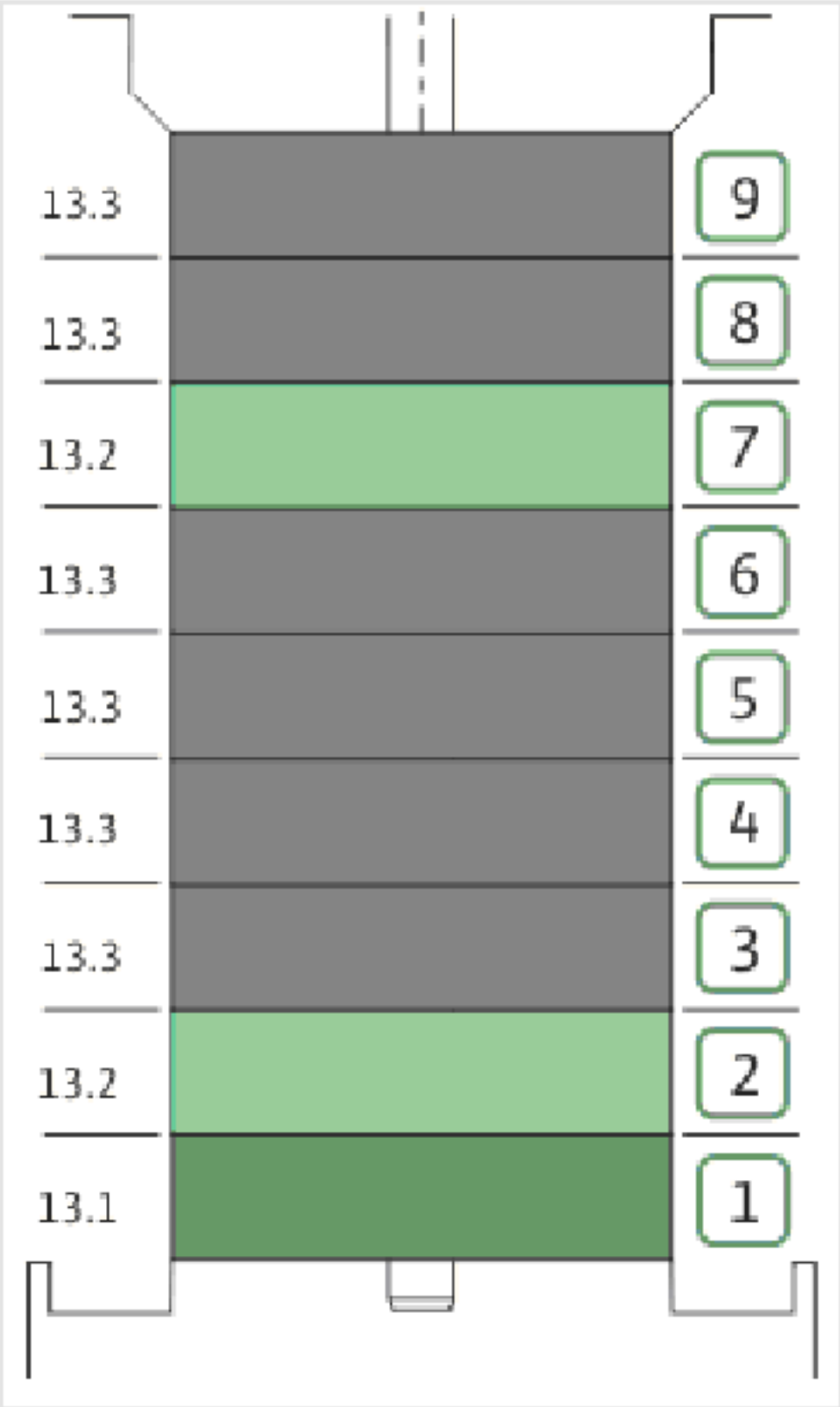
13.3
13.3
13.2
13.3
13.3
13.3
13.3
13.2
13.1
9
8
7
6
5
4
3
2
1

| Item | Article no. | Description | Quantity |
|---|---|---|---|
| 13.1 | 4171331 | STAGE HELIX10 1.4301KIT | 1 |
| | | > MACH.STG-CASING-WOGV-WNR-M+10-304 | 1 |
| | | > IMPELLER-M+10-304 | 1 |
| 13.2 | 4172792 | INTERMEDIATE STAGE HELIX 10 1.4301 KIT | 1 |
| | | > MACH.BEARING-STG-CASING-WNR-M+10-304 | 1 |
| | | > IMPELLER-M+10-304 | 1 |
| | | > SHAFT SLEEVE-SPACER-Ø19,35x18,465-304 | 1 |
| | | > SHAFT-SLEEVE-D16xD20x18-CW | 1 |
| 13.3 | 4172793 | INTERMEDIATE STAGE HELIX 10 1.4301 KIT | 1 |
| | | > MACH.STD-STG-CASING-WGV+NR-M+10-304 | 1 |
| | | > IMPELLER-M+10-304 | 1 |
| | | > IMPELLER SPACER Ø16,05X19,45-L36,465-304 | 1 |

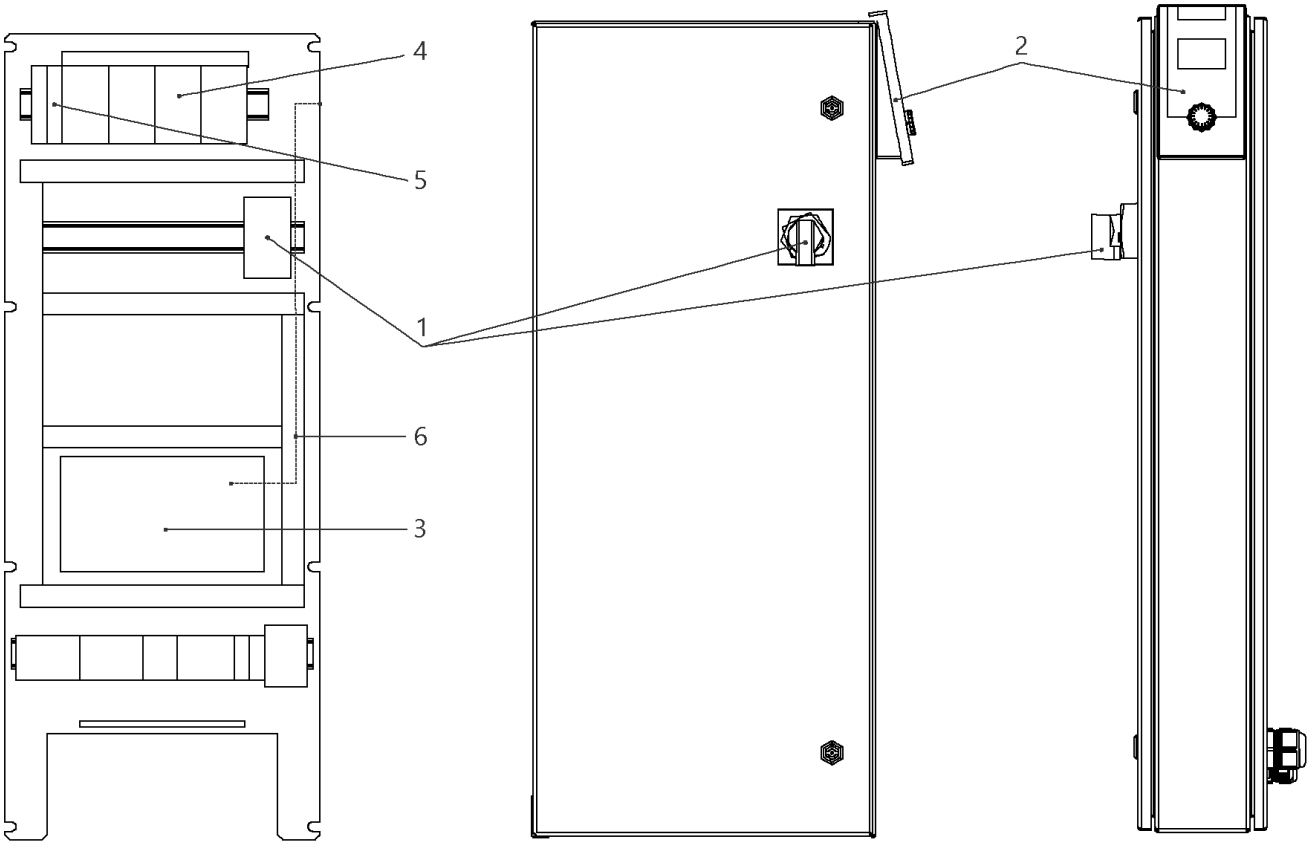
4
5
1
6
3
2

## W-CTRL-SCE-B-4x5,5KW-T4-FM-ND2

| Item | Article no. | Description | Quantity |
|---|---|---|---|
| 1 | 2104477 | MAIN SWITCH OT80F3 L105 KIT | 1 |
| 2 | 4184784 | CONTROL PANEL HMI SC KIT | 1 |
| 2 | 4185259 | ASSEMBLY DISPLAY SC PKG VP. | 1 |
| 3 | 4185257 | ASSEMBLY CPU SCe Booster VP. | 1 |
| 4 | 2051217 | AUTOM.CIRCUIT BREAKER S203 B16 TO7,5kW | 1 |
| 5 | 2046288 | CIRCUIT BREAKER S201 B16 | 1 |
| 6 | 4194956 | PATCH CABLE RJ45 CAT6 1,0M BLUE SC-PANEL | 1 |

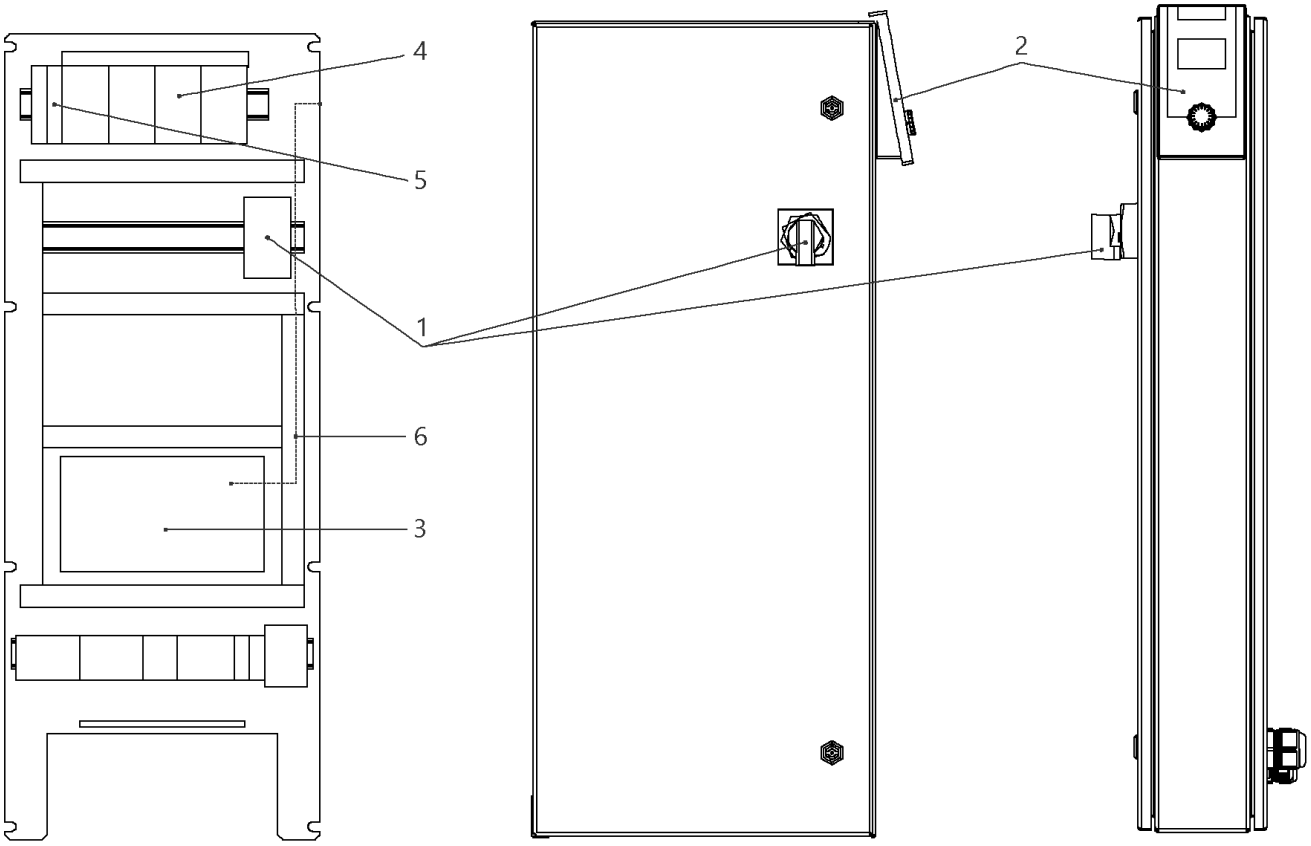
4
5
1
6
3
2

## W-CTRL-SCE-B-4x13A-T34-FM-ND2-AVC-PKG (2541907)

| Item | Article no. | Description | Quantity |
|---|---|---|---|
| 1 | 2104477 | MAIN SWITCH OT80F3 L105 KIT | 1 |
| Note: TO / BIS / JUSQU'AU 30/06/2015 | | | |
| 1 | 2104473 | MAIN SWITCH OT63F3 L105 KIT | 1 |
| Note: FROM / AB / À PARTIR DU 01/07/2015 | | | |
| 2 | 4184784 | CONTROL PANEL HMI SC KIT | 1 |
| 2 | 4185259 | ASSEMBLY DISPLAY SC PKG VP. | 1 |
| Note: DISPLAY ALONE / PLATINE SEULE | | | |
| 3 | 4185257 | ASSEMBLY CPU SCe Booster VP. | 1 |
| 5 | 2046288 | CIRCUIT BREAKER S201 B16 | 1 |
| 4 | 2051217 | AUTOM.CIRCUIT BREAKER S203 B16 TO7,5kW | 1 |
| 6 | 4194956 | PATCH CABLE RJ45 CAT6 1,0M BLUE SC-PANEL | 1 |

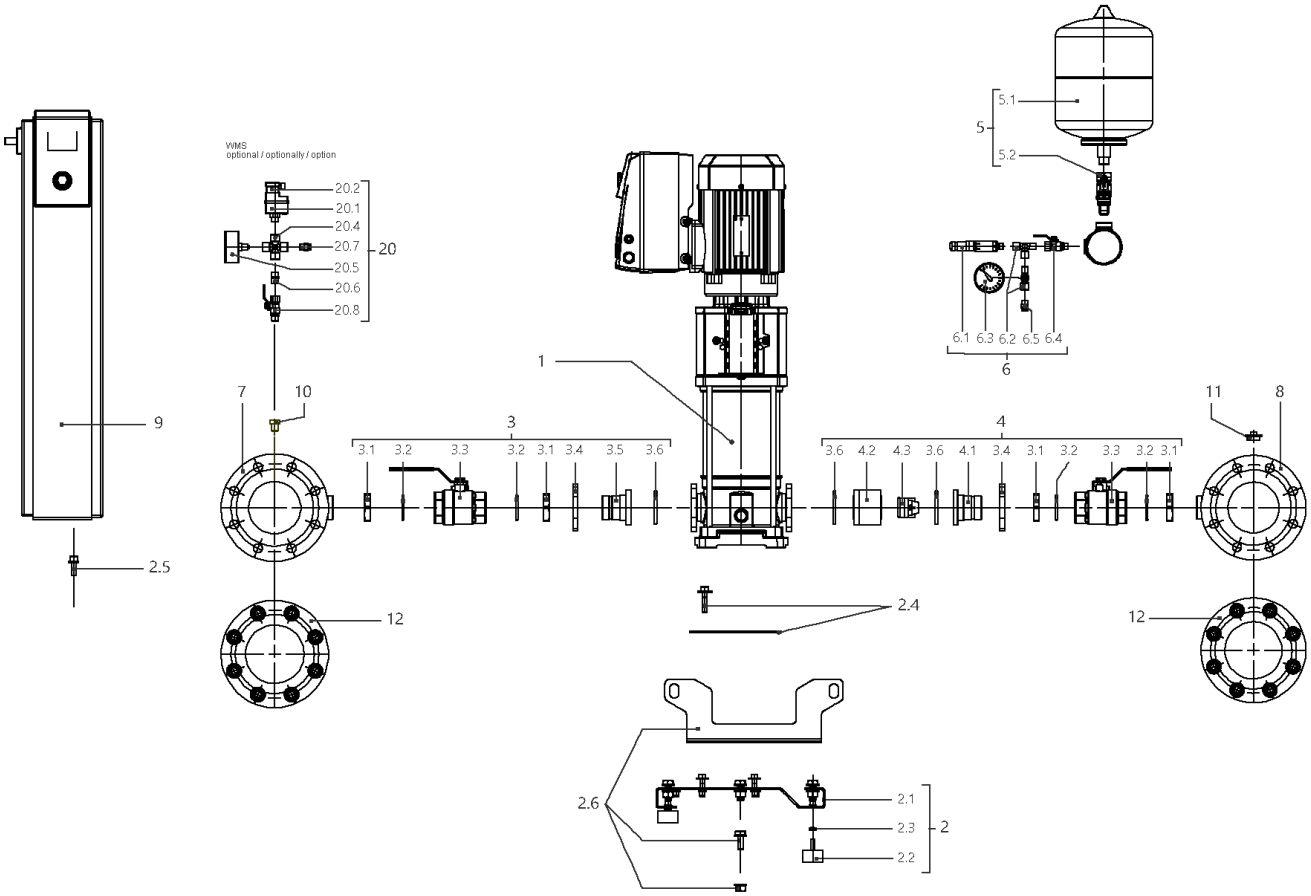
VIMS
optional / optionally / option
20.2
20.1
20.4
20.7
20.5
20.6
20.8
20
5.1
5
5.2
6.1 6.3 6.2 6.5 6.4
6
1
7
10
3
3.1 3.2 3.3 3.2 3.1 3.4 3.5 3.6
4
3.6 4.2 4.3 3.6 4.1 3.4 3.1 3.2 3.3 3.2 3.1
11
8
9
2.5
12
2.4
12
2.6
2.1
2.3
2.2
2

## SiBoost Smart 4HELIX VE1602 (2536341)

| Item | Article no. | Description | Quantity |
|---|---|---|---|
| 1 | | HELIX VE1602-1/16/E/S | 1 |
| Note: TO / BIS / JUSQU'AU 31/03/2016 | | | |
| 1 | 4201557 | HELIX VE1602-1/16/E/S | 1 |
| Note: FROM / AB / À PARTIR DU 01/04/2016 | | | |
| 2 | 4197134 | BASE PLATE DE4 1450x420 KIT | 1 |
| 2.1 | | > BASEPLATE_4x4/6/10/16V_E300_BOX_150 | 1 |
| 2.2 | 2028654 | > VIBRATION DAMPER D.50X30 M10X28 | 1 |
| 2.3 | 2028281 | > NUT M10 DIN936 (ISO4035) 17H VZ | 1 |
| 2.4 | 4197083 | > HOLDER PUMP Helix 10/16 KIT | 1 |
| 2.5 | 4197084 | > HOLDER SWITCHBOX WILO Smart Control KIT | 1 |
| 2.6 | 4197117 | > LIFTING Siboost HELIX SC KIT | 1 |
| 3 | 4197072 | SUCTION SIDE Siboost Helix10/16 KIT | 1 |
| 3.1 | 2032623 | > NUT G1 1/2"SW55 MS | 1 |
| 3.2 | 2032616 | > O-RING ID.44X3,53N DIN3771 E7502 | 1 |
| 3.2 | 2534877 | > BALL TAP KDW40-H G11/2I-I-DN40 DVGW | 1 |
| 3.4 | 2032626 | > OVAL FLANGE D52-LK100 ST-VZ | 1 |
| 3.5 | 2032627 | > UNION INSERT DN40 LAPPED FLANGE | 1 |
| 3.6 | 2032628 | > O-RING ID.56,52X5,33N DIN3771 E7502 | 1 |
| 4 | 4197829 | DELIVERY SIDE Siboost Helix V16 KIT | 1 |
| 3.1 | 2032623 | > NUT G1 1/2"SW55 MS | 1 |
| 3.2 | 2032616 | > O-RING ID.44X3,53N DIN3771 E7502 | 1 |
| 3.3 | 2534877 | > BALL TAP KDW40-H G11/2I-I-DN40 DVGW | 1 |
| 3.4 | 2032626 | > OVAL FLANGE D52-LK100 ST-VZ | 1 |
| 4.1 | 2054274 | > UNION INSERT DN40 LAPPED FLANGE(W.COLLAR | 1 |
| 4.2 | 2054270 | > HOUSING RFV(RV-IN) DN50 MS VP. | 1 |
| 4.3 | 2028284 | > NON-RETURN DEVICE UNIT NV50/DN50 VP. | 1 |
| 3.6 | 2032628 | > O-RING ID.56,52X5,33N DIN3771 E7502 | 1 |
| 5 | 2032642 | DIAPHREM TANK 8L/PN16 DIN4807/T5 KIT | 1 |
| 5.1 | 2045914 | > DIAPHREM TANK 8L TYP-DD 16BAR | 1 |
| 5.2 | 2027853 | > FLOW FITTING G3/4 FOR DIAPHRAGM VES. | 1 |
| 6 | 4197076 | PRESSURE SENSOR/ GAUGE 0-16BAR KIT | 1 |
| 6.1 | 2085909 | > PRESS.SENSOR 1/4" 0-16BAR 4-20MA VP. | 1 |
| 6.2 | 4197077 | > T-PIECE 1/4" VP. | 1 |
| 6.3 | 2028692 | > PRESSURE GAUGE NG63-PN16-G1/4 | 1 |

| Item | Article no. | Description | Quantity |
|---|---|---|---|
| 6.4 | 2028291 | > BALL TAP R1/4" PN42 GIACOMINI R254DL | 1 |
| 6.5 | 2028691 | > BLOWGUN 1/4" MS 30BAR VP. | 1 |
| 7 | 4197836 | PIPE DE4 DN100-4x11/2"+2x1/4x1200 VP. | 1 |
| 8 | 4197837 | PIPE DE4 DN100-4x11/2"+2x1/4+1x3/4x1200 | 1 |
| 9 | | W-CTRL-SCE-B-4x2,2KW-T4-FM-ND2 | 1 |
| Note: TO / BIS / JUSQU'AU 18/05/2014 | | | |
| 9 | 2541903 | W-CTRL-SCE-B-4x10A-T34-FM-ND2-AVC-PKG | 1 |
| Note: FROM / AB / À PARTIR DU 19/05/2014 | | | |
| 10 | 4197079 | PLUG G1/4"x10 AISI304 KIT | 1 |
| 11 | 2032654 | PLUG R3/4" MS VIEGA 1751 | 1 |
| 12 | 4197835 | BLIND-FLANGE DN100 PN16 -1.4404 KIT | 1 |
| | 2106342 | > FLAT GASKET D.120/162X2 DN100 C4430 VP. | 1 |
| | | > NUT M16 DIN934 A2 1.4301 | 1 |
| | | > SCREW M16x70 DIN933 A2 (8 PIECES) | 1 |
| | | > WASHER A17 DIN125 A2 | 1 |
| | | > FULL FLANGE ST.DN100 PN16 EN1092-1/05 A | 1 |
| | | > FLANGE COVER DN100 DIN 3443 FORM A | 1 |
| 20 | | ASSEMBLY WMS. DE-EB. +VP | 1 |
| 20.1 | 2028652 | > PRESSURE SWITCH PS3-ASR 1/(1,3) VP. | 1 |
| 20.2 | 2130983 | > PLUG PS3-415 WITH KABEL 1,5M 2NO VP. | 1 |
| 20.4 | 2028290 | > CROSSPIECE R1/4" MS-NICKEL | 1 |
| 20.5 | 2028687 | > PRESSURE GAUGE NG63 R1/4" HI.0-6BAR | 1 |
| 20.6 | 2054268 | > DUAL NIPPLE G1/4" x G1/4" MS VP. | 1 |
| 20.7 | 2028691 | > BLOWGUN 1/4" MS 30BAR VP. | 1 |
| 20.8 | 2028291 | > BALL TAP R1/4" PN42 GIACOMINI R254DL | 1 |

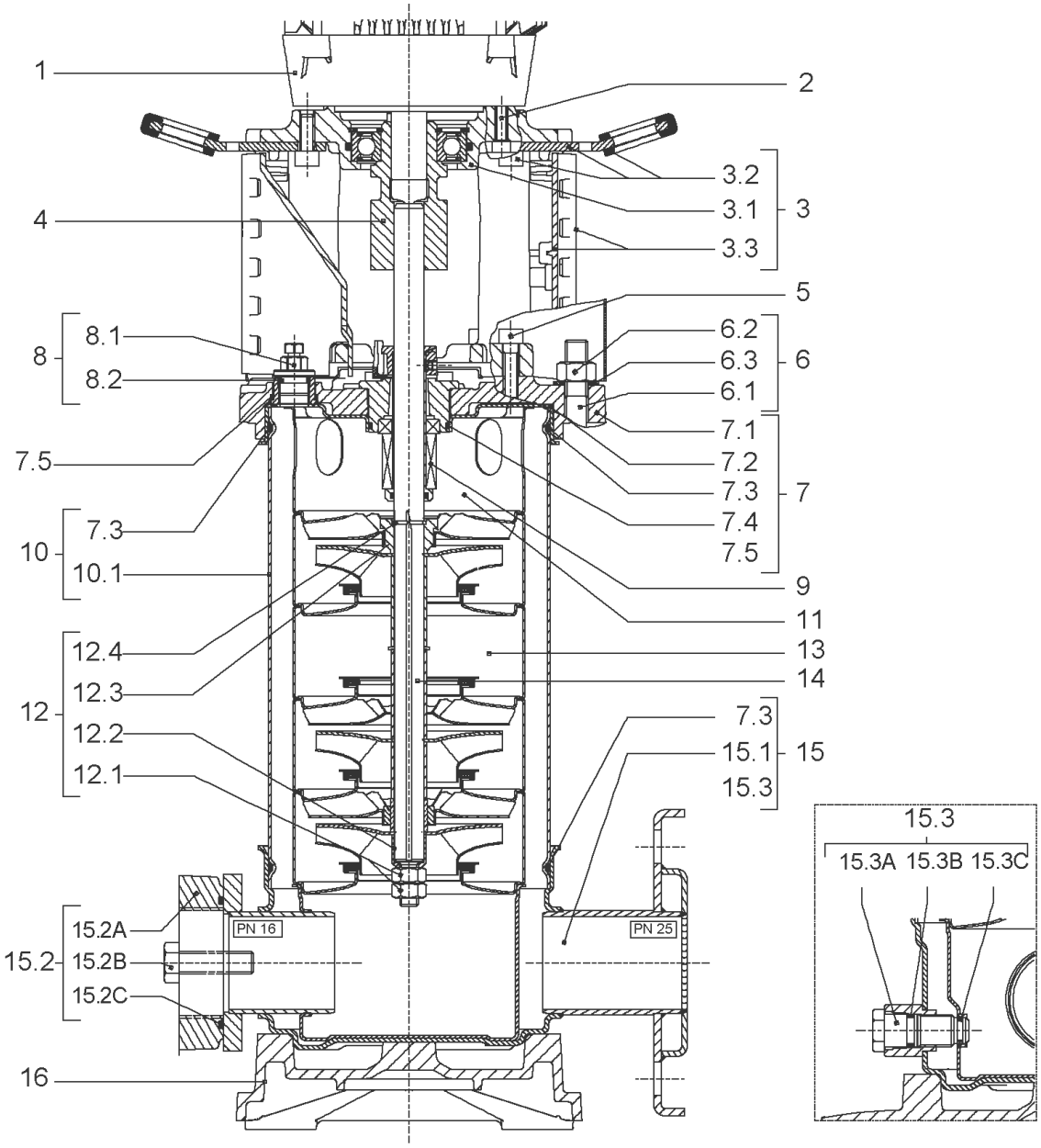
1
2
3.2
3.1
3
3.3
4
5
8.1
8
8.2
6.2
6.3
6
6.1
7.1
7.5
7.2
7.3
7
7.4
7.3
10
7.5
10.1
9
11
12.4
13
12.3
14
12
12.2
7.3
15.1
15
12.1
15.3
15.3
15.3A 15.3B 15.3C
15.2A
PN 16
PN 25
15.2
15.2B
15.2C
16

| Item | Article no. | Description | Quantity |
|---|---|---|---|
| 1 | | DRIVE HELIX-VE1602-IE2-ATB KIT | 1 |
| Note: MOTOR BRAND ATB | | | |
| 1 | | DRIVE HELIX-VE1602-IE2-WE KIT | 1 |
| Note: MOTOR BRAND WILO ELEC | | | |
| 1 | | DRIVE HELIX-VE1602-IE4-WE KIT | 1 |
| Note: MOTOR BRAND WILO ELEC | | | |
| 2 | 4159703 | SCREW M8X40 (4 PIECES) | 1 |
| 3 | 4172795 | LANTERNE FT115 HELIX KIT | 1 |
| 3.1 | | > M+5_6_LANTERN_ONE-PIECE_FT115_CATA | 1 |
| 3.2 | 2127604 | > EYELET CPL.FT HELIX(2 PIECES) | 1 |
| 3.3 | 4159692 | > COUPLING PROTECTOR FT HELIX KIT | 1 |
| 4 | 4159709 | COUPLING D.16xD.24 FT115 HELIX KIT | 1 |
| 5 | 4159707 | SCREW M8X30 (4 PIECES) | 1 |
| 6 | 2018368 | STUD BOLT M12X289 KIT | 1 |
| 6.1 | | > TIE BOLT M12-289x18x30-1.4057 | 1 |
| 6.2 | 2094647 | > NUT M12 M12 ISO4032 VP. | 1 |
| 6.3 | 2123557 | > WASHER CS-12.4-24-1.6-NFE25 (4 PIECES) | 1 |
| 7 | 4210143 | STATIONARY RING HOLDER HELIX 6" EPDM | 1 |
| 7.2 | 2127607 | > STATIONARY RING HOLDER 6" HELIX 1.4301 V | 1 |
| 7.3 | 4176513 | > O-RING FOR PUMP JACKET VP. | 1 |
| 7.4 | 2127603 | > O-RING ID.37,6x2,4 EPDM VP. | 1 |
| 7.5 | 2127602 | > O-RING ID.21,35x2 EPDM VP. | 1 |
| 8 | 4159686 | FILING/PURGING PLUG HELIX EPDM KIT | 1 |
| 9 | 4171327 | SEAL-KIT-HELIX6-10-16 O/E KIT | 1 |
| 10 | 2127574 | HOUSING PIPE D.152x160 1.4301 KIT | 1 |
| 7.3 | 4176513 | > O-RING FOR PUMP JACKET VP. | 1 |
| 10.1 | | > HOUSING-PIPE Ø152-M+1601/02-304 | 1 |
| 11 | 2127588 | CENTERING STAGE-RETURN HELIX16 1.4301 VP | 1 |
| 12 | 4209329 | SHAFT EQUIPMENT HELIX V16 KIT | 1 |
| 12.1 | | > NUT-H-M10-A4.70 | 1 |
| 12.2 | | > SERRATED LOCK WASHER M+16M3-316L | 1 |
| 12.3 | | > IMPELLER STOP RING L35,9-304 | 1 |
| 12.4 | | > STOP-RUSH-1/2-D16xd2-M+316 | 1 |
| 13 | | HYDRAULIC HELIX V 1602 1.4307 | 1 |

| Item | Article no. | Description | Quantity |
|---|---|---|---|
| 14 | 2127563 | SHAFT D.16X280 1.4301 VP. | 1 |
| 15 | 4217899 | PUMP HOUSING HELIX DN50 PN16 1.4301 KIT | 1 |
| 7.3 | 4176513 | > O-RING FOR PUMP JACKET VP. | 1 |
| 15.1 | | > BLASTING PPE HOUSING V-PN16-DN50-304 | 1 |
| 15.2 | 4217895 | > COUNTER FLANGE-G2"-PN16-GJL KIT | 1 |
| 15.3 | 4171321 | > PRIMING/DRAIN PLUG EPDM HELIX KIT | 1 |
| 16 | 2127601 | BASEPLATE HELIX V16 VP. | 1 |

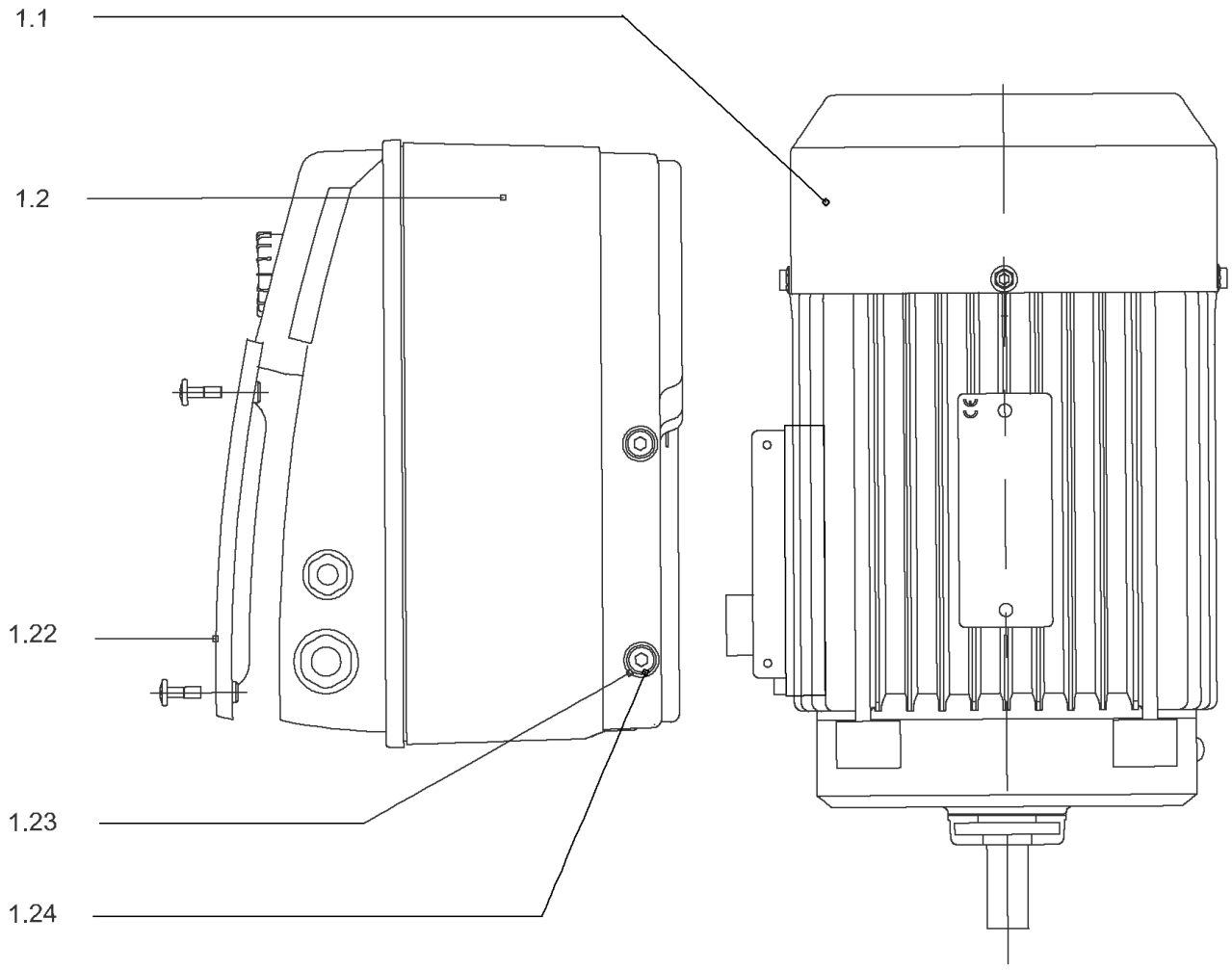
1.1
1.2
1.22
1.23
1.24

## DRIVE HELIX-VE1602-IE2-ATB KIT

| Item | Article no. | Description | Quantity |
|---|---|---|---|
| 1.1 | | M2,2-2T638P55V18-90F11-SU-N24-ADAPT-IE2 | 1 |
| Note: no longer available/nicht mehrlieferbarn'est plus disponible | | | |
| | | SPARE PARTS MOTOR:ON REQUEST | 1 |
| 1.2 | 4220618 | MODULE HELIX-VE1602-IE2-ATB KIT | 1 |
| 1.22 | 2054227 | > MODULE COVER/GASKET TL3/4 KIT | 1 |
| 1.23 | 4215716 | > SCREW M5X16 DIN912 8.8 A2A (4pieces) VP. | 1 |
| 1.24 | 2057978 | > RONDELLE A5,3 DIN6797 FST ZN (4 PIECES) | 1 |

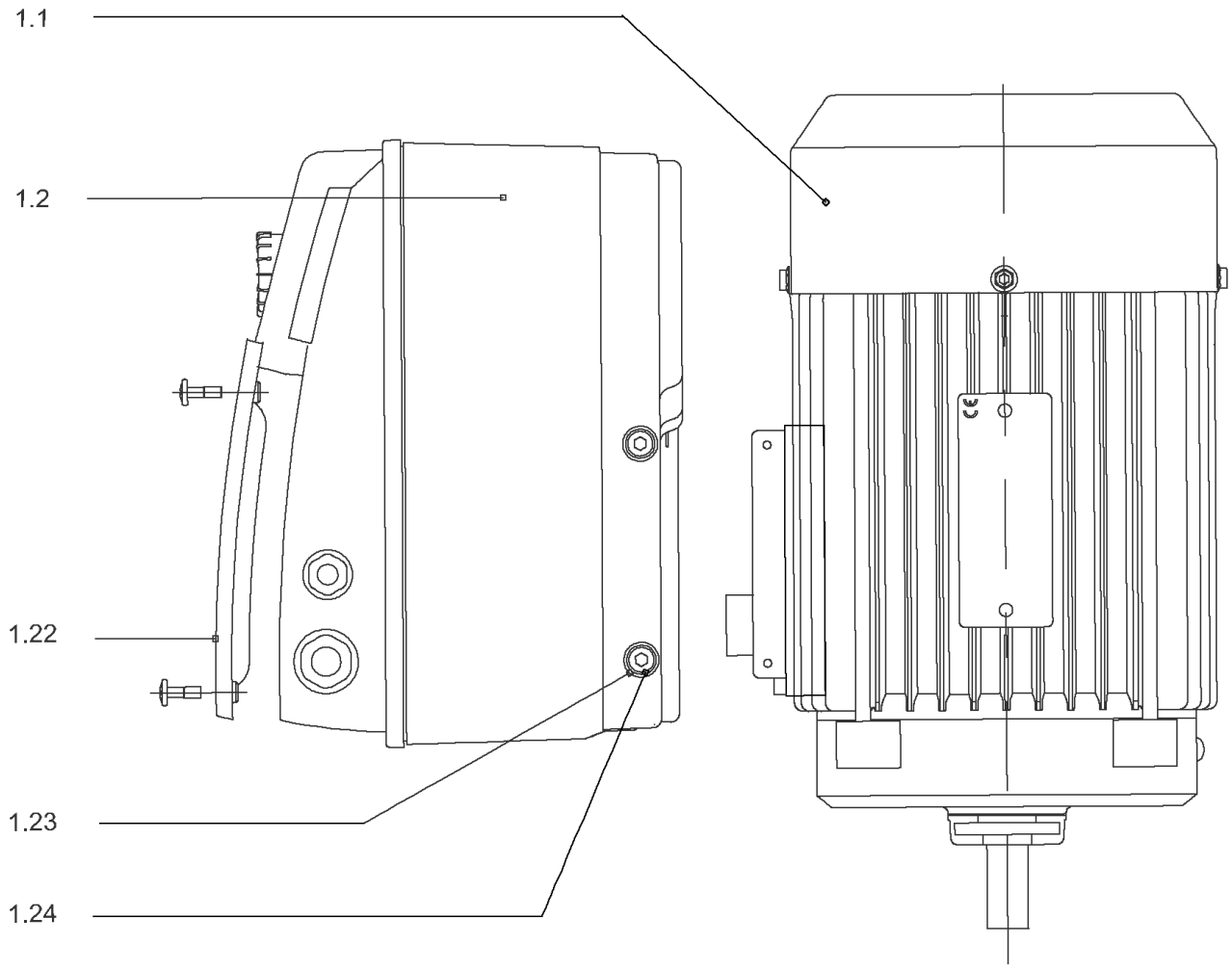
1.1
1.2
1.22
1.23
1.24

## DRIVE HELIX-VE1602-IE2-WE KIT

| Item | Article no. | Description | Quantity |
|---|---|---|---|
| 1.1 | 4185016 | MOTOR 2,2/2/90 3~ 380V 60HZ IE2 WE VP. | 1 |
| | | SPARE PARTS MOTOR:ON REQUEST | 1 |
| 1.2 | 4185020 | MODULE HELIX-VE1602-IE2-WE KIT | 1 |
| 1.22 | 2054227 | > MODULE COVER/GASKET TL3/4 KIT | 1 |
| 1.23 | 4215716 | > SCREW M5X16 DIN912 8.8 A2A (4pieces) VP. | 1 |
| 1.24 | 2057978 | > RONDELLE A5,3 DIN6797 FST ZN (4 PIECES) | 1 |

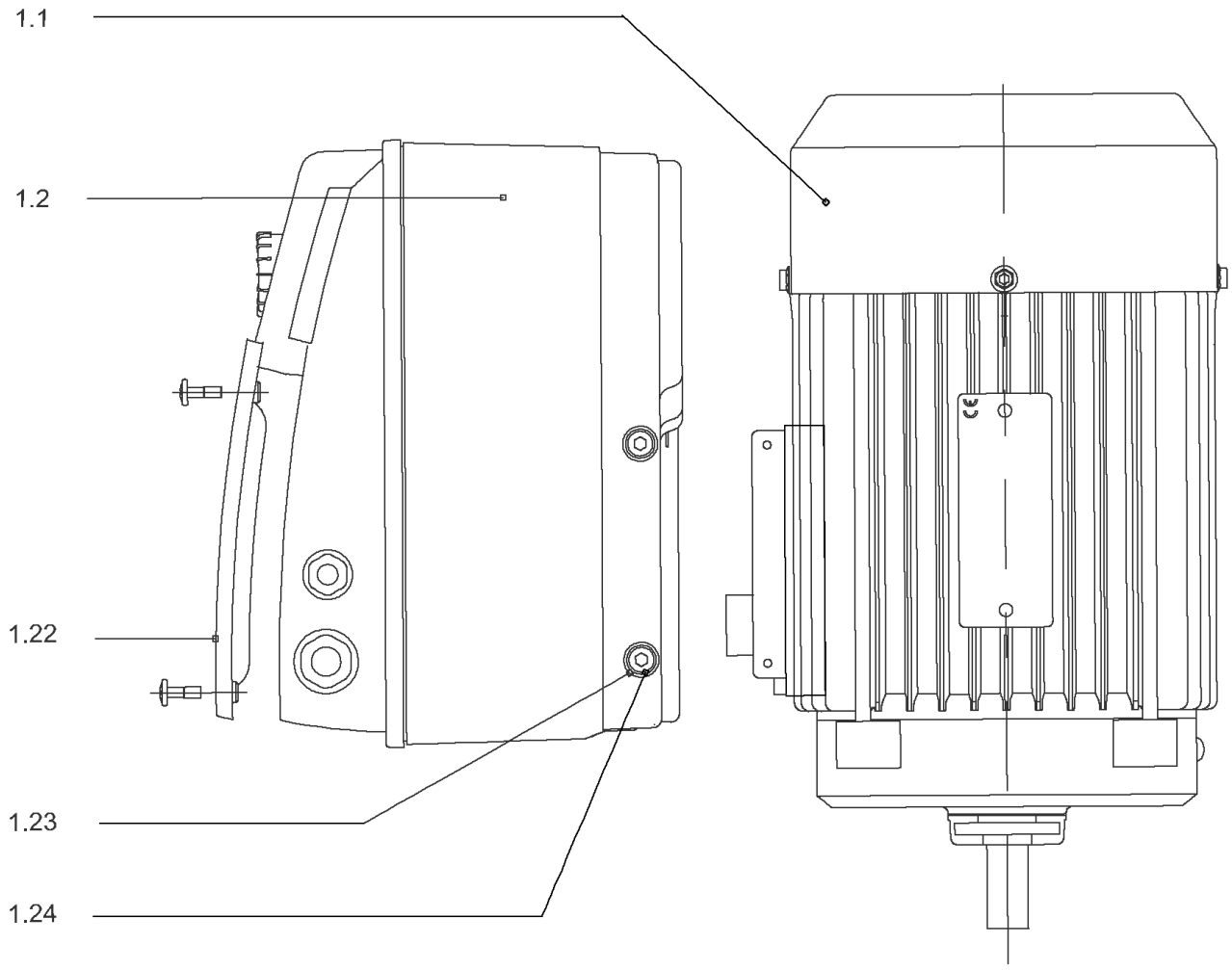
1.1
1.2
1.22
1.23
1.24

## DRIVE HELIX-VE1602-IE4-WE KIT

| Item | Article no. | Description | Quantity |
|---|---|---|---|
| 1.1 | 4207920 | MOTOR 2.2/2/90 3~ 380V 60HZ IE4 WE VP. | 1 |
| | | SPARE PARTS MOTOR:ON REQUEST | 1 |
| 1.2 | 4209593 | MODULE HELIX-VE1602-IE4-WE KIT | 1 |
| 1.22 | 2054227 | > MODULE COVER/GASKET TL3/4 KIT | 1 |
| 1.23 | 4215716 | > SCREW M5X16 DIN912 8.8 A2A (4pieces) VP. | 1 |
| 1.24 | 2057978 | > RONDELLE A5,3 DIN6797 FST ZN (4 PIECES) | 1 |

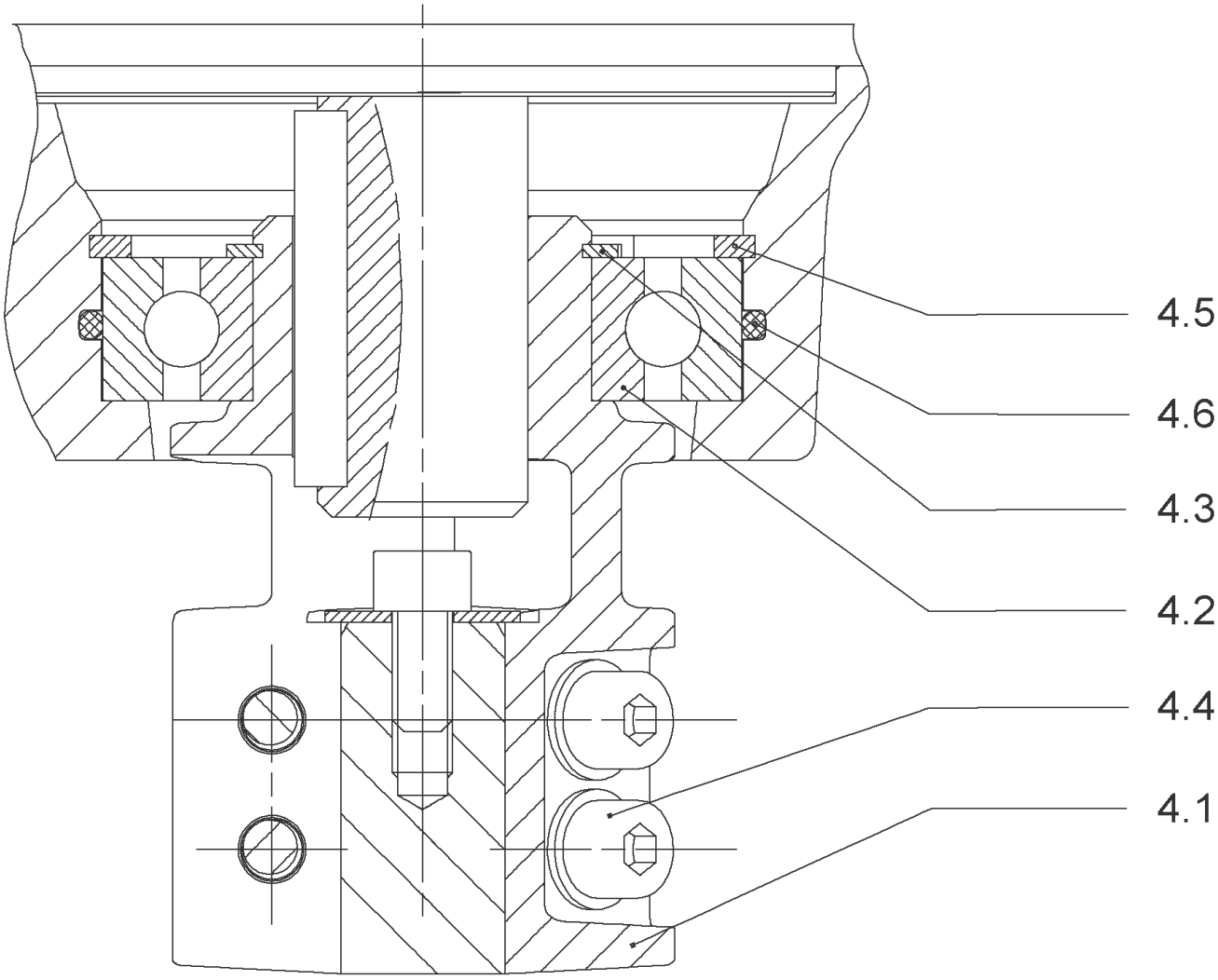
4.5
4.6
4.3
4.2
4.4
4.1

## COUPLING D.16xD.24 FT115 HELIX KIT (4159709)

| Item | Article no. | Description | Quantity |
|---|---|---|---|
| 4.1 | | COUPLING M+ Ø16XØ24 FT115 MACHINED | 1 |
| 4.2 | 2131023 | BALL BEARING 6207/ZZ-C3(HT)VP. | 1 |
| 4.3 | 4234254 | CIRCLIP-FOR-SHAFT-D35x1.5 VP. | 1 |
| 4.4 | 4157726 | SCREW KIT M8X30 (4 PIECES) | 1 |
| 4.5 | 4234251 | CIRCLIP-D72x2.5 VP. | 1 |
| 4.6 | 4234246 | O-RING 72X3 VP. | 1 |
| | | NOMEL CONTACT WASHER 8x16x1,4 STEEL ZC | 1 |

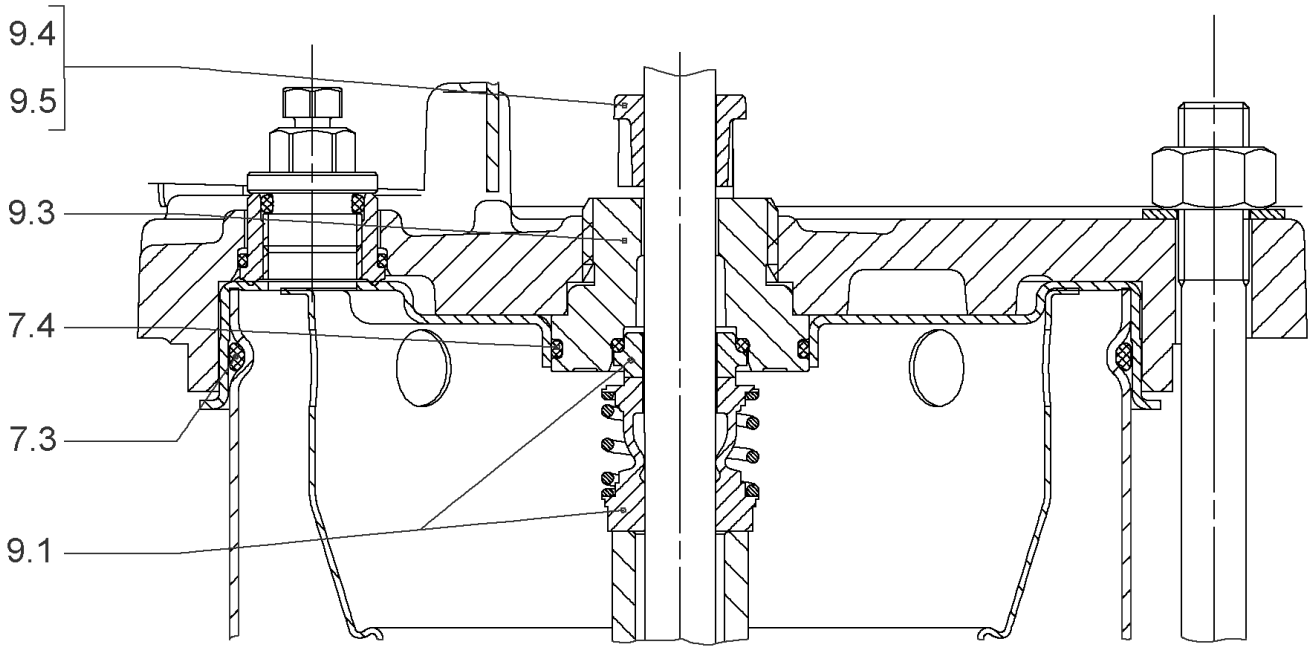
9.4
9.5
9.3
7.4
7.3
9.1

## SEAL-KIT-HELIX6-10-16 O/E KIT (4171327)

| Item | Article no. | Description | Quantity |
|---|---|---|---|
| 7.3 | 4176513 | O-RING FOR PUMP JACKET VP. | 1 |
| 7.4 | 2127603 | O-RING ID.37,6x2,4 EPDM VP. | 1 |
| 9.1 | 4177801 | MECH.SEAL HELIX6-10-16 O/E VP. | 1 |
| 9.3 | 4177798 | MACHINED RING HOLDER M+6" Ø16 304 VP. | 1 |
| 9.5 | 4177799 | MACHINED DRIVE RING Ø16 VP. | 1 |
| 9.4 | 4176520 | SCREW CH M5x5 A4-70 ( 3PIECES ) | 1 |

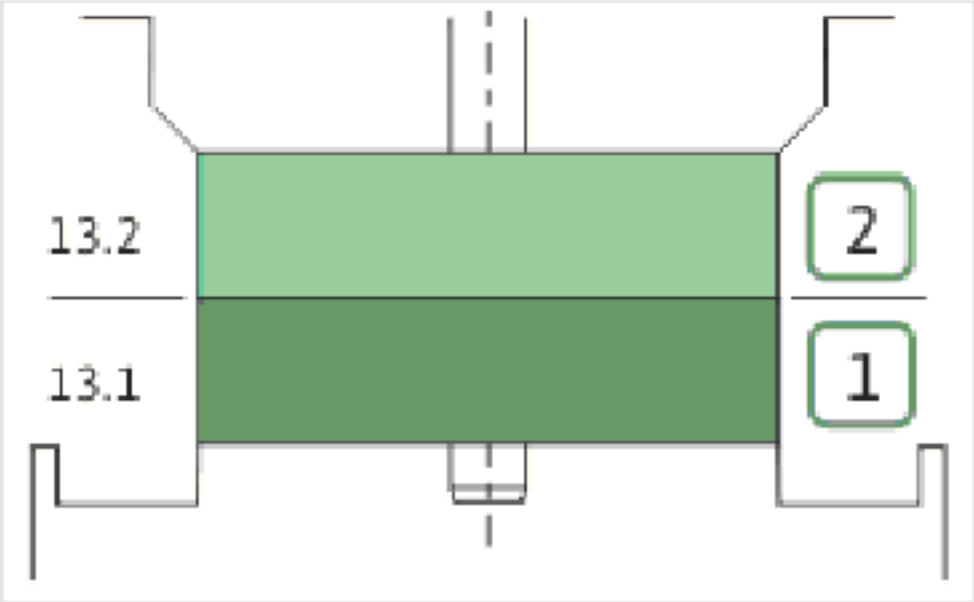
13.2
13.1
2
1

| Item | Article no. | Description | Quantity |
|---|---|---|---|
| 13.1 | 4159720 | STAGE HELIX 16 1.4301 KIT | 1 |
| | | > MACH.STG-CASING-WOGV-WNR-M+16-304 | 1 |
| | | > IMPELLER-M+16-304 | 1 |
| 13.2 | 4159714 | STAGE BEARING HELIX 16 1.4301 KIT | 1 |
| | | > MACH.BEARING-STG-CASING-WNR-M+16-304 | 1 |
| | | > IMPELLER-M+16-304 | 1 |
| | | > SLEEVE-SPACER-Ø19,35x30,665-304 | 1 |
| | | > SHAFT-SLEEVE-D16xD20x18-CW | 1 |

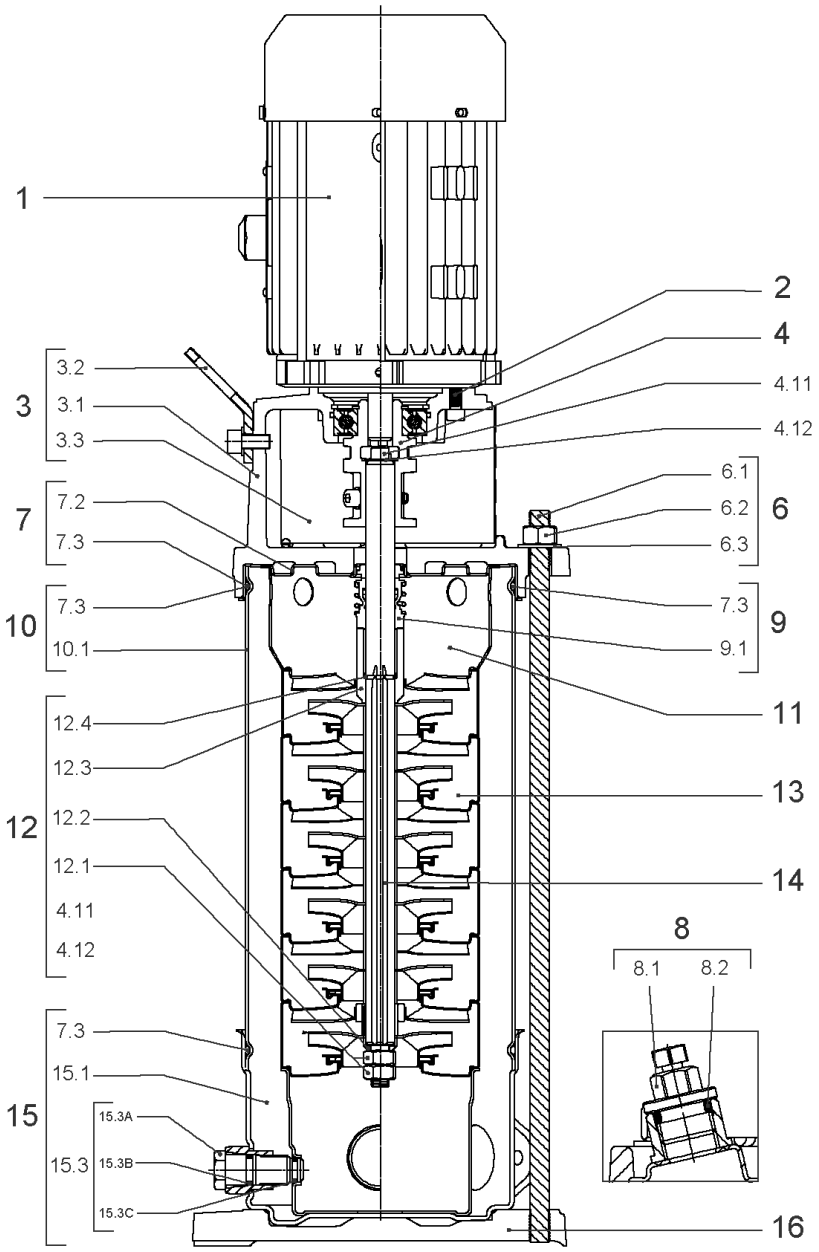
1
2
4
4.11
4.12
3
3.2
3.1
3.3
7
7.2
7.3
10
7.3
10.1
6
6.1
6.2
6.3
9
7.3
9.1
11
12
12.4
12.3
12.2
12.1
4.11
4.12
13
14
8
8.1
8.2
15
7.3
15.1
15.3
15.3A
15.3B
15.3C
16

## HELIX VE1602-1/16/E/S (4201557)

| Item | Article no. | Description | Quantity |
|---|---|---|---|
| 1 | | DRIVE HELIX-VE1602-IE4-WE KIT | 1 |
| Note: MOTOR BRAND WILO ELEC | | | |
| | | SPARE PARTS MOTOR:ON REQUEST | 1 |
| 2 | 4159707 | SCREW M8X30 (4 PIECES) | 1 |
| 3 | 4213784 | LANTERN FT115 HELIX KIT | 1 |
| 3.1 | | > LANT-MOT-VMI-ReDTC6"-FT115-MACHINED+CATA | 1 |
| 3.2 | 4184852 | > EYELET CPL.FT HELIX (2 PIECES) | 1 |
| 3.3 | 4213782 | > COUPLING PROTECTOR FT115/130 HELIX KIT | 1 |
| 4 | 4159709 | COUPLING D.16xD.24 FT115 HELIX KIT | 1 |
| 6 | 2018368 | STUD BOLT M12X289 KIT | 1 |
| 6.1 | | > TIE BOLT M12-289x18x30-1.4057 | 1 |
| 6.2 | 2094647 | > NUT M12 M12 ISO4032 VP. | 1 |
| 6.3 | 2123557 | > WASHER CS-12.4-24-1.6-NFE25 (4 PIECES) | 1 |
| 7 | 4214481 | STATIONARY RING HOLDER HELIX D27 ReDTC | 1 |
| 7.2 | 4214479 | > STATIONARY RING HOLDER HELIX D27 VP. | 1 |
| 7.3 | 4176513 | > O-RING FOR PUMP JACKET VP. | 1 |
| 8 | 4212724 | FILING/PURGING PLUG HELIX ReDTC KIT | 1 |
| 8.1 | | > FILLING PLUG MVI6"-304 | 1 |
| 8.2 | 4177800 | > O-RING EPDM PLUG HELIX VP. | 1 |
| 9 | 4214483 | MECH.SEAL HELIX6-10-16 O/E ReDTC KIT | 1 |
| 9.1 | 4177801 | > MECH.SEAL HELIX6-10-16 O/E VP. | 1 |
| 7.3 | 4176513 | > O-RING FOR PUMP JACKET VP. | 1 |
| 10 | 2127574 | HOUSING PIPE D.152x160 1.4301 KIT | 1 |
| 7.3 | 4176513 | > O-RING FOR PUMP JACKET VP. | 1 |
| 10.1 | | > HOUSING-PIPE Ø152-M+1601/02-304 | 1 |
| 11 | 2127588 | CENTERING STAGE-RETURN HELIX16 1.4301 VP | 1 |
| 12 | 4214520 | SHAFT EQUIPMENT HELIX V16 ReDTC KIT | 1 |
| 12.1 | | > NUT-H-M10-A4.70 | 1 |
| 12.2 | | > SERRATED LOCK WASHER M+16M3-316L | 1 |
| 12.3 | | > 1/2-SNAP-RING-16M3-316L | 1 |
| 12.4 | | > STOP-RUSH-1/2-D16xd2-M+316 | 1 |
| 4.11 | | > SCREW CHC-M6X14-8.8-ISO4762-GEOMET500A | 1 |
| 4.12 | | > WASHER D.24 L6U ZINK | 1 |
| 13 | | HYDRAULIC HELIX V 1602 1.4307 | 1 |

| Item | Article no. | Description | Quantity |
|---|---|---|---|
| 14 | 4214522 | SHAFT D.16X228 HELIX 1.4057 VP. | 1 |
| 15 | 4217899 | PUMP HOUSING HELIX DN50 PN16 1.4301 KIT | 1 |
| 7.3 | 4176513 | > O-RING FOR PUMP JACKET VP. | 1 |
| 15.1 | | > BLASTING PPE HOUSING V-PN16-DN50-304 | 1 |
| 15.2 | 4217895 | > COUNTER FLANGE-G2"-PN16-GJL KIT | 1 |
| 15.3 | 4171321 | > PRIMING/DRAIN PLUG EPDM HELIX KIT | 1 |
| 16 | 2127601 | BASEPLATE HELIX V16 VP. | 1 |

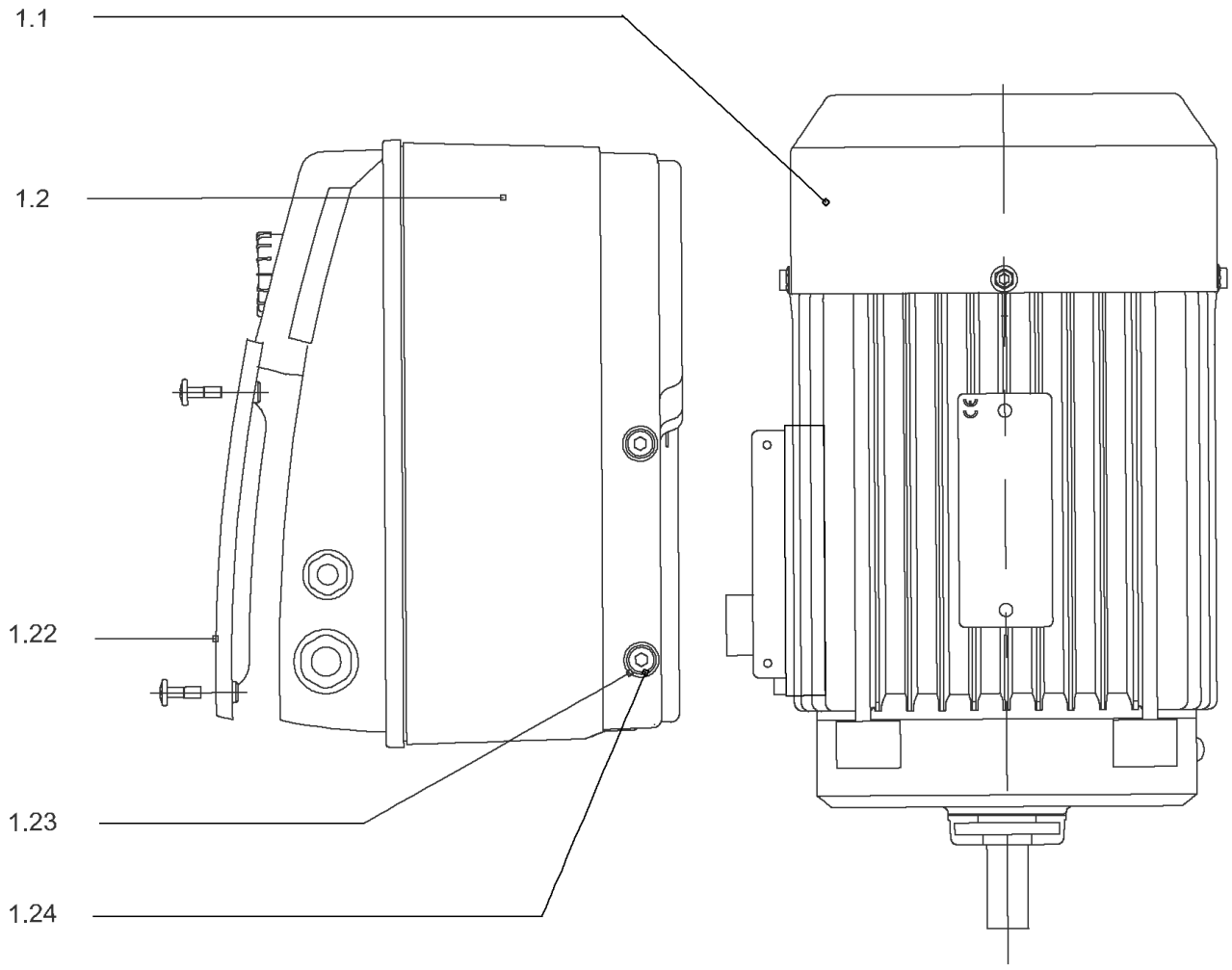
1.1
1.2
1.22
1.23
1.24

## DRIVE HELIX-VE1602-IE4-WE KIT

| Item | Article no. | Description | Quantity |
|---|---|---|---|
| 1.1 | 4207920 | MOTOR 2.2/2/90 3~ 380V 60HZ IE4 WE VP. | 1 |
| | | SPARE PARTS MOTOR:ON REQUEST | 1 |
| 1.2 | 4209593 | MODULE HELIX-VE1602-IE4-WE KIT | 1 |
| 1.22 | 2054227 | > MODULE COVER/GASKET TL3/4 KIT | 1 |
| 1.23 | 4215716 | > SCREW M5X16 DIN912 8.8 A2A (4pieces) VP. | 1 |
| 1.24 | 2057978 | > RONDELLE A5,3 DIN6797 FST ZN (4 PIECES) | 1 |

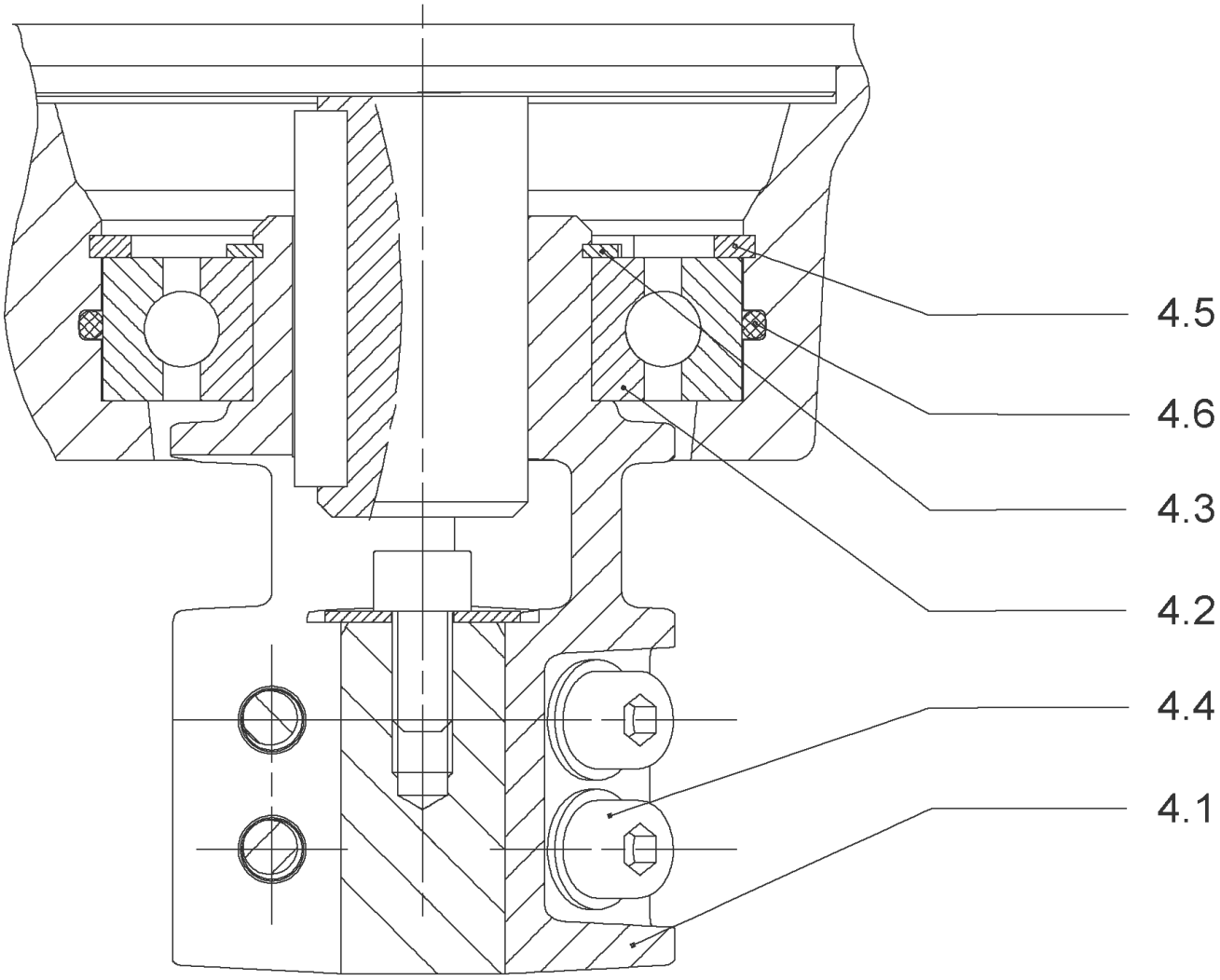
4.5
4.6
4.3
4.2
4.4
4.1

## COUPLING D.16xD.24 FT115 HELIX KIT (4159709)

| Item | Article no. | Description | Quantity |
|---|---|---|---|
| 4.1 | | COUPLING M+ Ø16XØ24 FT115 MACHINED | 1 |
| 4.2 | 2131023 | BALL BEARING 6207/ZZ-C3(HT)VP. | 1 |
| 4.3 | 4234254 | CIRCLIP-FOR-SHAFT-D35x1.5 VP. | 1 |
| 4.4 | 4157726 | SCREW KIT M8X30 (4 PIECES) | 1 |
| 4.5 | 4234251 | CIRCLIP-D72x2.5 VP. | 1 |
| 4.6 | 4234246 | O-RING 72X3 VP. | 1 |
| | | NOMEL CONTACT WASHER 8x16x1,4 STEEL ZC | 1 |

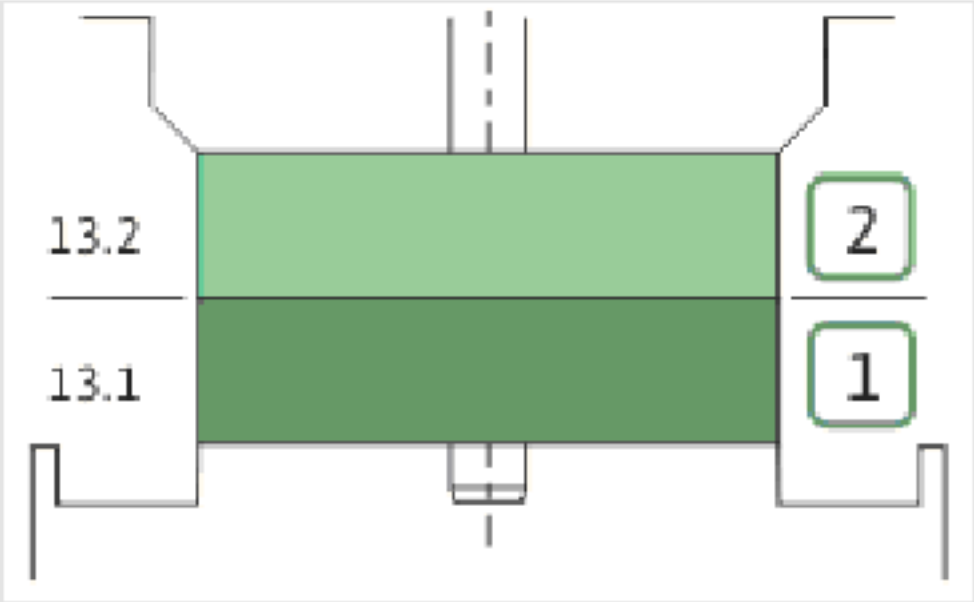
13.2
13.1
2
1

| Item | Article no. | Description | Quantity |
|---|---|---|---|
| 13.1 | 4159720 | STAGE HELIX 16 1.4301 KIT | 1 |
| | | > MACH.STG-CASING-WOGV-WNR-M+16-304 | 1 |
| | | > IMPELLER-M+16-304 | 1 |
| 13.2 | 4159714 | STAGE BEARING HELIX 16 1.4301 KIT | 1 |
| | | > MACH.BEARING-STG-CASING-WNR-M+16-304 | 1 |
| | | > IMPELLER-M+16-304 | 1 |
| | | > SLEEVE-SPACER-Ø19,35x30,665-304 | 1 |
| | | > SHAFT-SLEEVE-D16xD20x18-CW | 1 |

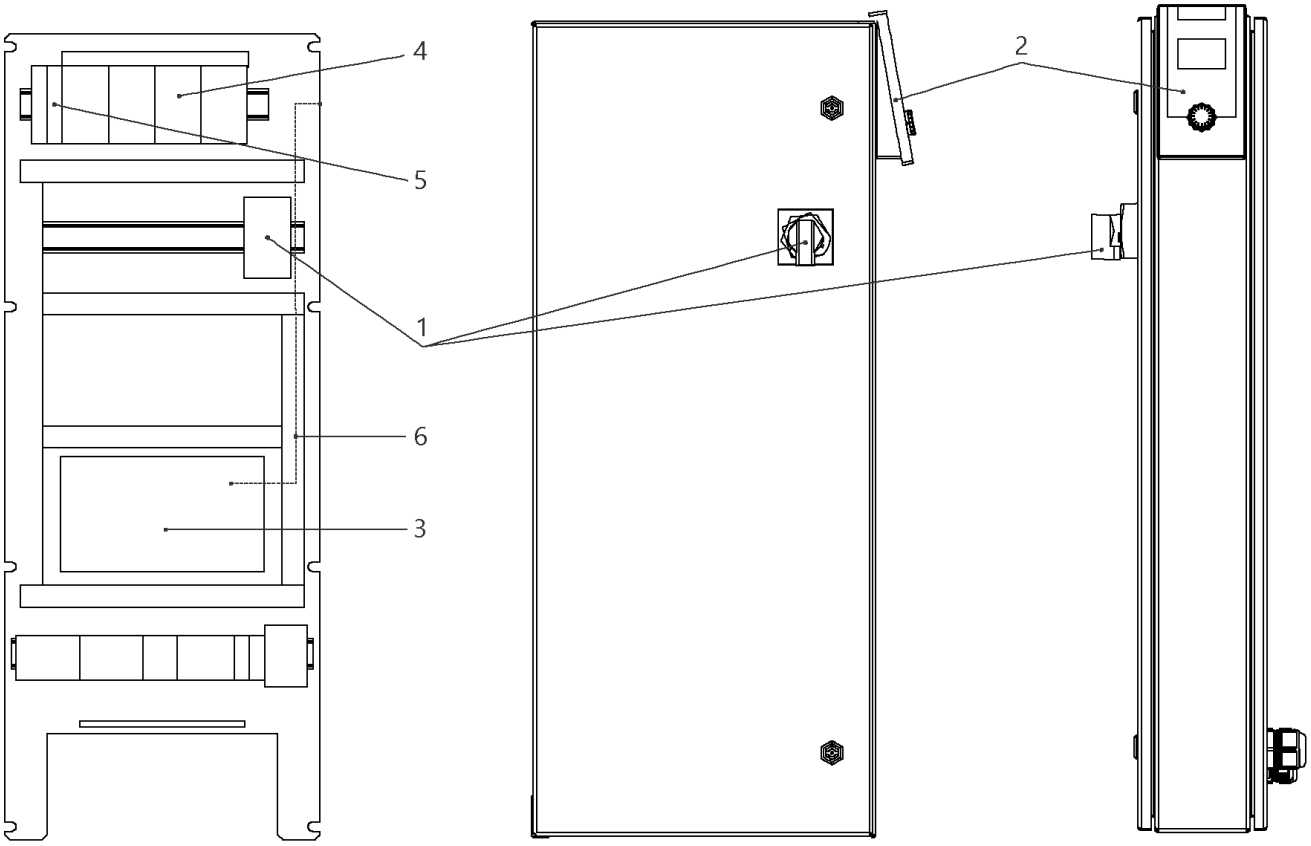
4
5
1
6
3
2

## W-CTRL-SCE-B-4x2,2KW-T4-FM-ND2

| Item | Article no. | Description | Quantity |
|---|---|---|---|
| 1 | 2104473 | MAIN SWITCH OT63F3 L105 KIT | 1 |
| 2 | 4184784 | CONTROL PANEL HMI SC KIT | 1 |
| 2 | 4185259 | ASSEMBLY DISPLAY SC PKG VP. | 1 |
| 3 | 4185257 | ASSEMBLY CPU SCe Booster VP. | 1 |
| 4 | 2051217 | AUTOM.CIRCUIT BREAKER S203 B16 TO7,5kW | 1 |
| 5 | 2046288 | CIRCUIT BREAKER S201 B16 | 1 |
| 6 | 4194956 | PATCH CABLE RJ45 CAT6 1,0M BLUE SC-PANEL | 1 |

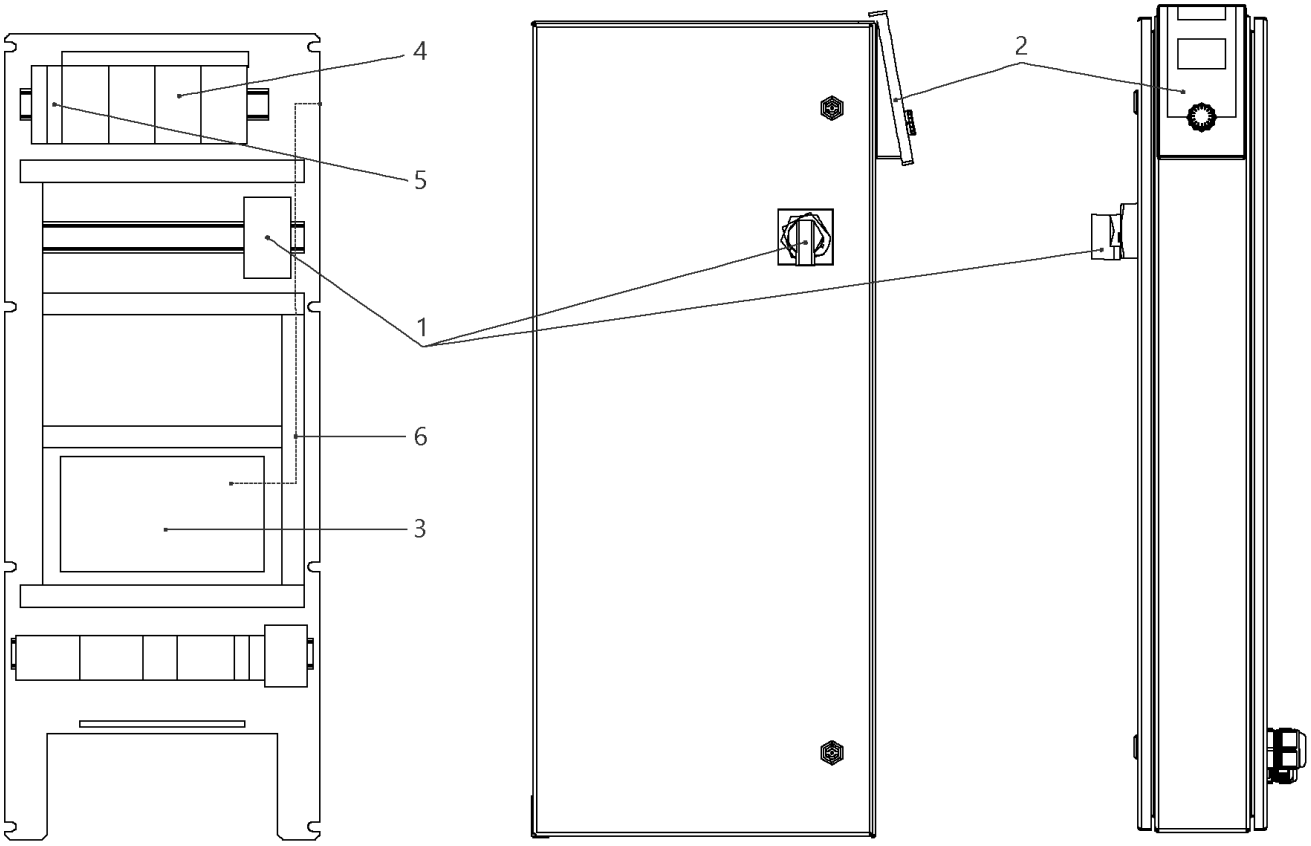
4
5
1
6
3
2

## W-CTRL-SCE-B-4x10A-T34-FM-ND2-AVC-PKG (2541903)

| Item | Article no. | Description | Quantity |
|---|---|---|---|
| 1 | 2104473 | MAIN SWITCH OT63F3 L105 KIT | 1 |
| 2 | 4184784 | CONTROL PANEL HMI SC KIT | 1 |
| 2 | 4185259 | ASSEMBLY DISPLAY SC PKG VP. | 1 |
| Note: DISPLAY ALONE / PLATINE SEULE | | | |
| 3 | 4185257 | ASSEMBLY CPU SCe Booster VP. | 1 |
| 5 | 2046288 | CIRCUIT BREAKER S201 B16 | 1 |
| 4 | 2119861 | AUTOMATIC CIRCUIT BREAKER S203 B13 3POL. | 1 |
| 6 | 4194956 | PATCH CABLE RJ45 CAT6 1,0M BLUE SC-PANEL | 1 |

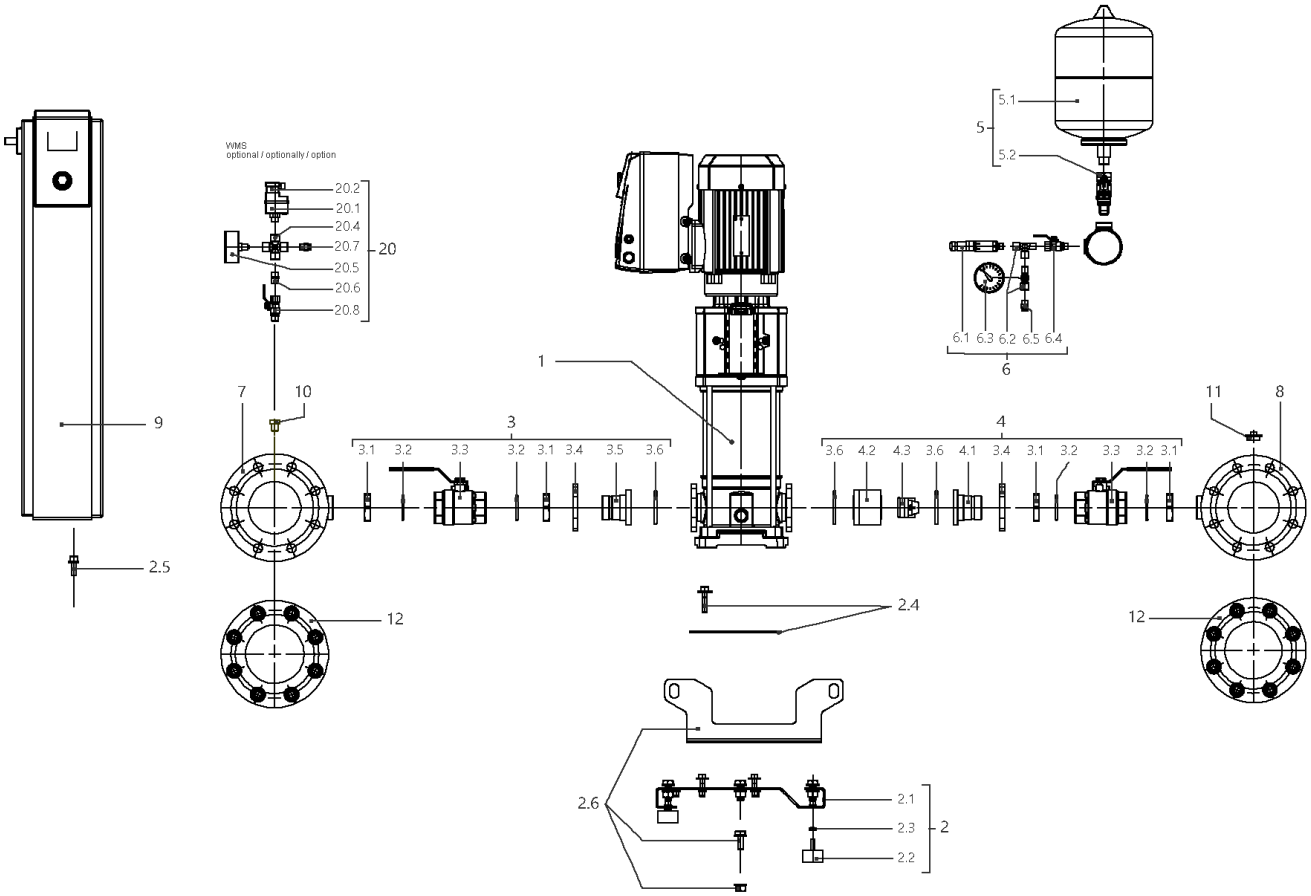
VIMS
optional / optionally / option
20.2
20.1
20.4
20.7
20.5
20.6
20.8
20
5.1
5
5.2
6.1 6.3 6.2 6.5 6.4
6
1
7
10
3
3.1 3.2 3.3 3.2 3.1 3.4 3.5 3.6
4
3.6 4.2 4.3 3.6 4.1 3.4 3.1 3.2 3.3 3.2 3.1
11
8
9
2.5
12
2.4
12
2.6
2.1
2.3
2.2
2

## SiBoost Smart 4HELIX VE1603/3kW (2537353)

| Item | Article no. | Description | Quantity |
|---|---|---|---|
| 1 | | HELIX VE1603-3.0-1/16/E/S | 1 |
| Note: TO / BIS / JUSQU'AU 30/04/2016 | | | |
| 1 | 4201559 | HELIX VE1603-3.0-1/16/E/S | 1 |
| Note: FROM / AB / À PARTIR DU 01/05/2016 | | | |
| 2 | 4197134 | BASE PLATE DE4 1450x420 KIT | 1 |
| 2.1 | | > BASEPLATE_4x4/6/10/16V_E300_BOX_150 | 1 |
| 2.2 | 2028654 | > VIBRATION DAMPER D.50X30 M10X28 | 1 |
| 2.3 | 2028281 | > NUT M10 DIN936 (ISO4035) 17H VZ | 1 |
| 2.4 | 4197083 | > HOLDER PUMP Helix 10/16 KIT | 1 |
| 2.5 | 4197084 | > HOLDER SWITCHBOX WILO Smart Control KIT | 1 |
| 2.6 | 4197117 | > LIFTING Siboost HELIX SC KIT | 1 |
| 3 | 4197072 | SUCTION SIDE Siboost Helix10/16 KIT | 1 |
| 3.1 | 2032623 | > NUT G1 1/2"SW55 MS | 1 |
| 3.2 | 2032616 | > O-RING ID.44X3,53N DIN3771 E7502 | 1 |
| 3.2 | 2534877 | > BALL TAP KDW40-H G11/2I-I-DN40 DVGW | 1 |
| 3.4 | 2032626 | > OVAL FLANGE D52-LK100 ST-VZ | 1 |
| 3.5 | 2032627 | > UNION INSERT DN40 LAPPED FLANGE | 1 |
| 3.6 | 2032628 | > O-RING ID.56,52X5,33N DIN3771 E7502 | 1 |
| 4 | 4197829 | DELIVERY SIDE Siboost Helix V16 KIT | 1 |
| 3.1 | 2032623 | > NUT G1 1/2"SW55 MS | 1 |
| 3.2 | 2032616 | > O-RING ID.44X3,53N DIN3771 E7502 | 1 |
| 3.3 | 2534877 | > BALL TAP KDW40-H G11/2I-I-DN40 DVGW | 1 |
| 3.4 | 2032626 | > OVAL FLANGE D52-LK100 ST-VZ | 1 |
| 4.1 | 2054274 | > UNION INSERT DN40 LAPPED FLANGE(W.COLLAR | 1 |
| 4.2 | 2054270 | > HOUSING RFV(RV-IN) DN50 MS VP. | 1 |
| 4.3 | 2028284 | > NON-RETURN DEVICE UNIT NV50/DN50 VP. | 1 |
| 3.6 | 2032628 | > O-RING ID.56,52X5,33N DIN3771 E7502 | 1 |
| 5 | 2032642 | DIAPHREM TANK 8L/PN16 DIN4807/T5 KIT | 1 |
| 5.1 | 2045914 | > DIAPHREM TANK 8L TYP-DD 16BAR | 1 |
| 5.2 | 2027853 | > FLOW FITTING G3/4 FOR DIAPHRAGM VES. | 1 |
| 6 | 4197076 | PRESSURE SENSOR/ GAUGE 0-16BAR KIT | 1 |
| 6.1 | 2085909 | > PRESS.SENSOR 1/4" 0-16BAR 4-20MA VP. | 1 |
| 6.2 | 4197077 | > T-PIECE 1/4" VP. | 1 |
| 6.3 | 2028692 | > PRESSURE GAUGE NG63-PN16-G1/4 | 1 |

| Item | Article no. | Description | Quantity |
|---|---|---|---|
| 6.4 | 2028291 | > BALL TAP R1/4" PN42 GIACOMINI R254DL | 1 |
| 6.5 | 2028691 | > BLOWGUN 1/4" MS 30BAR VP. | 1 |
| 7 | 4197836 | PIPE DE4 DN100-4x11/2"+2x1/4x1200 VP. | 1 |
| 8 | 4197837 | PIPE DE4 DN100-4x11/2"+2x1/4+1x3/4x1200 | 1 |
| 9 | | W-CTRL-SCE-B-4x4,0KW-T4-FM-ND2 | 1 |
| Note: TO / BIS / JUSQU'AU 18/05/2014 | | | |
| 9 | 2541907 | W-CTRL-SCE-B-4x13A-T34-FM-ND2-AVC-PKG | 1 |
| Note: FROM / AB / À PARTIR DU 19/05/2014 | | | |
| 10 | 4197079 | PLUG G1/4"x10 AISI304 KIT | 1 |
| 11 | 2032654 | PLUG R3/4" MS VIEGA 1751 | 1 |
| 12 | 4197835 | BLIND-FLANGE DN100 PN16 -1.4404 KIT | 1 |
| | 2106342 | > FLAT GASKET D.120/162X2 DN100 C4430 VP. | 1 |
| | | > NUT M16 DIN934 A2 1.4301 | 1 |
| | | > SCREW M16x70 DIN933 A2 (8 PIECES) | 1 |
| | | > WASHER A17 DIN125 A2 | 1 |
| | | > FULL FLANGE ST.DN100 PN16 EN1092-1/05 A | 1 |
| | | > FLANGE COVER DN100 DIN 3443 FORM A | 1 |
| 20 | | ASSEMBLY WMS. DE-EB. +VP | 1 |
| 20.1 | 2028652 | > PRESSURE SWITCH PS3-ASR 1/(1,3) VP. | 1 |
| 20.2 | 2130983 | > PLUG PS3-415 WITH KABEL 1,5M 2NO VP. | 1 |
| 20.4 | 2028290 | > CROSSPIECE R1/4" MS-NICKEL | 1 |
| 20.5 | 2028687 | > PRESSURE GAUGE NG63 R1/4" HI.0-6BAR | 1 |
| 20.6 | 2054268 | > DUAL NIPPLE G1/4" x G1/4" MS VP. | 1 |
| 20.7 | 2028691 | > BLOWGUN 1/4" MS 30BAR VP. | 1 |
| 20.8 | 2028291 | > BALL TAP R1/4" PN42 GIACOMINI R254DL | 1 |

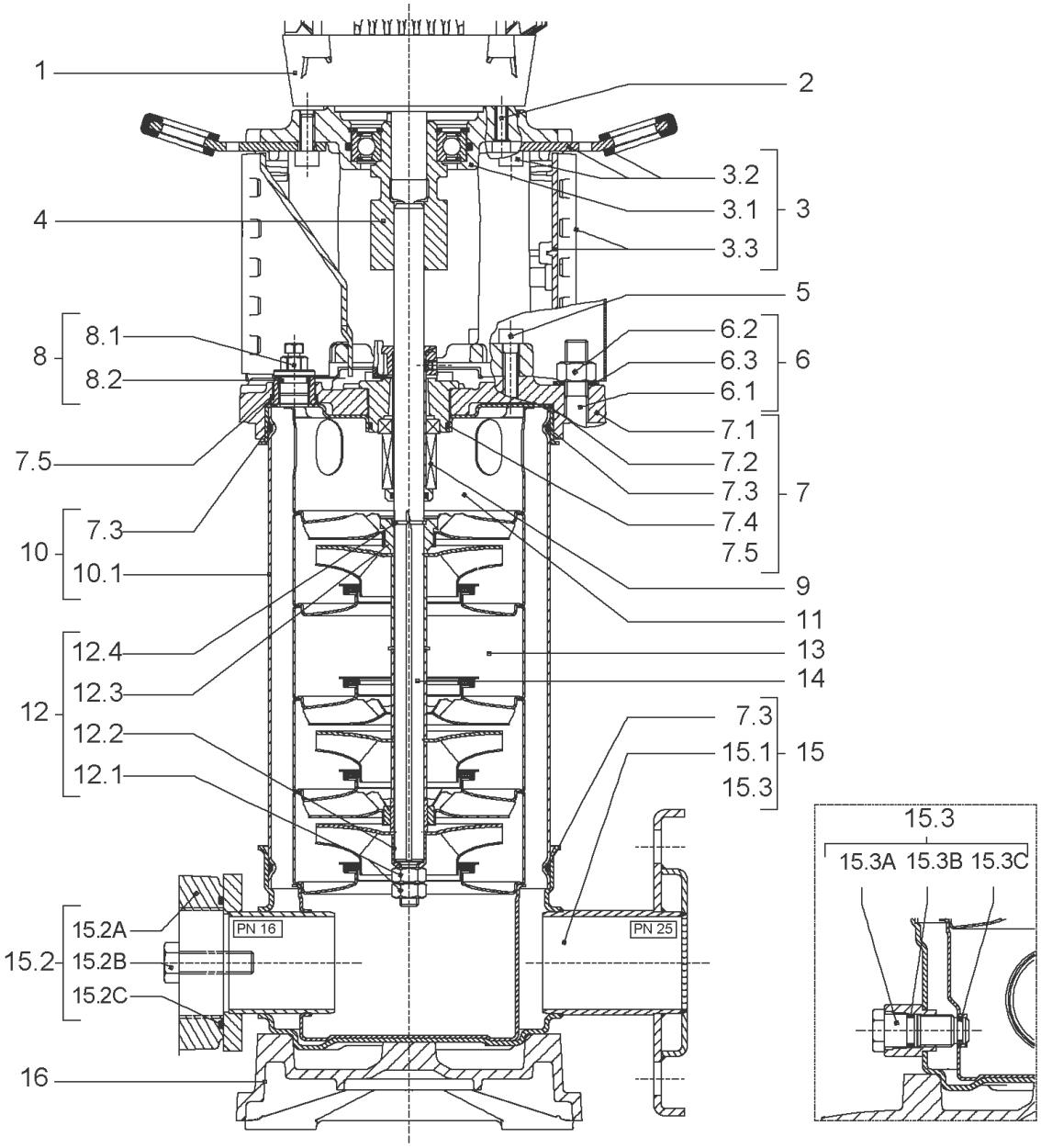
1
2
3.2
3.1
3
3.3
4
5
8.1
8
8.2
6.2
6.3
6
6.1
7.1
7.5
7.2
7.3
7
7.4
7.5
7.3
10
10.1
9
11
12.4
13
12.3
14
12
12.2
12.1
7.3
15.1
15
15.3
15.3
15.3A 15.3B 15.3C
15.2A
PN 16
PN 25
15.2
15.2B
15.2C
16

| Item | Article no. | Description | Quantity |
|---|---|---|---|
| 1 | | DRIVE HELIXVE1603-3.0-IE2-WE KIT | 1 |
| Note: MOTOR BRAND WILO ELEC | | | |
| 1 | | DRIVE HELIX-VE1603-3T-IE4-WE-KIT | 1 |
| Note: MOTOR BRAND WILO ELEC | | | |
| 2 | 4159703 | SCREW M8X40 (4 PIECES) | 1 |
| 3 | 4172789 | LANTERN FT130 HELIX V10 KIT | 1 |
| 3.1 | | > M+5_6_LANTERN_ONE-PIECE_FT130_CATA | 1 |
| 3.2 | 2127604 | > EYELET CPL.FT HELIX(2 PIECES) | 1 |
| 3.3 | 4159692 | > COUPLING PROTECTOR FT HELIX KIT | 1 |
| 4 | 4159710 | COUPLING D.16XD.28 FT130 HELIX KIT | 1 |
| 5 | 4159707 | SCREW M8X30 (4 PIECES) | 1 |
| 6 | 4177817 | STUD BOLT M12X341 KIT | 1 |
| 6.1 | | > TIE BOLT M12-341x18x30-1.4057 | 1 |
| 6.2 | 2094647 | > NUT M12 M12 ISO4032 VP. | 1 |
| 6.3 | 2123557 | > WASHER CS-12.4-24-1.6-NFE25 (4 PIECES) | 1 |
| 7 | 4210143 | STATIONARY RING HOLDER HELIX 6" EPDM | 1 |
| 7.2 | 2127607 | > STATIONARY RING HOLDER 6" HELIX 1.4301 V | 1 |
| 7.3 | 4176513 | > O-RING FOR PUMP JACKET VP. | 1 |
| 7.4 | 2127603 | > O-RING ID.37,6x2,4 EPDM VP. | 1 |
| 7.5 | 2127602 | > O-RING ID.21,35x2 EPDM VP. | 1 |
| 8 | 4159686 | FILING/PURGING PLUG HELIX EPDM KIT | 1 |
| 9 | 4171327 | SEAL-KIT-HELIX6-10-16 O/E KIT | 1 |
| 10 | 2127575 | HOUSING PIPE D.152x210 1.4301 KIT | 1 |
| 11 | 2127588 | CENTERING STAGE-RETURN HELIX16 1.4301 VP | 1 |
| 12 | 4209329 | SHAFT EQUIPMENT HELIX V16 KIT | 1 |
| 12.1 | | > NUT-H-M10-A4.70 | 1 |
| 12.2 | | > SERRATED LOCK WASHER M+16M3-316L | 1 |
| 12.3 | | > IMPELLER STOP RING L35,9-304 | 1 |
| 12.4 | | > STOP-RUSH-1/2-D16xd2-M+316 | 1 |
| 13 | | HYDRAULIC HELIX V 1603 1.4307 | 1 |
| 14 | 2127564 | SHAFT D.16X330 1.4301 VP. | 1 |
| 15 | 4217899 | PUMP HOUSING HELIX DN50 PN16 1.4301 KIT | 1 |
| 7.3 | 4176513 | > O-RING FOR PUMP JACKET VP. | 1 |
| 15.1 | | > BLASTING PPE HOUSING V-PN16-DN50-304 | 1 |

| Item | Article no. | Description | Quantity |
|---|---|---|---|
| 15.2 | 4217895 | > COUNTER FLANGE-G2"-PN16-GJL KIT | 1 |
| 15.3 | 4171321 | > PRIMING/DRAIN PLUG EPDM HELIX KIT | 1 |
| 16 | 2127601 | BASEPLATE HELIX V16 VP. | 1 |

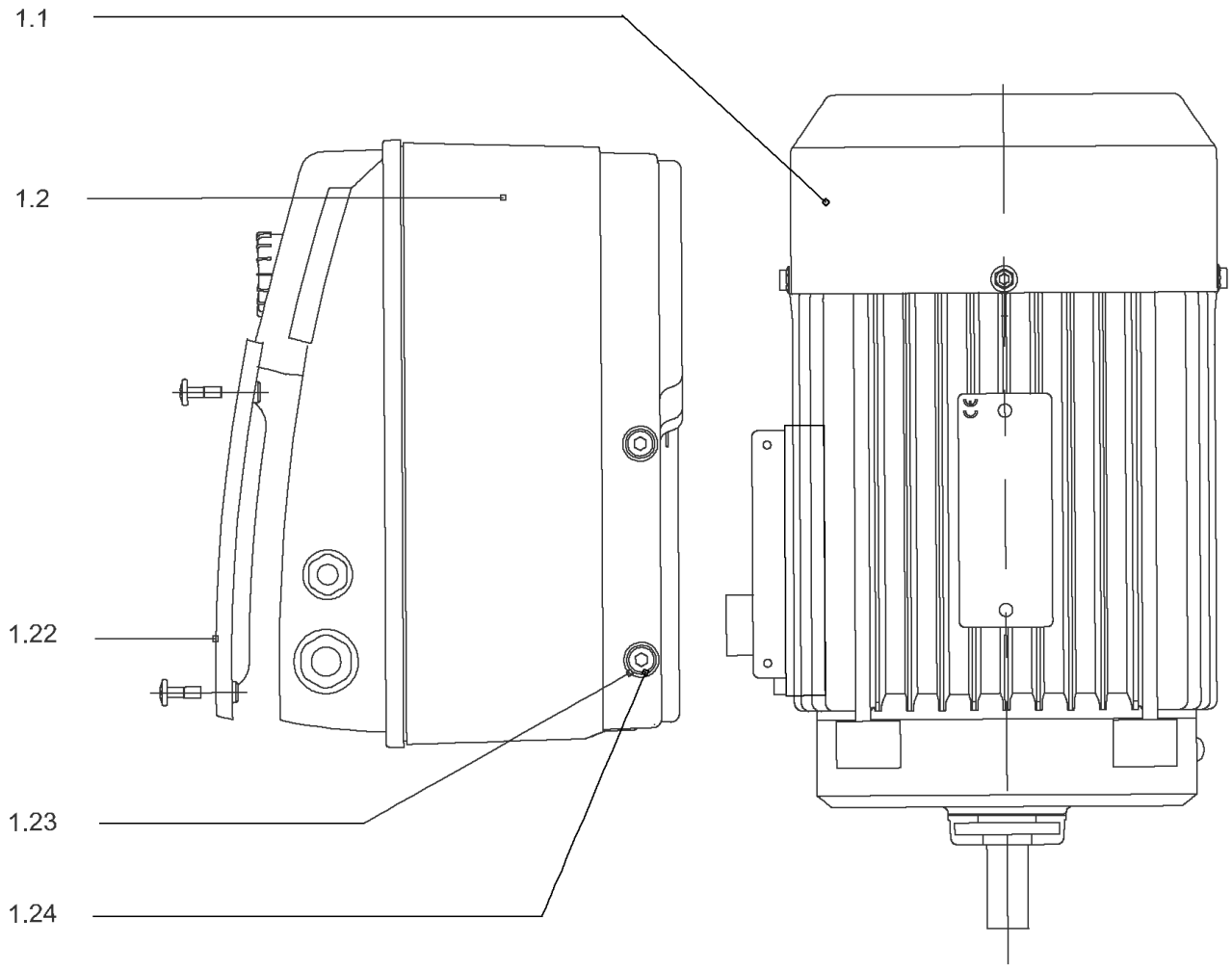
1.1
1.2
1.22
1.23
1.24

## DRIVE HELIXVE1603-3.0-IE2-WE KIT

| Item | Article no. | Description | Quantity |
|---|---|---|---|
| 1.1 | | M3-T638P55V18H-100F13-SU-N28-WE-IE2 VP. | 1 |
| Note: no longer available /nicht mehrlieferbarn'est plus disponible | | | |
| | | SPARE PARTS MOTOR:ON REQUEST | 1 |
| 1.2 | 4186405 | MODULE HELIX-VE1603-3.0-IE2-WE KIT | 1 |
| 1.22 | 2054227 | > MODULE COVER/GASKET TL3/4 KIT | 1 |
| 1.23 | 4215716 | > SCREW M5X16 DIN912 8.8 A2A (4pieces) VP. | 1 |
| 1.24 | 2057978 | > RONDELLE A5,3 DIN6797 FST ZN (4 PIECES) | 1 |

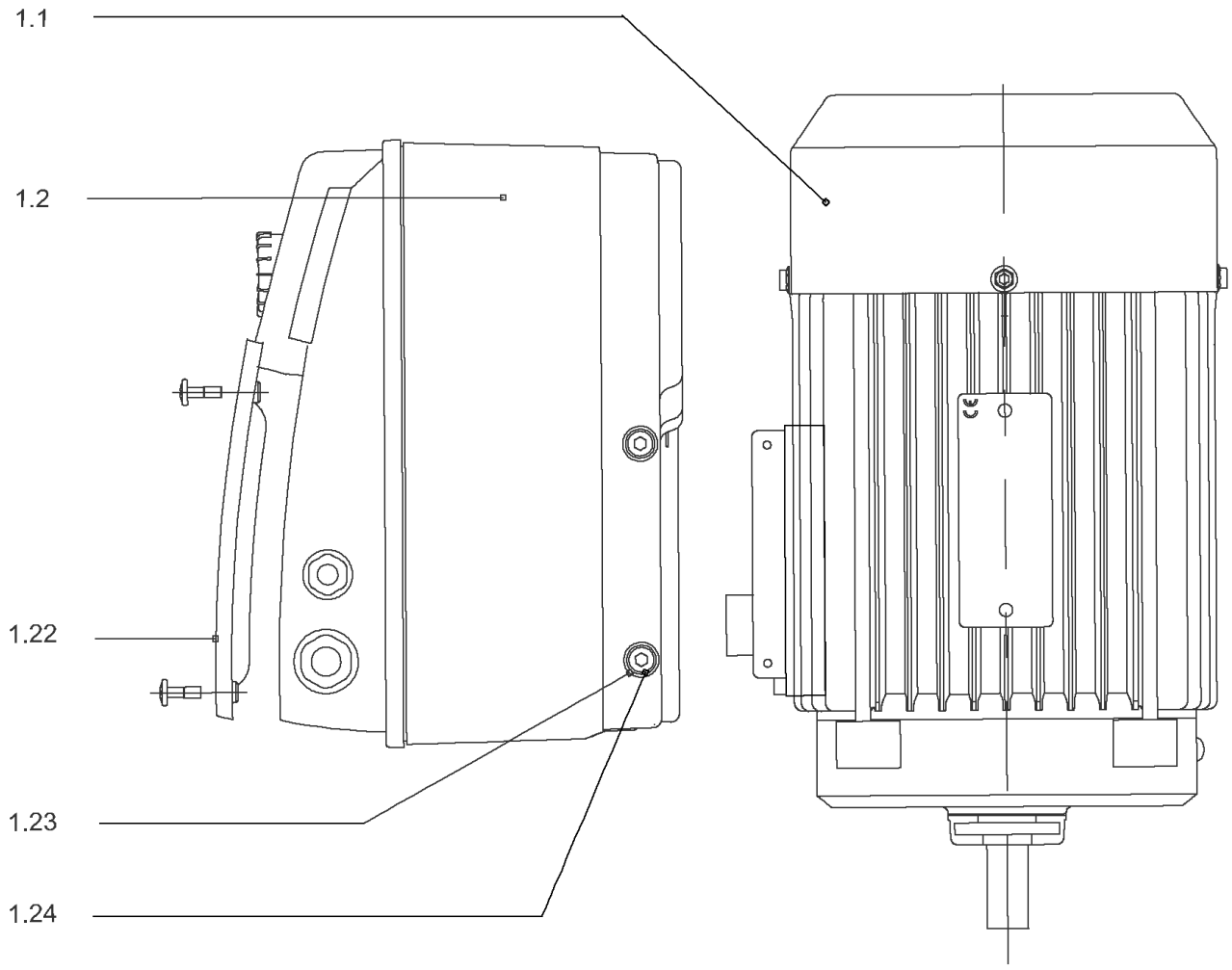
1.1
1.2
1.22
1.23
1.24

## DRIVE HELIX-VE1603-3T-IE4-WE-KIT

| Item | Article no. | Description | Quantity |
|---|---|---|---|
| 1.1 | 4207922 | MOTOR 3/2/100 3~ 380V 60HZ IE4 WE VP. | 1 |
| | | SPARE PARTS MOTOR:ON REQUEST | 1 |
| 1.2 | 4209340 | MODULE HELIX-VE1603-3.0-IE4-WE KIT | 1 |
| 1.22 | 2054227 | > MODULE COVER/GASKET TL3/4 KIT | 1 |
| 1.23 | 4215716 | > SCREW M5X16 DIN912 8.8 A2A (4pieces) VP. | 1 |
| 1.24 | 2057978 | > RONDELLE A5,3 DIN6797 FST ZN (4 PIECES) | 1 |

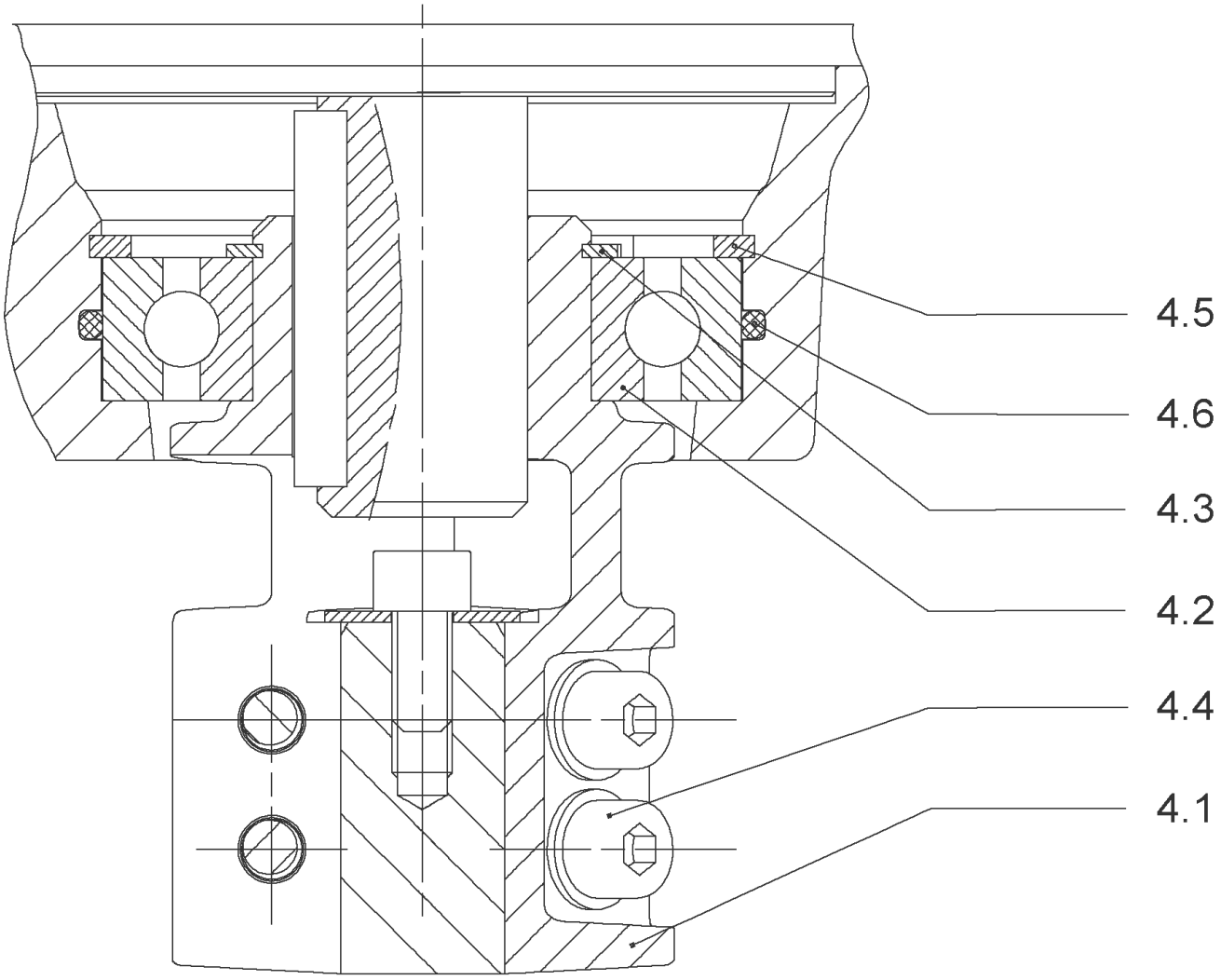
4.5
4.6
4.3
4.2
4.4
4.1

## COUPLING D.16XD.28 FT130 HELIX KIT (4159710)

| Item | Article no. | Description | Quantity |
|---|---|---|---|
| 4.1 | | COUPLING M+ Ø16XØ28 FT130 MACHINED | 1 |
| 4.2 | 2131022 | BALL BEARING 6209/ZZ-C3(HT)VP. | 1 |
| 4.3 | 4233930 | CIRCLIP-FOR-BORES-D45x1,75 VP. | 1 |
| 4.4 | 4157726 | SCREW KIT M8X30 (4 PIECES) | 1 |
| 4.5 | 4234252 | CIRCLIPS 85X3 VP. | 1 |
| 4.6 | 4234243 | O-RING 85X3 VP. | 1 |
| | | NOMEL CONTACT WASHER 8x16x1,4 STEEL ZC | 1 |

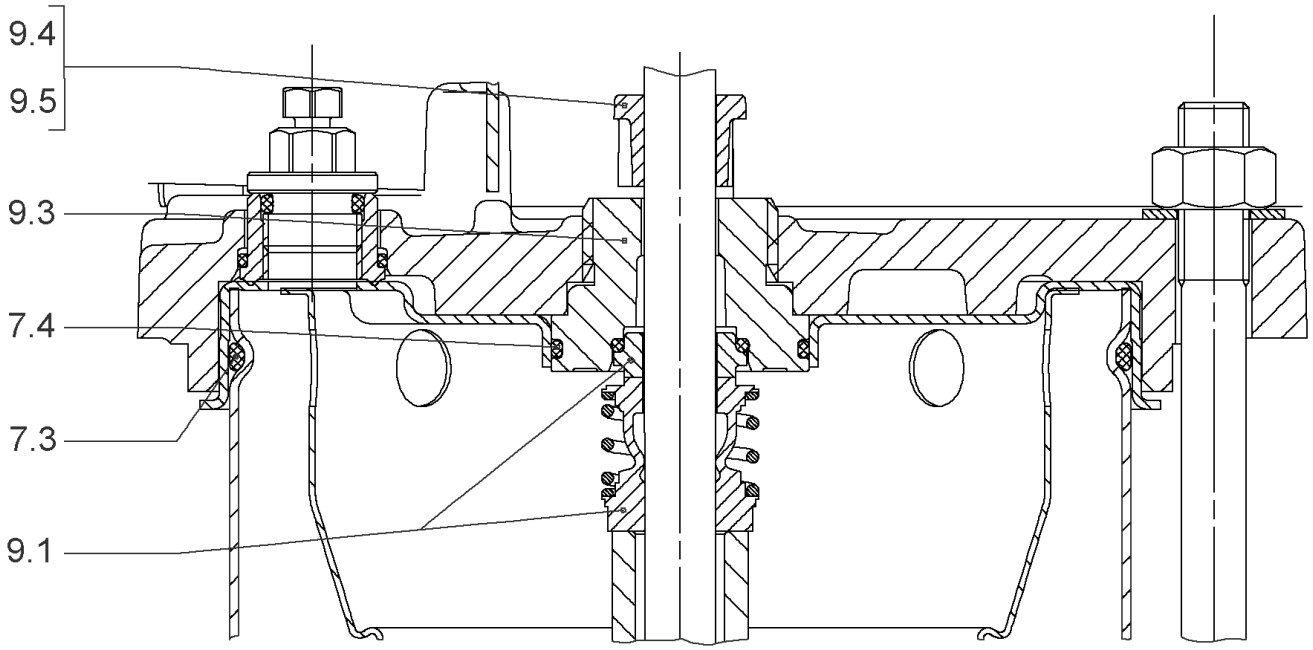
9.4
9.5
9.3
7.4
7.3
9.1

## SEAL-KIT-HELIX6-10-16 O/E KIT (4171327)

| Item | Article no. | Description | Quantity |
|---|---|---|---|
| 7.3 | 4176513 | O-RING FOR PUMP JACKET VP. | 1 |
| 7.4 | 2127603 | O-RING ID.37,6x2,4 EPDM VP. | 1 |
| 9.1 | 4177801 | MECH.SEAL HELIX6-10-16 O/E VP. | 1 |
| 9.3 | 4177798 | MACHINED RING HOLDER M+6" Ø16 304 VP. | 1 |
| 9.5 | 4177799 | MACHINED DRIVE RING Ø16 VP. | 1 |
| 9.4 | 4176520 | SCREW CH M5x5 A4-70 ( 3PIECES ) | 1 |

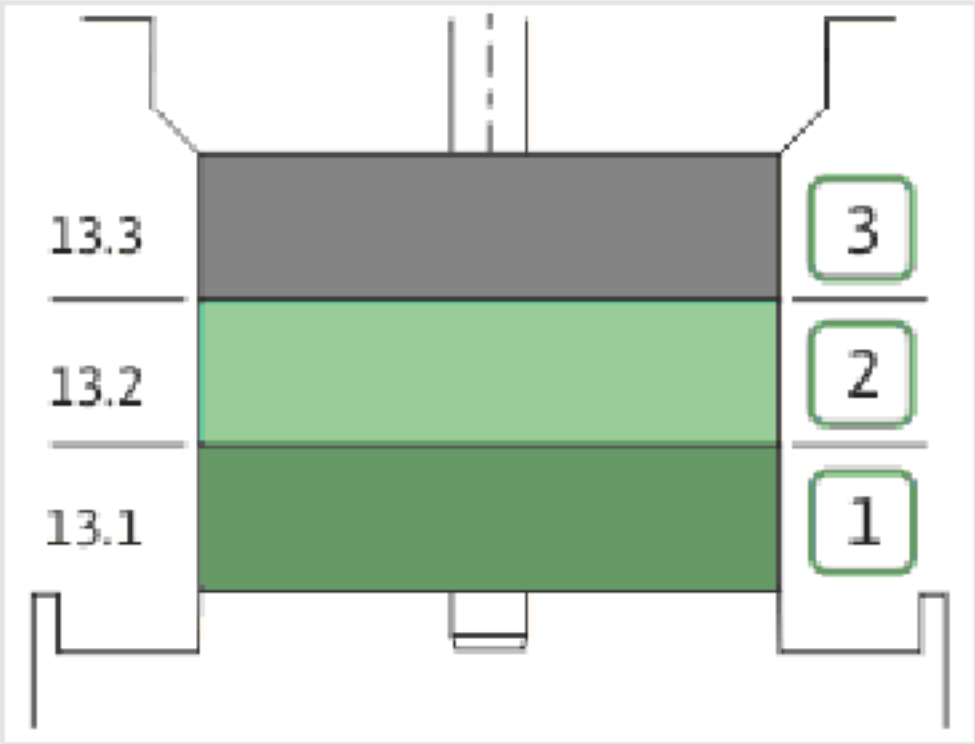
13.3
13.2
13.1
3
2
1

| Item | Article no. | Description | Quantity |
|---|---|---|---|
| 13.1 | 4159720 | STAGE HELIX 16 1.4301 KIT | 1 |
| | | > MACH.STG-CASING-WOGV-WNR-M+16-304 | 1 |
| | | > IMPELLER-M+16-304 | 1 |
| 13.2 | 4159714 | STAGE BEARING HELIX 16 1.4301 KIT | 1 |
| | | > MACH.BEARING-STG-CASING-WNR-M+16-304 | 1 |
| | | > IMPELLER-M+16-304 | 1 |
| | | > SLEEVE-SPACER-Ø19,35x30,665-304 | 1 |
| | | > SHAFT-SLEEVE-D16xD20x18-CW | 1 |
| 13.3 | 4159715 | INTERMEDIATE STAGE HELIX 16 1.4301 KIT | 1 |
| | | > CORPS-ETG-STD-ACR-AJR-USIN.M+16-304 | 1 |
| | | > IMPELLER-M+16-304 | 1 |
| | | > SPACER Ø16X19.4-L48.6-304 | 1 |

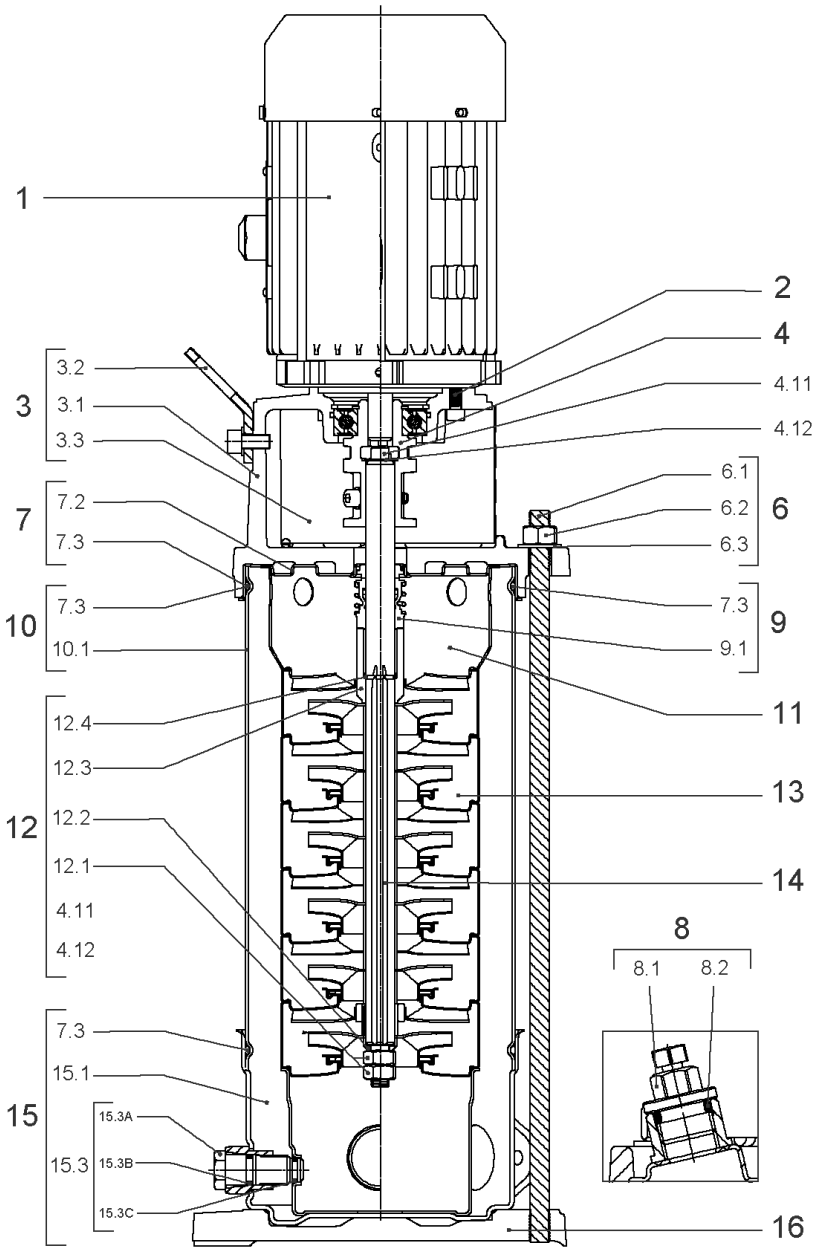
1
2
4
4.11
4.12
3
3.2
3.1
3.3
7
7.2
7.3
10
7.3
10.1
6
6.1
6.2
6.3
9
7.3
9.1
11
12
12.4
12.3
12.2
12.1
4.11
4.12
13
14
8
8.1
8.2
15
7.3
15.1
15.3
15.3A
15.3B
15.3C
16

## HELIX VE1603-3.0-1/16/E/S (4201559)

| Item | Article no. | Description | Quantity |
|---|---|---|---|
| 1 | | DRIVE HELIX-VE1603-3T-IE4-WE-KIT | 1 |
| Note: MOTOR BRAND WILO ELEC | | | |
| | | SPARE PARTS MOTOR:ON REQUEST | 1 |
| 2 | 4159707 | SCREW M8X30 (4 PIECES) | 1 |
| 3 | 4214473 | LANTERN FT130 HELIX KIT | 1 |
| 3.1 | | > LANT-MOT-VMI-ReDTC6"-FT130-MACHINED+CATA | 1 |
| 3.2 | 4184852 | > EYELET CPL.FT HELIX (2 PIECES) | 1 |
| 3.3 | 4213782 | > COUPLING PROTECTOR FT115/130 HELIX KIT | 1 |
| 4 | 4159710 | COUPLING D.16XD.28 FT130 HELIX KIT | 1 |
| 6 | 2127553 | STUD BOLT M12X341 KIT | 1 |
| 7 | 4214481 | STATIONARY RING HOLDER HELIX D27 ReDTC | 1 |
| 7.2 | 4214479 | > STATIONARY RING HOLDER HELIX D27 VP. | 1 |
| 7.3 | 4176513 | > O-RING FOR PUMP JACKET VP. | 1 |
| 8 | 4212724 | FILING/PURGING PLUG HELIX ReDTC KIT | 1 |
| 8.1 | | > FILLING PLUG MVI6"-304 | 1 |
| 8.2 | 4177800 | > O-RING EPDM PLUG HELIX VP. | 1 |
| 9 | 4214483 | MECH.SEAL HELIX6-10-16 O/E ReDTC KIT | 1 |
| 9.1 | 4177801 | > MECH.SEAL HELIX6-10-16 O/E VP. | 1 |
| 7.3 | 4176513 | > O-RING FOR PUMP JACKET VP. | 1 |
| 10 | 2127575 | HOUSING PIPE D.152x210 1.4301 KIT | 1 |
| 11 | 2127588 | CENTERING STAGE-RETURN HELIX16 1.4301 VP | 1 |
| 12 | 4214520 | SHAFT EQUIPMENT HELIX V16 ReDTC KIT | 1 |
| 12.1 | | > NUT-H-M10-A4.70 | 1 |
| 12.2 | | > SERRATED LOCK WASHER M+16M3-316L | 1 |
| 12.3 | | > 1/2-SNAP-RING-16M3-316L | 1 |
| 12.4 | | > STOP-RUSH-1/2-D16xd2-M+316 | 1 |
| 4.11 | | > SCREW CHC-M6X14-8.8-ISO4762-GEOMET500A | 1 |
| 4.12 | | > WASHER D.24 L6U ZINK | 1 |
| 13 | | HYDRAULIC HELIX V 1603 1.4307 | 1 |
| 14 | 4214495 | SHAFT D.16X278 HELIX 1.4057 VP. | 1 |
| 15 | 4217899 | PUMP HOUSING HELIX DN50 PN16 1.4301 KIT | 1 |
| 7.3 | 4176513 | > O-RING FOR PUMP JACKET VP. | 1 |
| 15.1 | | > BLASTING PPE HOUSING V-PN16-DN50-304 | 1 |
| 15.2 | 4217895 | > COUNTER FLANGE-G2"-PN16-GJL KIT | 1 |

| Item | Article no. | Description | Quantity |
|---|---|---|---|
| 15.3 | 4171321 | > PRIMING/DRAIN PLUG EPDM HELIX KIT | 1 |
| 16 | 2127601 | BASEPLATE HELIX V16 VP. | 1 |

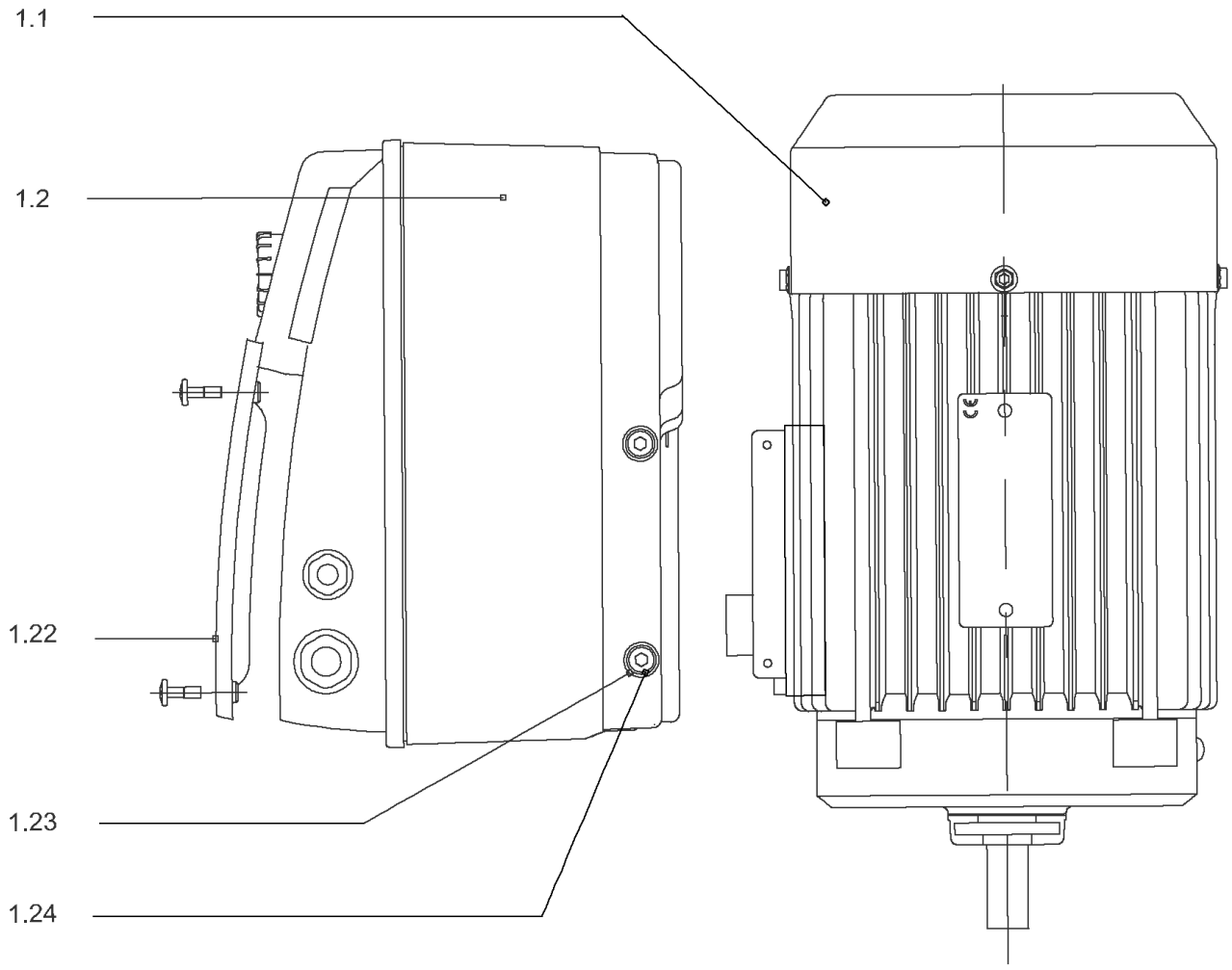
1.1
1.2
1.22
1.23
1.24

## DRIVE HELIX-VE1603-3T-IE4-WE-KIT

| Item | Article no. | Description | Quantity |
|---|---|---|---|
| 1.1 | 4207922 | MOTOR 3/2/100 3~ 380V 60HZ IE4 WE VP. | 1 |
| | | SPARE PARTS MOTOR:ON REQUEST | 1 |
| 1.2 | 4209340 | MODULE HELIX-VE1603-3.0-IE4-WE KIT | 1 |
| 1.22 | 2054227 | > MODULE COVER/GASKET TL3/4 KIT | 1 |
| 1.23 | 4215716 | > SCREW M5X16 DIN912 8.8 A2A (4pieces) VP. | 1 |
| 1.24 | 2057978 | > RONDELLE A5,3 DIN6797 FST ZN (4 PIECES) | 1 |

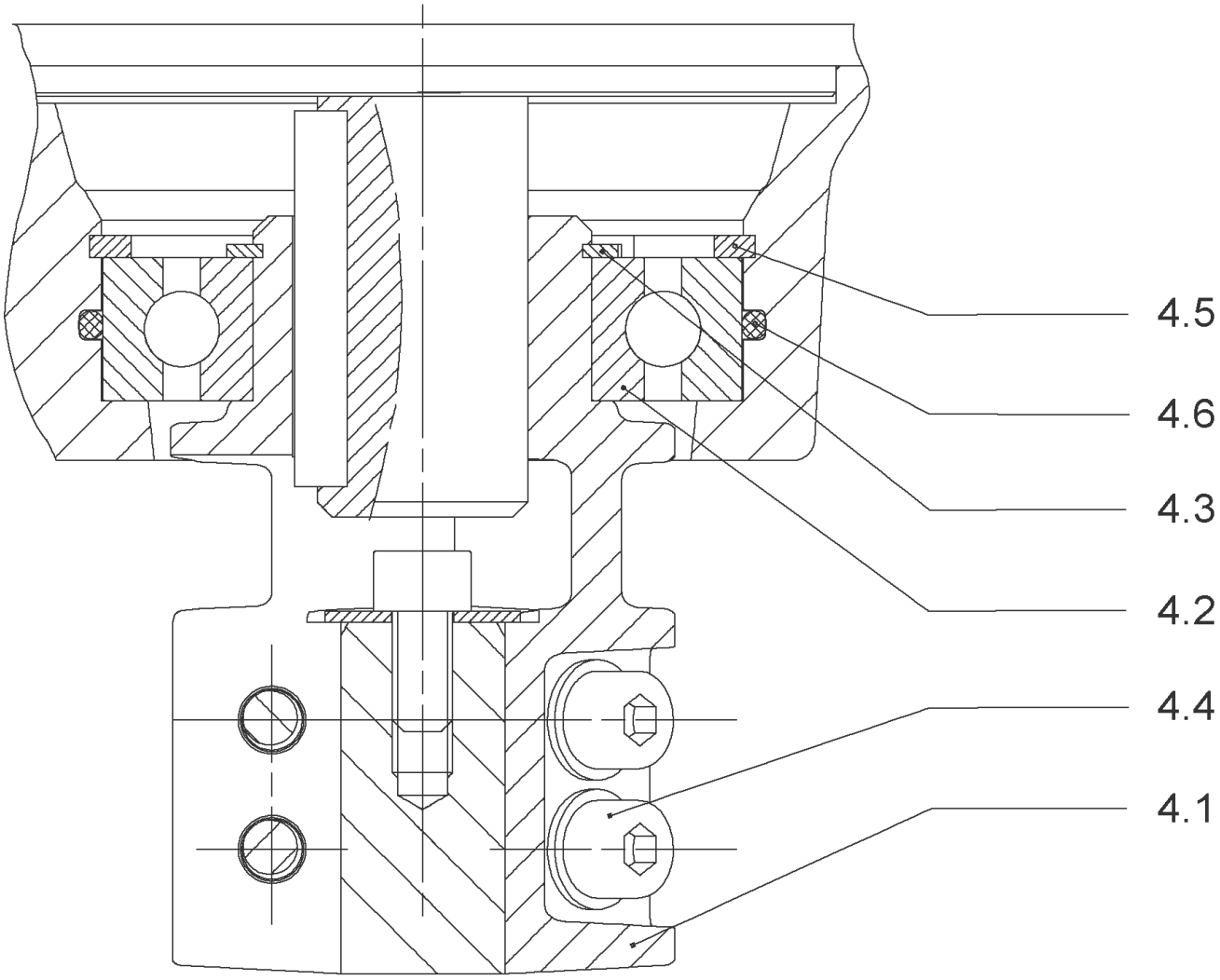
4.5
4.6
4.3
4.2
4.4
4.1

## COUPLING D.16XD.28 FT130 HELIX KIT (4159710)

| Item | Article no. | Description | Quantity |
|---|---|---|---|
| 4.1 | | COUPLING M+ Ø16XØ28 FT130 MACHINED | 1 |
| 4.2 | 2131022 | BALL BEARING 6209/ZZ-C3(HT)VP. | 1 |
| 4.3 | 4233930 | CIRCLIP-FOR-BORES-D45x1,75 VP. | 1 |
| 4.4 | 4157726 | SCREW KIT M8X30 (4 PIECES) | 1 |
| 4.5 | 4234252 | CIRCLIPS 85X3 VP. | 1 |
| 4.6 | 4234243 | O-RING 85X3 VP. | 1 |
| | | NOMEL CONTACT WASHER 8x16x1,4 STEEL ZC | 1 |

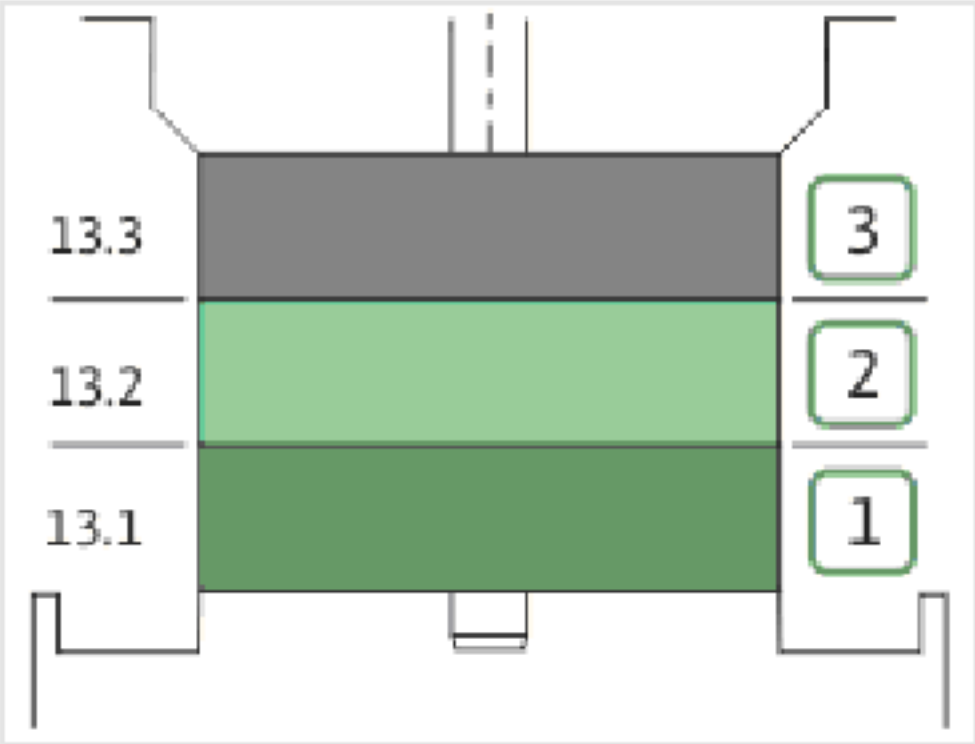
13.3
13.2
13.1
3
2
1

| Item | Article no. | Description | Quantity |
|---|---|---|---|
| 13.1 | 4159720 | STAGE HELIX 16 1.4301 KIT | 1 |
| | | > MACH.STG-CASING-WOGV-WNR-M+16-304 | 1 |
| | | > IMPELLER-M+16-304 | 1 |
| 13.2 | 4159714 | STAGE BEARING HELIX 16 1.4301 KIT | 1 |
| | | > MACH.BEARING-STG-CASING-WNR-M+16-304 | 1 |
| | | > IMPELLER-M+16-304 | 1 |
| | | > SLEEVE-SPACER-Ø19,35x30,665-304 | 1 |
| | | > SHAFT-SLEEVE-D16xD20x18-CW | 1 |
| 13.3 | 4159715 | INTERMEDIATE STAGE HELIX 16 1.4301 KIT | 1 |
| | | > CORPS-ETG-STD-ACR-AJR-USIN.M+16-304 | 1 |
| | | > IMPELLER-M+16-304 | 1 |
| | | > SPACER Ø16X19.4-L48.6-304 | 1 |

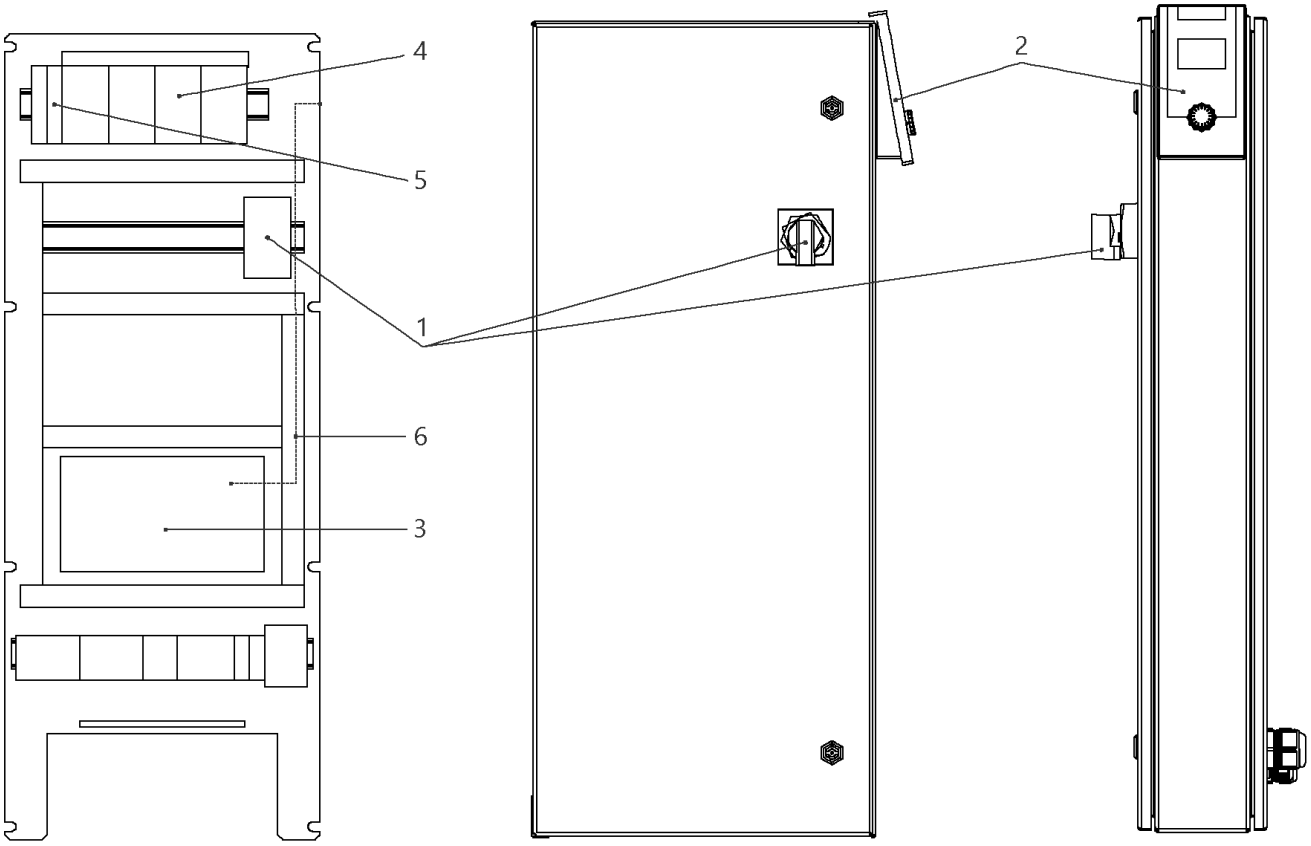
4
5
1
6
3
2

## W-CTRL-SCE-B-4x4,0KW-T4-FM-ND2

| Item | Article no. | Description | Quantity |
|---|---|---|---|
| 1 | 2104473 | MAIN SWITCH OT63F3 L105 KIT | 1 |
| 2 | 4184784 | CONTROL PANEL HMI SC KIT | 1 |
| 2 | 4185259 | ASSEMBLY DISPLAY SC PKG VP. | 1 |
| 3 | 4185257 | ASSEMBLY CPU SCe Booster VP. | 1 |
| 4 | 2051217 | AUTOM.CIRCUIT BREAKER S203 B16 TO7,5kW | 1 |
| 5 | 2046288 | CIRCUIT BREAKER S201 B16 | 1 |
| 6 | 4194956 | PATCH CABLE RJ45 CAT6 1,0M BLUE SC-PANEL | 1 |

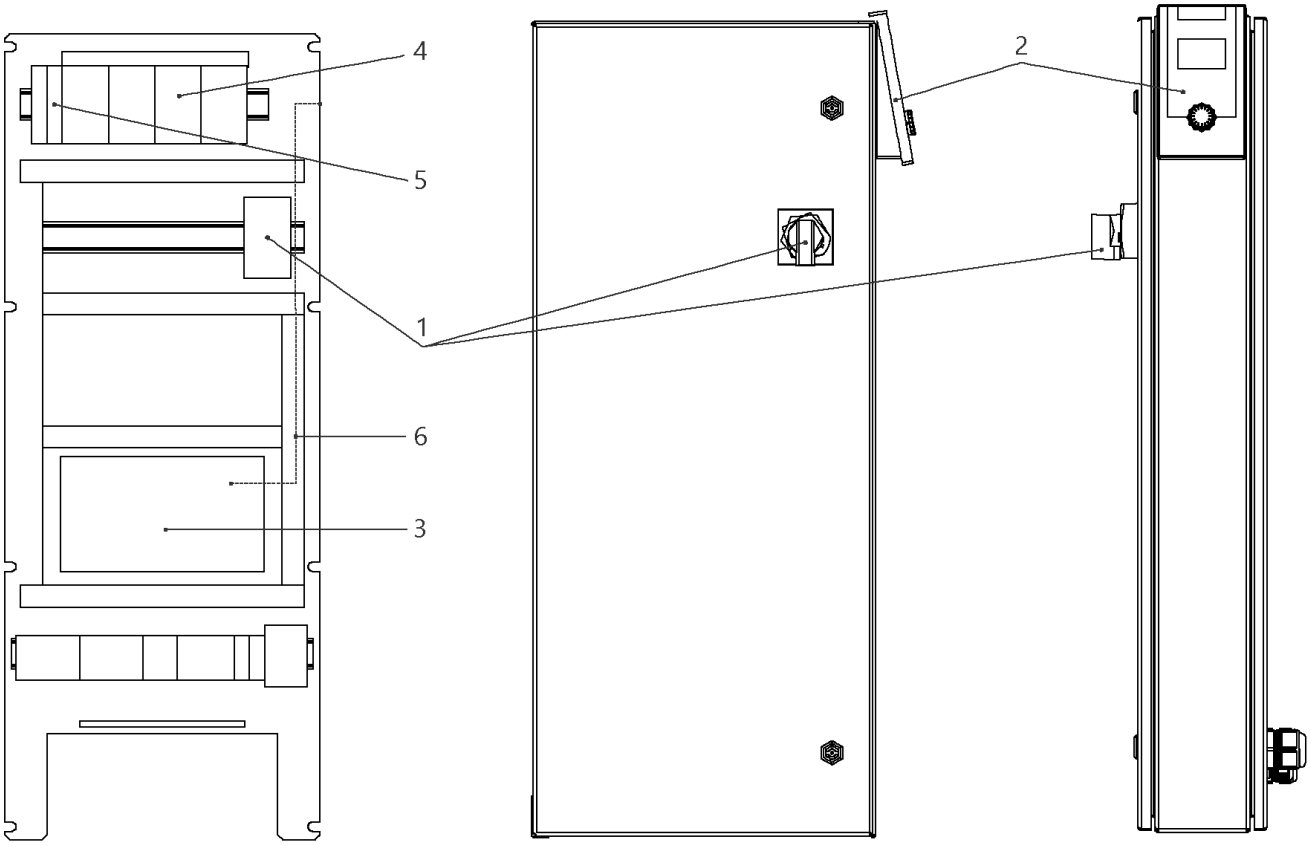
4
5
1
6
3
2

## W-CTRL-SCE-B-4x13A-T34-FM-ND2-AVC-PKG (2541907)

| Item | Article no. | Description | Quantity |
|---|---|---|---|
| 1 | 2104477 | MAIN SWITCH OT80F3 L105 KIT | 1 |
| Note: TO / BIS / JUSQU'AU 30/06/2015 | | | |
| 1 | 2104473 | MAIN SWITCH OT63F3 L105 KIT | 1 |
| Note: FROM / AB / À PARTIR DU 01/07/2015 | | | |
| 2 | 4184784 | CONTROL PANEL HMI SC KIT | 1 |
| 2 | 4185259 | ASSEMBLY DISPLAY SC PKG VP. | 1 |
| Note: DISPLAY ALONE / PLATINE SEULE | | | |
| 3 | 4185257 | ASSEMBLY CPU SCe Booster VP. | 1 |
| 5 | 2046288 | CIRCUIT BREAKER S201 B16 | 1 |
| 4 | 2051217 | AUTOM.CIRCUIT BREAKER S203 B16 TO7,5kW | 1 |
| 6 | 4194956 | PATCH CABLE RJ45 CAT6 1,0M BLUE SC-PANEL | 1 |

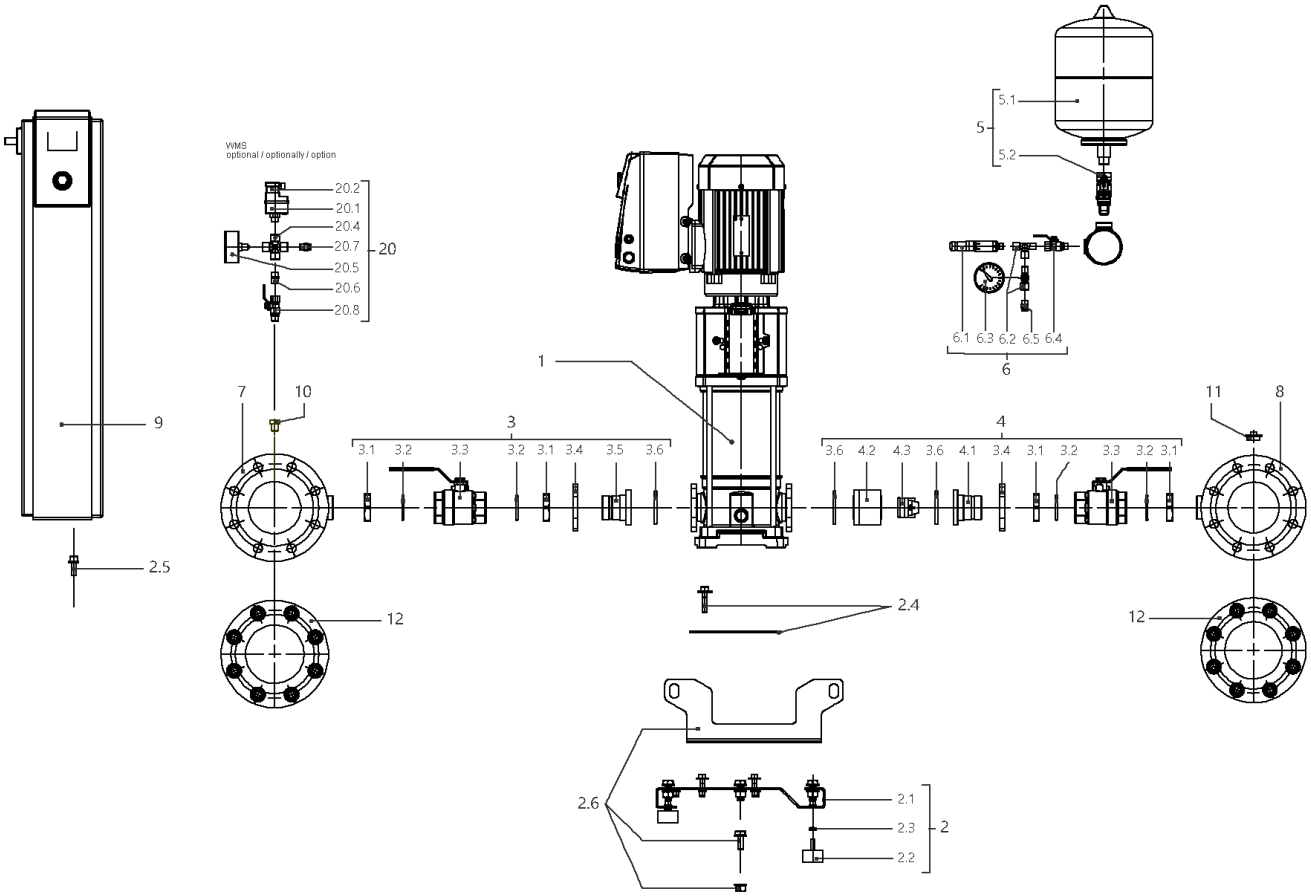
VIMS
optional / optionally / option
20.2
20.1
20.4
20.7
20.5
20.6
20.8
20
5.1
5
5.2
6.1 6.3 6.2 6.5 6.4
6
1
7
10
3
3.1 3.2 3.3 3.2 3.1 3.4 3.5 3.6
4
3.6 4.2 4.3 3.6 4.1 3.4 3.1 3.2 3.3 3.2 3.1
11
8
9
2.5
12
2.4
12
2.6
2.1
2.3
2
2.2

## SiBoost Smart 4HELIX VE1603/4kW (2536342)

| Item | Article no. | Description | Quantity |
|---|---|---|---|
| 1 | | HELIX VE1603-4.0-1/16/E/S | 1 |
| Note: TO / BIS / JUSQU'AU 30/04/2016 | | | |
| 1 | 4201561 | HELIX VE1603-4.0-1/16/E/S | 1 |
| Note: FROM / AB / À PARTIR DU 01/05/2016 | | | |
| 2 | 4197134 | BASE PLATE DE4 1450x420 KIT | 1 |
| 2.1 | | > BASEPLATE_4x4/6/10/16V_E300_BOX_150 | 1 |
| 2.2 | 2028654 | > VIBRATION DAMPER D.50X30 M10X28 | 1 |
| 2.3 | 2028281 | > NUT M10 DIN936 (ISO4035) 17H VZ | 1 |
| 2.4 | 4197083 | > HOLDER PUMP Helix 10/16 KIT | 1 |
| 2.5 | 4197084 | > HOLDER SWITCHBOX WILO Smart Control KIT | 1 |
| 2.6 | 4197117 | > LIFTING Siboost HELIX SC KIT | 1 |
| 3 | 4197072 | SUCTION SIDE Siboost Helix10/16 KIT | 1 |
| 3.1 | 2032623 | > NUT G1 1/2"SW55 MS | 1 |
| 3.2 | 2032616 | > O-RING ID.44X3,53N DIN3771 E7502 | 1 |
| 3.2 | 2534877 | > BALL TAP KDW40-H G11/2I-I-DN40 DVGW | 1 |
| 3.4 | 2032626 | > OVAL FLANGE D52-LK100 ST-VZ | 1 |
| 3.5 | 2032627 | > UNION INSERT DN40 LAPPED FLANGE | 1 |
| 3.6 | 2032628 | > O-RING ID.56,52X5,33N DIN3771 E7502 | 1 |
| 4 | 4197829 | DELIVERY SIDE Siboost Helix V16 KIT | 1 |
| 3.1 | 2032623 | > NUT G1 1/2"SW55 MS | 1 |
| 3.2 | 2032616 | > O-RING ID.44X3,53N DIN3771 E7502 | 1 |
| 3.3 | 2534877 | > BALL TAP KDW40-H G11/2I-I-DN40 DVGW | 1 |
| 3.4 | 2032626 | > OVAL FLANGE D52-LK100 ST-VZ | 1 |
| 4.1 | 2054274 | > UNION INSERT DN40 LAPPED FLANGE(W.COLLAR | 1 |
| 4.2 | 2054270 | > HOUSING RFV(RV-IN) DN50 MS VP. | 1 |
| 4.3 | 2028284 | > NON-RETURN DEVICE UNIT NV50/DN50 VP. | 1 |
| 3.6 | 2032628 | > O-RING ID.56,52X5,33N DIN3771 E7502 | 1 |
| 5 | 2032642 | DIAPHREM TANK 8L/PN16 DIN4807/T5 KIT | 1 |
| 5.1 | 2045914 | > DIAPHREM TANK 8L TYP-DD 16BAR | 1 |
| 5.2 | 2027853 | > FLOW FITTING G3/4 FOR DIAPHRAGM VES. | 1 |
| 6 | 4197076 | PRESSURE SENSOR/ GAUGE 0-16BAR KIT | 1 |
| 6.1 | 2085909 | > PRESS.SENSOR 1/4" 0-16BAR 4-20MA VP. | 1 |
| 6.2 | 4197077 | > T-PIECE 1/4" VP. | 1 |
| 6.3 | 2028692 | > PRESSURE GAUGE NG63-PN16-G1/4 | 1 |

| Item | Article no. | Description | Quantity |
|---|---|---|---|
| 6.4 | 2028291 | > BALL TAP R1/4" PN42 GIACOMINI R254DL | 1 |
| 6.5 | 2028691 | > BLOWGUN 1/4" MS 30BAR VP. | 1 |
| 7 | 4197836 | PIPE DE4 DN100-4x11/2"+2x1/4x1200 VP. | 1 |
| 8 | 4197837 | PIPE DE4 DN100-4x11/2"+2x1/4+1x3/4x1200 | 1 |
| 9 | | W-CTRL-SCE-B-4x4,0KW-T4-FM-ND2 | 1 |
| Note: TO / BIS / JUSQU'AU 18/05/2014 | | | |
| 9 | 2541907 | W-CTRL-SCE-B-4x13A-T34-FM-ND2-AVC-PKG | 1 |
| Note: FROM / AB / À PARTIR DU 19/05/2014 - TO / BIS / JUSQU'AU 16/10/2017 | | | |
| 9 | 2541903 | W-CTRL-SCE-B-4x10A-T34-FM-ND2-AVC-PKG | 1 |
| Note: FROM / AB / À PARTIR DU 17/10/2017 | | | |
| 10 | 4197079 | PLUG G1/4"x10 AISI304 KIT | 1 |
| 11 | 2032654 | PLUG R3/4" MS VIEGA 1751 | 1 |
| 12 | 4197835 | BLIND-FLANGE DN100 PN16 -1.4404 KIT | 1 |
| | 2106342 | > FLAT GASKET D.120/162X2 DN100 C4430 VP. | 1 |
| | | > NUT M16 DIN934 A2 1.4301 | 1 |
| | | > SCREW M16x70 DIN933 A2 (8 PIECES) | 1 |
| | | > WASHER A17 DIN125 A2 | 1 |
| | | > FULL FLANGE ST.DN100 PN16 EN1092-1/05 A | 1 |
| | | > FLANGE COVER DN100 DIN 3443 FORM A | 1 |
| 20 | | ASSEMBLY WMS. DE-EB. +VP | 1 |
| 20.1 | 2028652 | > PRESSURE SWITCH PS3-ASR 1/(1,3) VP. | 1 |
| 20.2 | 2130983 | > PLUG PS3-415 WITH KABEL 1,5M 2NO VP. | 1 |
| 20.4 | 2028290 | > CROSSPIECE R1/4" MS-NICKEL | 1 |
| 20.5 | 2028687 | > PRESSURE GAUGE NG63 R1/4" HI.0-6BAR | 1 |
| 20.6 | 2054268 | > DUAL NIPPLE G1/4" x G1/4" MS VP. | 1 |
| 20.7 | 2028691 | > BLOWGUN 1/4" MS 30BAR VP. | 1 |
| 20.8 | 2028291 | > BALL TAP R1/4" PN42 GIACOMINI R254DL | 1 |

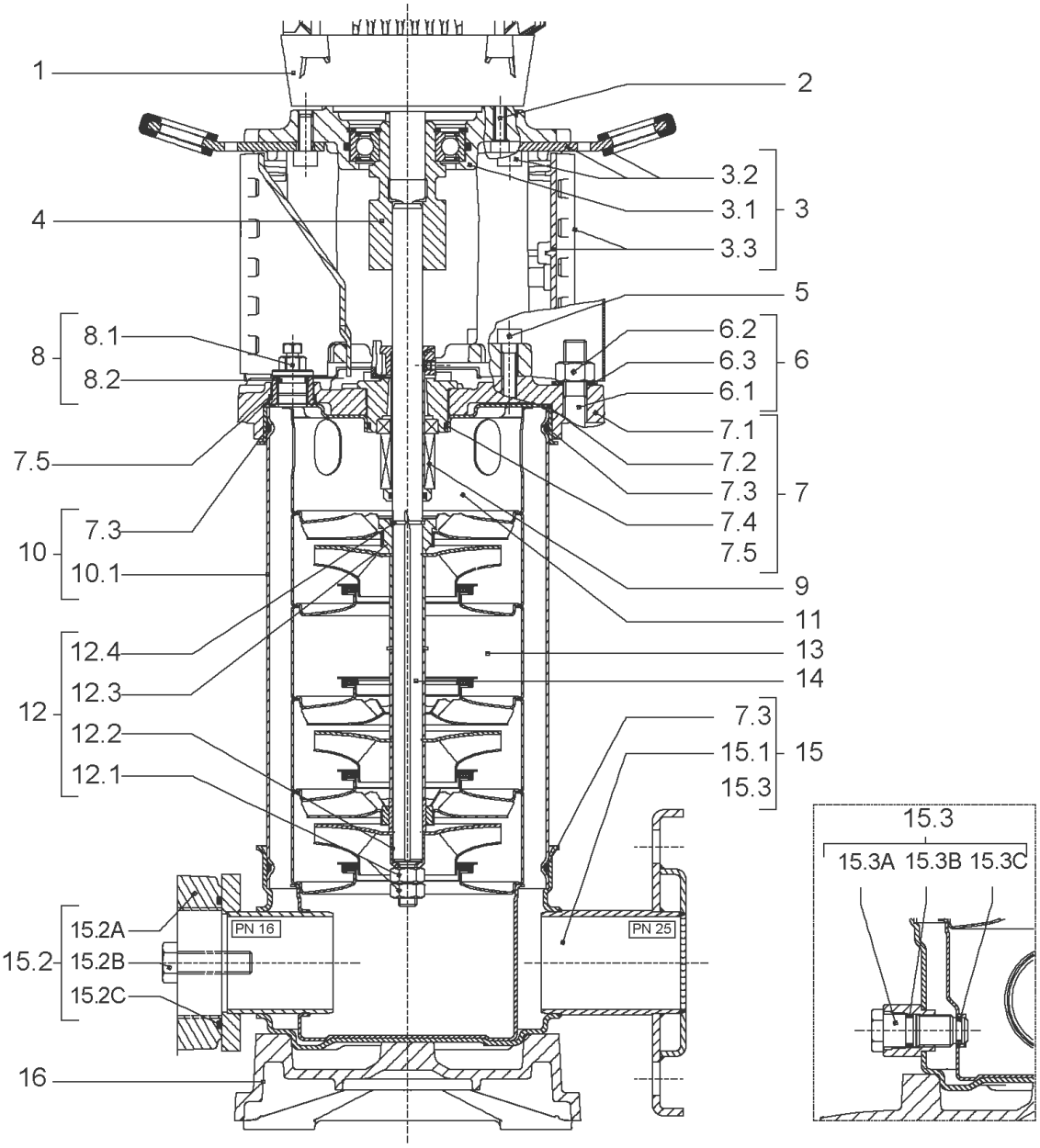
1
2
3.2
3.1
3
3.3
4
5
8.1
8
8.2
6.2
6.3
6
6.1
7.1
7.5
7.2
7.3
7
7.4
7.3
10
7.5
10.1
9
11
12.4
13
12.3
14
12
12.2
7.3
15.1
15
12.1
15.3
15.3
15.3A 15.3B 15.3C
15.2A
PN 16
PN 25
15.2
15.2B
15.2C
16

| Item | Article no. | Description | Quantity |
|---|---|---|---|
| 1 | | DRIVE HELIX-VE1603-IE2-ATB KIT | 1 |
| Note: MOTOR BRAND ATB | | | |
| 1 | | DRIVE HELIX-VE1603-IE2-WE KIT | 1 |
| Note: MOTOR BRAND WILO ELEC | | | |
| 1 | | DRIVE HELIX-VE1603-4T-IE4-WE-KIT | 1 |
| Note: MOTOR BRAND WILO ELEC | | | |
| 2 | 4159703 | SCREW M8X40 (4 PIECES) | 1 |
| 3 | 4172789 | LANTERN FT130 HELIX V10 KIT | 1 |
| 3.1 | | > M+5_6_LANTERN_ONE-PIECE_FT130_CATA | 1 |
| 3.2 | 2127604 | > EYELET CPL.FT HELIX(2 PIECES) | 1 |
| 3.3 | 4159692 | > COUPLING PROTECTOR FT HELIX KIT | 1 |
| 4 | 4159710 | COUPLING D.16XD.28 FT130 HELIX KIT | 1 |
| 5 | 4159707 | SCREW M8X30 (4 PIECES) | 1 |
| 6 | 4177817 | STUD BOLT M12X341 KIT | 1 |
| 6.1 | | > TIE BOLT M12-341x18x30-1.4057 | 1 |
| 6.2 | 2094647 | > NUT M12 M12 ISO4032 VP. | 1 |
| 6.3 | 2123557 | > WASHER CS-12.4-24-1.6-NFE25 (4 PIECES) | 1 |
| 7 | 4210143 | STATIONARY RING HOLDER HELIX 6" EPDM | 1 |
| 7.2 | 2127607 | > STATIONARY RING HOLDER 6" HELIX 1.4301 V | 1 |
| 7.3 | 4176513 | > O-RING FOR PUMP JACKET VP. | 1 |
| 7.4 | 2127603 | > O-RING ID.37,6x2,4 EPDM VP. | 1 |
| 7.5 | 2127602 | > O-RING ID.21,35x2 EPDM VP. | 1 |
| 8 | 4159686 | FILING/PURGING PLUG HELIX EPDM KIT | 1 |
| 9 | 4171327 | SEAL-KIT-HELIX6-10-16 O/E KIT | 1 |
| 10 | 2127575 | HOUSING PIPE D.152x210 1.4301 KIT | 1 |
| 11 | 2127588 | CENTERING STAGE-RETURN HELIX16 1.4301 VP | 1 |
| 12 | 4209329 | SHAFT EQUIPMENT HELIX V16 KIT | 1 |
| 12.1 | | > NUT-H-M10-A4.70 | 1 |
| 12.2 | | > SERRATED LOCK WASHER M+16M3-316L | 1 |
| 12.3 | | > IMPELLER STOP RING L35,9-304 | 1 |
| 12.4 | | > STOP-RUSH-1/2-D16xd2-M+316 | 1 |
| 13 | | HYDRAULIC HELIX V 1603 1.4307 | 1 |
| 14 | 2127564 | SHAFT D.16X330 1.4301 VP. | 1 |
| 15 | 4217899 | PUMP HOUSING HELIX DN50 PN16 1.4301 KIT | 1 |

| Item | Article no. | Description | Quantity |
|---|---|---|---|
| 7.3 | 4176513 | > O-RING FOR PUMP JACKET VP. | 1 |
| 15.1 | | > BLASTING PPE HOUSING V-PN16-DN50-304 | 1 |
| 15.2 | 4217895 | > COUNTER FLANGE-G2"-PN16-GJL KIT | 1 |
| 15.3 | 4171321 | > PRIMING/DRAIN PLUG EPDM HELIX KIT | 1 |
| 16 | 2127601 | BASEPLATE HELIX V16 VP. | 1 |

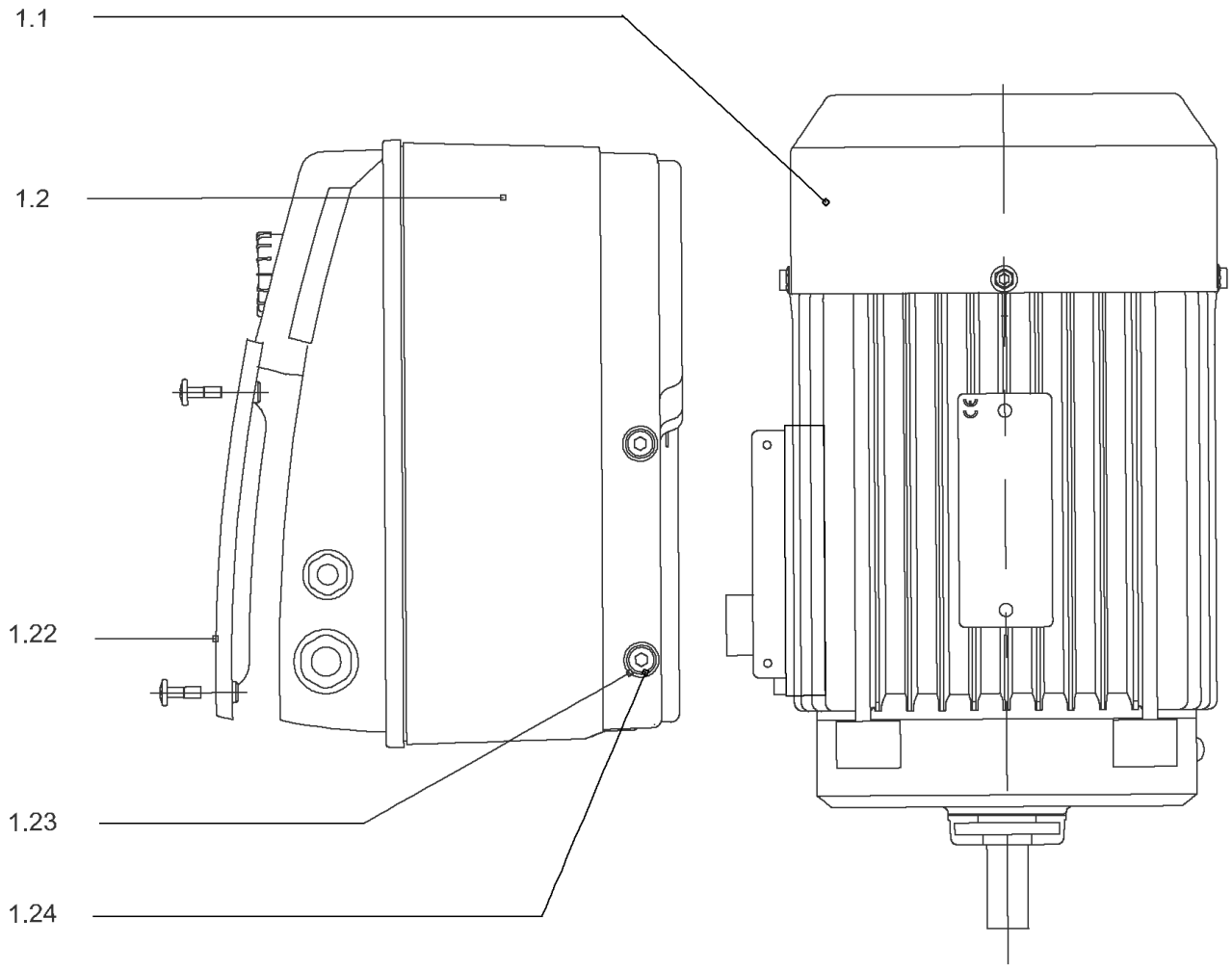
1.1
1.2
1.22
1.23
1.24

## DRIVE HELIX-VE1603-IE2-ATB KIT

| Item | Article no. | Description | Quantity |
|---|---|---|---|
| 1.1 | | MOTOR 4/2/112 3~ 380V 60HZ IE2 ATB VP. | 1 |
| Note: no longer available /nicht mehrlieferbarn'est plus disponible | | | |
| | | SPARE PARTS MOTOR:ON REQUEST | 1 |
| 1.2 | 4179126 | MODULE HELIX-VE1603-IE2-ATB KIT | 1 |
| 1.22 | 2054227 | > MODULE COVER/GASKET TL3/4 KIT | 1 |
| 1.23 | 4215716 | > SCREW M5X16 DIN912 8.8 A2A (4pieces) VP. | 1 |
| 1.24 | 2057978 | > RONDELLE A5,3 DIN6797 FST ZN (4 PIECES) | 1 |

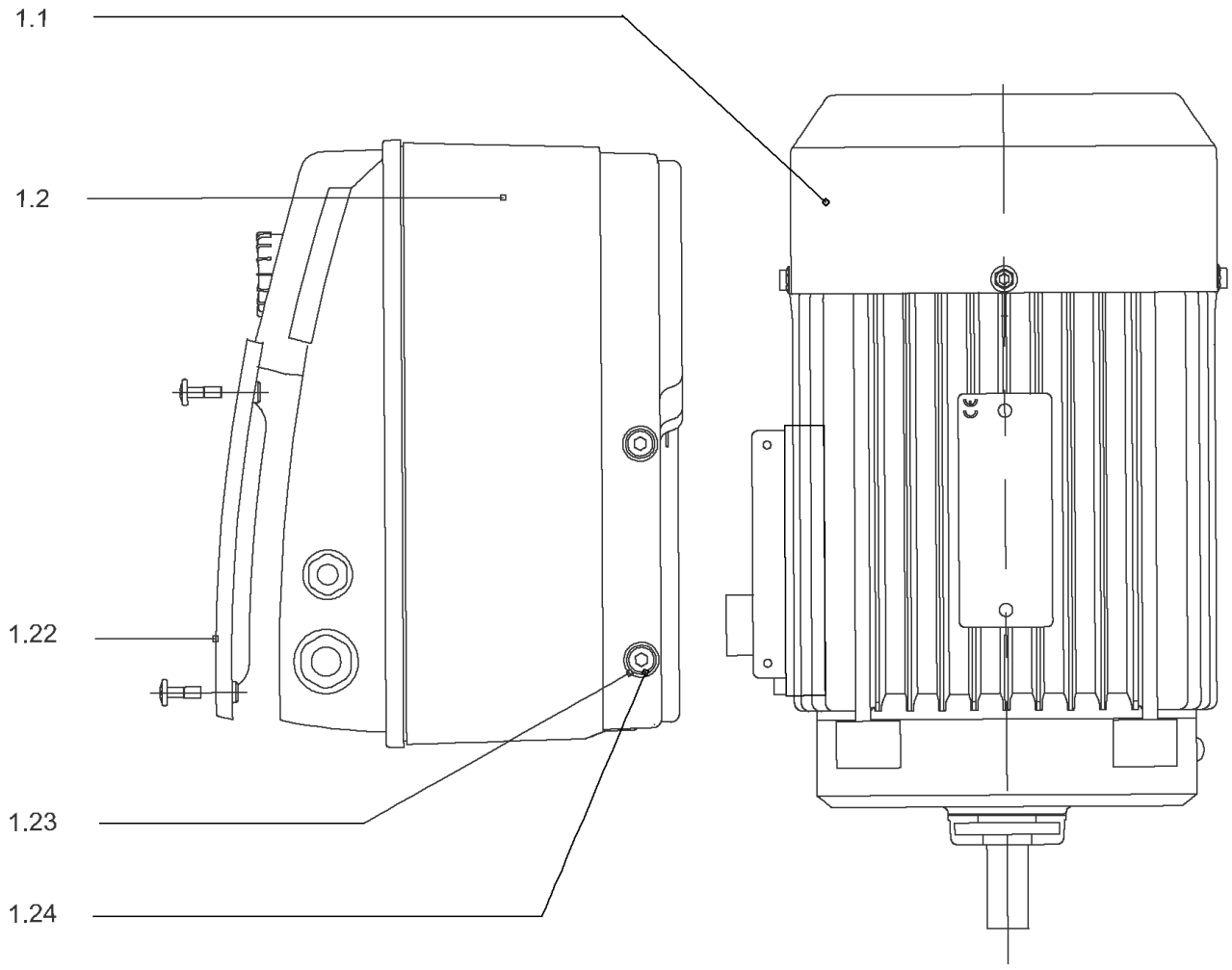
1.1
1.2
1.22
1.23
1.24

## DRIVE HELIX-VE1603-IE2-WE KIT

| Item | Article no. | Description | Quantity |
|---|---|---|---|
| 1.1 | 4188824 | MO.4/2/112 3~380V 60Hz IE2 WE VP. | 1 |
| | | SPARE PARTS MOTOR:ON REQUEST | 1 |
| 1.2 | 4188825 | MODULE HELIX-VE1603-4.0-IE2-WE KIT | 1 |
| 1.22 | 2054227 | > MODULE COVER/GASKET TL3/4 KIT | 1 |
| 1.23 | 4215716 | > SCREW M5X16 DIN912 8.8 A2A (4pieces) VP. | 1 |
| 1.24 | 2057978 | > RONDELLE A5,3 DIN6797 FST ZN (4 PIECES) | 1 |

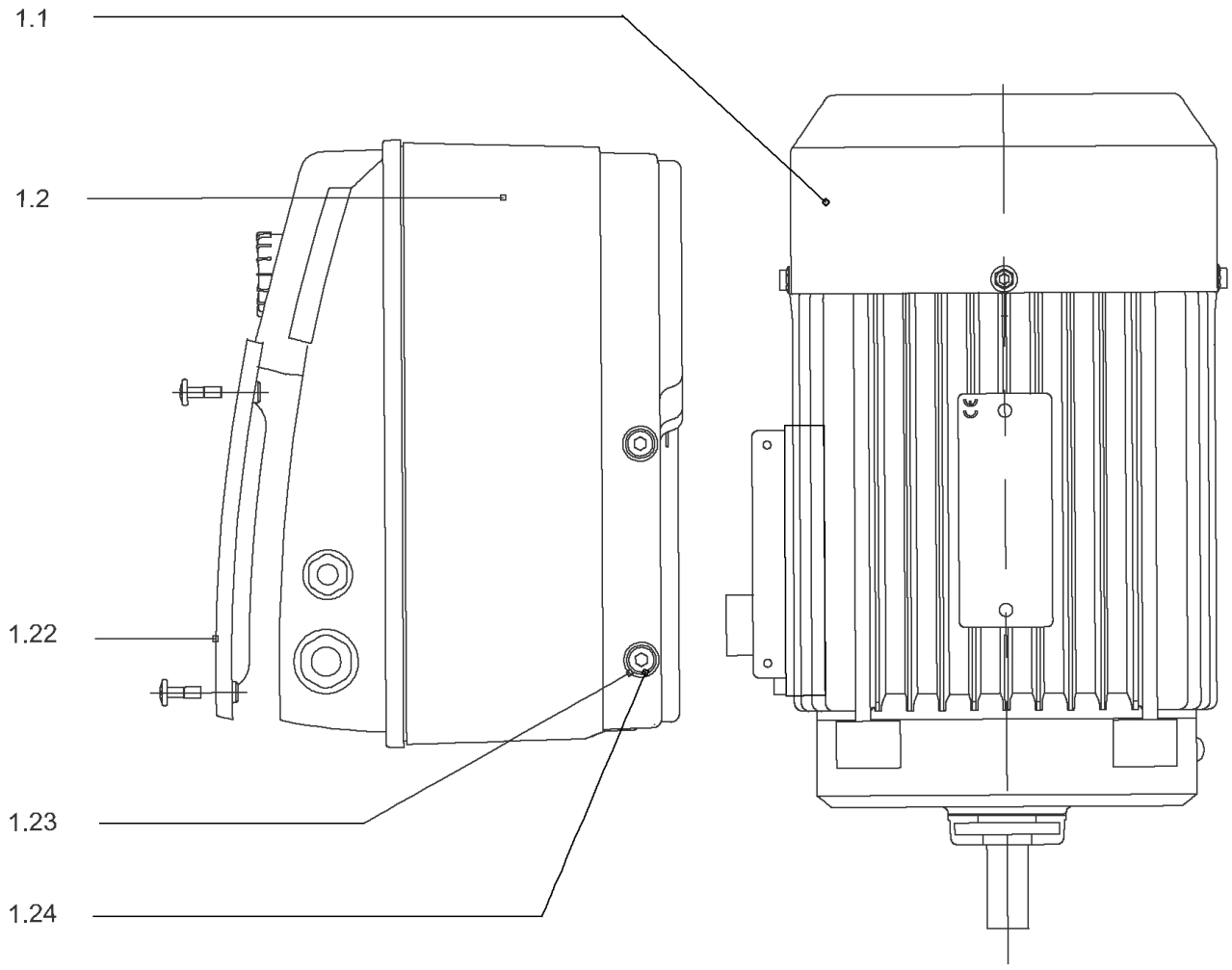
1.1
1.2
1.22
1.23
1.24

## DRIVE HELIX-VE1603-4T-IE4-WE-KIT

| Item | Article no. | Description | Quantity |
|---|---|---|---|
| 1.1 | 4207924 | MOTOR 4/2/112 3~ 380V 60HZ IE4 WE VP. | 1 |
| | | SPARE PARTS MOTOR:ON REQUEST | 1 |
| 1.2 | 4209607 | MODULE HELIX-VE1603-4.0-IE4-WE KIT | 1 |
| 1.22 | 2054227 | > MODULE COVER/GASKET TL3/4 KIT | 1 |
| 1.23 | 4215716 | > SCREW M5X16 DIN912 8.8 A2A (4pieces) VP. | 1 |
| 1.24 | 2057978 | > RONDELLE A5,3 DIN6797 FST ZN (4 PIECES) | 1 |

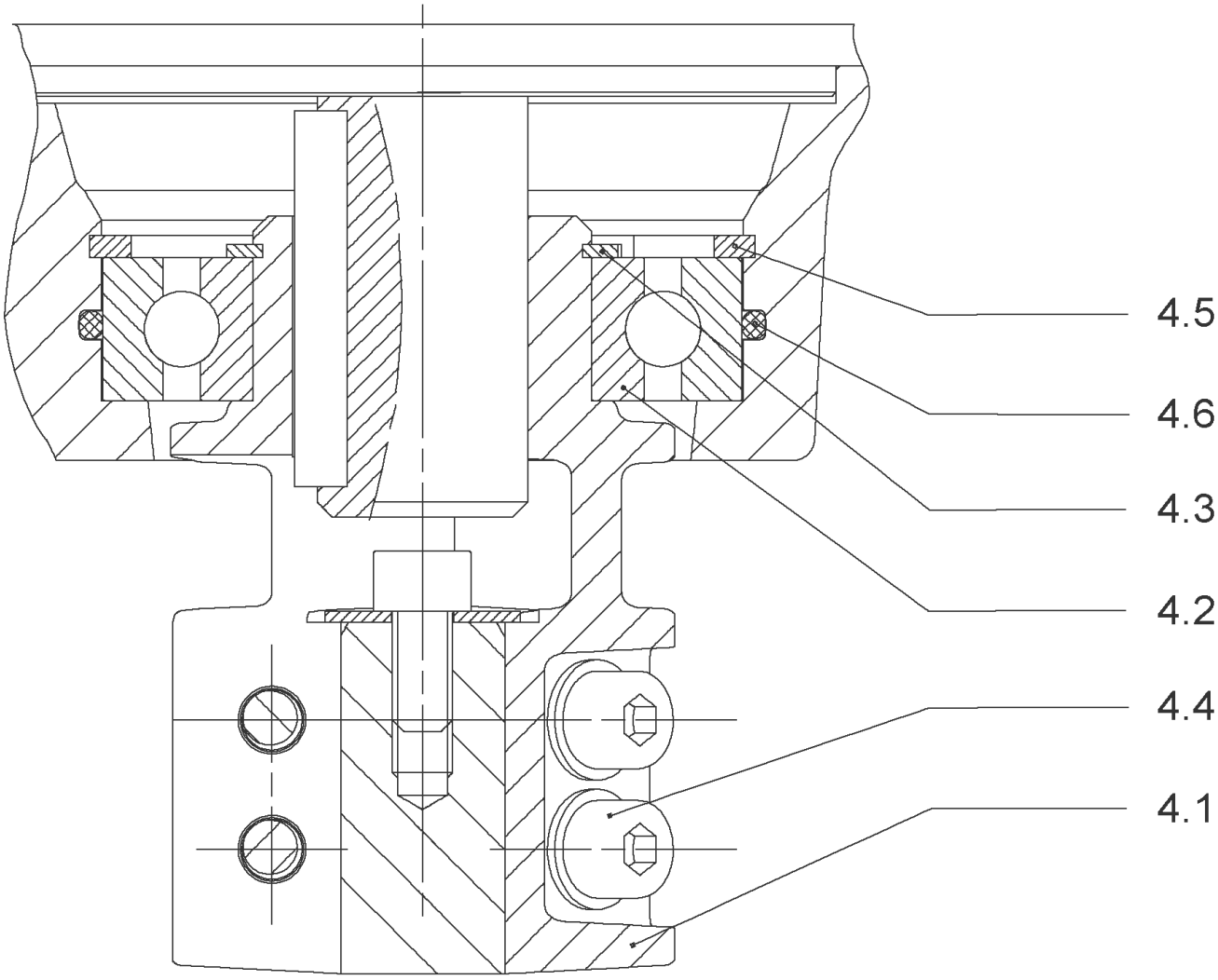
4.5
4.6
4.3
4.2
4.4
4.1

## COUPLING D.16XD.28 FT130 HELIX KIT (4159710)

| Item | Article no. | Description | Quantity |
|---|---|---|---|
| 4.1 | | COUPLING M+ Ø16XØ28 FT130 MACHINED | 1 |
| 4.2 | 2131022 | BALL BEARING 6209/ZZ-C3(HT)VP. | 1 |
| 4.3 | 4233930 | CIRCLIP-FOR-BORES-D45x1,75 VP. | 1 |
| 4.4 | 4157726 | SCREW KIT M8X30 (4 PIECES) | 1 |
| 4.5 | 4234252 | CIRCLIPS 85X3 VP. | 1 |
| 4.6 | 4234243 | O-RING 85X3 VP. | 1 |
| | | NOMEL CONTACT WASHER 8x16x1,4 STEEL ZC | 1 |

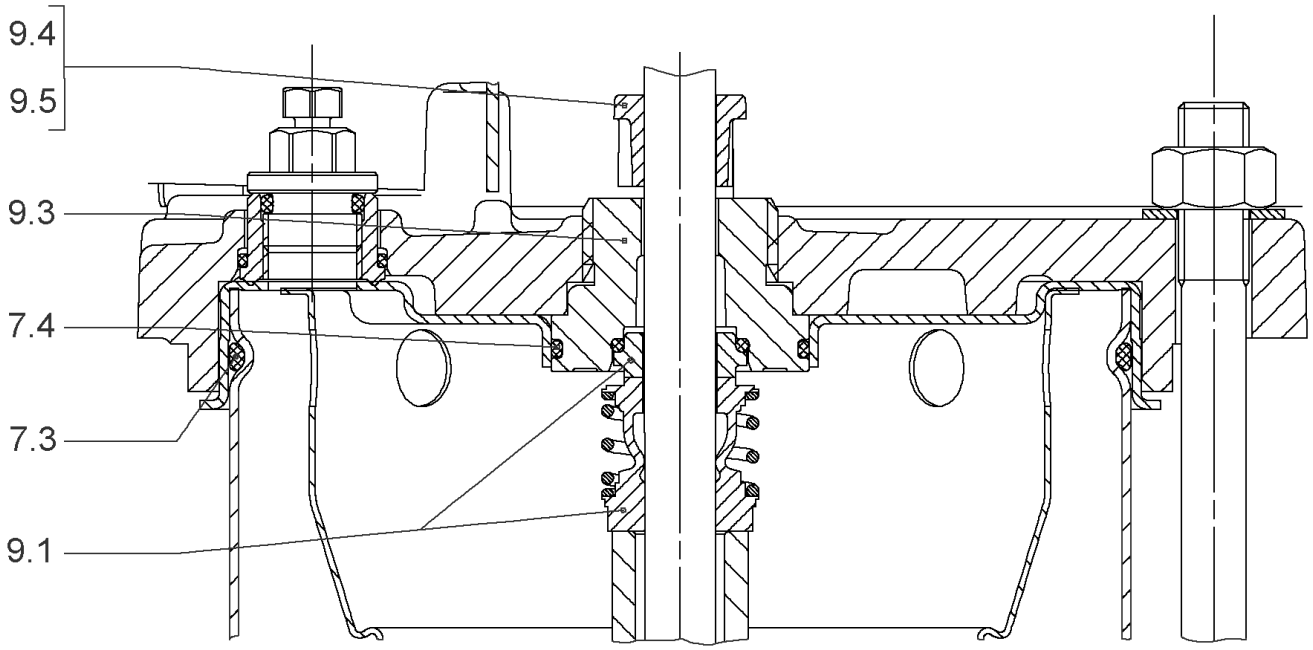
9.4
9.5
9.3
7.4
7.3
9.1

## SEAL-KIT-HELIX6-10-16 O/E KIT (4171327)

| Item | Article no. | Description | Quantity |
|---|---|---|---|
| 7.3 | 4176513 | O-RING FOR PUMP JACKET VP. | 1 |
| 7.4 | 2127603 | O-RING ID.37,6x2,4 EPDM VP. | 1 |
| 9.1 | 4177801 | MECH.SEAL HELIX6-10-16 O/E VP. | 1 |
| 9.3 | 4177798 | MACHINED RING HOLDER M+6" Ø16 304 VP. | 1 |
| 9.5 | 4177799 | MACHINED DRIVE RING Ø16 VP. | 1 |
| 9.4 | 4176520 | SCREW CH M5x5 A4-70 ( 3PIECES ) | 1 |

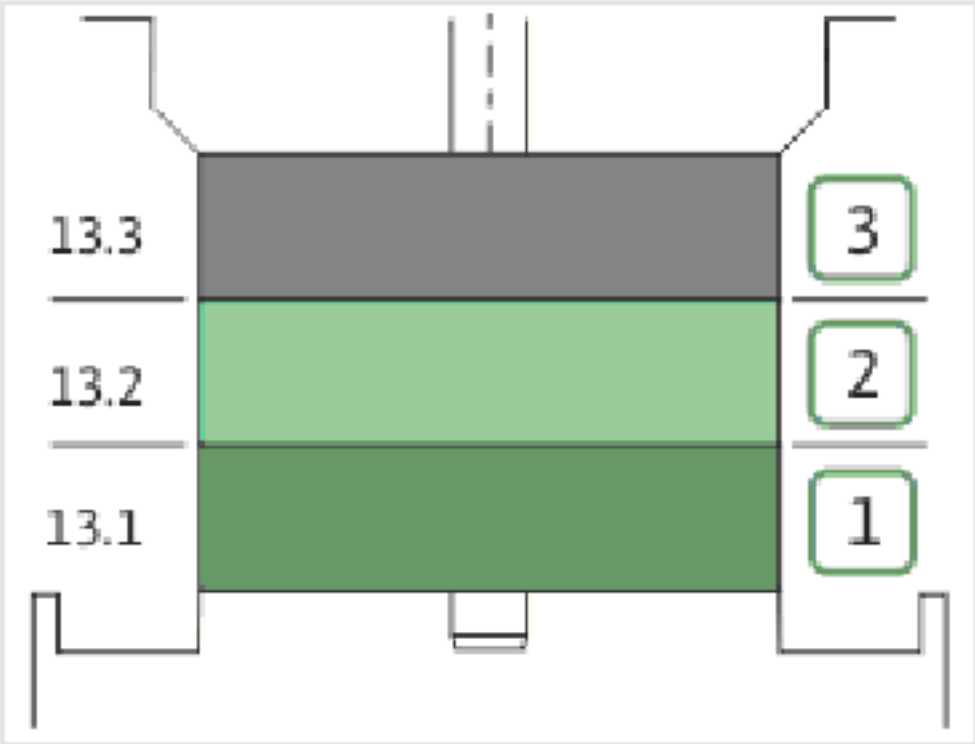
13.3
13.2
13.1
3
2
1

| Item | Article no. | Description | Quantity |
|---|---|---|---|
| 13.1 | 4159720 | STAGE HELIX 16 1.4301 KIT | 1 |
| | | > MACH.STG-CASING-WOGV-WNR-M+16-304 | 1 |
| | | > IMPELLER-M+16-304 | 1 |
| 13.2 | 4159714 | STAGE BEARING HELIX 16 1.4301 KIT | 1 |
| | | > MACH.BEARING-STG-CASING-WNR-M+16-304 | 1 |
| | | > IMPELLER-M+16-304 | 1 |
| | | > SLEEVE-SPACER-Ø19,35x30,665-304 | 1 |
| | | > SHAFT-SLEEVE-D16xD20x18-CW | 1 |
| 13.3 | 4159715 | INTERMEDIATE STAGE HELIX 16 1.4301 KIT | 1 |
| | | > CORPS-ETG-STD-ACR-AJR-USIN.M+16-304 | 1 |
| | | > IMPELLER-M+16-304 | 1 |
| | | > SPACER Ø16X19.4-L48.6-304 | 1 |

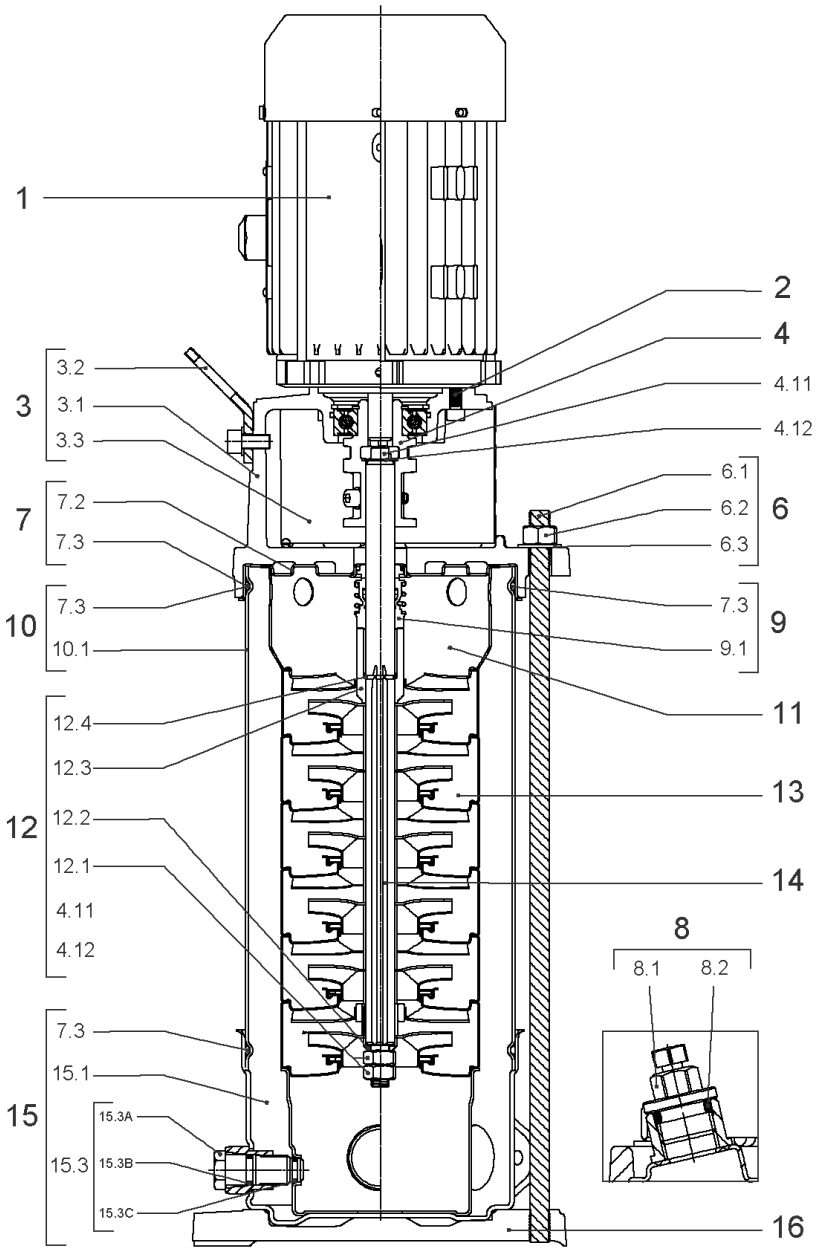
1
2
4
4.11
4.12
3
3.2
3.1
3.3
7
7.2
7.3
10
7.3
10.1
12
12.4
12.3
12.2
12.1
4.11
4.12
15
7.3
15.1
15.3
15.3A
15.3B
15.3C
6
6.1
6.2
6.3
9
7.3
9.1
11
13
14
8
8.1
8.2
16

## HELIX VE1603-4.0-1/16/E/S (4201561)

| Item | Article no. | Description | Quantity |
|---|---|---|---|
| 1 | | DRIVE HELIX-VE1603-4T-IE4-WE-KIT | 1 |
| Note: MOTOR BRAND WILO ELEC | | | |
| | | SPARE PARTS MOTOR:ON REQUEST | 1 |
| 2 | 4159707 | SCREW M8X30 (4 PIECES) | 1 |
| 3 | 4214473 | LANTERN FT130 HELIX KIT | 1 |
| 3.1 | | > LANT-MOT-VMI-ReDTC6"-FT130-MACHINED+CATA | 1 |
| 3.2 | 4184852 | > EYELET CPL.FT HELIX (2 PIECES) | 1 |
| 3.3 | 4213782 | > COUPLING PROTECTOR FT115/130 HELIX KIT | 1 |
| 4 | 4159710 | COUPLING D.16XD.28 FT130 HELIX KIT | 1 |
| 6 | 2127553 | STUD BOLT M12X341 KIT | 1 |
| 7 | 4214481 | STATIONARY RING HOLDER HELIX D27 ReDTC | 1 |
| 7.2 | 4214479 | > STATIONARY RING HOLDER HELIX D27 VP. | 1 |
| 7.3 | 4176513 | > O-RING FOR PUMP JACKET VP. | 1 |
| 8 | 4212724 | FILING/PURGING PLUG HELIX ReDTC KIT | 1 |
| 8.1 | | > FILLING PLUG MVI6"-304 | 1 |
| 8.2 | 4177800 | > O-RING EPDM PLUG HELIX VP. | 1 |
| 9 | 4214483 | MECH.SEAL HELIX6-10-16 O/E ReDTC KIT | 1 |
| 9.1 | 4177801 | > MECH.SEAL HELIX6-10-16 O/E VP. | 1 |
| 7.3 | 4176513 | > O-RING FOR PUMP JACKET VP. | 1 |
| 10 | 2127575 | HOUSING PIPE D.152x210 1.4301 KIT | 1 |
| 11 | 2127588 | CENTERING STAGE-RETURN HELIX16 1.4301 VP | 1 |
| 12 | 4214520 | SHAFT EQUIPMENT HELIX V16 ReDTC KIT | 1 |
| 12.1 | | > NUT-H-M10-A4.70 | 1 |
| 12.2 | | > SERRATED LOCK WASHER M+16M3-316L | 1 |
| 12.3 | | > 1/2-SNAP-RING-16M3-316L | 1 |
| 12.4 | | > STOP-RUSH-1/2-D16xd2-M+316 | 1 |
| 4.11 | | > SCREW CHC-M6X14-8.8-ISO4762-GEOMET500A | 1 |
| 4.12 | | > WASHER D.24 L6U ZINK | 1 |
| 13 | | HYDRAULIC HELIX V 1603 1.4307 | 1 |
| 14 | 4214495 | SHAFT D.16X278 HELIX 1.4057 VP. | 1 |
| 15 | 4217899 | PUMP HOUSING HELIX DN50 PN16 1.4301 KIT | 1 |
| 7.3 | 4176513 | > O-RING FOR PUMP JACKET VP. | 1 |
| 15.1 | | > BLASTING PPE HOUSING V-PN16-DN50-304 | 1 |
| 15.2 | 4217895 | > COUNTER FLANGE-G2"-PN16-GJL KIT | 1 |

| Item | Article no. | Description | Quantity |
|---|---|---|---|
| 15.3 | 4171321 | > PRIMING/DRAIN PLUG EPDM HELIX KIT | 1 |
| 16 | 2127601 | BASEPLATE HELIX V16 VP. | 1 |

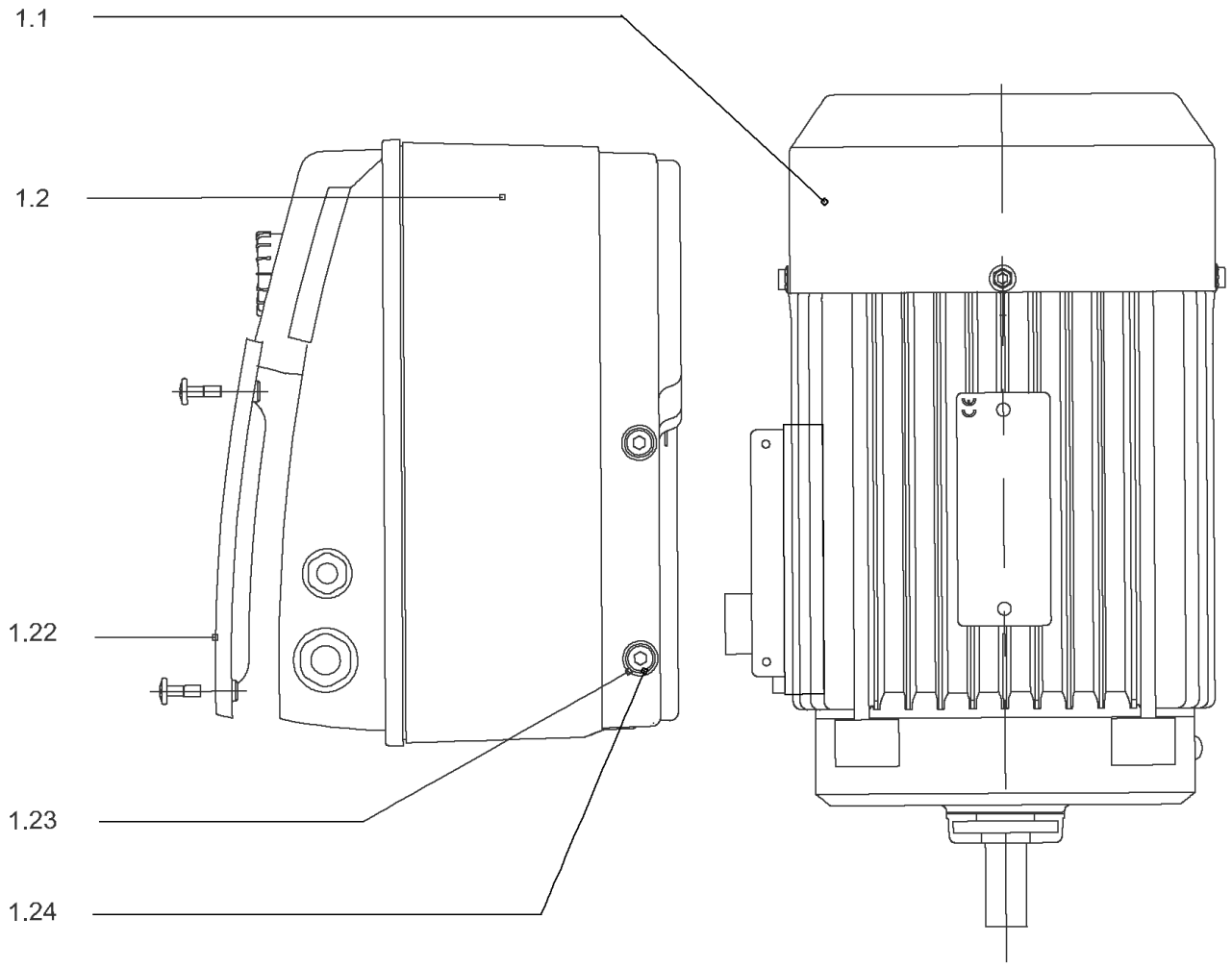
1.1
1.2
1.22
1.23
1.24

## DRIVE HELIX-VE1603-4T-IE4-WE-KIT

| Item | Article no. | Description | Quantity |
|---|---|---|---|
| 1.1 | 4207924 | MOTOR 4/2/112 3~ 380V 60HZ IE4 WE VP. | 1 |
| | | SPARE PARTS MOTOR:ON REQUEST | 1 |
| 1.2 | 4209607 | MODULE HELIX-VE1603-4.0-IE4-WE KIT | 1 |
| 1.22 | 2054227 | > MODULE COVER/GASKET TL3/4 KIT | 1 |
| 1.23 | 4215716 | > SCREW M5X16 DIN912 8.8 A2A (4pieces) VP. | 1 |
| 1.24 | 2057978 | > RONDELLE A5,3 DIN6797 FST ZN (4 PIECES) | 1 |

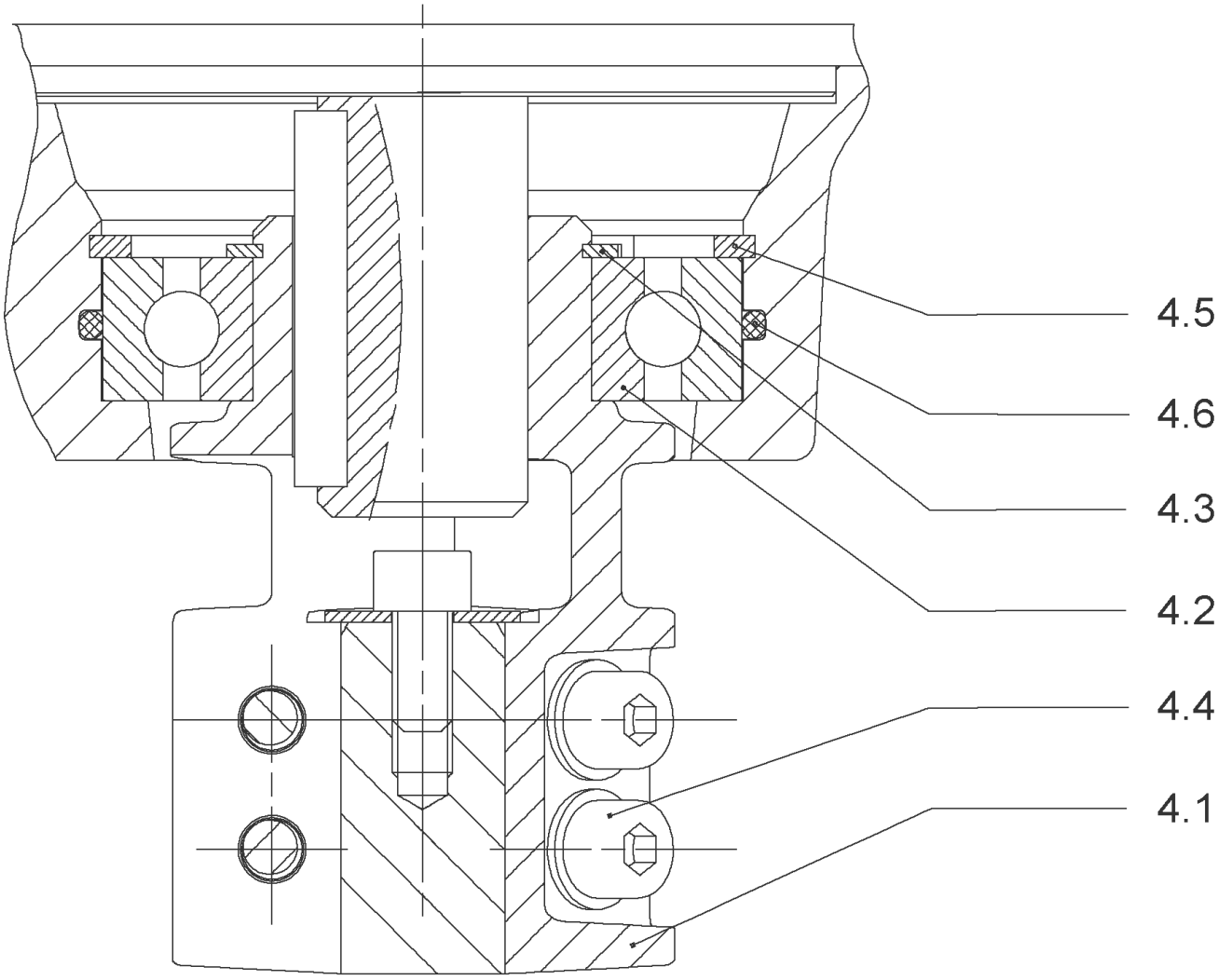
4.5
4.6
4.3
4.2
4.4
4.1

## COUPLING D.16XD.28 FT130 HELIX KIT (4159710)

| Item | Article no. | Description | Quantity |
|---|---|---|---|
| 4.1 | | COUPLING M+ Ø16XØ28 FT130 MACHINED | 1 |
| 4.2 | 2131022 | BALL BEARING 6209/ZZ-C3(HT)VP. | 1 |
| 4.3 | 4233930 | CIRCLIP-FOR-BORES-D45x1,75 VP. | 1 |
| 4.4 | 4157726 | SCREW KIT M8X30 (4 PIECES) | 1 |
| 4.5 | 4234252 | CIRCLIPS 85X3 VP. | 1 |
| 4.6 | 4234243 | O-RING 85X3 VP. | 1 |
| | | NOMEL CONTACT WASHER 8x16x1,4 STEEL ZC | 1 |

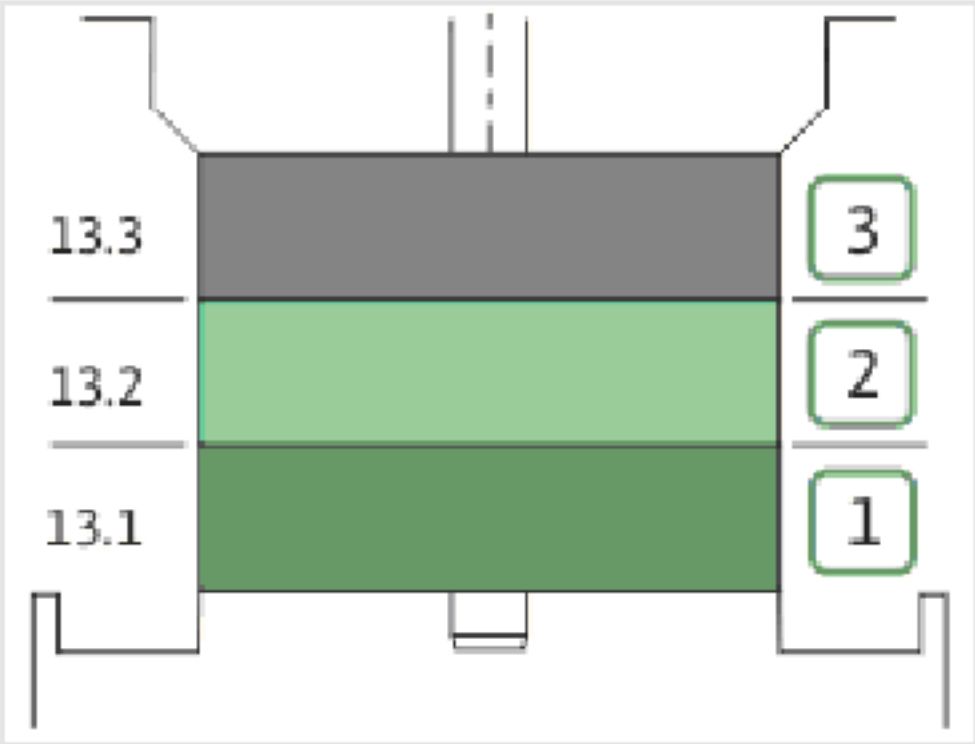
13.3
13.2
13.1
3
2
1

| Item | Article no. | Description | Quantity |
|---|---|---|---|
| 13.1 | 4159720 | STAGE HELIX 16 1.4301 KIT | 1 |
| | | > MACH.STG-CASING-WOGV-WNR-M+16-304 | 1 |
| | | > IMPELLER-M+16-304 | 1 |
| 13.2 | 4159714 | STAGE BEARING HELIX 16 1.4301 KIT | 1 |
| | | > MACH.BEARING-STG-CASING-WNR-M+16-304 | 1 |
| | | > IMPELLER-M+16-304 | 1 |
| | | > SLEEVE-SPACER-Ø19,35x30,665-304 | 1 |
| | | > SHAFT-SLEEVE-D16xD20x18-CW | 1 |
| 13.3 | 4159715 | INTERMEDIATE STAGE HELIX 16 1.4301 KIT | 1 |
| | | > CORPS-ETG-STD-ACR-AJR-USIN.M+16-304 | 1 |
| | | > IMPELLER-M+16-304 | 1 |
| | | > SPACER Ø16X19.4-L48.6-304 | 1 |

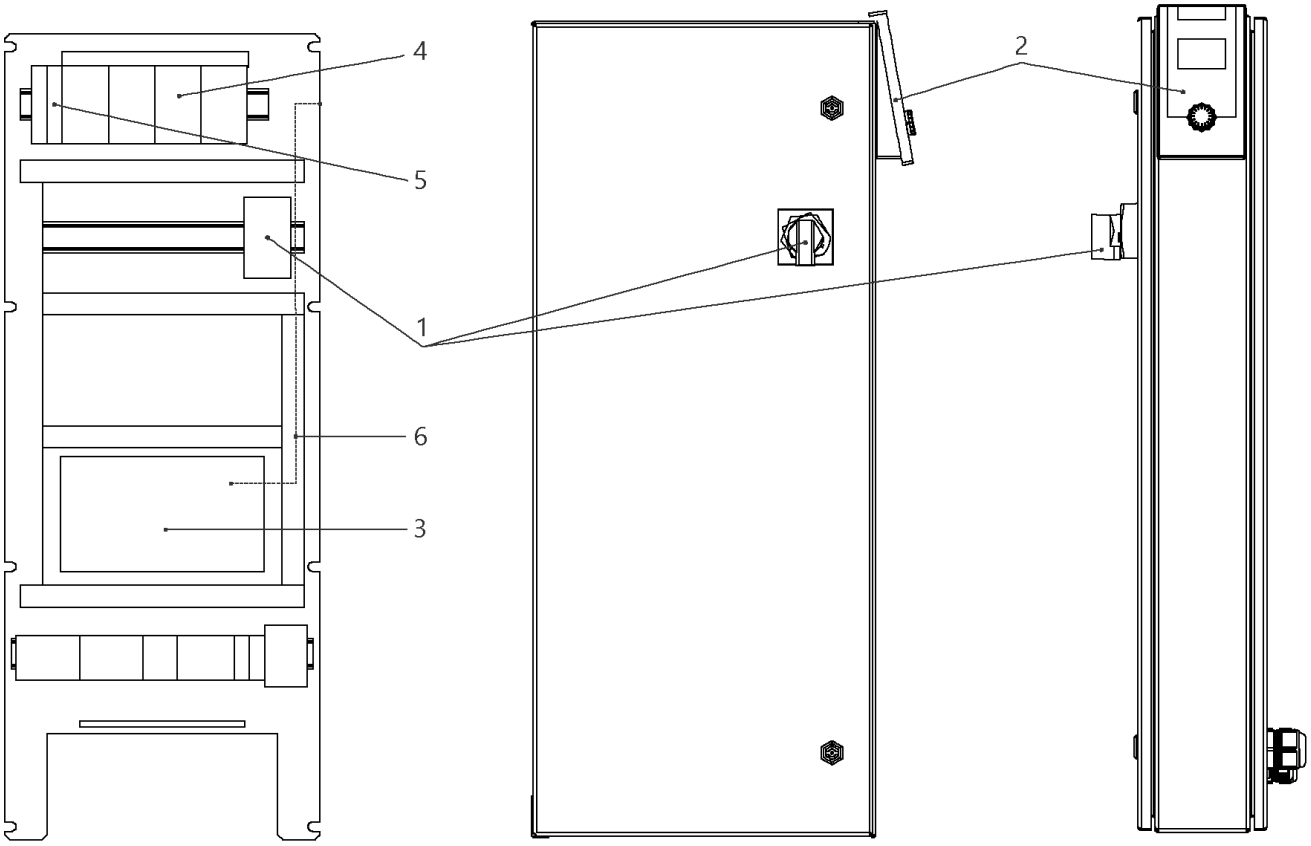
4
5
1
6
3
2

## W-CTRL-SCE-B-4x4,0KW-T4-FM-ND2

| Item | Article no. | Description | Quantity |
|---|---|---|---|
| 1 | 2104473 | MAIN SWITCH OT63F3 L105 KIT | 1 |
| 2 | 4184784 | CONTROL PANEL HMI SC KIT | 1 |
| 2 | 4185259 | ASSEMBLY DISPLAY SC PKG VP. | 1 |
| 3 | 4185257 | ASSEMBLY CPU SCe Booster VP. | 1 |
| 4 | 2051217 | AUTOM.CIRCUIT BREAKER S203 B16 TO7,5kW | 1 |
| 5 | 2046288 | CIRCUIT BREAKER S201 B16 | 1 |
| 6 | 4194956 | PATCH CABLE RJ45 CAT6 1,0M BLUE SC-PANEL | 1 |

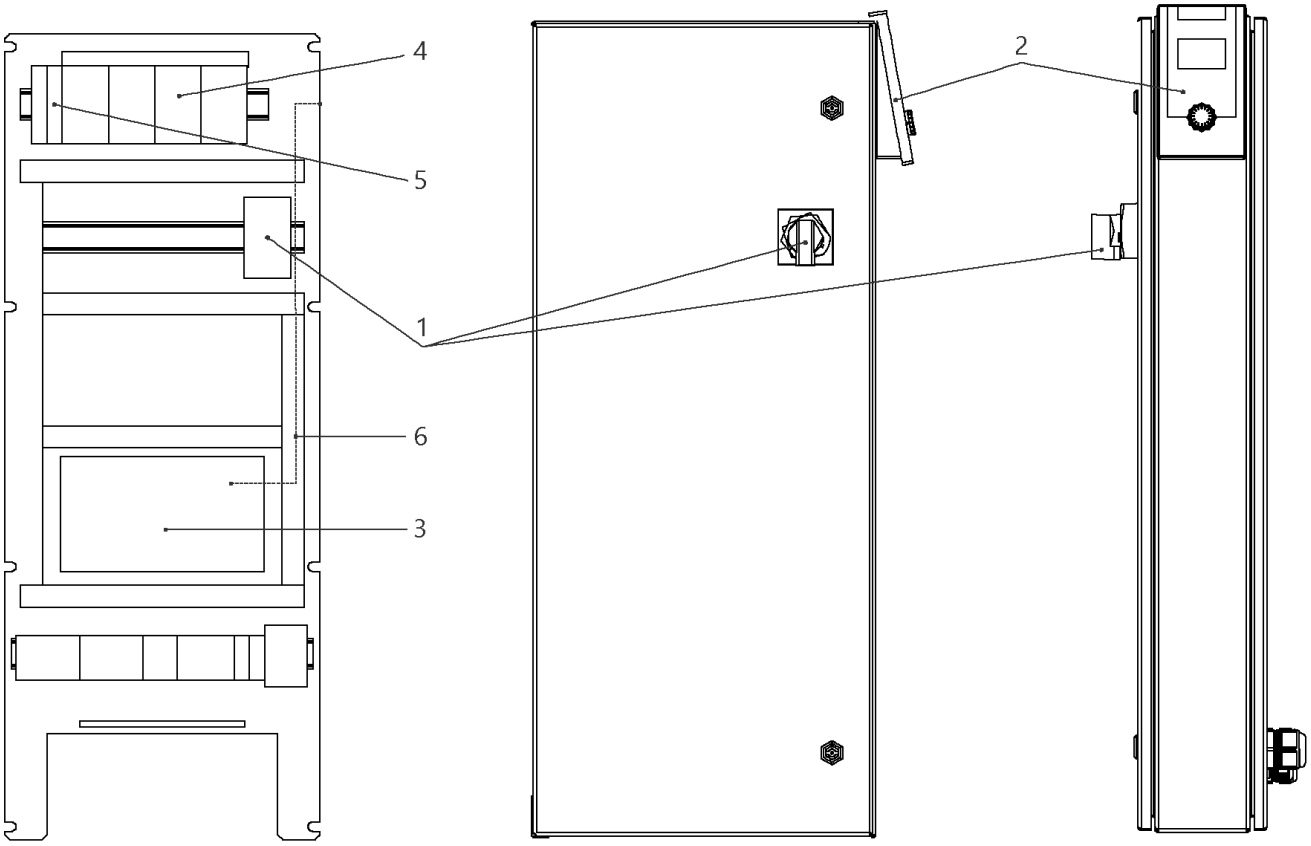
4
5
1
6
3
2

## W-CTRL-SCE-B-4x13A-T34-FM-ND2-AVC-PKG (2541907)

| Item | Article no. | Description | Quantity |
|---|---|---|---|
| 1 | 2104477 | MAIN SWITCH OT80F3 L105 KIT | 1 |
| Note: TO / BIS / JUSQU'AU 30/06/2015 | | | |
| 1 | 2104473 | MAIN SWITCH OT63F3 L105 KIT | 1 |
| Note: FROM / AB / À PARTIR DU 01/07/2015 | | | |
| 2 | 4184784 | CONTROL PANEL HMI SC KIT | 1 |
| 2 | 4185259 | ASSEMBLY DISPLAY SC PKG VP. | 1 |
| Note: DISPLAY ALONE / PLATINE SEULE | | | |
| 3 | 4185257 | ASSEMBLY CPU SCe Booster VP. | 1 |
| 5 | 2046288 | CIRCUIT BREAKER S201 B16 | 1 |
| 4 | 2051217 | AUTOM.CIRCUIT BREAKER S203 B16 TO7,5kW | 1 |
| 6 | 4194956 | PATCH CABLE RJ45 CAT6 1,0M BLUE SC-PANEL | 1 |

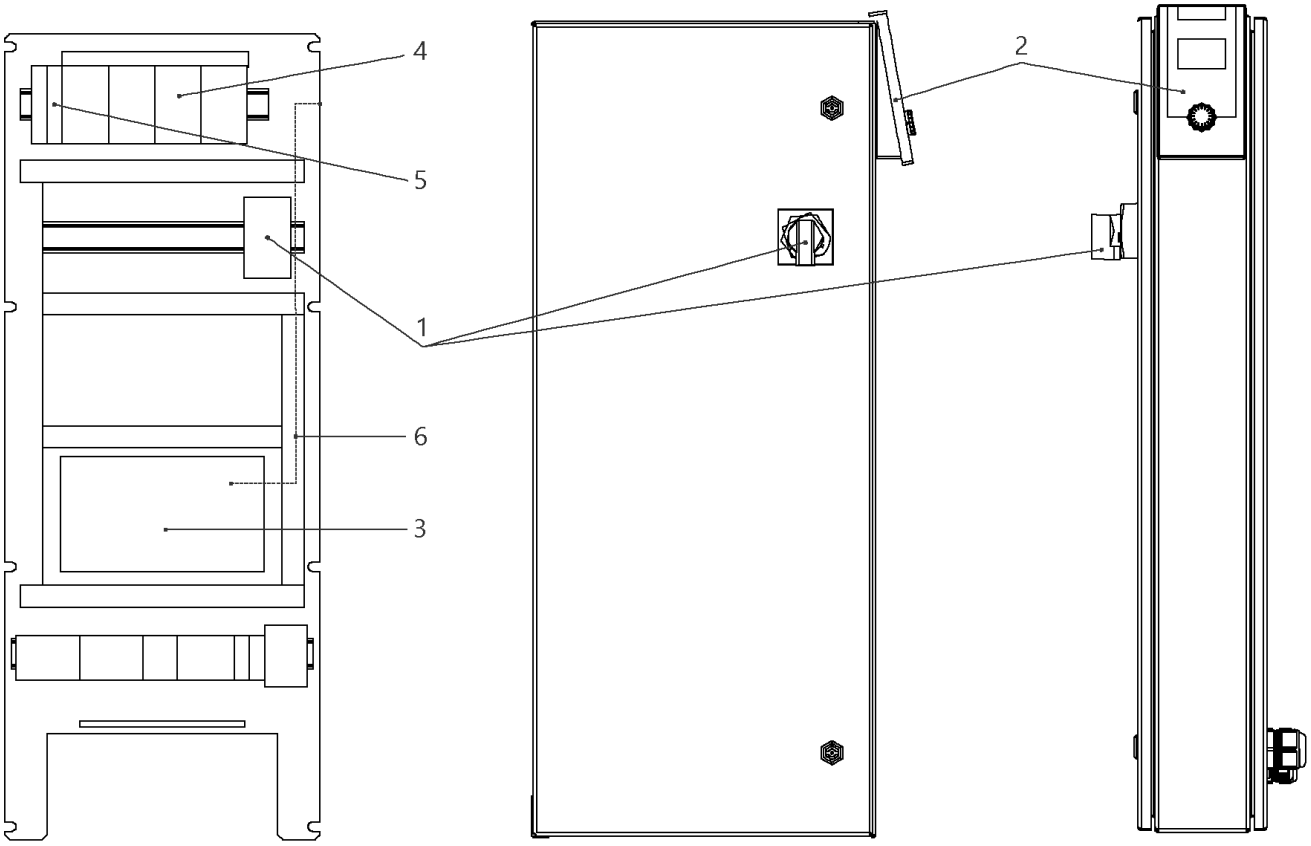
4
5
1
6
3
2

## W-CTRL-SCE-B-4x10A-T34-FM-ND2-AVC-PKG (2541903)

| Item | Article no. | Description | Quantity |
|---|---|---|---|
| 1 | 2104473 | MAIN SWITCH OT63F3 L105 KIT | 1 |
| 2 | 4184784 | CONTROL PANEL HMI SC KIT | 1 |
| 2 | 4185259 | ASSEMBLY DISPLAY SC PKG VP. | 1 |
| Note: DISPLAY ALONE / PLATINE SEULE | | | |
| 3 | 4185257 | ASSEMBLY CPU SCe Booster VP. | 1 |
| 5 | 2046288 | CIRCUIT BREAKER S201 B16 | 1 |
| 4 | 2119861 | AUTOMATIC CIRCUIT BREAKER S203 B13 3POL. | 1 |
| 6 | 4194956 | PATCH CABLE RJ45 CAT6 1,0M BLUE SC-PANEL | 1 |

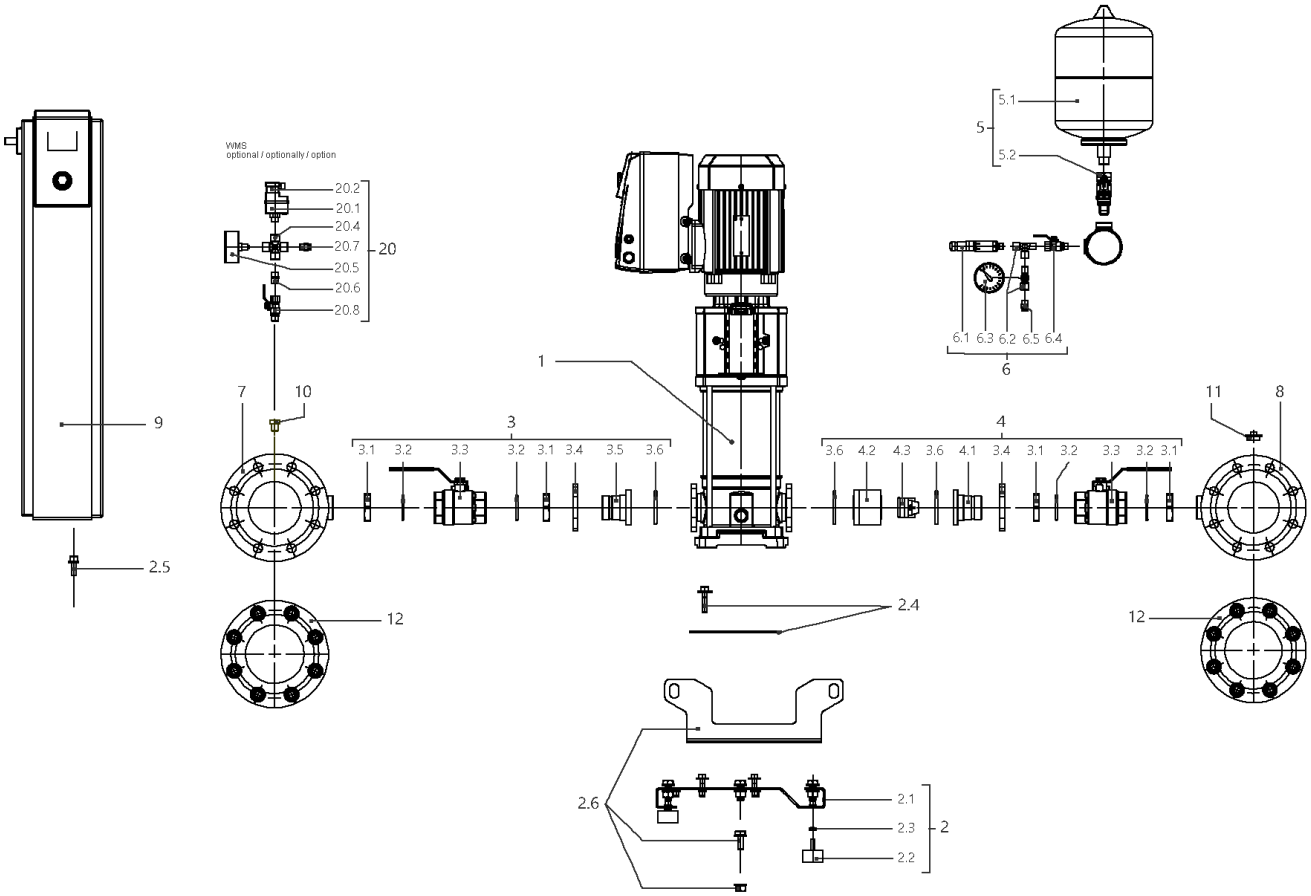
VIMS
optional / optionally / option
20.2
20.1
20.4
20.7
20.5
20.6
20.8
20
5.1
5
5.2
6.1 6.3 6.2 6.5 6.4
6
1
7
10
3
3.1 3.2 3.3 3.2 3.1 3.4 3.5 3.6
4
3.6 4.2 4.3 3.6 4.1 3.4 3.1 3.2 3.3 3.2 3.1
11
8
9
2.5
12
2.4
12
2.6
2.1
2.3
2.2
2

## SiBoost Smart 4HELIX VE1605 (2536343)

| Item | Article no. | Description | Quantity |
|---|---|---|---|
| 1 | | HELIX VE1605-1/16/E/KS/FF240/EC | 1 |
| 2 | 4197134 | BASE PLATE DE4 1450x420 KIT | 1 |
| 2.1 | | > BASEPLATE_4x4/6/10/16V_E300_BOX_150 | 1 |
| 2.2 | 2028654 | > VIBRATION DAMPER D.50X30 M10X28 | 1 |
| 2.3 | 2028281 | > NUT M10 DIN936 (ISO4035) 17H VZ | 1 |
| 2.4 | 4197083 | > HOLDER PUMP Helix 10/16 KIT | 1 |
| 2.5 | 4197084 | > HOLDER SWITCHBOX WILO Smart Control KIT | 1 |
| 2.6 | 4197117 | > LIFTING Siboost HELIX SC KIT | 1 |
| 3 | 4197072 | SUCTION SIDE Siboost Helix10/16 KIT | 1 |
| 3.1 | 2032623 | > NUT G1 1/2"SW55 MS | 1 |
| 3.2 | 2032616 | > O-RING ID.44X3,53N DIN3771 E7502 | 1 |
| 3.2 | 2534877 | > BALL TAP KDW40-H G11/2I-I-DN40 DVGW | 1 |
| 3.4 | 2032626 | > OVAL FLANGE D52-LK100 ST-VZ | 1 |
| 3.5 | 2032627 | > UNION INSERT DN40 LAPPED FLANGE | 1 |
| 3.6 | 2032628 | > O-RING ID.56,52X5,33N DIN3771 E7502 | 1 |
| 4 | 4197829 | DELIVERY SIDE Siboost Helix V16 KIT | 1 |
| 3.1 | 2032623 | > NUT G1 1/2"SW55 MS | 1 |
| 3.2 | 2032616 | > O-RING ID.44X3,53N DIN3771 E7502 | 1 |
| 3.3 | 2534877 | > BALL TAP KDW40-H G11/2I-I-DN40 DVGW | 1 |
| 3.4 | 2032626 | > OVAL FLANGE D52-LK100 ST-VZ | 1 |
| 4.1 | 2054274 | > UNION INSERT DN40 LAPPED FLANGE(W.COLLAR | 1 |
| 4.2 | 2054270 | > HOUSING RFV(RV-IN) DN50 MS VP. | 1 |
| 4.3 | 2028284 | > NON-RETURN DEVICE UNIT NV50/DN50 VP. | 1 |
| 3.6 | 2032628 | > O-RING ID.56,52X5,33N DIN3771 E7502 | 1 |
| 5 | 2032642 | DIAPHREM TANK 8L/PN16 DIN4807/T5 KIT | 1 |
| 5.1 | 2045914 | > DIAPHREM TANK 8L TYP-DD 16BAR | 1 |
| 5.2 | 2027853 | > FLOW FITTING G3/4 FOR DIAPHRAGM VES. | 1 |
| 6 | 4197076 | PRESSURE SENSOR/ GAUGE 0-16BAR KIT | 1 |
| 6.1 | 2085909 | > PRESS.SENSOR 1/4" 0-16BAR 4-20MA VP. | 1 |
| 6.2 | 4197077 | > T-PIECE 1/4" VP. | 1 |
| 6.3 | 2028692 | > PRESSURE GAUGE NG63-PN16-G1/4 | 1 |
| 6.4 | 2028291 | > BALL TAP R1/4" PN42 GIACOMINI R254DL | 1 |
| 6.5 | 2028691 | > BLOWGUN 1/4" MS 30BAR VP. | 1 |
| 7 | 4197836 | PIPE DE4 DN100-4x11/2"+2x1/4x1200 VP. | 1 |

| Item | Article no. | Description | Quantity |
|---|---|---|---|
| 8 | 4197837 | PIPE DE4 DN100-4x11/2"+2x1/4+1x3/4x1200 | 1 |
| 9 | | W-CTRL-SCE-B-4x5,5KW-T4-FM-ND2 | 1 |
| Note: TO / BIS / JUSQU'AU 18/05/2014 | | | |
| 9 | 2541907 | W-CTRL-SCE-B-4x13A-T34-FM-ND2-AVC-PKG | 1 |
| Note: FROM / AB / À PARTIR DU 19/05/2014 | | | |
| 10 | 4197079 | PLUG G1/4"x10 AISI304 KIT | 1 |
| 11 | 2032654 | PLUG R3/4" MS VIEGA 1751 | 1 |
| 12 | 4197835 | BLIND-FLANGE DN100 PN16 -1.4404 KIT | 1 |
| | 2106342 | > FLAT GASKET D.120/162X2 DN100 C4430 VP. | 1 |
| | | > NUT M16 DIN934 A2 1.4301 | 1 |
| | | > SCREW M16x70 DIN933 A2 (8 PIECES) | 1 |
| | | > WASHER A17 DIN125 A2 | 1 |
| | | > FULL FLANGE ST.DN100 PN16 EN1092-1/05 A | 1 |
| | | > FLANGE COVER DN100 DIN 3443 FORM A | 1 |
| 20 | | ASSEMBLY WMS. DE-EB. +VP | 1 |
| 20.1 | 2028652 | > PRESSURE SWITCH PS3-ASR 1/(1,3) VP. | 1 |
| 20.2 | 2130983 | > PLUG PS3-415 WITH KABEL 1,5M 2NO VP. | 1 |
| 20.4 | 2028290 | > CROSSPIECE R1/4" MS-NICKEL | 1 |
| 20.5 | 2028687 | > PRESSURE GAUGE NG63 R1/4" HI.0-6BAR | 1 |
| 20.6 | 2054268 | > DUAL NIPPLE G1/4" x G1/4" MS VP. | 1 |
| 20.7 | 2028691 | > BLOWGUN 1/4" MS 30BAR VP. | 1 |
| 20.8 | 2028291 | > BALL TAP R1/4" PN42 GIACOMINI R254DL | 1 |

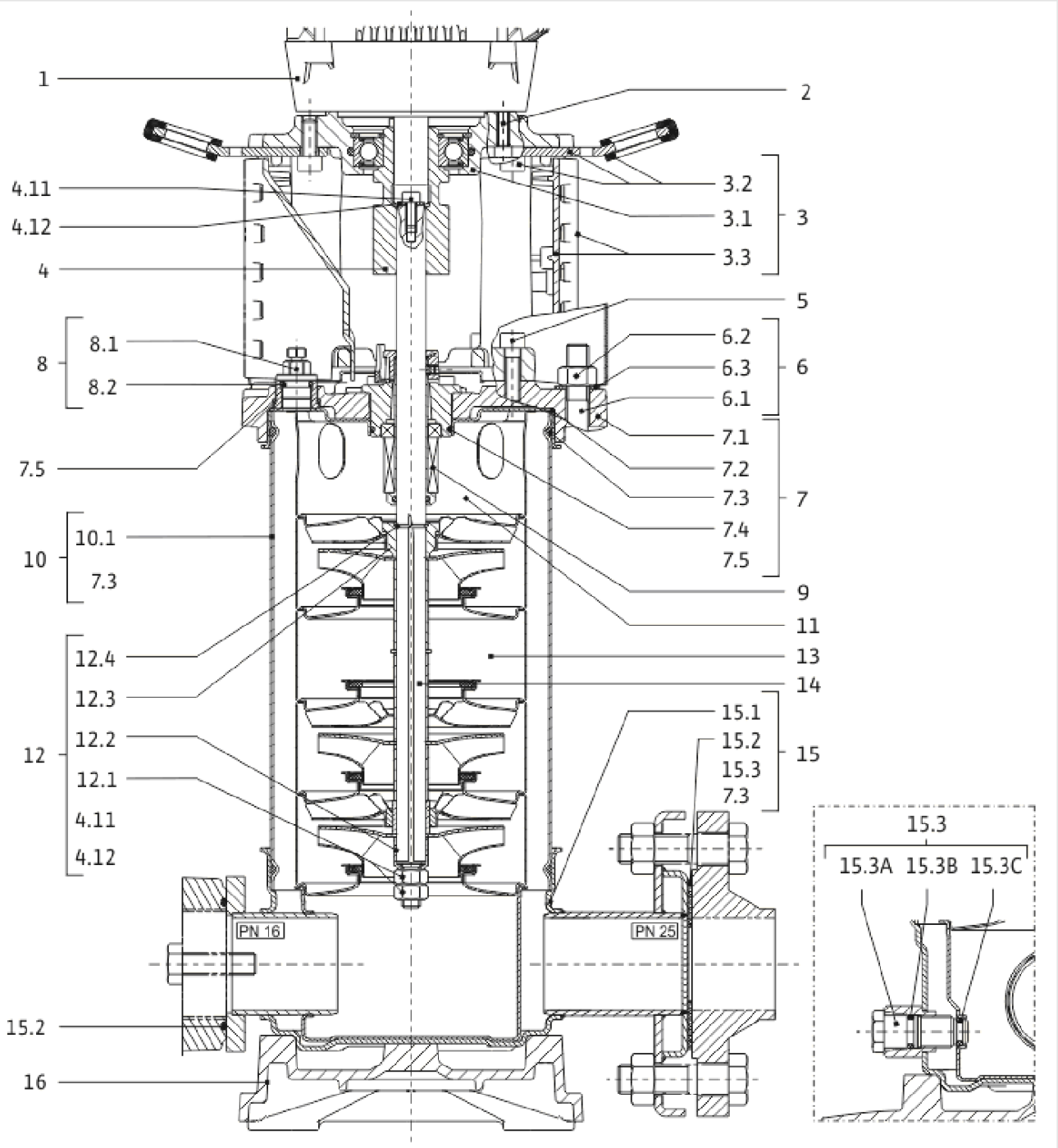
1
2
4.11
4.12
4
3.2
3.1
3.3
3
5
8
8.1
8.2
6.2
6.3
6.1
6
7.5
7.1
7.2
7.3
7.4
7.5
7
10
10.1
7.3
9
11
12
12.4
12.3
12.2
12.1
4.11
4.12
13
14
15.1
15.2
15.3
7.3
15
PN 16
PN 25
15.2
16
15.3
15.3A
15.3B
15.3C

| Item | Article no. | Description | Quantity |
|---|---|---|---|
| 1 | | DRIVE HELIX-VE1605-FF24-IE2-ATB KIT | 1 |
| Note: MOTOR BRAND ATB | | | |
| 2 | 4174093 | SCREW M12X50 (4 PIECES) | 1 |
| 3 | 4197828 | LANTERN FF240 HELIX KIT | 1 |
| 3.1 | | > LANTERN FF240 M+6" JL250 MACHINING+CATA | 1 |
| 3.2 | 4186346 | > EYELET CPL.FF240 HELIX (4 PIECES) | 1 |
| 3.3 | 4159695 | > COUPLING PROTECTOR FF HELIX KIT | 1 |
| 4 | 4159711 | COUPLING D.16XD.38 FF265 HELIX KIT | 1 |
| 5 | 4159707 | SCREW M8X30 (4 PIECES) | 1 |
| 6 | 2127554 | STUD BOLT M12X437 KIT | 1 |
| 7 | 4159685 | END SHIELD HELIX EPDM KIT | 1 |
| 7.1 | | > END SHIELD M+6" GJL250 MACHINING+CATA | 1 |
| 7.2 | 2127607 | > STATIONARY RING HOLDER 6" HELIX 1.4301 V | 1 |
| 7.3 | 4176513 | > O-RING FOR PUMP JACKET VP. | 1 |
| 7.4 | 2127603 | > O-RING ID.37,6x2,4 EPDM VP. | 1 |
| 7.5 | 2127602 | > O-RING ID.21,35x2 EPDM VP. | 1 |
| 8 | 4159686 | FILING/PURGING PLUG HELIX EPDM KIT | 1 |
| 9 | 4159696 | CARTRIDGE HELIX6-10-16 O/E KIT | 1 |
| 10 | 2127577 | HOUSING PIPE D.152x310 1.4301 KIT | 1 |
| 11 | 2127588 | CENTERING STAGE-RETURN HELIX16 1.4301 VP | 1 |
| 12 | 4159688 | SHAFT EQUIPMENT HELIX V16 BI BLOC KIT | 1 |
| 4.11 | 4102901 | > SCREW CHC-M6X14-8.8-ISO4762-GEOMET500A | 1 |
| 4.12 | 2130995 | > SERRATED LOCK WASHER D.6,2XD.14,5X28 VP. | 1 |
| 12.1 | | > NUT-H-M10-A4.70 | 1 |
| 12.2 | | > SERRATED LOCK WASHER M+16M3-316L | 1 |
| 12.3 | | > STOP COLLAR OF IMPELLER L18,8-Ø16-316L | 1 |
| 12.4 | | > STOP-RUSH-1/2-D16xd2-M+316 | 1 |
| 13 | | HYDRAULIC HELIX V 1605 1.4307 | 1 |
| 14 | 2127566 | SHAFT D.16X430 1.4301 VP. | 1 |
| 15 | 4217899 | PUMP HOUSING HELIX DN50 PN16 1.4301 KIT | 1 |
| 7.3 | 4176513 | > O-RING FOR PUMP JACKET VP. | 1 |
| 15.1 | | > BLASTING PPE HOUSING V-PN16-DN50-304 | 1 |
| 15.2 | 4217895 | > COUNTER FLANGE-G2"-PN16-GJL KIT | 1 |
| 15.3 | 4171321 | > PRIMING/DRAIN PLUG EPDM HELIX KIT | 1 |

| Item | Article no. | Description | Quantity |
|---|---|---|---|
| 16 | 2127601 | BASEPLATE HELIX V16 VP. | 1 |

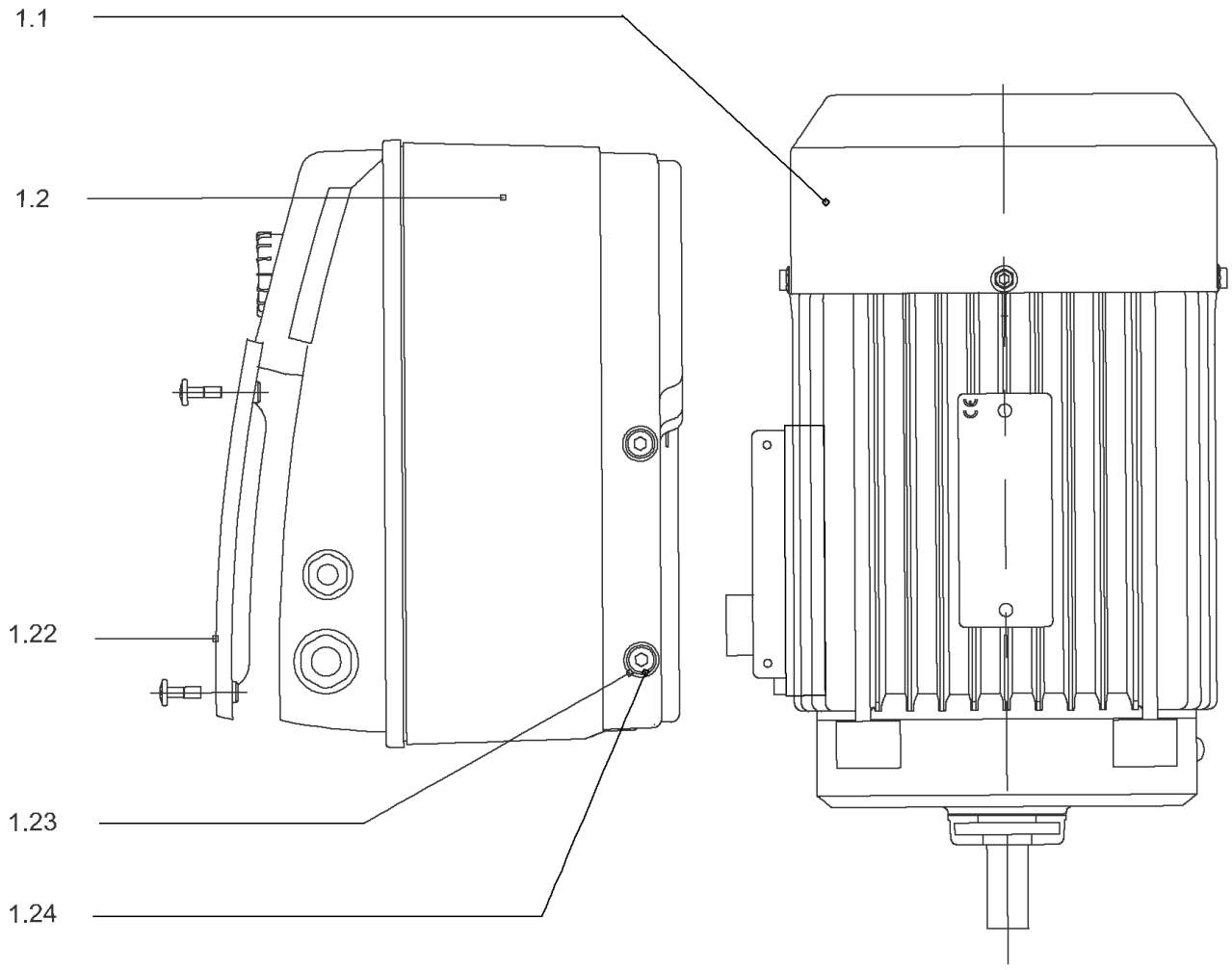
1.1
1.2
1.22
1.23
1.24

## DRIVE HELIX-VE1605-FF24-IE2-ATB KIT

| Item | Article no. | Description | Quantity |
|---|---|---|---|
| 1.1 | | MOTOR 5,5/2/132 FF240 3~380V 60HZ IE2 VP | 1 |
| Note: no longer available/nicht mehrlieferbar/n'est plus disponible | | | |
| | | SPARE PARTS MOTOR:ON REQUEST | 1 |
| 1.2 | 4184971 | MODULE HELIX-VE1605-IE2-ATB KIT | 1 |
| 1.22 | 2111344 | > MODULE COVER/GASKET TL5 KIT | 1 |
| 1.23 | 4215716 | > SCREW M5X16 DIN912 8.8 A2A (4pieces) VP. | 1 |
| 1.24 | 2057978 | > RONDELLE A5,3 DIN6797 FST ZN (4 PIECES) | 1 |

## COUPLING D.16XD.38 FF265 HELIX KIT (4159711)

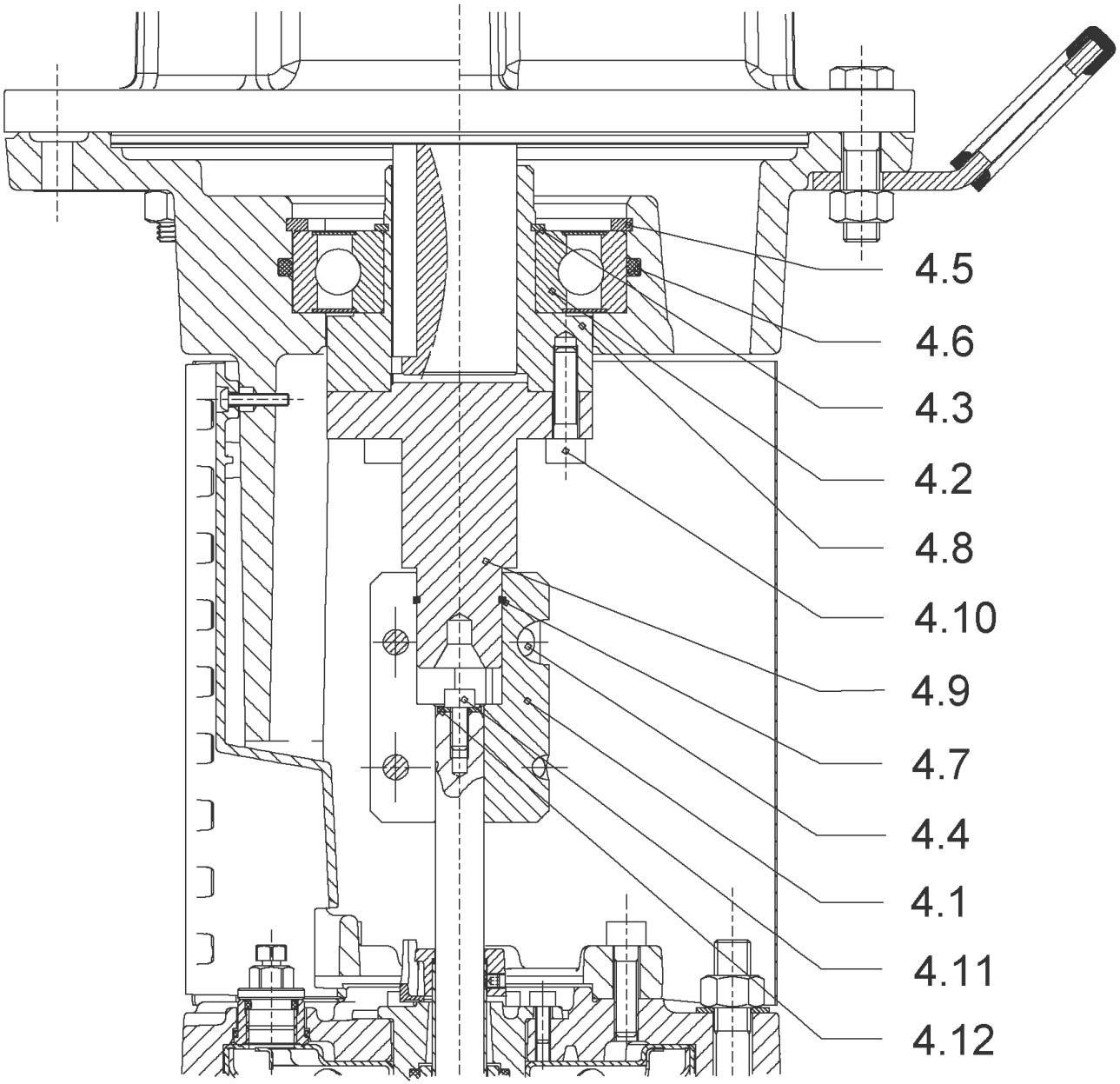

## COUPLING D.16XD.38 FF265 HELIX KIT (4159711)

| Item | Article no. | Description | Quantity |
|---|---|---|---|
| 4.1 | 2131018 | COUPLING 2 PARTS D.16XD.28XL.82,4 VP. | 1 |
| 4.2 | 2131017 | BALL BEARING 6310/ZZ-C4(HT)VP. | 1 |
| 4.3 | 4234253 | CIRCLIP-FOR-SHAFT-D50x2 VP. | 1 |
| 4.4 | 4157726 | SCREW KIT M8X30 (4 PIECES) | 1 |
| 4.5 | 4234255 | CIRCLIPS 110X4 VP. | 1 |
| 4.6 | 4233944 | O-RING ID.110 VP. | 1 |
| 4.7 | 2131019 | RETAINING RING D.26xD.2 DIN7993 VP. | 1 |
| 4.10 | 4157726 | SCREW KIT M8X30 (4 PIECES) | 1 |
| 4.11 | 4102901 | SCREW CHC-M6X14-8.8-ISO4762-GEOMET500A | 1 |
| 4.12 | 2130995 | SERRATED LOCK WASHER D.6,2XD.14,5X28 VP. | 1 |
| | | NOMEL CONTACT WASHER 8x16x1,4 STEEL ZC | 1 |
| 4.8 | 2131020 | HUB D.38XD.50 VP. | 1 |
| 4.9 | 2131021 | SPACER D.28XD.45 VP. | 1 |

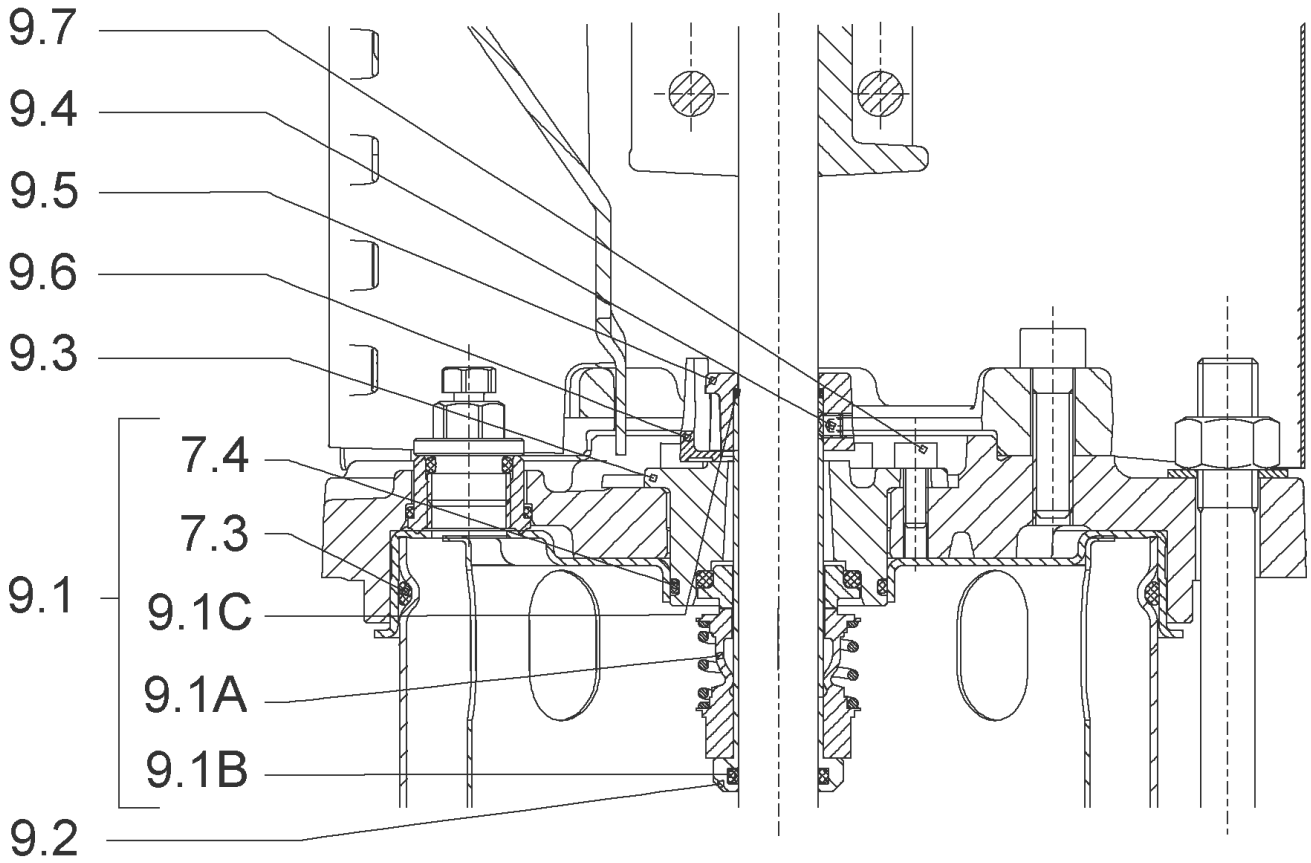
9.7
9.4
9.5
9.6
9.3
7.4
7.3
9.1
9.1C
9.1A
9.1B
9.2

## CARTRIDGE HELIX6-10-16 O/E KIT (4159696)

| Item | Article no. | Description | Quantity |
|---|---|---|---|
| 9.1 | 4159697 | SEAL-KIT-HELIX6-10-16 O/E | 1 |
| 7.3 | 4176513 | > O-RING FOR PUMP JACKET VP. | 1 |
| 7.4 | 2127603 | > O-RING ID.37,6x2,4 EPDM VP. | 1 |
| 9.1A | 2130966 | > MECH.SEAL HELIX2-4-6-10-16 O/E VP. | 1 |
| 9.1B | 2130967 | > O-RING D.16X2,5 EPDM VP. | 1 |
| 9.1C | 4176519 | > O-RING Ø16xØ1.25 VP. | 1 |
| 9.2 | 2130961 | SHAFT SLEEVE D.18/16X72,2 1.4404 VP. | 1 |
| 9.3 | 2130962 | RING HOLDER D.18 G606/G6 1.4301 VP. | 1 |
| 9.4 | 4176520 | SCREW CH M5x5 A4-70 ( 3PIECES ) | 1 |
| 9.5 | 2130963 | DRIVE RING D.29/18x12,4 MACH.VP. | 1 |
| 9.6 | 2130964 | TOOL M.S.CART.HELIX VP. | 1 |
| 9.7 | 2130965 | SCREW CHC M5X12 ISO4762 A2.70(4 PIECES) | 1 |

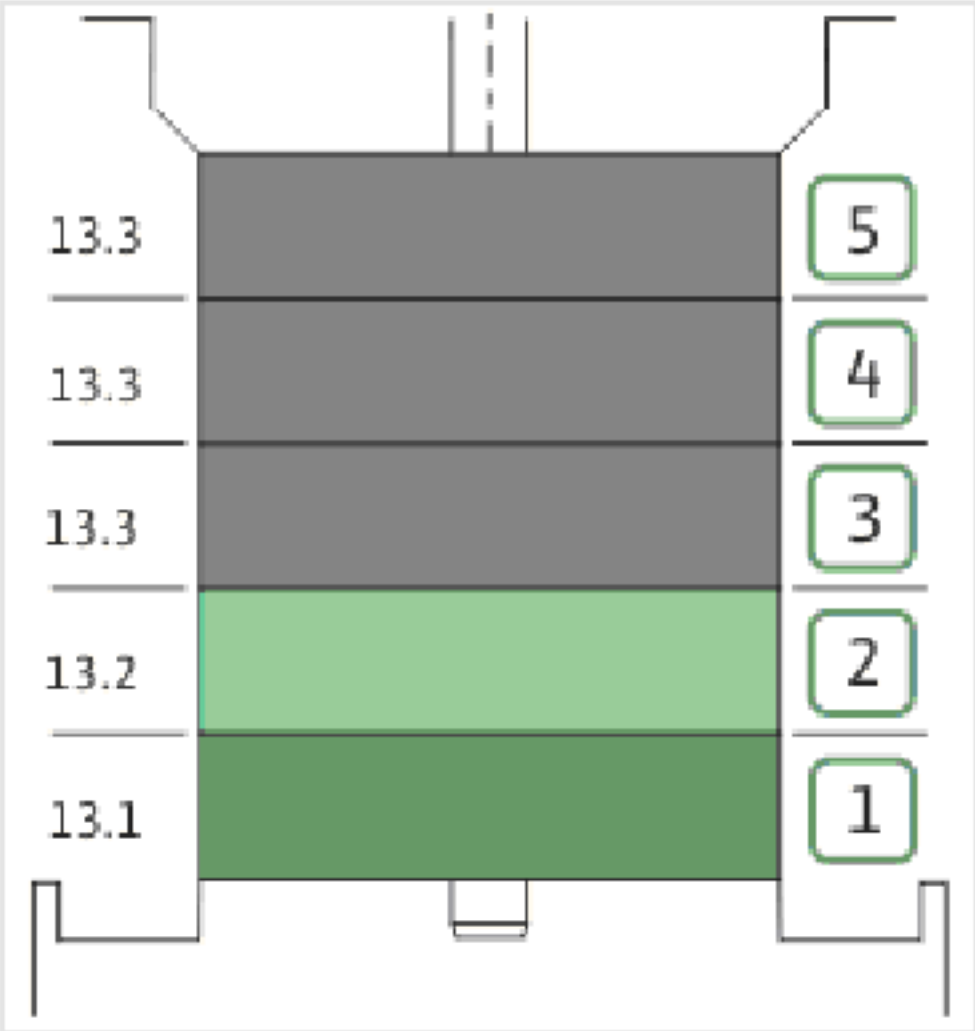
13.3
13.3
13.3
13.2
13.1
5
4
3
2
1

| Item | Article no. | Description | Quantity |
|---|---|---|---|
| 13.1 | 4159720 | STAGE HELIX 16 1.4301 KIT | 1 |
| | | > MACH.STG-CASING-WOGV-WNR-M+16-304 | 1 |
| | | > IMPELLER-M+16-304 | 1 |
| 13.2 | 4159714 | STAGE BEARING HELIX 16 1.4301 KIT | 1 |
| | | > MACH.BEARING-STG-CASING-WNR-M+16-304 | 1 |
| | | > IMPELLER-M+16-304 | 1 |
| | | > SLEEVE-SPACER-Ø19,35x30,665-304 | 1 |
| | | > SHAFT-SLEEVE-D16xD20x18-CW | 1 |
| 13.3 | 4159715 | INTERMEDIATE STAGE HELIX 16 1.4301 KIT | 1 |
| | | > CORPS-ETG-STD-ACR-AJR-USIN.M+16-304 | 1 |
| | | > IMPELLER-M+16-304 | 1 |
| | | > SPACER Ø16X19.4-L48.6-304 | 1 |

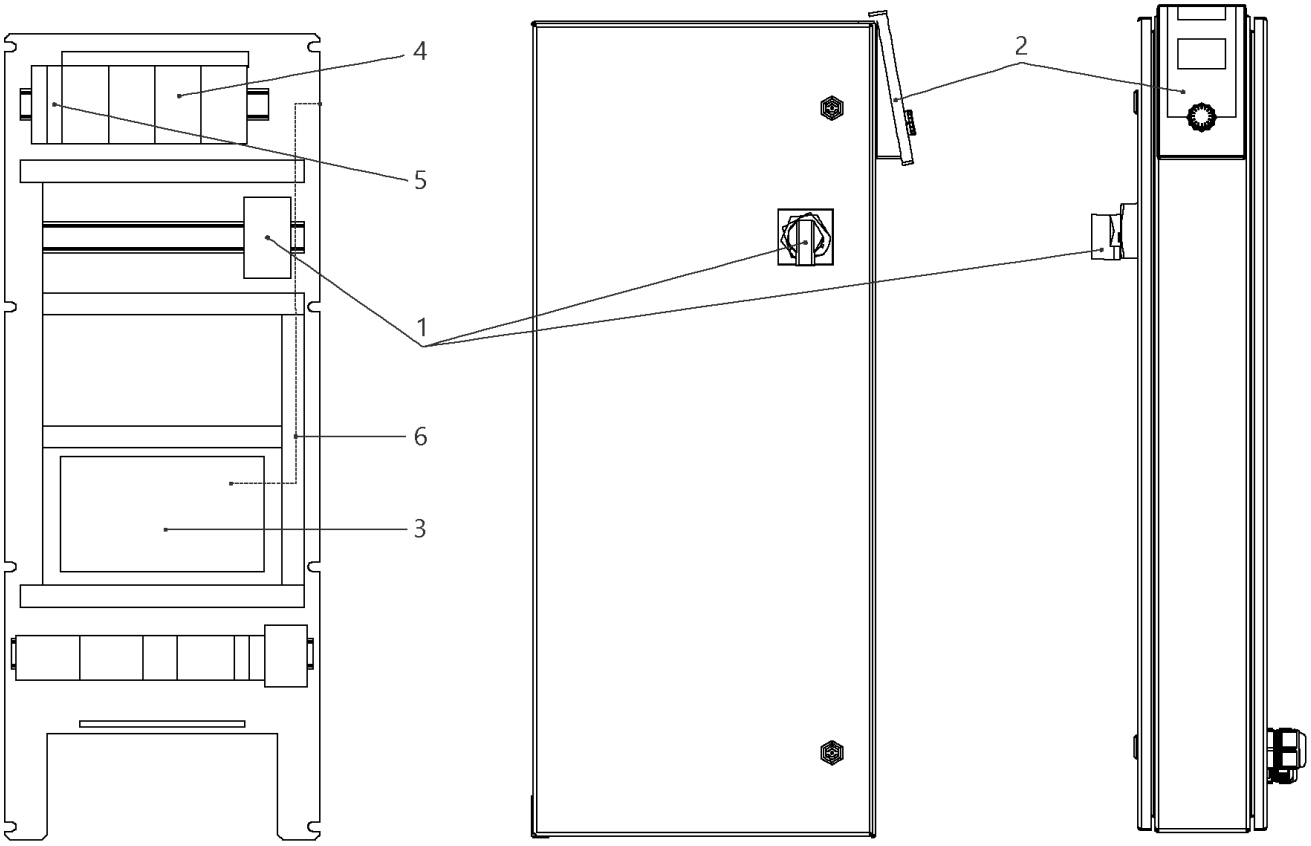
4
5
1
6
3
2

## W-CTRL-SCE-B-4x5,5KW-T4-FM-ND2

| Item | Article no. | Description | Quantity |
|---|---|---|---|
| 1 | 2104477 | MAIN SWITCH OT80F3 L105 KIT | 1 |
| 2 | 4184784 | CONTROL PANEL HMI SC KIT | 1 |
| 2 | 4185259 | ASSEMBLY DISPLAY SC PKG VP. | 1 |
| 3 | 4185257 | ASSEMBLY CPU SCe Booster VP. | 1 |
| 4 | 2051217 | AUTOM.CIRCUIT BREAKER S203 B16 TO7,5kW | 1 |
| 5 | 2046288 | CIRCUIT BREAKER S201 B16 | 1 |
| 6 | 4194956 | PATCH CABLE RJ45 CAT6 1,0M BLUE SC-PANEL | 1 |

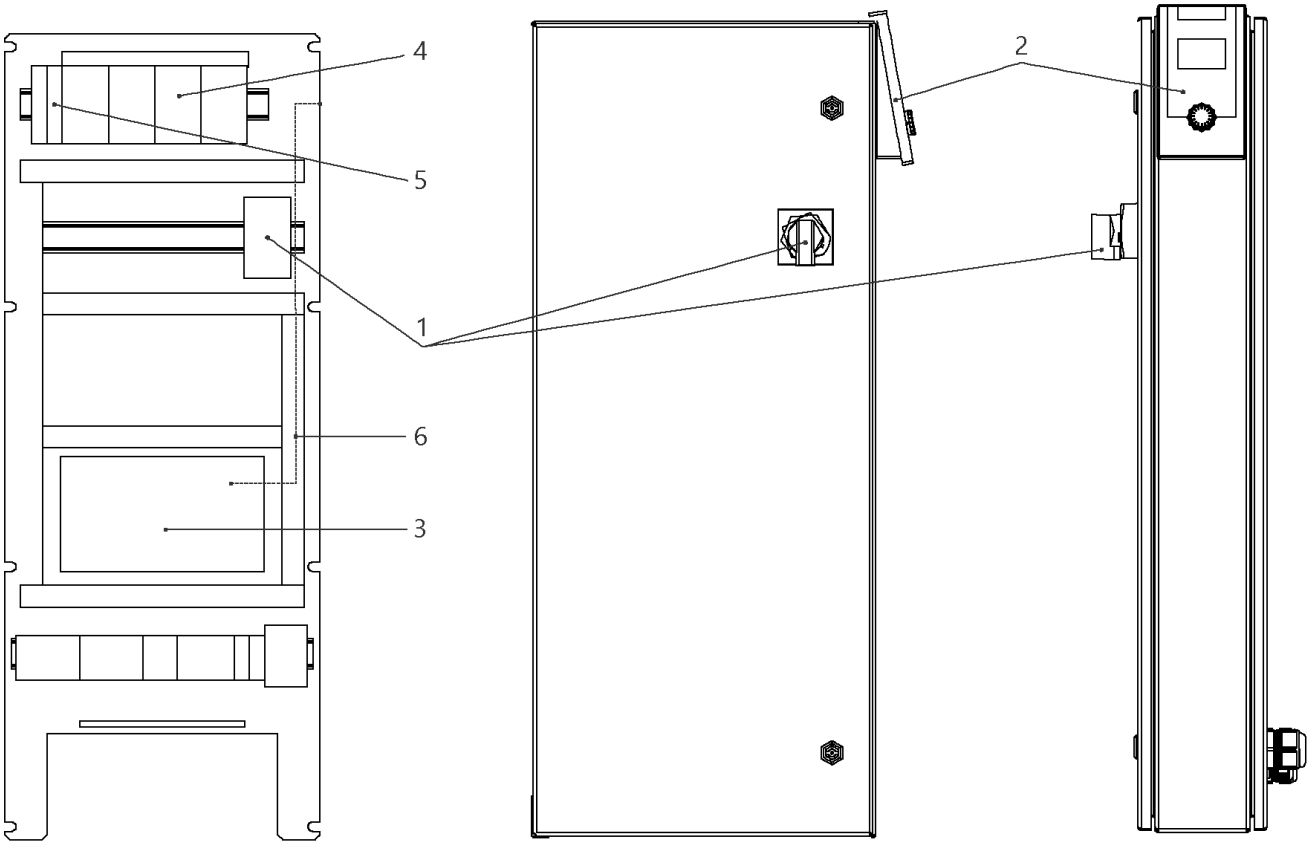
4
5
1
6
3
2

## W-CTRL-SCE-B-4x13A-T34-FM-ND2-AVC-PKG (2541907)

| Item | Article no. | Description | Quantity |
|---|---|---|---|
| 1 | 2104477 | MAIN SWITCH OT80F3 L105 KIT | 1 |
| Note: TO / BIS / JUSQU'AU 30/06/2015 | | | |
| 1 | 2104473 | MAIN SWITCH OT63F3 L105 KIT | 1 |
| Note: FROM / AB / À PARTIR DU 01/07/2015 | | | |
| 2 | 4184784 | CONTROL PANEL HMI SC KIT | 1 |
| 2 | 4185259 | ASSEMBLY DISPLAY SC PKG VP. | 1 |
| Note: DISPLAY ALONE / PLATINE SEULE | | | |
| 3 | 4185257 | ASSEMBLY CPU SCe Booster VP. | 1 |
| 5 | 2046288 | CIRCUIT BREAKER S201 B16 | 1 |
| 4 | 2051217 | AUTOM.CIRCUIT BREAKER S203 B16 TO7,5kW | 1 |
| 6 | 4194956 | PATCH CABLE RJ45 CAT6 1,0M BLUE SC-PANEL | 1 |

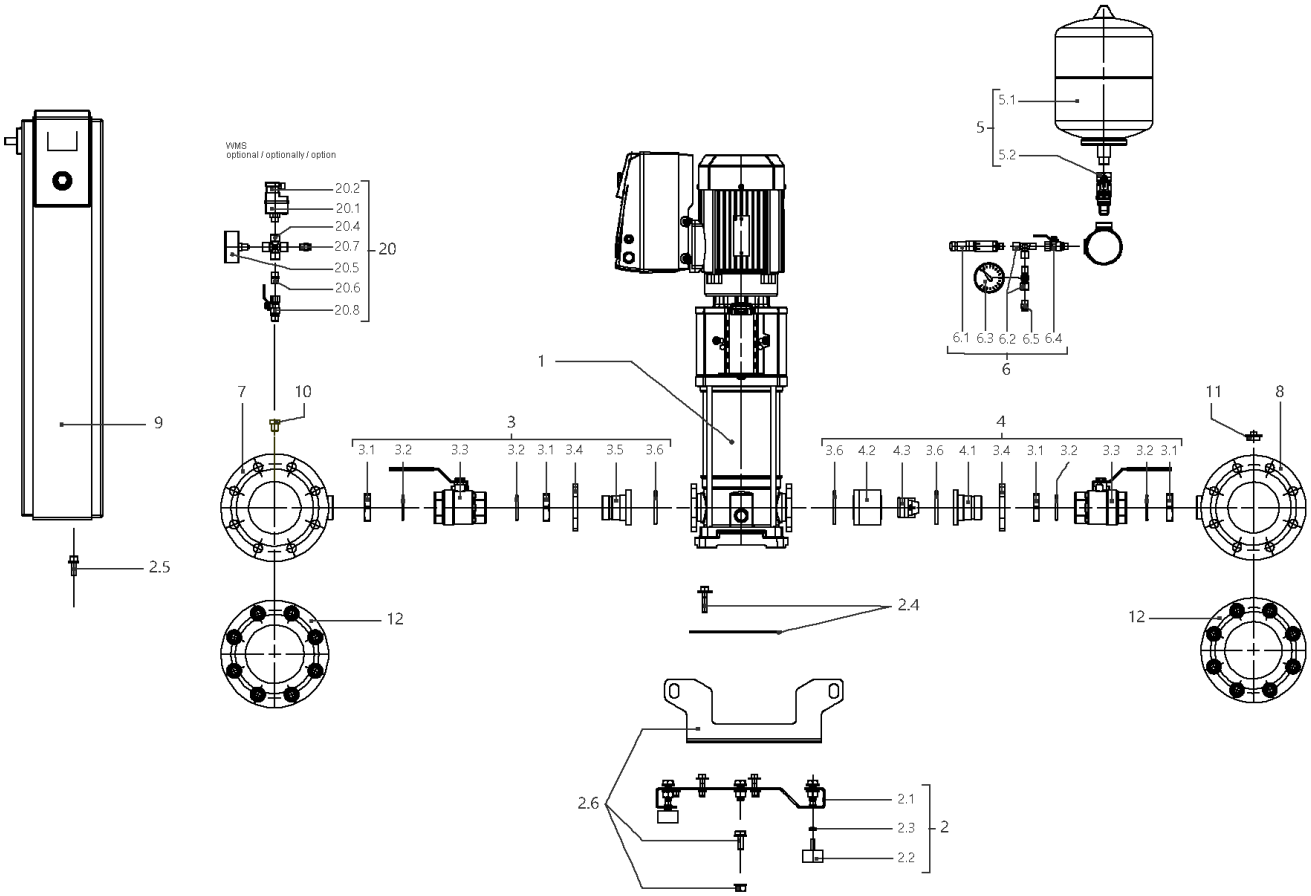
VIMS
optional / optionally / option
20.2
20.1
20.4
20.7
20.5
20.6
20.8
20
5.1
5
5.2
6.1 6.3 6.2 6.5 6.4
6
1
7
10
3
3.1 3.2 3.3 3.2 3.1 3.4 3.5 3.6
4
3.6 4.2 4.3 3.6 4.1 3.4 3.1 3.2 3.3 3.2 3.1
11
8
9
2.5
12
2.4
12
2.6
2.1
2.3
2.2
2

## SiBoost Smart 4HELIX VE1606 (2536344)

| Item | Article no. | Description | Quantity |
|---|---|---|---|
| 1 | | HELIX VE1606-1/16/E/KS/FF240/EC | 1 |
| 2 | 4197134 | BASE PLATE DE4 1450x420 KIT | 1 |
| 2.1 | | > BASEPLATE_4x4/6/10/16V_E300_BOX_150 | 1 |
| 2.2 | 2028654 | > VIBRATION DAMPER D.50X30 M10X28 | 1 |
| 2.3 | 2028281 | > NUT M10 DIN936 (ISO4035) 17H VZ | 1 |
| 2.4 | 4197083 | > HOLDER PUMP Helix 10/16 KIT | 1 |
| 2.5 | 4197084 | > HOLDER SWITCHBOX WILO Smart Control KIT | 1 |
| 2.6 | 4197117 | > LIFTING Siboost HELIX SC KIT | 1 |
| 3 | 4197072 | SUCTION SIDE Siboost Helix10/16 KIT | 1 |
| 3.1 | 2032623 | > NUT G1 1/2"SW55 MS | 1 |
| 3.2 | 2032616 | > O-RING ID.44X3,53N DIN3771 E7502 | 1 |
| 3.2 | 2534877 | > BALL TAP KDW40-H G11/2I-I-DN40 DVGW | 1 |
| 3.4 | 2032626 | > OVAL FLANGE D52-LK100 ST-VZ | 1 |
| 3.5 | 2032627 | > UNION INSERT DN40 LAPPED FLANGE | 1 |
| 3.6 | 2032628 | > O-RING ID.56,52X5,33N DIN3771 E7502 | 1 |
| 4 | 4197829 | DELIVERY SIDE Siboost Helix V16 KIT | 1 |
| 3.1 | 2032623 | > NUT G1 1/2"SW55 MS | 1 |
| 3.2 | 2032616 | > O-RING ID.44X3,53N DIN3771 E7502 | 1 |
| 3.3 | 2534877 | > BALL TAP KDW40-H G11/2I-I-DN40 DVGW | 1 |
| 3.4 | 2032626 | > OVAL FLANGE D52-LK100 ST-VZ | 1 |
| 4.1 | 2054274 | > UNION INSERT DN40 LAPPED FLANGE(W.COLLAR | 1 |
| 4.2 | 2054270 | > HOUSING RFV(RV-IN) DN50 MS VP. | 1 |
| 4.3 | 2028284 | > NON-RETURN DEVICE UNIT NV50/DN50 VP. | 1 |
| 3.6 | 2032628 | > O-RING ID.56,52X5,33N DIN3771 E7502 | 1 |
| 5 | 2032642 | DIAPHREM TANK 8L/PN16 DIN4807/T5 KIT | 1 |
| 5.1 | 2045914 | > DIAPHREM TANK 8L TYP-DD 16BAR | 1 |
| 5.2 | 2027853 | > FLOW FITTING G3/4 FOR DIAPHRAGM VES. | 1 |
| 6 | 4197076 | PRESSURE SENSOR/ GAUGE 0-16BAR KIT | 1 |
| 6.1 | 2085909 | > PRESS.SENSOR 1/4" 0-16BAR 4-20MA VP. | 1 |
| 6.2 | 4197077 | > T-PIECE 1/4" VP. | 1 |
| 6.3 | 2028692 | > PRESSURE GAUGE NG63-PN16-G1/4 | 1 |
| 6.4 | 2028291 | > BALL TAP R1/4" PN42 GIACOMINI R254DL | 1 |
| 6.5 | 2028691 | > BLOWGUN 1/4" MS 30BAR VP. | 1 |
| 7 | 4197836 | PIPE DE4 DN100-4x11/2"+2x1/4x1200 VP. | 1 |

| Item | Article no. | Description | Quantity |
|---|---|---|---|
| 8 | 4197837 | PIPE DE4 DN100-4x11/2"+2x1/4+1x3/4x1200 | 1 |
| 9 | | W-CTRL-SCE-B-4x7,5KW-T4-FM-ND2 | 1 |
| Note: TO / BIS / JUSQU'AU 18/05/2014 | | | |
| 9 | 2542077 | W-CTRL-SCE-B-4x16A-T34-FM-ND2-AVC-PKG | 1 |
| Note: FROM / AB / À PARTIR DU 19/05/2014 | | | |
| 10 | 4197079 | PLUG G1/4"x10 AISI304 KIT | 1 |
| 11 | 2032654 | PLUG R3/4" MS VIEGA 1751 | 1 |
| 12 | 4197835 | BLIND-FLANGE DN100 PN16 -1.4404 KIT | 1 |
| | 2106342 | > FLAT GASKET D.120/162X2 DN100 C4430 VP. | 1 |
| | | > NUT M16 DIN934 A2 1.4301 | 1 |
| | | > SCREW M16x70 DIN933 A2 (8 PIECES) | 1 |
| | | > WASHER A17 DIN125 A2 | 1 |
| | | > FULL FLANGE ST.DN100 PN16 EN1092-1/05 A | 1 |
| | | > FLANGE COVER DN100 DIN 3443 FORM A | 1 |
| 20 | | ASSEMBLY WMS. DE-EB. +VP | 1 |
| 20.1 | 2028652 | > PRESSURE SWITCH PS3-ASR 1/(1,3) VP. | 1 |
| 20.2 | 2130983 | > PLUG PS3-415 WITH KABEL 1,5M 2NO VP. | 1 |
| 20.4 | 2028290 | > CROSSPIECE R1/4" MS-NICKEL | 1 |
| 20.5 | 2028687 | > PRESSURE GAUGE NG63 R1/4" HI.0-6BAR | 1 |
| 20.6 | 2054268 | > DUAL NIPPLE G1/4" x G1/4" MS VP. | 1 |
| 20.7 | 2028691 | > BLOWGUN 1/4" MS 30BAR VP. | 1 |
| 20.8 | 2028291 | > BALL TAP R1/4" PN42 GIACOMINI R254DL | 1 |

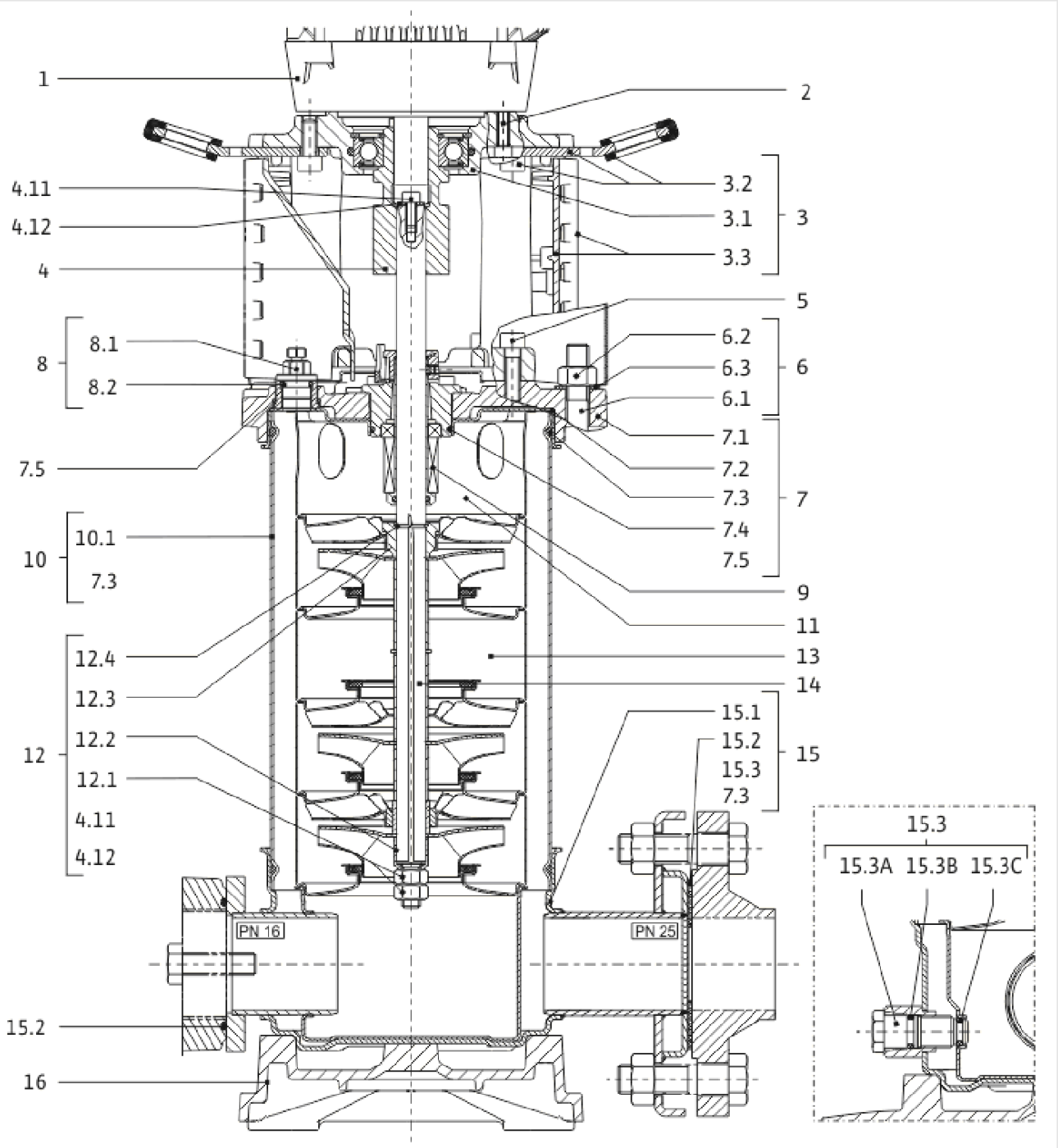
1
2
4.11
4.12
4
3.2
3.1
3.3
3
5
8
8.1
8.2
6.2
6.3
6.1
6
7.5
7.1
7.2
7.3
7.4
7.5
7
10
10.1
7.3
9
11
12
12.4
12.3
12.2
12.1
4.11
4.12
13
14
15.1
15.2
15.3
7.3
15
PN 16
PN 25
15.2
16
15.3
15.3A
15.3B
15.3C

| Item | Article no. | Description | Quantity |
|---|---|---|---|
| 1 | | DRIVE HELIX-VE1606-FF24-IE2-ATB KIT | 1 |
| Note: MOTOR BRAND SIEMENS | | | |
| 2 | 4174093 | SCREW M12X50 (4 PIECES) | 1 |
| 3 | 4197828 | LANTERN FF240 HELIX KIT | 1 |
| 3.1 | | > LANTERN FF240 M+6" JL250 MACHINING+CATA | 1 |
| 3.2 | 4186346 | > EYELET CPL.FF240 HELIX (4 PIECES) | 1 |
| 3.3 | 4159695 | > COUPLING PROTECTOR FF HELIX KIT | 1 |
| 4 | 4159711 | COUPLING D.16XD.38 FF265 HELIX KIT | 1 |
| 5 | 4159707 | SCREW M8X30 (4 PIECES) | 1 |
| 6 | 2127555 | STUD BOLT M12X485 KIT | 1 |
| 7 | 4159685 | END SHIELD HELIX EPDM KIT | 1 |
| 7.1 | | > END SHIELD M+6" GJL250 MACHINING+CATA | 1 |
| 7.2 | 2127607 | > STATIONARY RING HOLDER 6" HELIX 1.4301 V | 1 |
| 7.3 | 4176513 | > O-RING FOR PUMP JACKET VP. | 1 |
| 7.4 | 2127603 | > O-RING ID.37,6x2,4 EPDM VP. | 1 |
| 7.5 | 2127602 | > O-RING ID.21,35x2 EPDM VP. | 1 |
| 8 | 4159686 | FILING/PURGING PLUG HELIX EPDM KIT | 1 |
| 9 | 4159696 | CARTRIDGE HELIX6-10-16 O/E KIT | 1 |
| 10 | 2127578 | HOUSING PIPE D.152x360 1.4307 KIT | 1 |
| 7.3 | 4176513 | > O-RING FOR PUMP JACKET VP. | 1 |
| 10.1 | | > HOUSING-PIPE Ø152-M+1008/1606-304 | 1 |
| 11 | 2127588 | CENTERING STAGE-RETURN HELIX16 1.4301 VP | 1 |
| 12 | 4159688 | SHAFT EQUIPMENT HELIX V16 BI BLOC KIT | 1 |
| 4.11 | 4102901 | > SCREW CHC-M6X14-8.8-ISO4762-GEOMET500A | 1 |
| 4.12 | 2130995 | > SERRATED LOCK WASHER D.6,2XD.14,5X28 VP. | 1 |
| 12.1 | | > NUT-H-M10-A4.70 | 1 |
| 12.2 | | > SERRATED LOCK WASHER M+16M3-316L | 1 |
| 12.3 | | > STOP COLLAR OF IMPELLER L18,8-Ø16-316L | 1 |
| 12.4 | | > STOP-RUSH-1/2-D16xd2-M+316 | 1 |
| 13 | | HYDRAULIC HELIX V 1606 1.4307 | 1 |
| 14 | 4177829 | SHAFT Ø16 X480 1.4301 VP. | 1 |
| 15 | 4217899 | PUMP HOUSING HELIX DN50 PN16 1.4301 KIT | 1 |
| 7.3 | 4176513 | > O-RING FOR PUMP JACKET VP. | 1 |
| 15.1 | | > BLASTING PPE HOUSING V-PN16-DN50-304 | 1 |

| Item | Article no. | Description | Quantity |
|---|---|---|---|
| 15.2 | 4217895 | > COUNTER FLANGE-G2"-PN16-GJL KIT | 1 |
| 15.3 | 4171321 | > PRIMING/DRAIN PLUG EPDM HELIX KIT | 1 |
| 16 | 2127601 | BASEPLATE HELIX V16 VP. | 1 |

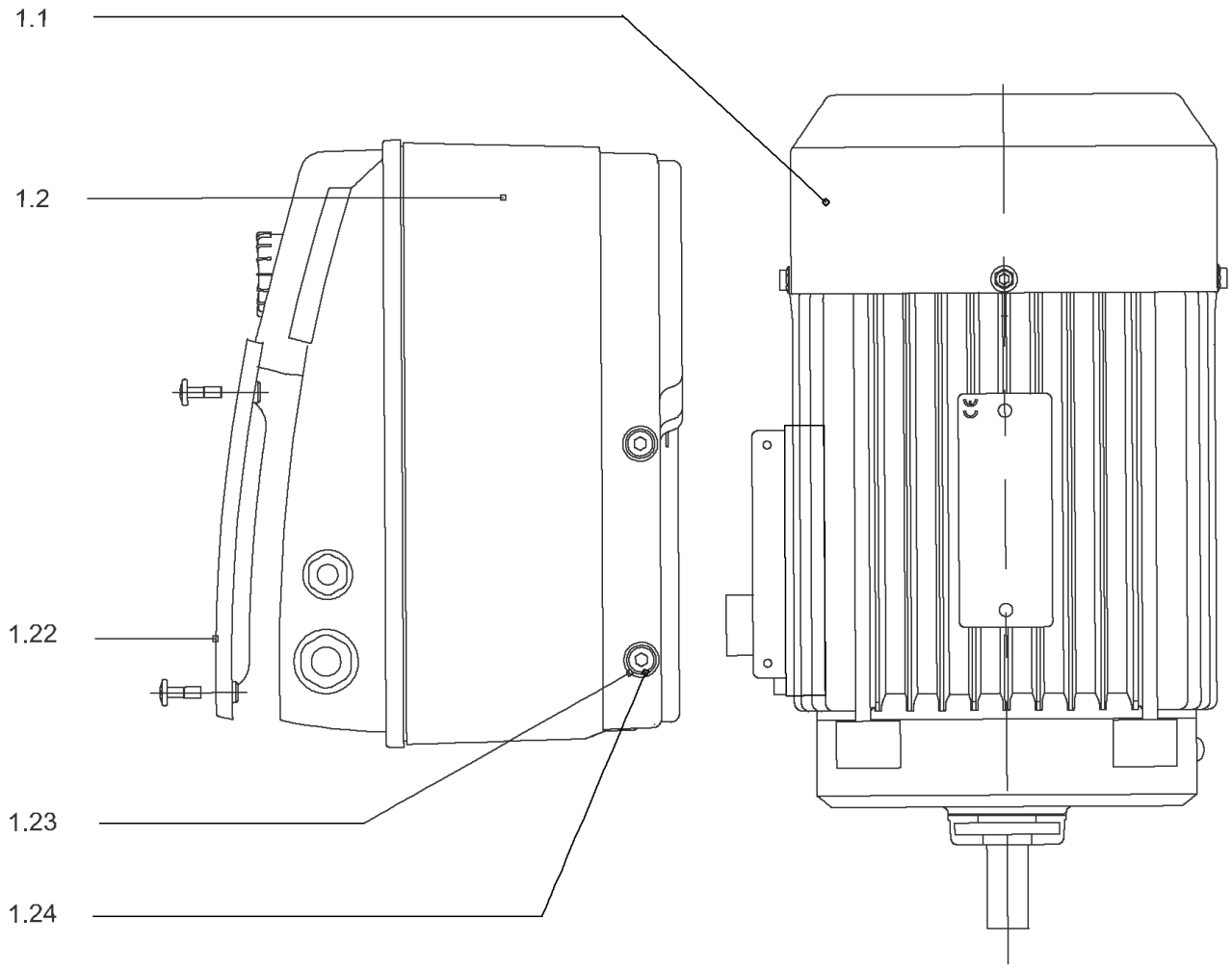
1.1
1.2
1.22
1.23
1.24

## DRIVE HELIX-VE1606-FF24-IE2-ATB KIT

| Item | Article no. | Description | Quantity |
|---|---|---|---|
| 1.1 | | MOTOR 7,5/2/132 FF240 3~380V 60HZ IE2 VP | 1 |
| Note: no longer available/nicht mehrlieferbar/n'est plus disponible | | | |
| | | SPARE PARTS MOTOR:ON REQUEST | 1 |
| 1.2 | 4193492 | MODULE HELIX-VE1606-IE2-ATB KIT | 1 |
| 1.22 | 2111344 | > MODULE COVER/GASKET TL5 KIT | 1 |
| 1.23 | 4215716 | > SCREW M5X16 DIN912 8.8 A2A (4pieces) VP. | 1 |
| 1.24 | 2057978 | > RONDELLE A5,3 DIN6797 FST ZN (4 PIECES) | 1 |

## COUPLING D.16XD.38 FF265 HELIX KIT (4159711)

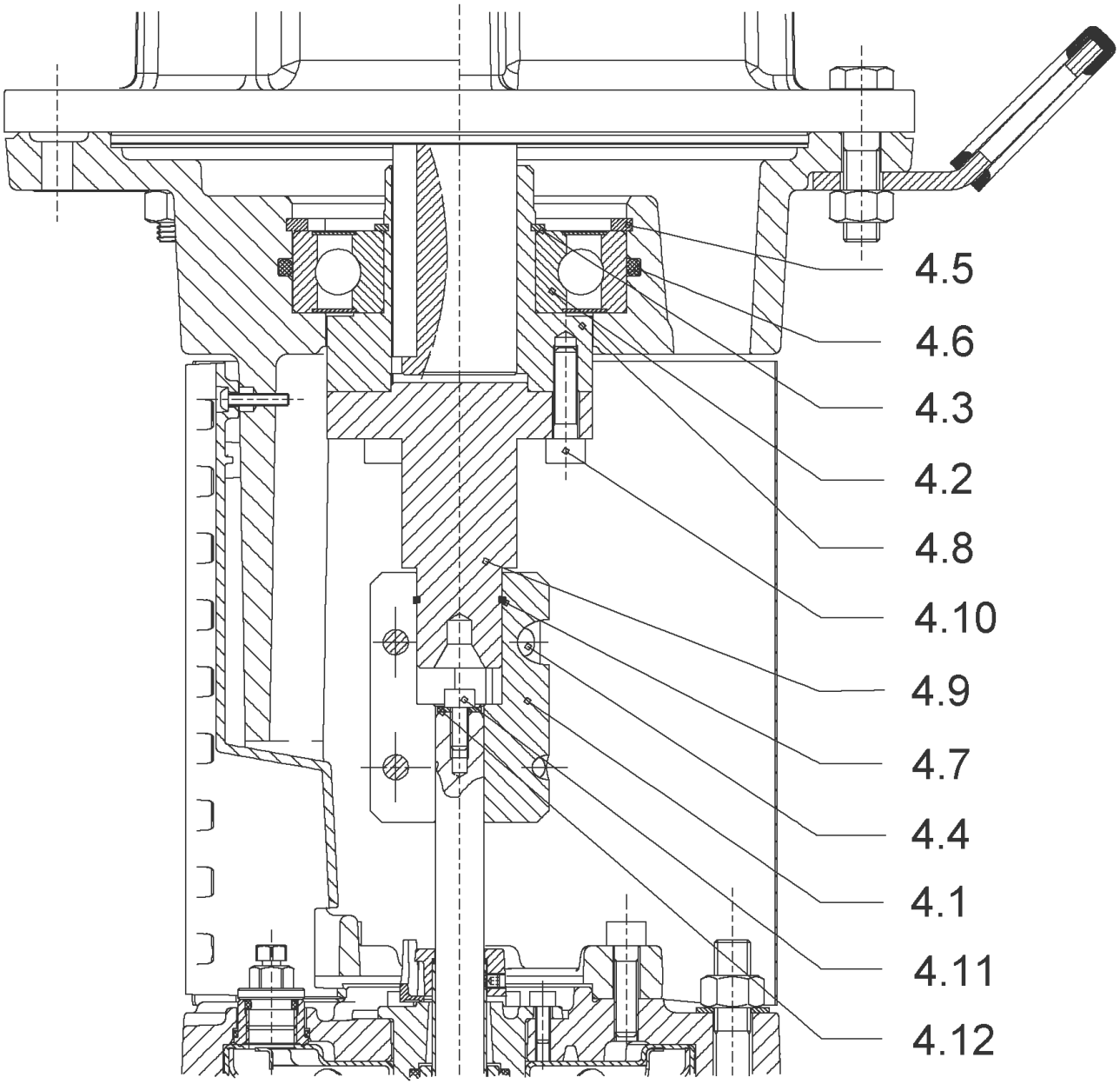

## COUPLING D.16XD.38 FF265 HELIX KIT (4159711)

| Item | Article no. | Description | Quantity |
|---|---|---|---|
| 4.1 | 2131018 | COUPLING 2 PARTS D.16XD.28XL.82,4 VP. | 1 |
| 4.2 | 2131017 | BALL BEARING 6310/ZZ-C4(HT)VP. | 1 |
| 4.3 | 4234253 | CIRCLIP-FOR-SHAFT-D50x2 VP. | 1 |
| 4.4 | 4157726 | SCREW KIT M8X30 (4 PIECES) | 1 |
| 4.5 | 4234255 | CIRCLIPS 110X4 VP. | 1 |
| 4.6 | 4233944 | O-RING ID.110 VP. | 1 |
| 4.7 | 2131019 | RETAINING RING D.26xD.2 DIN7993 VP. | 1 |
| 4.10 | 4157726 | SCREW KIT M8X30 (4 PIECES) | 1 |
| 4.11 | 4102901 | SCREW CHC-M6X14-8.8-ISO4762-GEOMET500A | 1 |
| 4.12 | 2130995 | SERRATED LOCK WASHER D.6,2XD.14,5X28 VP. | 1 |
| | | NOMEL CONTACT WASHER 8x16x1,4 STEEL ZC | 1 |
| 4.8 | 2131020 | HUB D.38XD.50 VP. | 1 |
| 4.9 | 2131021 | SPACER D.28XD.45 VP. | 1 |

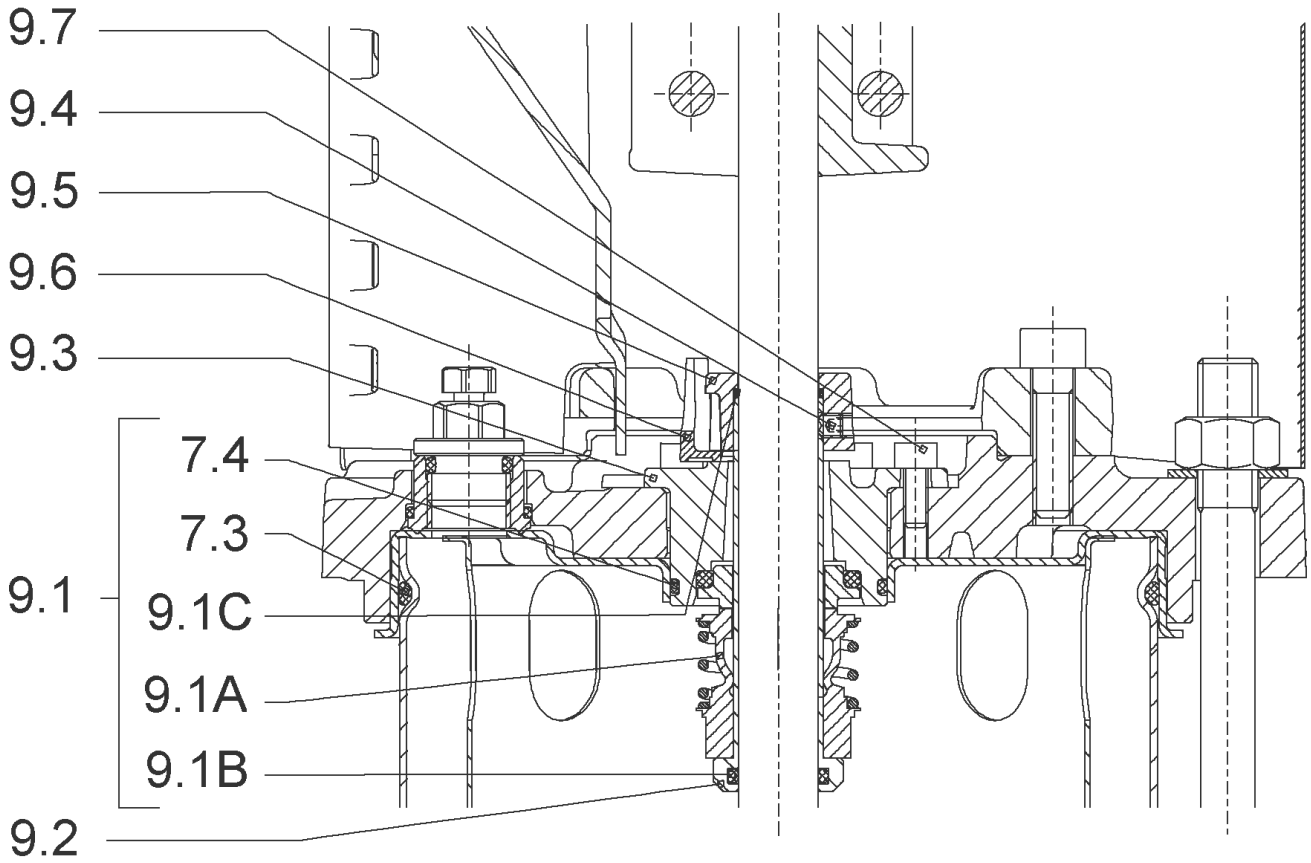
9.7
9.4
9.5
9.6
9.3
7.4
7.3
9.1
9.1C
9.1A
9.1B
9.2

## CARTRIDGE HELIX6-10-16 O/E KIT (4159696)

| Item | Article no. | Description | Quantity |
|---|---|---|---|
| 9.1 | 4159697 | SEAL-KIT-HELIX6-10-16 O/E | 1 |
| 7.3 | 4176513 | > O-RING FOR PUMP JACKET VP. | 1 |
| 7.4 | 2127603 | > O-RING ID.37,6x2,4 EPDM VP. | 1 |
| 9.1A | 2130966 | > MECH.SEAL HELIX2-4-6-10-16 O/E VP. | 1 |
| 9.1B | 2130967 | > O-RING D.16X2,5 EPDM VP. | 1 |
| 9.1C | 4176519 | > O-RING Ø16xØ1.25 VP. | 1 |
| 9.2 | 2130961 | SHAFT SLEEVE D.18/16X72,2 1.4404 VP. | 1 |
| 9.3 | 2130962 | RING HOLDER D.18 G606/G6 1.4301 VP. | 1 |
| 9.4 | 4176520 | SCREW CH M5x5 A4-70 ( 3PIECES ) | 1 |
| 9.5 | 2130963 | DRIVE RING D.29/18x12,4 MACH.VP. | 1 |
| 9.6 | 2130964 | TOOL M.S.CART.HELIX VP. | 1 |
| 9.7 | 2130965 | SCREW CHC M5X12 ISO4762 A2.70(4 PIECES) | 1 |

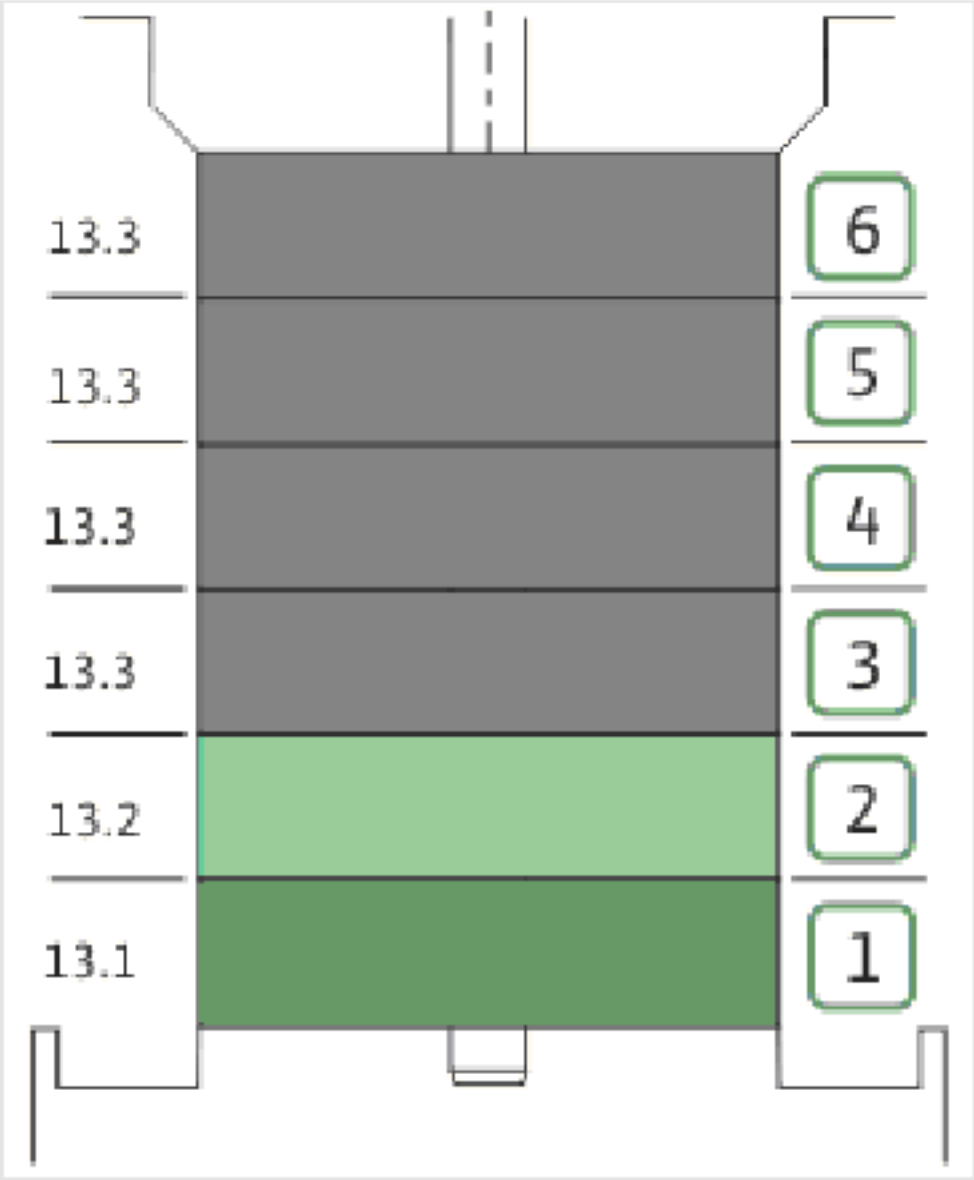
13.3
13.3
13.3
13.3
13.2
13.1
6
5
4
3
2
1

## HYDRAULIC HELIX V 1606 1.4307

| Item | Article no. | Description | Quantity |
|---|---|---|---|
| 13.1 | 4159720 | STAGE HELIX 16 1.4301 KIT | 1 |
| | | > MACH.STG-CASING-WOGV-WNR-M+16-304 | 1 |
| | | > IMPELLER-M+16-304 | 1 |
| 13.2 | 4159714 | STAGE BEARING HELIX 16 1.4301 KIT | 1 |
| | | > MACH.BEARING-STG-CASING-WNR-M+16-304 | 1 |
| | | > IMPELLER-M+16-304 | 1 |
| | | > SLEEVE-SPACER-Ø19,35x30,665-304 | 1 |
| | | > SHAFT-SLEEVE-D16xD20x18-CW | 1 |
| 13.3 | 4159715 | INTERMEDIATE STAGE HELIX 16 1.4301 KIT | 1 |
| | | > CORPS-ETG-STD-ACR-AJR-USIN.M+16-304 | 1 |
| | | > IMPELLER-M+16-304 | 1 |
| | | > SPACER Ø16X19.4-L48.6-304 | 1 |

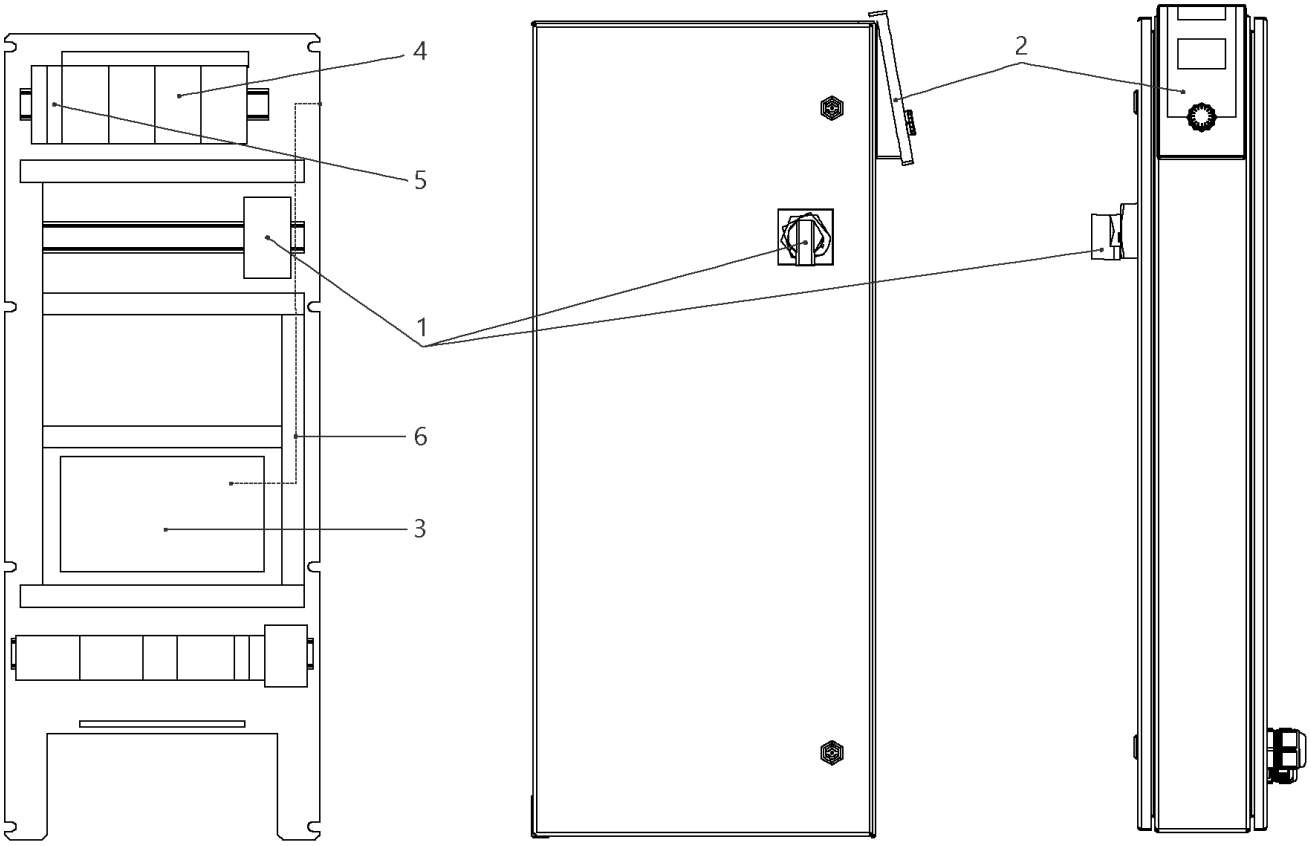
4
5
1
6
3
2

## W-CTRL-SCE-B-4x7,5KW-T4-FM-ND2

| Item | Article no. | Description | Quantity |
|---|---|---|---|
| 1 | 2104477 | MAIN SWITCH OT80F3 L105 KIT | 1 |
| 2 | 4184784 | CONTROL PANEL HMI SC KIT | 1 |
| 2 | 4185259 | ASSEMBLY DISPLAY SC PKG VP. | 1 |
| 3 | 4185257 | ASSEMBLY CPU SCe Booster VP. | 1 |
| 4 | 2051217 | AUTOM.CIRCUIT BREAKER S203 B16 TO7,5kW | 1 |
| 5 | 2046288 | CIRCUIT BREAKER S201 B16 | 1 |
| 6 | 4194956 | PATCH CABLE RJ45 CAT6 1,0M BLUE SC-PANEL | 1 |

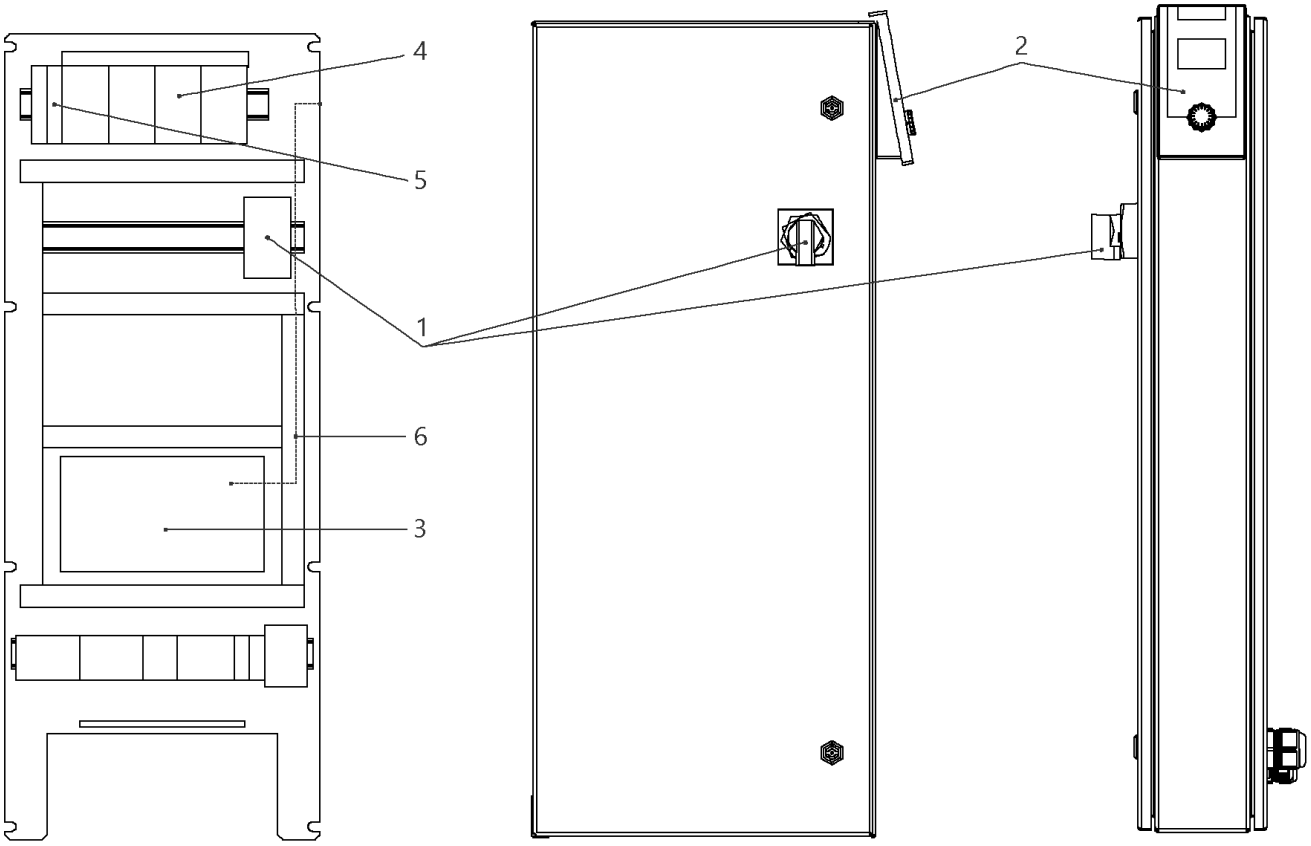
4
5
1
6
3
2

## W-CTRL-SCE-B-4x16A-T34-FM-ND2-AVC-PKG (2542077)

| Item | Article no. | Description | Quantity |
|---|---|---|---|
| 1 | 2104477 | MAIN SWITCH OT80F3 L105 KIT | 1 |
| 2 | 4184784 | CONTROL PANEL HMI SC KIT | 1 |
| 2 | 4185259 | ASSEMBLY DISPLAY SC PKG VP. | 1 |
| Note: DISPLAY ALONE / PLATINE SEULE | | | |
| 3 | 4185257 | ASSEMBLY CPU SCe Booster VP. | 1 |
| 4 | 4197832 | AUTOMATIC CIRCUIT BREAKER S203 B20 VP. | 1 |
| 5 | 2046288 | CIRCUIT BREAKER S201 B16 | 1 |
| 6 | 4194956 | PATCH CABLE RJ45 CAT6 1,0M BLUE SC-PANEL | 1 |

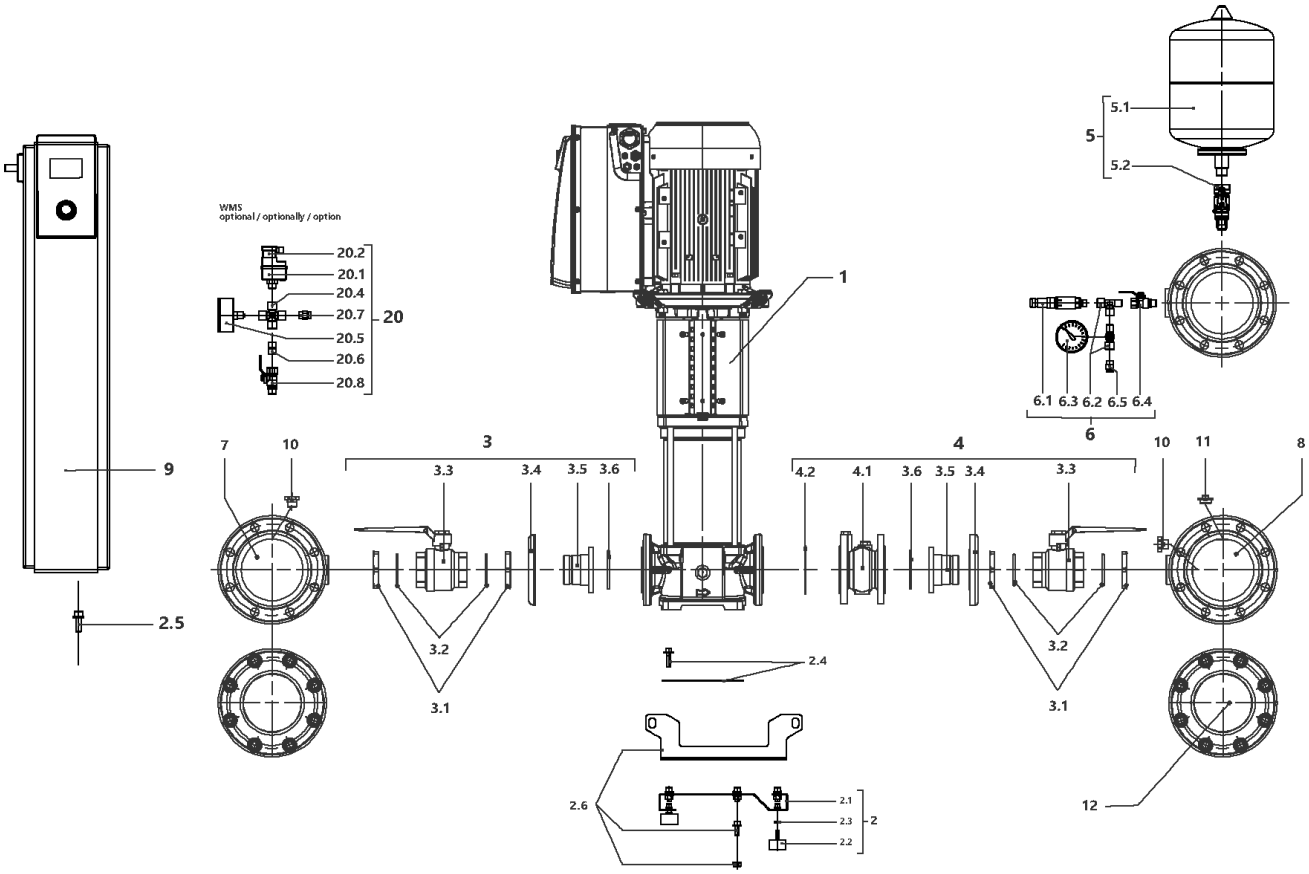
WMS
optional / optionally / option
20.2
20.1
20.4
20.7
20.5
20.6
20.8
20
1
5.1
5
5.2
6.1 6.3 6.2 6.5 6.4
6
9
7
10
3
3.3
3.4
3.5 3.6
4.2
4.1
3.6 3.5 3.4
4
10
11
8
2.5
3.2
3.1
2.4
2.6
2.1
2.3
2.2
2
12

## SiBoost Smart 4HELIX VE2202/3kW (2540939)

| Item | Article no. | Description | Quantity |
|---|---|---|---|
| 1 | | HELIX VE2202-3.0-4/16/E/S | 1 |
| 2 | 4203990 | BASE PLATE DE4 1450x420 M10 KIT | 1 |
| 2.1 | | > BASEPLATE_4x4/6/10/16V_E300_BOX_150 | 1 |
| 2.2 | 2027881 | > VIBRATION DAMPER M.10X20 D.70 | 1 |
| 2.3 | 2028281 | > NUT M10 DIN936 (ISO4035) 17H VZ | 1 |
| 2.4 | 4203978 | > HOLDER PUMP Siboost Helix 22 KIT | 1 |
| 2.5 | 4197084 | > HOLDER SWITCHBOX WILO Smart Control KIT | 1 |
| 2.6 | 4203979 | > LIFTING Siboost HELIX 22/36 KIT | 1 |
| 3 | 4203980 | SUCTION SIDE Siboost Helix 22 KIT | 1 |
| 3.1 | 2028689 | > NUT G2"X14 RG | 1 |
| 3.2 | 2028690 | > O-RING ID.53,35X5,33 EP851 | 1 |
| 3.2 | 2663977 | > BALL VALVE TYP250W IG.2" PN35 GIACOMINI | 1 |
| 3.4 | 2028285 | > LAPPED FLANGE DN50 1.4301 DIN2642P | 1 |
| 3.5 | 4203981 | > UNION INSERT DN50-G2" FLANGE AISI304 VP. | 1 |
| 3.6 | 2029911 | > O-RING ID.69,2X5,33 EPDM 70 SHR | 1 |
| 4 | 4203982 | DELIVERY SIDE Siboost Helix 22 KIT | 1 |
| 3.1 | 2028689 | > NUT G2"X14 RG | 1 |
| 3.2 | 2028690 | > O-RING ID.53,35X5,33 EP851 | 1 |
| 3.3 | 2663977 | > BALL VALVE TYP250W IG.2" PN35 GIACOMINI | 1 |
| 3.4 | 2028285 | > LAPPED FLANGE DN50 1.4301 DIN2642P | 1 |
| 3.5 | 4203981 | > UNION INSERT DN50-G2" FLANGE AISI304 VP. | 1 |
| 3.6 | 2029911 | > O-RING ID.69,2X5,33 EPDM 70 SHR | 1 |
| 4.1 | 2118590 | > NON RETURN VALVE DN50 PN16 VP. | 1 |
| 4.2 | 4202854 | > Flat gasket D61x107x2_DN50_PN25_FIBER VP | 1 |
| 5 | 4203983 | DIAPHREM TANK 8L/PN16 DIN4807/T5 KIT | 1 |
| 5.1 | 2045914 | > DIAPHREM TANK 8L TYP-DD 16BAR | 1 |
| 5.2 | 4189350 | > FLOW FITTING G3/4 FOR DIAPHRAG VESSEL VP | 1 |
| 6 | 4197076 | PRESSURE SENSOR/ GAUGE 0-16BAR KIT | 1 |
| 6.1 | 2085909 | > PRESS.SENSOR 1/4" 0-16BAR 4-20MA VP. | 1 |
| 6.2 | 4197077 | > T-PIECE 1/4" VP. | 1 |
| 6.3 | 2028692 | > PRESSURE GAUGE NG63-PN16-G1/4 | 1 |
| 6.4 | 2028291 | > BALL TAP R1/4" PN42 GIACOMINI R254DL | 1 |
| 6.5 | 2028691 | > BLOWGUN 1/4" MS 30BAR VP. | 1 |
| 7 | 4203991 | PIPE DE4 DN125-4x2"+2x1/4x1200 VP. | 1 |

| Item | Article no. | Description | Quantity |
|---|---|---|---|
| 8 | 4203992 | PIPE DE4 DN125-4x2"+2x1/4+1x3/4x1200 VP. | 1 |
| 9 | | W-CTRL-SCE-B-4x13A-T34-FM-ND2-AVC-PKG | 1 |
| 10 | 4197079 | PLUG G1/4"x10 AISI304 KIT | 1 |
| 11 | 2032654 | PLUG R3/4" MS VIEGA 1751 | 1 |
| 12 | 4203993 | BLIND-FLANGE DN125 PN10/16-A2 KIT | 1 |
| | 4203994 | > FLAT GASKET D.120/162X2 DN125 FIBRE VP. | 1 |
| | 2094573 | > NUT M16 DIN934 A2 1.4301 VP. | 1 |
| | 2107590 | > SCREW M16x70 DIN933 A2 (8 PIECES) | 1 |
| | 2094572 | > WASHER A17 DIN125 A2 1.4301 VP. | 1 |
| | | > FULL FLANGE ST.DN100 PN16 EN1092-1/05 A2 | 1 |
| | | > FLANGE COVER DN125 DIN 3443 FORM A | 1 |
| 20 | | ASSEMBLY WMS. DE-EB. +VP | 1 |
| 20.1 | 2028652 | > PRESSURE SWITCH PS3-ASR 1/(1,3) VP. | 1 |
| 20.2 | 2130983 | > PLUG PS3-415 WITH KABEL 1,5M 2NO VP. | 1 |
| 20.4 | 2028290 | > CROSSPIECE R1/4" MS-NICKEL | 1 |
| 20.5 | 2028687 | > PRESSURE GAUGE NG63 R1/4" HI.0-6BAR | 1 |
| 20.6 | 2054268 | > DUAL NIPPLE G1/4" x G1/4" MS VP. | 1 |
| 20.7 | 2028691 | > BLOWGUN 1/4" MS 30BAR VP. | 1 |
| 20.8 | 2028291 | > BALL TAP R1/4" PN42 GIACOMINI R254DL | 1 |

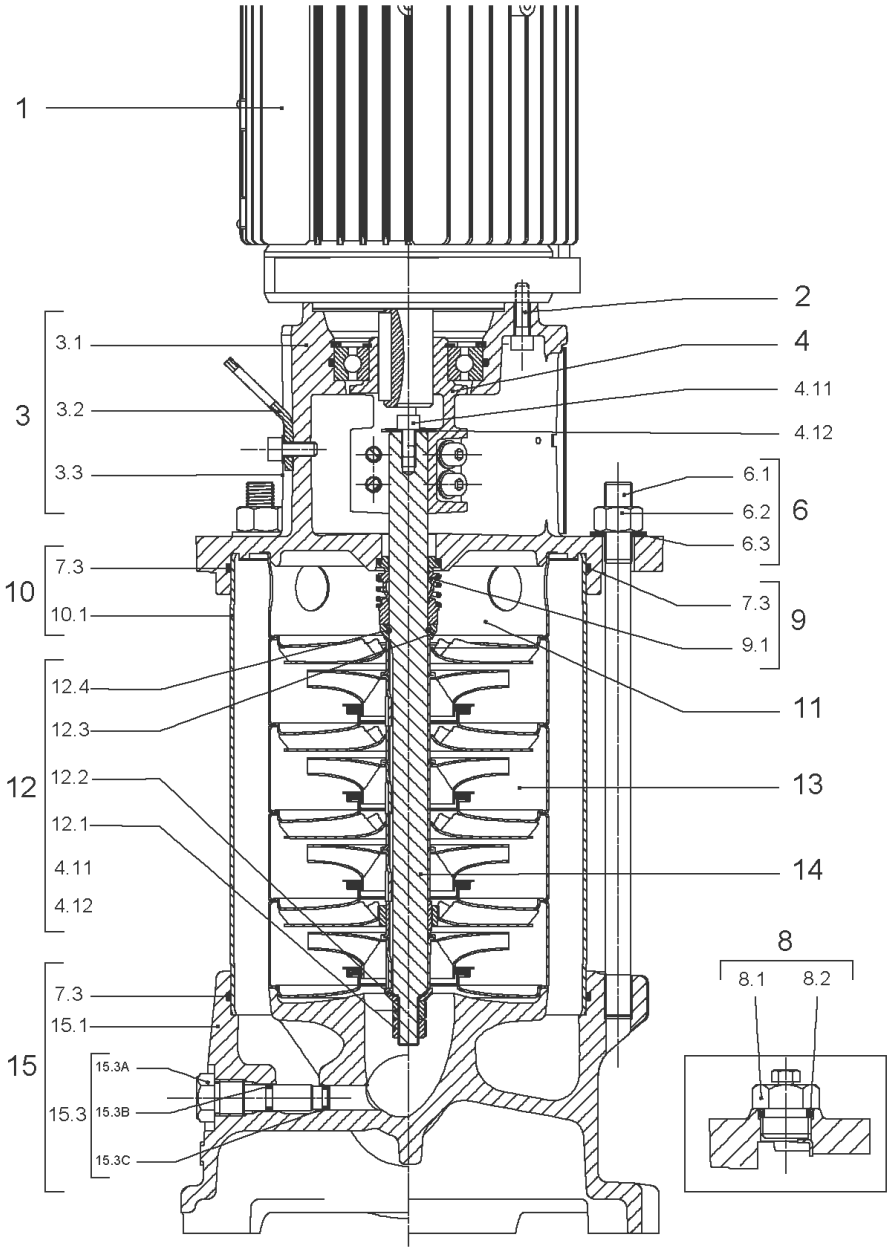
1
2
3.1
4
4.11
3
3.2
4.12
3.3
6.1
6.2
6
6.3
7.3
10
10.1
7.3
9
9.1
12.4
11
12.3
12
12.2
13
12.1
4.11
14
4.12
8
8.1
8.2
7.3
15.1
15
15.3A
15.3
15.3B
15.3C

| Item | Article no. | Description | Quantity |
|---|---|---|---|
| 1 | | DRIVE HELIX-VE2202-3.0-WE KIT | 1 |
| Note: MOTOR BRAND WILO ELEC | | | |
| 1 | | DRIVE HELIX-VE2202-3.0-IE4-WE KIT | 1 |
| Note: MOTOR BRAND WILO ELEC | | | |
| 2 | 4159707 | SCREW M8X30 (4 PIECES) | 1 |
| 3 | 4186356 | LANTERN HELIX OPTI 8" FT130 KIT | 1 |
| 3.1 | | > M+8_LANTERN_ONE-PIECE_FT130_CATA_DWA | 1 |
| 3.2 | 4184852 | > EYELET CPL.FT HELIX (2 PIECES) | 1 |
| 3.3 | 4184853 | > COUPLING PROTECTOR FT HELIX 8'' KIT | 1 |
| 4 | 4184854 | COUPLING D.22XD.28 FT130 HELIX KIT | 1 |
| 6 | 4179563 | STUD BOLT M16X198 KIT | 1 |
| 6.1 | | > TIE BOLT M16-198x24x44-1.4057 | 1 |
| 6.2 | 4179562 | > NUT M16 8.8 ISO4032 (4 PIECES) | 1 |
| 6.3 | 4097852 | > WASHER-CS-16.4-32-2.8-NFE25-511-A2 | 1 |
| 8 | 4186377 | FILING/PURGING PLUG 304 HELIX KIT | 1 |
| 8.1 | | > FILLING/VENTING-PLUG-MVI8/10"-304 | 1 |
| 8.2 | 4032291 | > O-RING 17x3 EPDM KTW/WRC | 1 |
| 9 | 4192148 | SEAL-KIT-HELIX22-36-52 FIRST O/E | 1 |
| 7.3 | 4179571 | > O-RING HOUSING PIPE HELIX22/36/52 VP. | 1 |
| 9.1 | 4179573 | > M.SEAL.HELIX22-36-52 O/E VP. | 1 |
| 10 | 4181154 | HOUSING PIPE D.204X164 1.4307 KIT | 1 |
| 7.3 | 4179571 | > O-RING HOUSING PIPE HELIX22/36/52 VP. | 1 |
| 10.1 | | > HOUSING-PIPE Ø204-M+2201/2202-304 | 1 |
| 11 | 4179143 | CENTERING STAGE-RETURN HELIX22 1.4307 VP | 1 |
| 12 | 4184856 | SHAFT EQUIPMENT HELIX 22 FIRST KIT | 1 |
| 13 | | HYDRAULIC HELIX V 2202 | 1 |
| 14 | 4184857 | SHAFT D.22X251 1.4057 VP. | 1 |
| 15 | 4186357 | EQUIPED HOUSING HELIX OPTI DN50 GJL KIT | 1 |
| 15.1 | | > PUMP CASING MONO.GJL M+8" DN50 DWA | 1 |
| 15.3 | 4106048 | > DRAIN/PRIMING PLUG EPDM HELIX FIRST KIT | 1 |
| 15.3A | | >> DRAIN AND PRIMING PLUG-VMI10"-304 | 1 |
| 15.3B | 4032293 | >> O-RING-10x3-EPDM-KTW/WRC | 1 |
| 15.3C | 4233957 | >> O-RING ID.9 EPDM VP. | 1 |
| 7.3 | 4179571 | > O-RING HOUSING PIPE HELIX22/36/52 VP. | 1 |

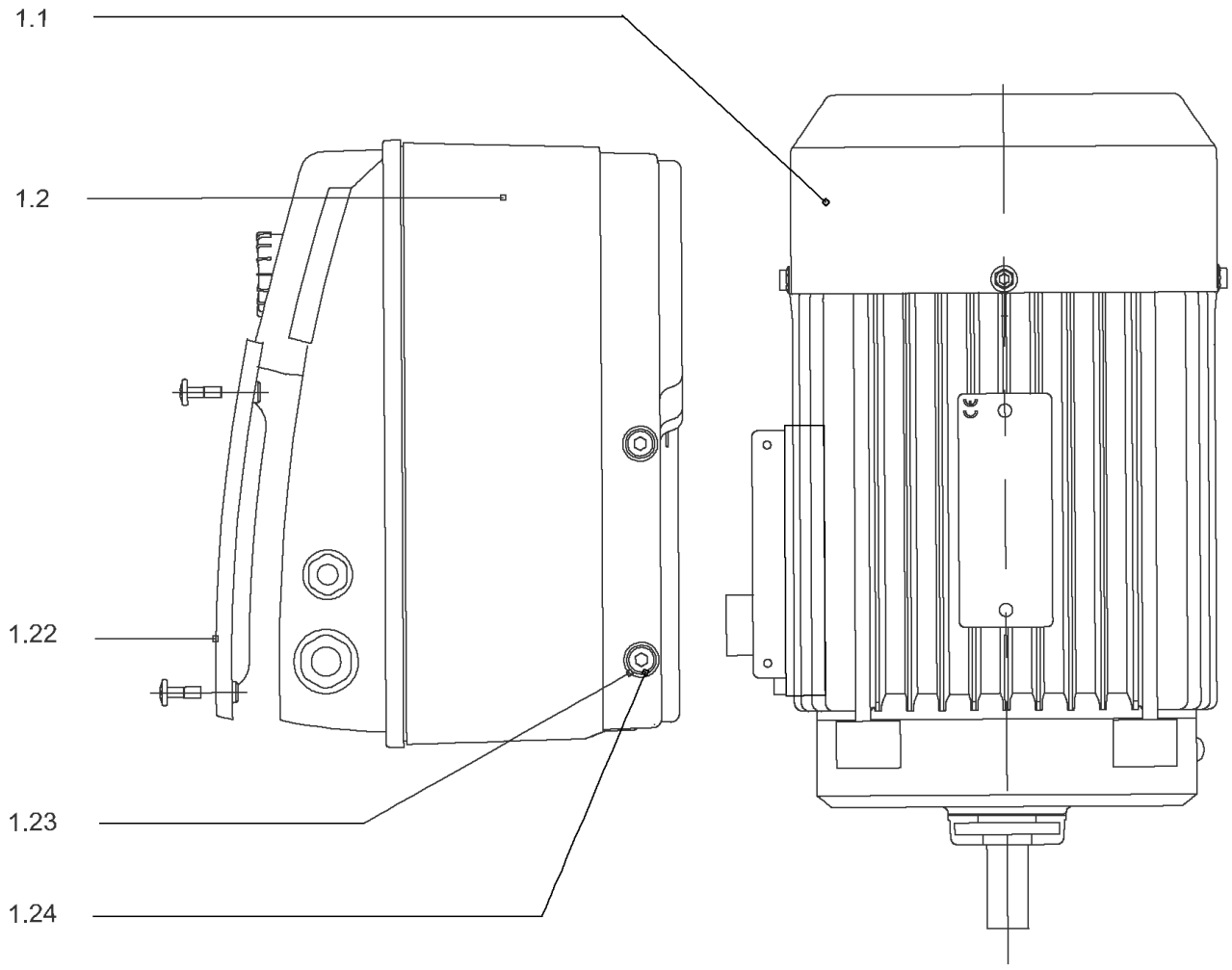
1.1
1.2
1.22
1.23
1.24

## DRIVE HELIX-VE2202-3.0-WE KIT

| Item | Article no. | Description | Quantity |
|---|---|---|---|
| 1.1 | | M3-T638P55V18H-100F13-SU-N28-WE-IE2 VP. | 1 |
| Note: no longer available/nicht mehrlieferbar/n'est plus disponible | | | |
| | | SPARE PARTS MOTOR:ON REQUEST | 1 |
| 1.2 | 4186411 | MODULE HELIX-VE2202-3.0-IE2-WE KIT | 1 |
| 1.22 | 2054227 | > MODULE COVER/GASKET TL3/4 KIT | 1 |
| 1.23 | 4215716 | > SCREW M5X16 DIN912 8.8 A2A (4pieces) VP. | 1 |
| 1.24 | 2057978 | > RONDELLE A5,3 DIN6797 FST ZN (4 PIECES) | 1 |

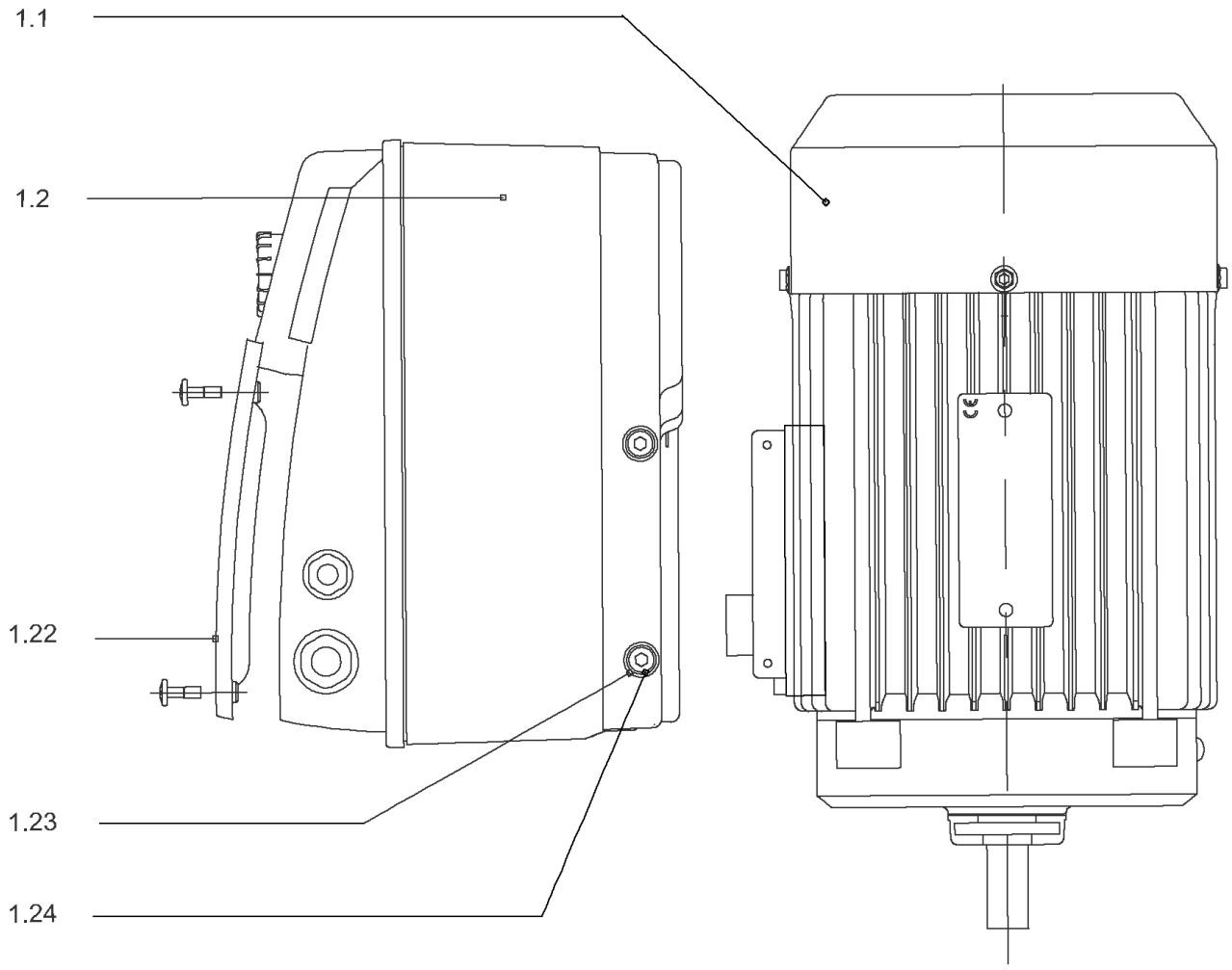
1.1
1.2
1.22
1.23
1.24

## DRIVE HELIX-VE2202-3.0-IE4-WE KIT

| Item | Article no. | Description | Quantity |
|---|---|---|---|
| 1.1 | 4207922 | MOTOR 3/2/100 3~ 380V 60HZ IE4 WE VP. | 1 |
| | | SPARE PARTS MOTOR:ON REQUEST | 1 |
| 1.2 | 4209341 | MODULE HELIX-VE2202-3.0-IE4-WE KIT | 1 |
| 1.22 | 2054227 | > MODULE COVER/GASKET TL3/4 KIT | 1 |
| 1.23 | 4215716 | > SCREW M5X16 DIN912 8.8 A2A (4pieces) VP. | 1 |
| 1.24 | 2057978 | > RONDELLE A5,3 DIN6797 FST ZN (4 PIECES) | 1 |

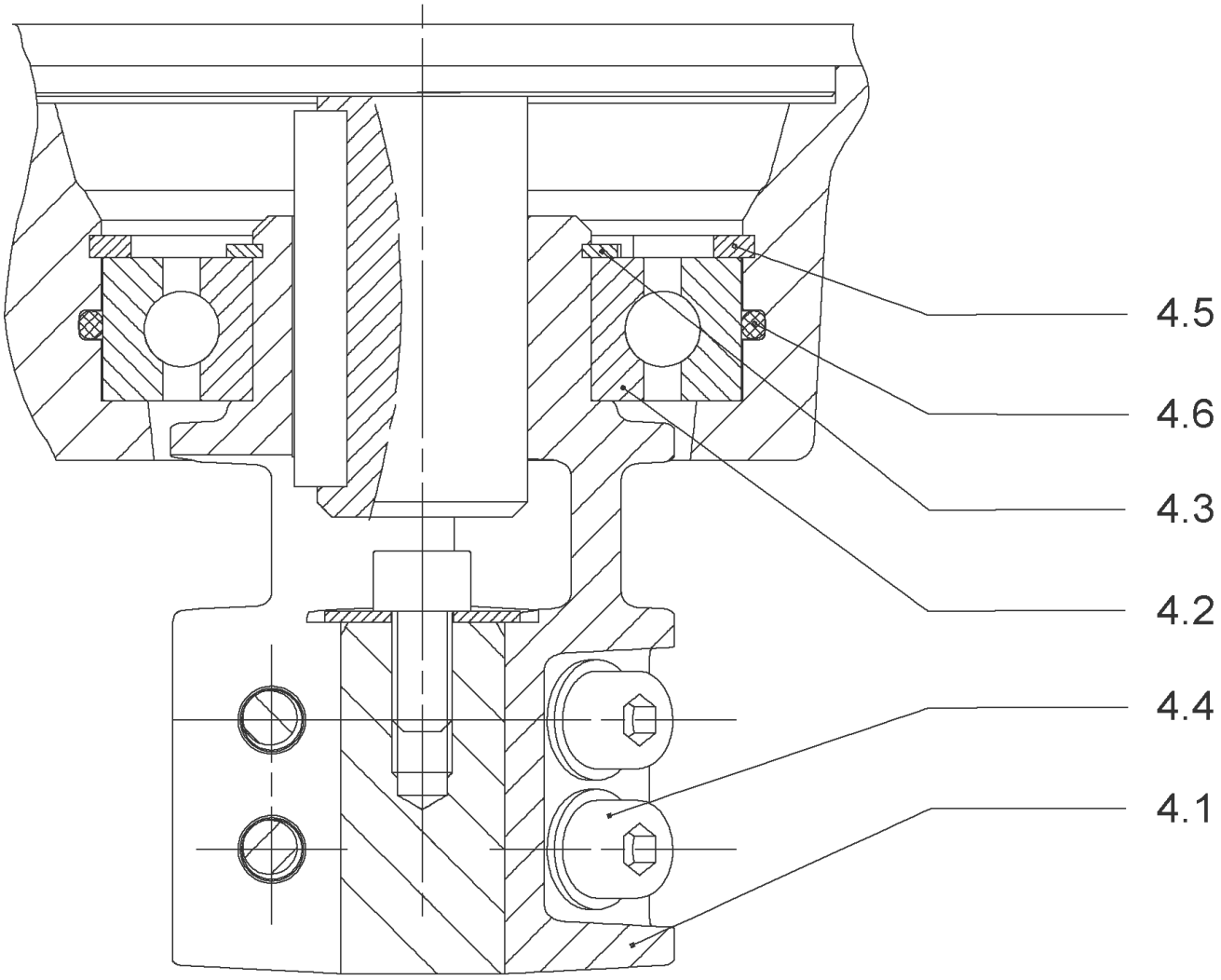
4.5
4.6
4.3
4.2
4.4
4.1

## COUPLING D.22XD.28 FT130 HELIX KIT (4184854)

| Item | Article no. | Description | Quantity |
|---|---|---|---|
| 4.1 | | COUPLING-VMI-Ø22xØ28-FT130-MACHINED | 1 |
| 4.2 | 2131022 | BALL BEARING 6209/ZZ-C3(HT)VP. | 1 |
| 4.3 | 4233930 | CIRCLIP-FOR-BORES-D45x1,75 VP. | 1 |
| 4.4 | 4157726 | SCREW KIT M8X30 (4 PIECES) | 1 |
| 4.5 | 4234252 | CIRCLIPS 85X3 VP. | 1 |
| 4.6 | 4234243 | O-RING 85X3 VP. | 1 |
| | | NOMEL CONTACT WASHER 8x16x1,4 STEEL ZC | 1 |

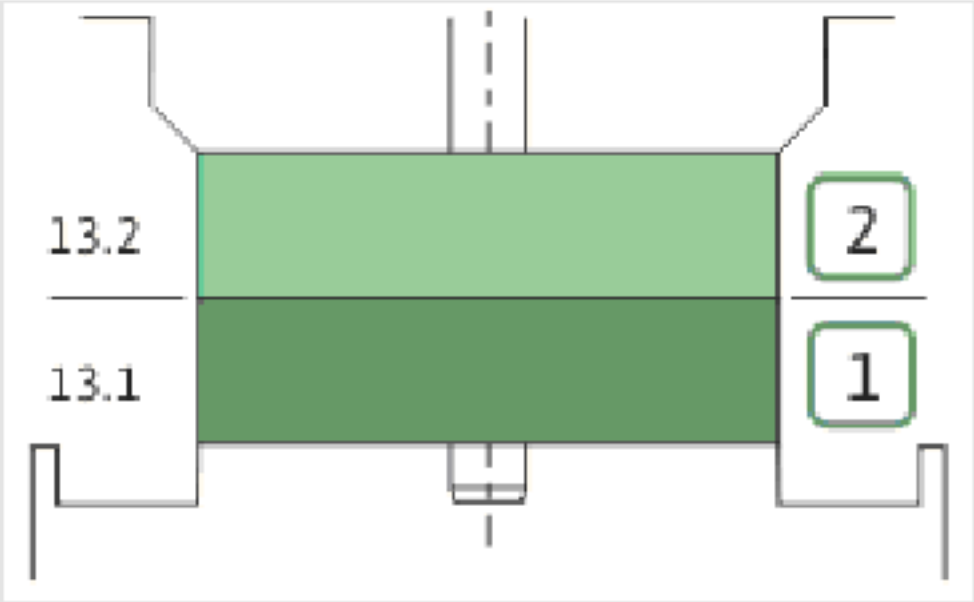
13.2
13.1
2
1

| Item | Article no. | Description | Quantity |
|---|---|---|---|
| 13.1 | 4157739 | FIRST STAGE HELIX 22 1.4307 KIT | 1 |
| | | > IMPELLER-H1-M+22-304 | 1 |
| | | > MACH.STG-CASING-WOGV-WNR-M+22-304 | 1 |
| 13.2 | 4157740 | BEARING STAGE HELIX 22 1.4307 KIT | 1 |
| | | > IMPELLER-H2-M+22-304 | 1 |
| | | > MACH.BEARING-STG-CASING-WNR-M+22-304 | 1 |
| | | > SHAFT-SLEEVE-D26xD22x16-CW | 1 |

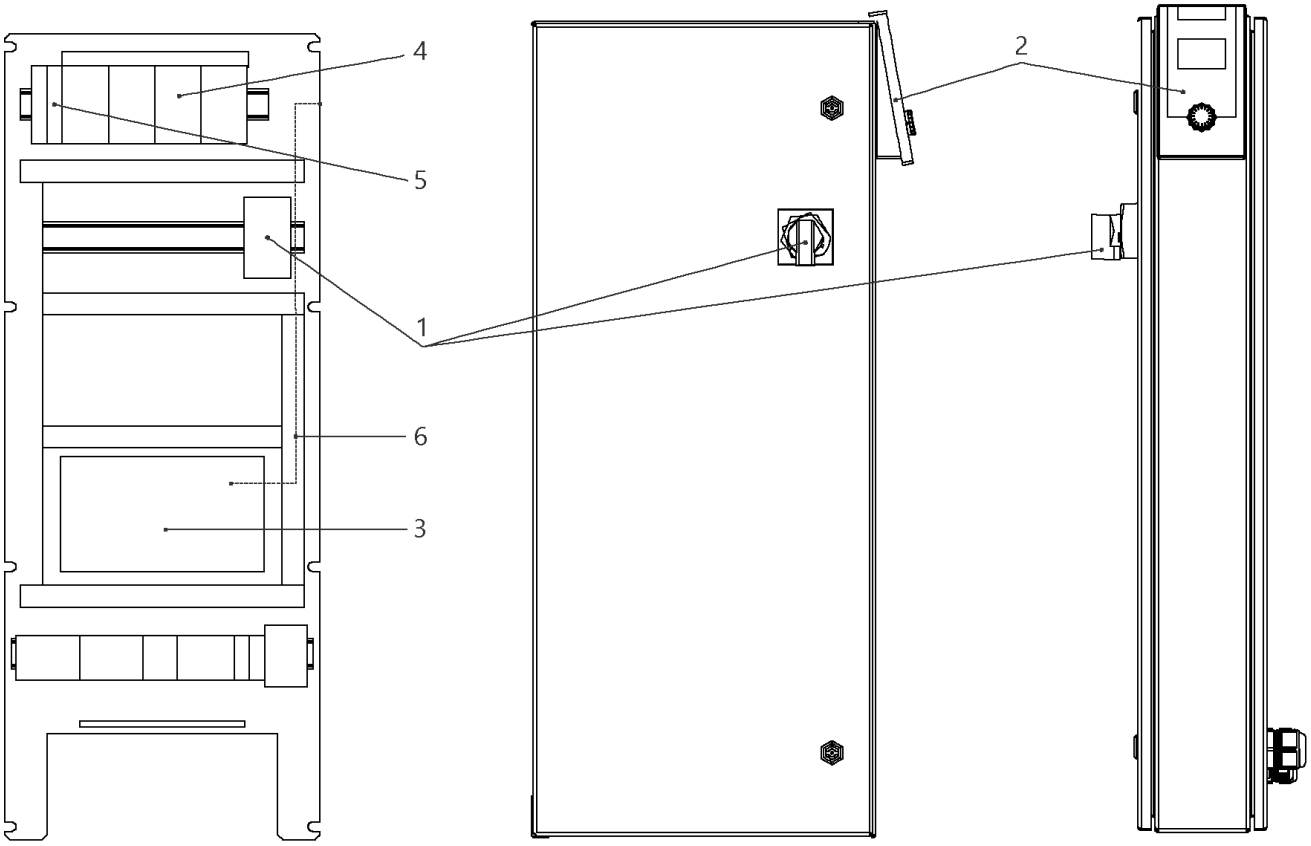
4
5
1
6
3
2

## W-CTRL-SCE-B-4x13A-T34-FM-ND2-AVC-PKG

| Item | Article no. | Description | Quantity |
|---|---|---|---|
| 1 | 2104477 | MAIN SWITCH OT80F3 L105 KIT | 1 |
| Note: TO / BIS / JUSQU'AU 30/06/2015 | | | |
| 1 | 2104473 | MAIN SWITCH OT63F3 L105 KIT | 1 |
| Note: FROM / AB / À PARTIR DU 01/07/2015 | | | |
| 2 | 4184784 | CONTROL PANEL HMI SC KIT | 1 |
| 2 | 4185259 | ASSEMBLY DISPLAY SC PKG VP. | 1 |
| Note: DISPLAY ALONE / PLATINE SEULE | | | |
| 3 | 4185257 | ASSEMBLY CPU SCe Booster VP. | 1 |
| 5 | 2046288 | CIRCUIT BREAKER S201 B16 | 1 |
| 4 | 2051217 | AUTOM.CIRCUIT BREAKER S203 B16 TO7,5kW | 1 |
| 6 | 4194956 | PATCH CABLE RJ45 CAT6 1,0M BLUE SC-PANEL | 1 |

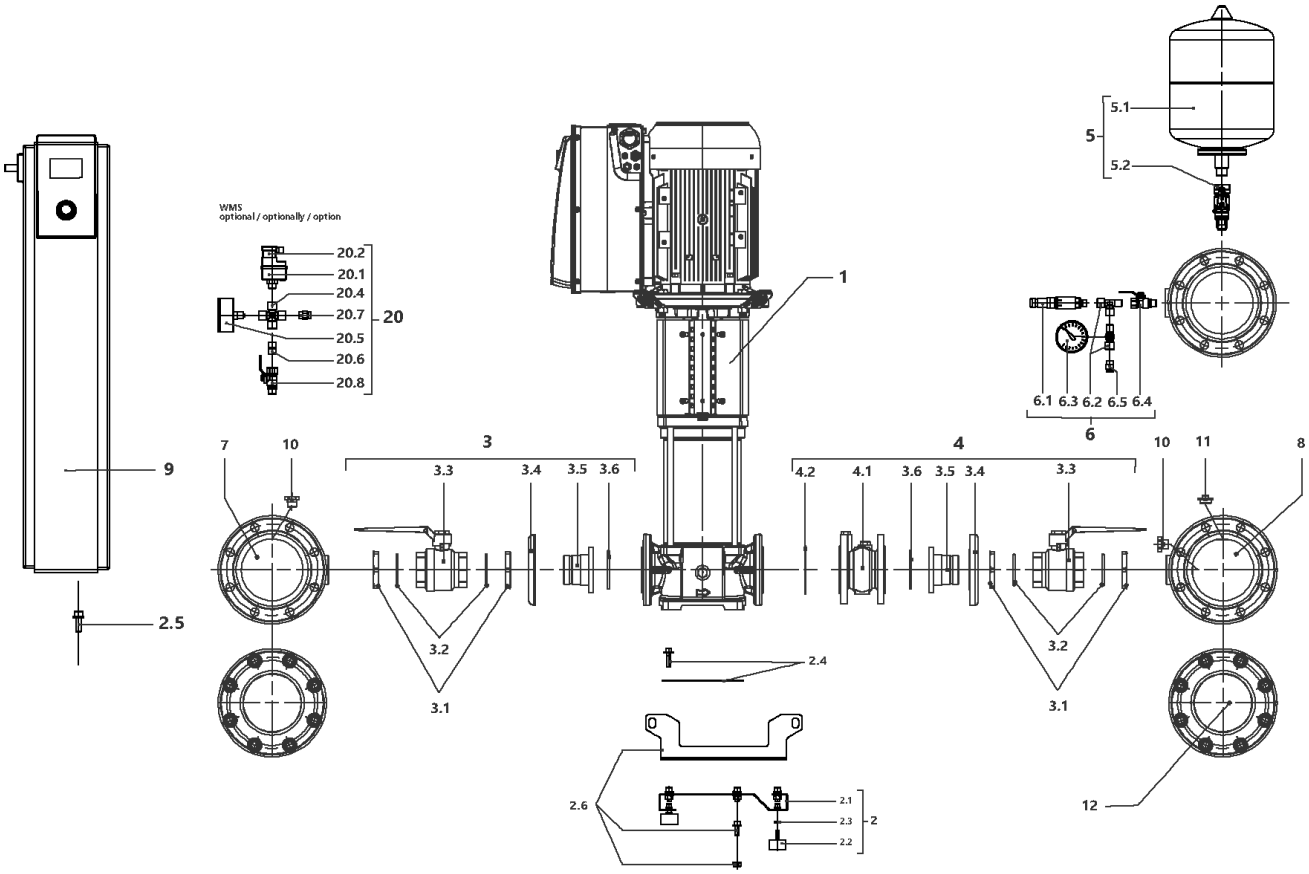
WMS
optional / optionally / option
20.2
20.1
20.4
20.7
20.5
20.6
20.8
20
1
5.1
5
5.2
6.1 6.3 6.2 6.5 6.4
6
9
7
10
3
3.3
3.4
3.5 3.6
4
4.2
4.1
3.6 3.5 3.4
3.3
10
11
8
2.5
3.2
3.1
2.4
3.2
3.1
2.6
2.1
2.3
2.2
2
12

## SiBoost Smart 4HELIX VE2202/4kW (2540909)

| Item | Article no. | Description | Quantity |
|---|---|---|---|
| 1 | | HELIX VE2202-4.0-4/16/E/S | 1 |
| 2 | 4203990 | BASE PLATE DE4 1450x420 M10 KIT | 1 |
| 2.1 | | > BASEPLATE_4x4/6/10/16V_E300_BOX_150 | 1 |
| 2.2 | 2027881 | > VIBRATION DAMPER M.10X20 D.70 | 1 |
| 2.3 | 2028281 | > NUT M10 DIN936 (ISO4035) 17H VZ | 1 |
| 2.4 | 4203978 | > HOLDER PUMP Siboost Helix 22 KIT | 1 |
| 2.5 | 4197084 | > HOLDER SWITCHBOX WILO Smart Control KIT | 1 |
| 2.6 | 4203979 | > LIFTING Siboost HELIX 22/36 KIT | 1 |
| 3 | 4203980 | SUCTION SIDE Siboost Helix 22 KIT | 1 |
| 3.1 | 2028689 | > NUT G2"X14 RG | 1 |
| 3.2 | 2028690 | > O-RING ID.53,35X5,33 EP851 | 1 |
| 3.2 | 2663977 | > BALL VALVE TYP250W IG.2" PN35 GIACOMINI | 1 |
| 3.4 | 2028285 | > LAPPED FLANGE DN50 1.4301 DIN2642P | 1 |
| 3.5 | 4203981 | > UNION INSERT DN50-G2" FLANGE AISI304 VP. | 1 |
| 3.6 | 2029911 | > O-RING ID.69,2X5,33 EPDM 70 SHR | 1 |
| 4 | 4203982 | DELIVERY SIDE Siboost Helix 22 KIT | 1 |
| 3.1 | 2028689 | > NUT G2"X14 RG | 1 |
| 3.2 | 2028690 | > O-RING ID.53,35X5,33 EP851 | 1 |
| 3.3 | 2663977 | > BALL VALVE TYP250W IG.2" PN35 GIACOMINI | 1 |
| 3.4 | 2028285 | > LAPPED FLANGE DN50 1.4301 DIN2642P | 1 |
| 3.5 | 4203981 | > UNION INSERT DN50-G2" FLANGE AISI304 VP. | 1 |
| 3.6 | 2029911 | > O-RING ID.69,2X5,33 EPDM 70 SHR | 1 |
| 4.1 | 2118590 | > NON RETURN VALVE DN50 PN16 VP. | 1 |
| 4.2 | 4202854 | > Flat gasket D61x107x2_DN50_PN25_FIBER VP | 1 |
| 5 | 4203983 | DIAPHREM TANK 8L/PN16 DIN4807/T5 KIT | 1 |
| 5.1 | 2045914 | > DIAPHREM TANK 8L TYP-DD 16BAR | 1 |
| 5.2 | 4189350 | > FLOW FITTING G3/4 FOR DIAPHRAG VESSEL VP | 1 |
| 6 | 4197076 | PRESSURE SENSOR/ GAUGE 0-16BAR KIT | 1 |
| 6.1 | 2085909 | > PRESS.SENSOR 1/4" 0-16BAR 4-20MA VP. | 1 |
| 6.2 | 4197077 | > T-PIECE 1/4" VP. | 1 |
| 6.3 | 2028692 | > PRESSURE GAUGE NG63-PN16-G1/4 | 1 |
| 6.4 | 2028291 | > BALL TAP R1/4" PN42 GIACOMINI R254DL | 1 |
| 6.5 | 2028691 | > BLOWGUN 1/4" MS 30BAR VP. | 1 |
| 7 | 4203991 | PIPE DE4 DN125-4x2"+2x1/4x1200 VP. | 1 |

| Item | Article no. | Description | Quantity |
|---|---|---|---|
| 8 | 4203992 | PIPE DE4 DN125-4x2"+2x1/4+1x3/4x1200 VP. | 1 |
| 9 | | W-CTRL-SCE-B-4x13A-T34-FM-ND2-AVC-PKG | 1 |
| 10 | 4197079 | PLUG G1/4"x10 AISI304 KIT | 1 |
| 11 | 2032654 | PLUG R3/4" MS VIEGA 1751 | 1 |
| 12 | 4203993 | BLIND-FLANGE DN125 PN10/16-A2 KIT | 1 |
| | 4203994 | > FLAT GASKET D.120/162X2 DN125 FIBRE VP. | 1 |
| | 2094573 | > NUT M16 DIN934 A2 1.4301 VP. | 1 |
| | 2107590 | > SCREW M16x70 DIN933 A2 (8 PIECES) | 1 |
| | 2094572 | > WASHER A17 DIN125 A2 1.4301 VP. | 1 |
| | | > FULL FLANGE ST.DN100 PN16 EN1092-1/05 A2 | 1 |
| | | > FLANGE COVER DN125 DIN 3443 FORM A | 1 |
| 20 | | ASSEMBLY WMS. DE-EB. +VP | 1 |
| 20.1 | 2028652 | > PRESSURE SWITCH PS3-ASR 1/(1,3) VP. | 1 |
| 20.2 | 2130983 | > PLUG PS3-415 WITH KABEL 1,5M 2NO VP. | 1 |
| 20.4 | 2028290 | > CROSSPIECE R1/4" MS-NICKEL | 1 |
| 20.5 | 2028687 | > PRESSURE GAUGE NG63 R1/4" HI.0-6BAR | 1 |
| 20.6 | 2054268 | > DUAL NIPPLE G1/4" x G1/4" MS VP. | 1 |
| 20.7 | 2028691 | > BLOWGUN 1/4" MS 30BAR VP. | 1 |
| 20.8 | 2028291 | > BALL TAP R1/4" PN42 GIACOMINI R254DL | 1 |

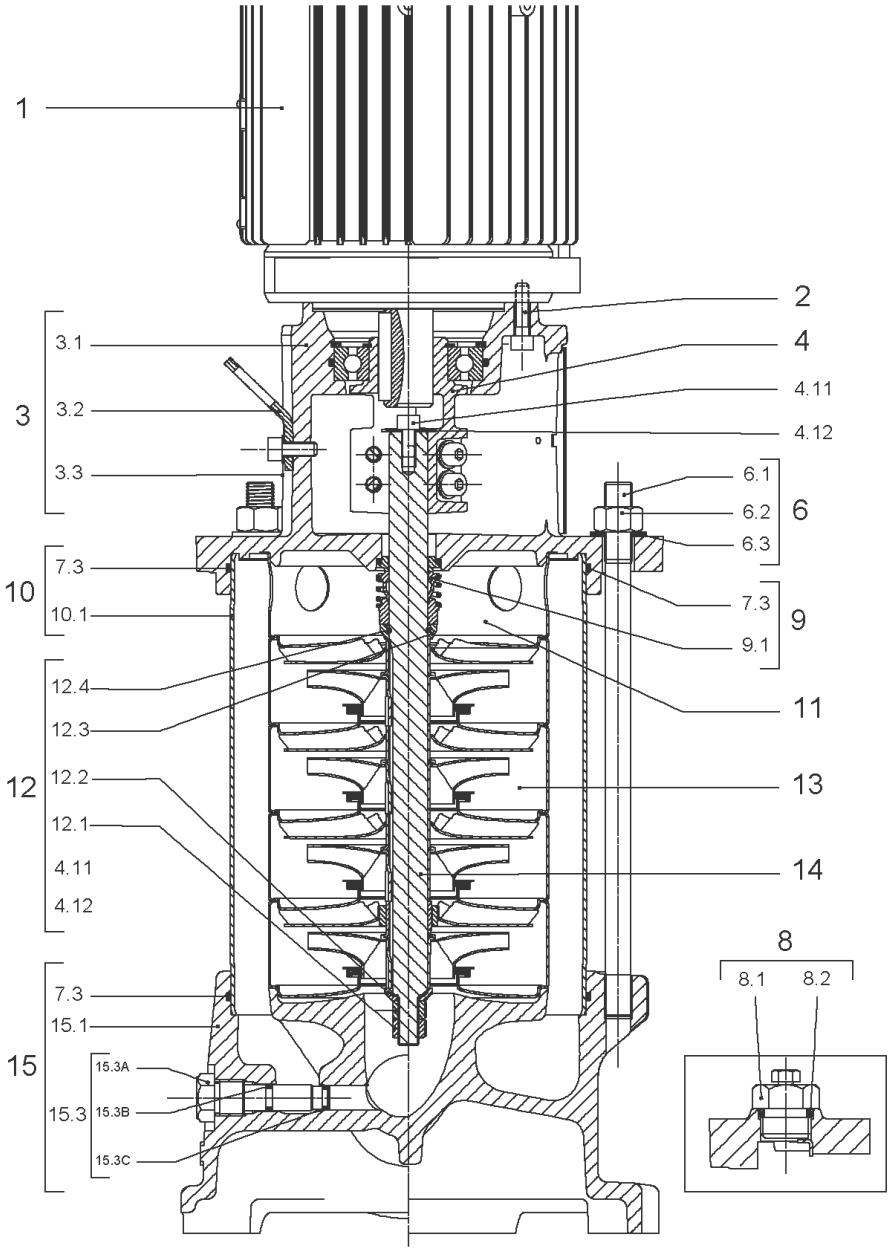
1
2
3.1
4
4.11
3
3.2
4.12
3.3
6.1
6.2
6
6.3
7.3
10
10.1
7.3
9
9.1
12.4
11
12.3
12
12.2
13
12.1
4.11
14
4.12
8
8.1
8.2
7.3
15.1
15
15.3A
15.3
15.3B
15.3C

| Item | Article no. | Description | Quantity |
|---|---|---|---|
| 1 | | DRIVE HELIX-VE2202-4.0-WE KIT | 1 |
| Note: MOTOR BRAND WILO ELEC | | | |
| 1 | | DRIVE HELIX-VE2202-IE2-ATB KIT | 1 |
| Note: MOTOR BRAND ATB | | | |
| 1 | | DRIVE HELIX-VE2202-4.0-IE4-WE KIT | 1 |
| Note: MOTOR BRAND WILO ELEC | | | |
| 2 | 4159707 | SCREW M8X30 (4 PIECES) | 1 |
| 3 | 4186356 | LANTERN HELIX OPTI 8" FT130 KIT | 1 |
| 3.1 | | > M+8_LANTERN_ONE-PIECE_FT130_CATA_DWA | 1 |
| 3.2 | 4184852 | > EYELET CPL.FT HELIX (2 PIECES) | 1 |
| 3.3 | 4184853 | > COUPLING PROTECTOR FT HELIX 8'' KIT | 1 |
| 4 | 4184854 | COUPLING D.22XD.28 FT130 HELIX KIT | 1 |
| 6 | 4179563 | STUD BOLT M16X198 KIT | 1 |
| 6.1 | | > TIE BOLT M16-198x24x44-1.4057 | 1 |
| 6.2 | 4179562 | > NUT M16 8.8 ISO4032 (4 PIECES) | 1 |
| 6.3 | 4097852 | > WASHER-CS-16.4-32-2.8-NFE25-511-A2 | 1 |
| 8 | 4186377 | FILING/PURGING PLUG 304 HELIX KIT | 1 |
| 8.1 | | > FILLING/VENTING-PLUG-MVI8/10"-304 | 1 |
| 8.2 | 4032291 | > O-RING 17x3 EPDM KTW/WRC | 1 |
| 9 | 4192148 | SEAL-KIT-HELIX22-36-52 FIRST O/E | 1 |
| 7.3 | 4179571 | > O-RING HOUSING PIPE HELIX22/36/52 VP. | 1 |
| 9.1 | 4179573 | > M.SEAL.HELIX22-36-52 O/E VP. | 1 |
| 10 | 4181154 | HOUSING PIPE D.204X164 1.4307 KIT | 1 |
| 7.3 | 4179571 | > O-RING HOUSING PIPE HELIX22/36/52 VP. | 1 |
| 10.1 | | > HOUSING-PIPE Ø204-M+2201/2202-304 | 1 |
| 11 | 4179143 | CENTERING STAGE-RETURN HELIX22 1.4307 VP | 1 |
| 12 | 4184856 | SHAFT EQUIPMENT HELIX 22 FIRST KIT | 1 |
| 13 | | HYDRAULIC HELIX V 2202 | 1 |
| 14 | 4184857 | SHAFT D.22X251 1.4057 VP. | 1 |
| 15 | 4186357 | EQUIPED HOUSING HELIX OPTI DN50 GJL KIT | 1 |
| 15.1 | | > PUMP CASING MONO.GJL M+8" DN50 DWA | 1 |
| 15.3 | 4106048 | > DRAIN/PRIMING PLUG EPDM HELIX FIRST KIT | 1 |
| 15.3A | | >> DRAIN AND PRIMING PLUG-VMI10"-304 | 1 |
| 15.3B | 4032293 | >> O-RING-10x3-EPDM-KTW/WRC | 1 |

| Item | Article no. | Description | Quantity |
|---|---|---|---|
| 15.3C | 4233957 | >> O-RING ID.9 EPDM VP. | 1 |
| 7.3 | 4179571 | > O-RING HOUSING PIPE HELIX22/36/52 VP. | 1 |

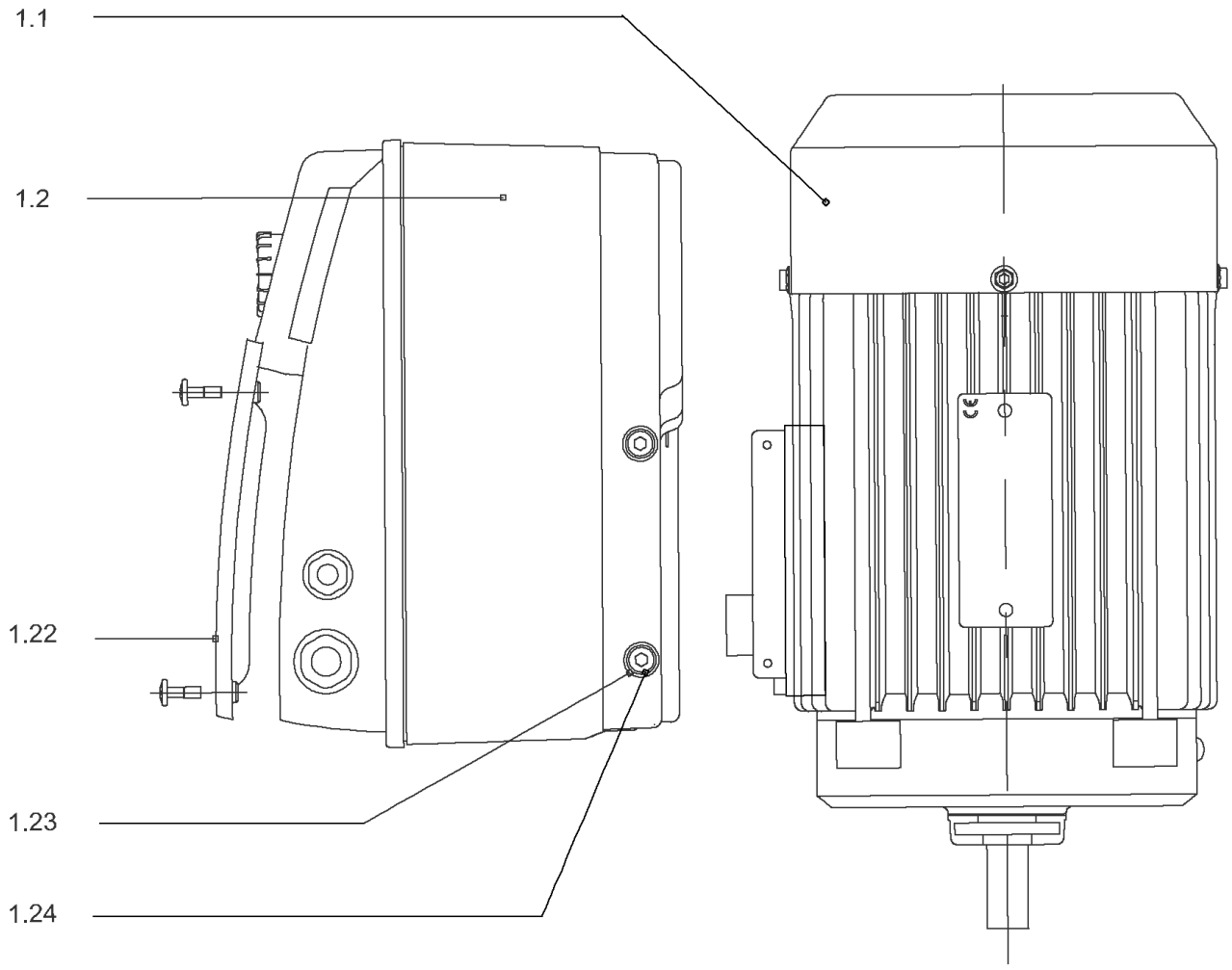
1.1
1.2
1.22
1.23
1.24

## DRIVE HELIX-VE2202-4.0-WE KIT

| Item | Article no. | Description | Quantity |
|---|---|---|---|
| 1.1 | 4188824 | MO.4/2/112 3~380V 60Hz IE2 WE VP. | 1 |
| | | SPARE PARTS MOTOR:ON REQUEST | 1 |
| 1.2 | 4186409 | MODULE HELIX-VE2202-4.0-IE2-WE KIT | 1 |
| 1.22 | 2054227 | > MODULE COVER/GASKET TL3/4 KIT | 1 |
| 1.23 | 4215716 | > SCREW M5X16 DIN912 8.8 A2A (4pieces) VP. | 1 |
| 1.24 | 2057978 | > RONDELLE A5,3 DIN6797 FST ZN (4 PIECES) | 1 |

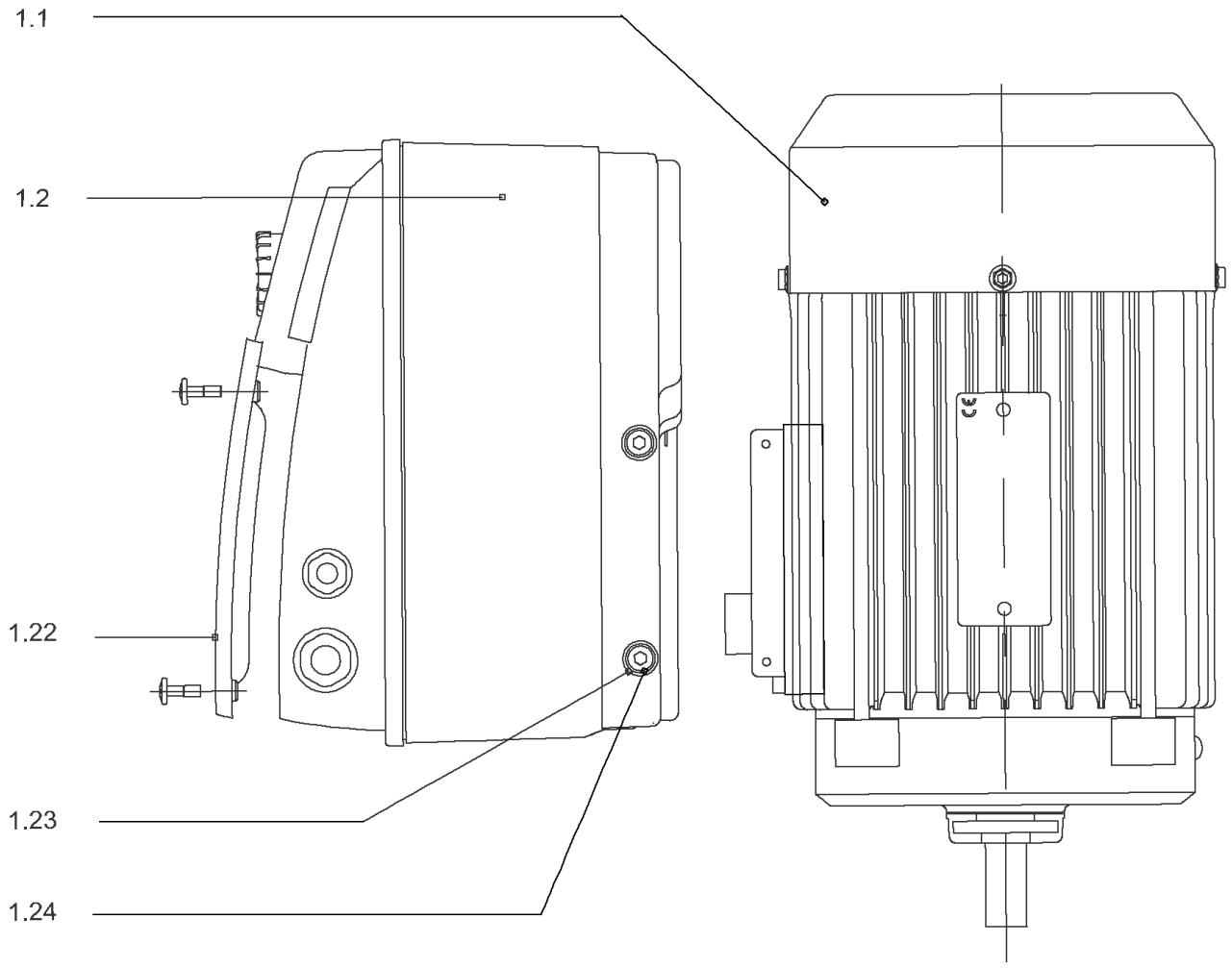
1.1
1.2
1.22
1.23
1.24

## DRIVE HELIX-VE2202-IE2-ATB KIT

| Item | Article no. | Description | Quantity |
|---|---|---|---|
| 1.1 | | MOTOR 4/2/112 3~ 380V 60HZ IE2 ATB VP. | 1 |
| Note: no longer available/nicht mehrlieferbar/n'est plus disponible | | | |
| | | SPARE PARTS MOTOR:ON REQUEST | 1 |
| 1.2 | 4185022 | MODULE HELIX-VE2202-4.0-IE2-ATB KIT | 1 |
| 1.22 | 2054227 | > MODULE COVER/GASKET TL3/4 KIT | 1 |
| 1.23 | 4215716 | > SCREW M5X16 DIN912 8.8 A2A (4pieces) VP. | 1 |
| 1.24 | 2057978 | > RONDELLE A5,3 DIN6797 FST ZN (4 PIECES) | 1 |

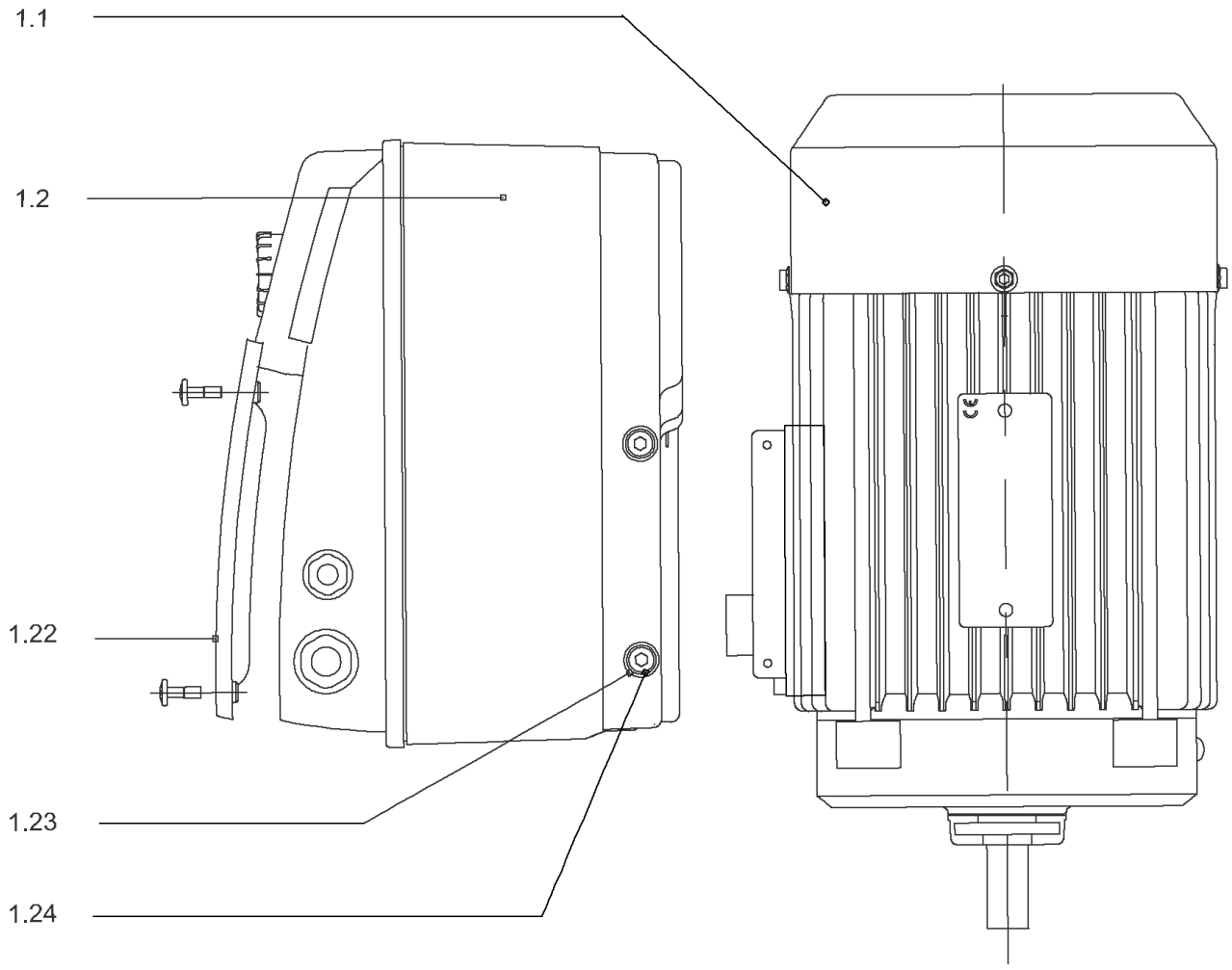
1.1
1.2
1.22
1.23
1.24

## DRIVE HELIX-VE2202-4.0-IE4-WE KIT

| Item | Article no. | Description | Quantity |
|---|---|---|---|
| 1.1 | 4207924 | MOTOR 4/2/112 3~ 380V 60HZ IE4 WE VP. | 1 |
| | | SPARE PARTS MOTOR:ON REQUEST | 1 |
| 1.2 | 4209608 | MODULE HELIX-VE2202-4.0-IE4-WE KIT | 1 |
| 1.22 | 2054227 | > MODULE COVER/GASKET TL3/4 KIT | 1 |
| 1.23 | 4215716 | > SCREW M5X16 DIN912 8.8 A2A (4pieces) VP. | 1 |
| 1.24 | 2057978 | > RONDELLE A5,3 DIN6797 FST ZN (4 PIECES) | 1 |

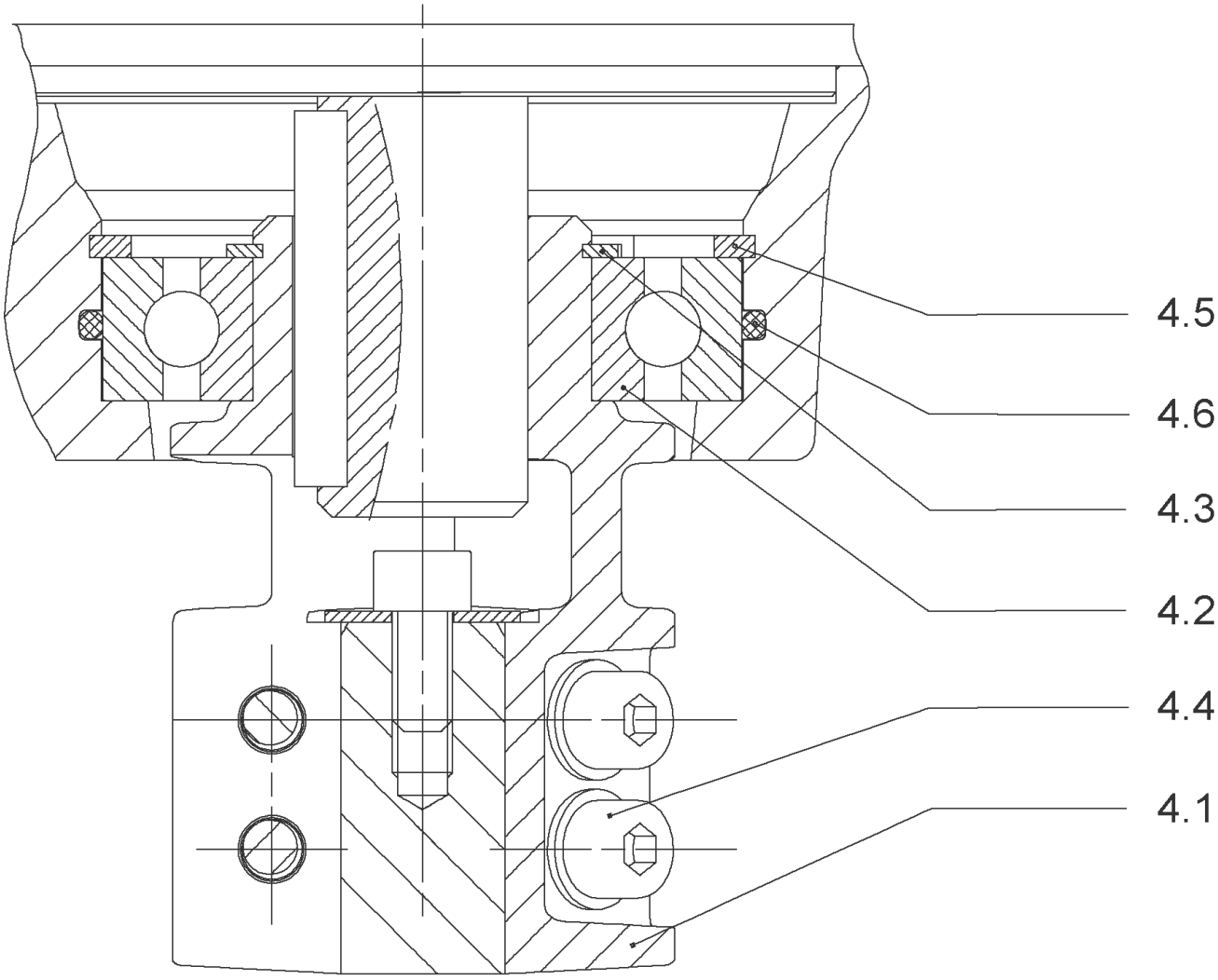
4.5
4.6
4.3
4.2
4.4
4.1

## COUPLING D.22XD.28 FT130 HELIX KIT (4184854)

| Item | Article no. | Description | Quantity |
|---|---|---|---|
| 4.1 | | COUPLING-VMI-Ø22xØ28-FT130-MACHINED | 1 |
| 4.2 | 2131022 | BALL BEARING 6209/ZZ-C3(HT)VP. | 1 |
| 4.3 | 4233930 | CIRCLIP-FOR-BORES-D45x1,75 VP. | 1 |
| 4.4 | 4157726 | SCREW KIT M8X30 (4 PIECES) | 1 |
| 4.5 | 4234252 | CIRCLIPS 85X3 VP. | 1 |
| 4.6 | 4234243 | O-RING 85X3 VP. | 1 |
| | | NOMEL CONTACT WASHER 8x16x1,4 STEEL ZC | 1 |

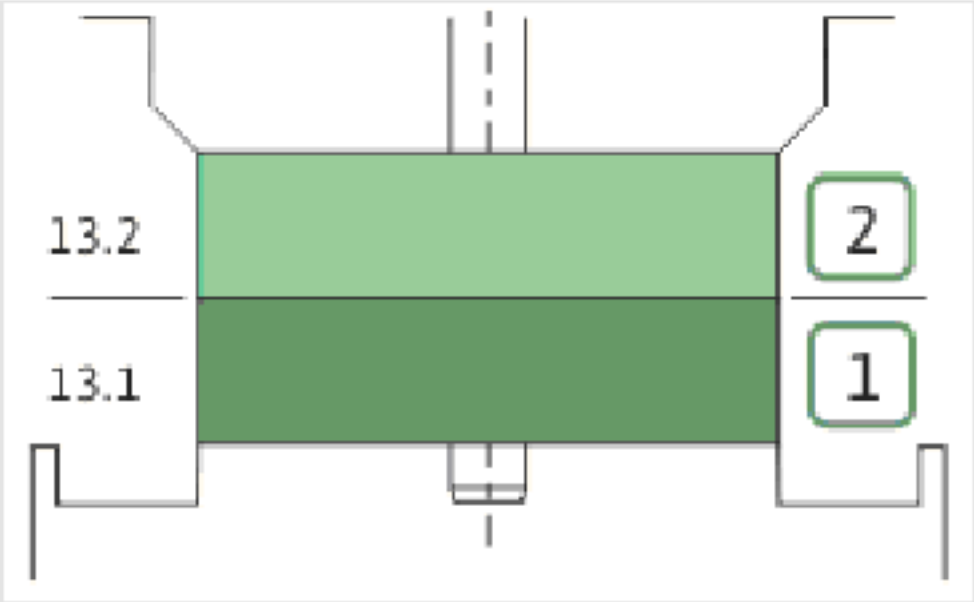
13.2
13.1
2
1

| Item | Article no. | Description | Quantity |
|---|---|---|---|
| 13.1 | 4157739 | FIRST STAGE HELIX 22 1.4307 KIT | 1 |
| | | > IMPELLER-H1-M+22-304 | 1 |
| | | > MACH.STG-CASING-WOGV-WNR-M+22-304 | 1 |
| 13.2 | 4157740 | BEARING STAGE HELIX 22 1.4307 KIT | 1 |
| | | > IMPELLER-H2-M+22-304 | 1 |
| | | > MACH.BEARING-STG-CASING-WNR-M+22-304 | 1 |
| | | > SHAFT-SLEEVE-D26xD22x16-CW | 1 |

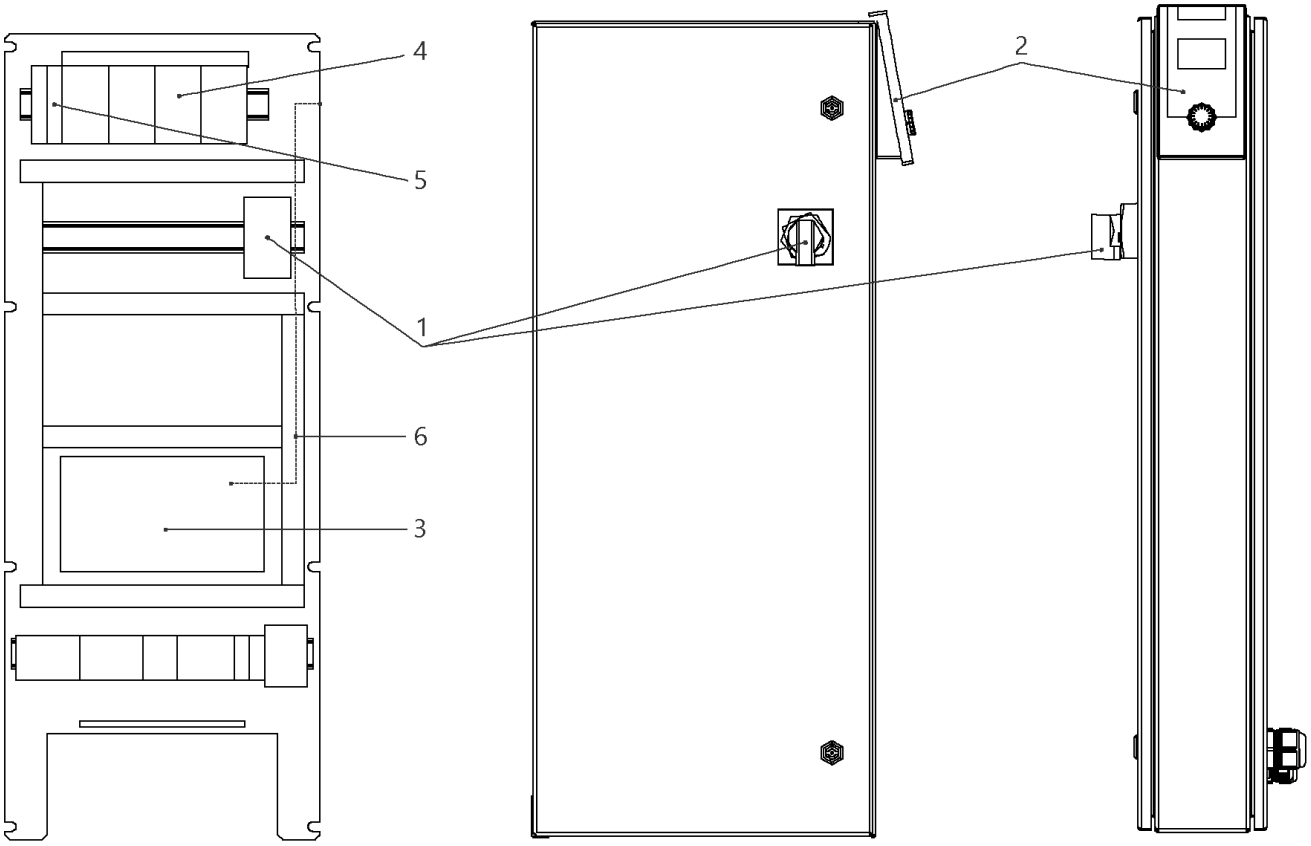
4
5
1
6
3
2

## W-CTRL-SCE-B-4x13A-T34-FM-ND2-AVC-PKG

| Item | Article no. | Description | Quantity |
|---|---|---|---|
| 1 | 2104477 | MAIN SWITCH OT80F3 L105 KIT | 1 |
| Note: TO / BIS / JUSQU'AU 30/06/2015 | | | |
| 1 | 2104473 | MAIN SWITCH OT63F3 L105 KIT | 1 |
| Note: FROM / AB / À PARTIR DU 01/07/2015 | | | |
| 2 | 4184784 | CONTROL PANEL HMI SC KIT | 1 |
| 2 | 4185259 | ASSEMBLY DISPLAY SC PKG VP. | 1 |
| Note: DISPLAY ALONE / PLATINE SEULE | | | |
| 3 | 4185257 | ASSEMBLY CPU SCe Booster VP. | 1 |
| 5 | 2046288 | CIRCUIT BREAKER S201 B16 | 1 |
| 4 | 2051217 | AUTOM.CIRCUIT BREAKER S203 B16 TO7,5kW | 1 |
| 6 | 4194956 | PATCH CABLE RJ45 CAT6 1,0M BLUE SC-PANEL | 1 |

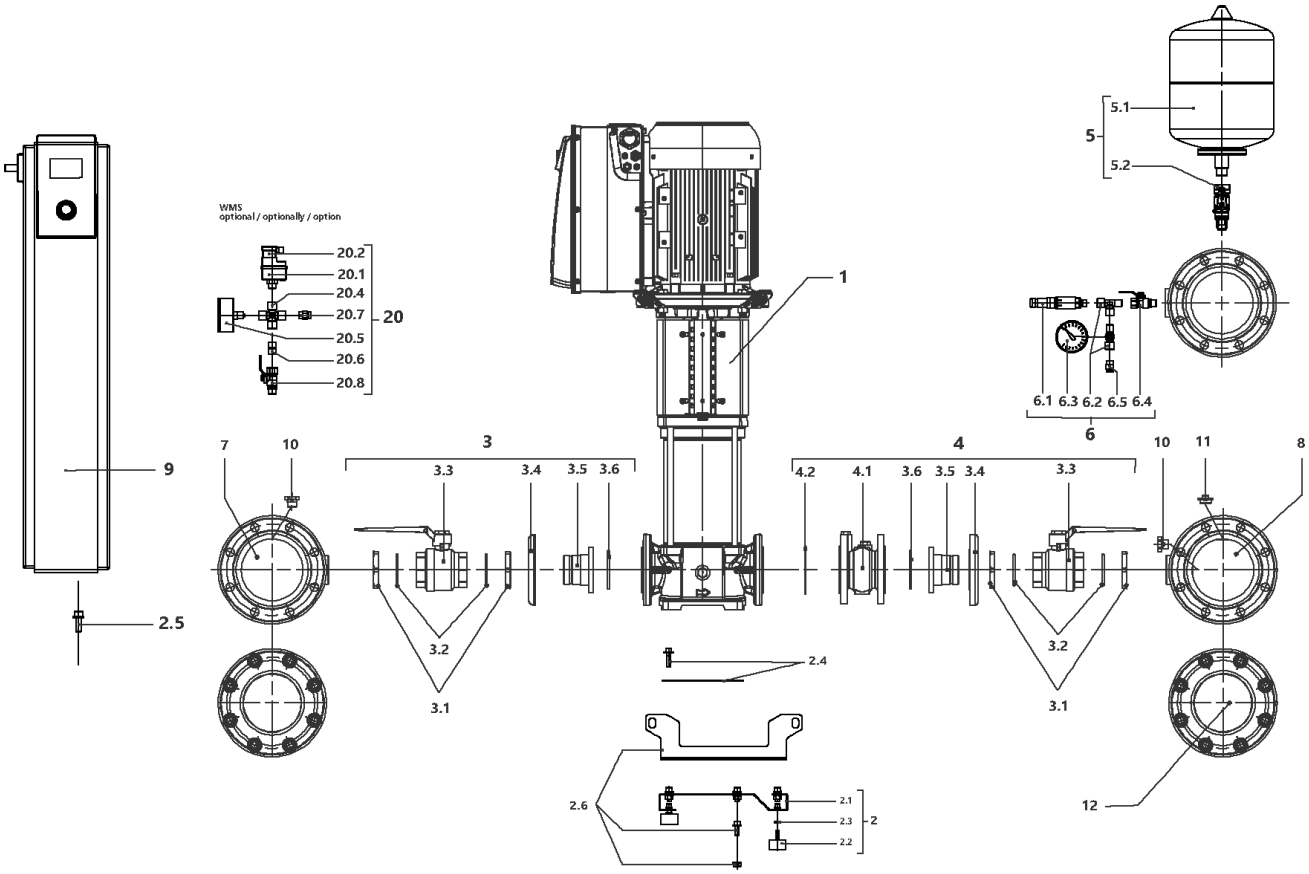
WMS
optional / optionally / option
20.2
20.1
20.4
20.7
20.5
20.6
20.8
20
1
5.1
5
5.2
6.1 6.3 6.2 6.5 6.4
6
9
7
10
3
3.3
3.4
3.5 3.6
4.2
4.1
3.6 3.5 3.4
4
10
11
8
2.5
3.2
3.1
2.4
2.6
2.1
2.3
2.2
2
12

## SiBoost Smart 4HELIX VE2203 (2540910)

| Item | Article no. | Description | Quantity |
|---|---|---|---|
| 1 | | HELIX VE2203-4/16/E/S-FF240 | 1 |
| 2 | 4203990 | BASE PLATE DE4 1450x420 M10 KIT | 1 |
| 2.1 | | > BASEPLATE_4x4/6/10/16V_E300_BOX_150 | 1 |
| 2.2 | 2027881 | > VIBRATION DAMPER M.10X20 D.70 | 1 |
| 2.3 | 2028281 | > NUT M10 DIN936 (ISO4035) 17H VZ | 1 |
| 2.4 | 4203978 | > HOLDER PUMP Siboost Helix 22 KIT | 1 |
| 2.5 | 4197084 | > HOLDER SWITCHBOX WILO Smart Control KIT | 1 |
| 2.6 | 4203979 | > LIFTING Siboost HELIX 22/36 KIT | 1 |
| 3 | 4203980 | SUCTION SIDE Siboost Helix 22 KIT | 1 |
| 3.1 | 2028689 | > NUT G2"X14 RG | 1 |
| 3.2 | 2028690 | > O-RING ID.53,35X5,33 EP851 | 1 |
| 3.2 | 2663977 | > BALL VALVE TYP250W IG.2" PN35 GIACOMINI | 1 |
| 3.4 | 2028285 | > LAPPED FLANGE DN50 1.4301 DIN2642P | 1 |
| 3.5 | 4203981 | > UNION INSERT DN50-G2" FLANGE AISI304 VP. | 1 |
| 3.6 | 2029911 | > O-RING ID.69,2X5,33 EPDM 70 SHR | 1 |
| 4 | 4203982 | DELIVERY SIDE Siboost Helix 22 KIT | 1 |
| 3.1 | 2028689 | > NUT G2"X14 RG | 1 |
| 3.2 | 2028690 | > O-RING ID.53,35X5,33 EP851 | 1 |
| 3.3 | 2663977 | > BALL VALVE TYP250W IG.2" PN35 GIACOMINI | 1 |
| 3.4 | 2028285 | > LAPPED FLANGE DN50 1.4301 DIN2642P | 1 |
| 3.5 | 4203981 | > UNION INSERT DN50-G2" FLANGE AISI304 VP. | 1 |
| 3.6 | 2029911 | > O-RING ID.69,2X5,33 EPDM 70 SHR | 1 |
| 4.1 | 2118590 | > NON RETURN VALVE DN50 PN16 VP. | 1 |
| 4.2 | 4202854 | > Flat gasket D61x107x2_DN50_PN25_FIBER VP | 1 |
| 5 | 4203983 | DIAPHREM TANK 8L/PN16 DIN4807/T5 KIT | 1 |
| 5.1 | 2045914 | > DIAPHREM TANK 8L TYP-DD 16BAR | 1 |
| 5.2 | 4189350 | > FLOW FITTING G3/4 FOR DIAPHRAG VESSEL VP | 1 |
| 6 | 4197076 | PRESSURE SENSOR/ GAUGE 0-16BAR KIT | 1 |
| 6.1 | 2085909 | > PRESS.SENSOR 1/4" 0-16BAR 4-20MA VP. | 1 |
| 6.2 | 4197077 | > T-PIECE 1/4" VP. | 1 |
| 6.3 | 2028692 | > PRESSURE GAUGE NG63-PN16-G1/4 | 1 |
| 6.4 | 2028291 | > BALL TAP R1/4" PN42 GIACOMINI R254DL | 1 |
| 6.5 | 2028691 | > BLOWGUN 1/4" MS 30BAR VP. | 1 |
| 7 | 4203991 | PIPE DE4 DN125-4x2"+2x1/4x1200 VP. | 1 |

| Item | Article no. | Description | Quantity |
|---|---|---|---|
| 8 | 4203992 | PIPE DE4 DN125-4x2"+2x1/4+1x3/4x1200 VP. | 1 |
| 9 | | W-CTRL-SCE-B-4x13A-T34-FM-ND2-AVC-PKG | 1 |
| 10 | 4197079 | PLUG G1/4"x10 AISI304 KIT | 1 |
| 11 | 2032654 | PLUG R3/4" MS VIEGA 1751 | 1 |
| 12 | 4203993 | BLIND-FLANGE DN125 PN10/16-A2 KIT | 1 |
| | 4203994 | > FLAT GASKET D.120/162X2 DN125 FIBRE VP. | 1 |
| | 2094573 | > NUT M16 DIN934 A2 1.4301 VP. | 1 |
| | 2107590 | > SCREW M16x70 DIN933 A2 (8 PIECES) | 1 |
| | 2094572 | > WASHER A17 DIN125 A2 1.4301 VP. | 1 |
| | | > FULL FLANGE ST.DN100 PN16 EN1092-1/05 A2 | 1 |
| | | > FLANGE COVER DN125 DIN 3443 FORM A | 1 |
| 20 | | ASSEMBLY WMS. DE-EB. +VP | 1 |
| 20.1 | 2028652 | > PRESSURE SWITCH PS3-ASR 1/(1,3) VP. | 1 |
| 20.2 | 2130983 | > PLUG PS3-415 WITH KABEL 1,5M 2NO VP. | 1 |
| 20.4 | 2028290 | > CROSSPIECE R1/4" MS-NICKEL | 1 |
| 20.5 | 2028687 | > PRESSURE GAUGE NG63 R1/4" HI.0-6BAR | 1 |
| 20.6 | 2054268 | > DUAL NIPPLE G1/4" x G1/4" MS VP. | 1 |
| 20.7 | 2028691 | > BLOWGUN 1/4" MS 30BAR VP. | 1 |
| 20.8 | 2028291 | > BALL TAP R1/4" PN42 GIACOMINI R254DL | 1 |

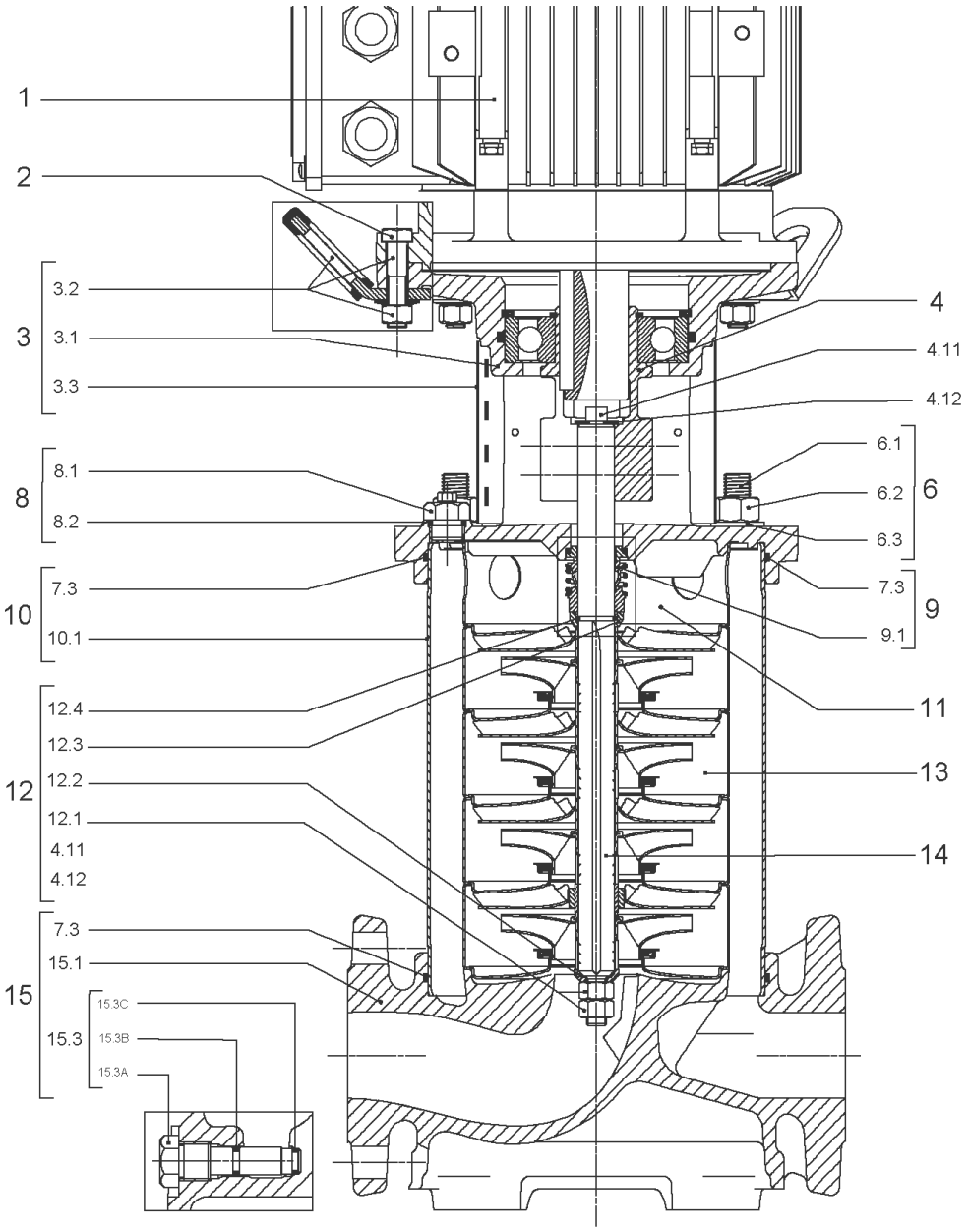
1
2
3
3.2
3.1
3.3
4
4.11
4.12
8
8.1
8.2
6
6.1
6.2
6.3
10
7.3
10.1
9
7.3
9.1
11
12
12.4
12.3
12.2
12.1
4.11
4.12
13
14
15
7.3
15.1
15.3
15.3C
15.3B
15.3A

| Item | Article no. | Description | Quantity |
|---|---|---|---|
| 1 | | DRIVE HELIX-VE2203-FF240-IE2-ATB KIT | 1 |
| Note: MOTOR BRAND ATB | | | |
| 1 | | DRIVE HELIX-VE2203-FF240-IE4-WE KIT | 1 |
| Note: MOTOR BRAND WILO ELEC | | | |
| | | SPARE PARTS MOTOR:ON REQUEST | 1 |
| 2 | 4174093 | SCREW M12X50 (4 PIECES) | 1 |
| 3 | 4186358 | LANTERN HELIX OPTI 8" FF240 KIT | 1 |
| 3.1 | | > M+8_LANTERN_ONE-PIECE_FF240_CATA_DWA | 1 |
| 3.2 | 4186346 | > EYELET CPL.FF240 HELIX (4 PIECES) | 1 |
| 3.3 | 4184853 | > COUPLING PROTECTOR FT HELIX 8'' KIT | 1 |
| 4 | 4186347 | COUPLING D.22XD.38 FF240T130 HELIX KIT | 1 |
| 6 | 4186342 | STUD BOLT M16X253 KIT | 1 |
| 6.1 | | > TIE BOLT M16-253x24x44-1.4057 | 1 |
| 6.2 | 4179562 | > NUT M16 8.8 ISO4032 (4 PIECES) | 1 |
| 6.3 | 4097852 | > WASHER-CS-16.4-32-2.8-NFE25-511-A2 | 1 |
| 8 | 4186377 | FILING/PURGING PLUG 304 HELIX KIT | 1 |
| 8.1 | | > FILLING/VENTING-PLUG-MVI8/10"-304 | 1 |
| 8.2 | 4032291 | > O-RING 17x3 EPDM KTW/WRC | 1 |
| 9 | 4192148 | SEAL-KIT-HELIX22-36-52 FIRST O/E | 1 |
| 7.3 | 4179571 | > O-RING HOUSING PIPE HELIX22/36/52 VP. | 1 |
| 9.1 | 4179573 | > M.SEAL.HELIX22-36-52 O/E VP. | 1 |
| 10 | 4181161 | HOUSING PIPE D.204X214 1.4307 KIT | 1 |
| 10.1 | | > HOUSING-PIPE Ø204-M+2203-304 | 1 |
| 7.3 | 4179571 | > O-RING HOUSING PIPE HELIX22/36/52 VP. | 1 |
| 11 | 4179143 | CENTERING STAGE-RETURN HELIX22 1.4307 VP | 1 |
| 12 | 4184856 | SHAFT EQUIPMENT HELIX 22 FIRST KIT | 1 |
| 13 | | HYDRAULIC HELIX V 2203 | 1 |
| 14 | 4186343 | SHAFT D.22X301 1.4057 VP. | 1 |
| 15 | 4186357 | EQUIPED HOUSING HELIX OPTI DN50 GJL KIT | 1 |
| 15.1 | | > PUMP CASING MONO.GJL M+8" DN50 DWA | 1 |
| 15.3 | 4106048 | > DRAIN/PRIMING PLUG EPDM HELIX FIRST KIT | 1 |
| 15.3A | | >> DRAIN AND PRIMING PLUG-VMI10"-304 | 1 |
| 15.3B | 4032293 | >> O-RING-10x3-EPDM-KTW/WRC | 1 |
| 15.3C | 4233957 | >> O-RING ID.9 EPDM VP. | 1 |

| Item | Article no. | Description | Quantity |
|---|---|---|---|
| 7.3 | 4179571 | > O-RING HOUSING PIPE HELIX22/36/52 VP. | 1 |

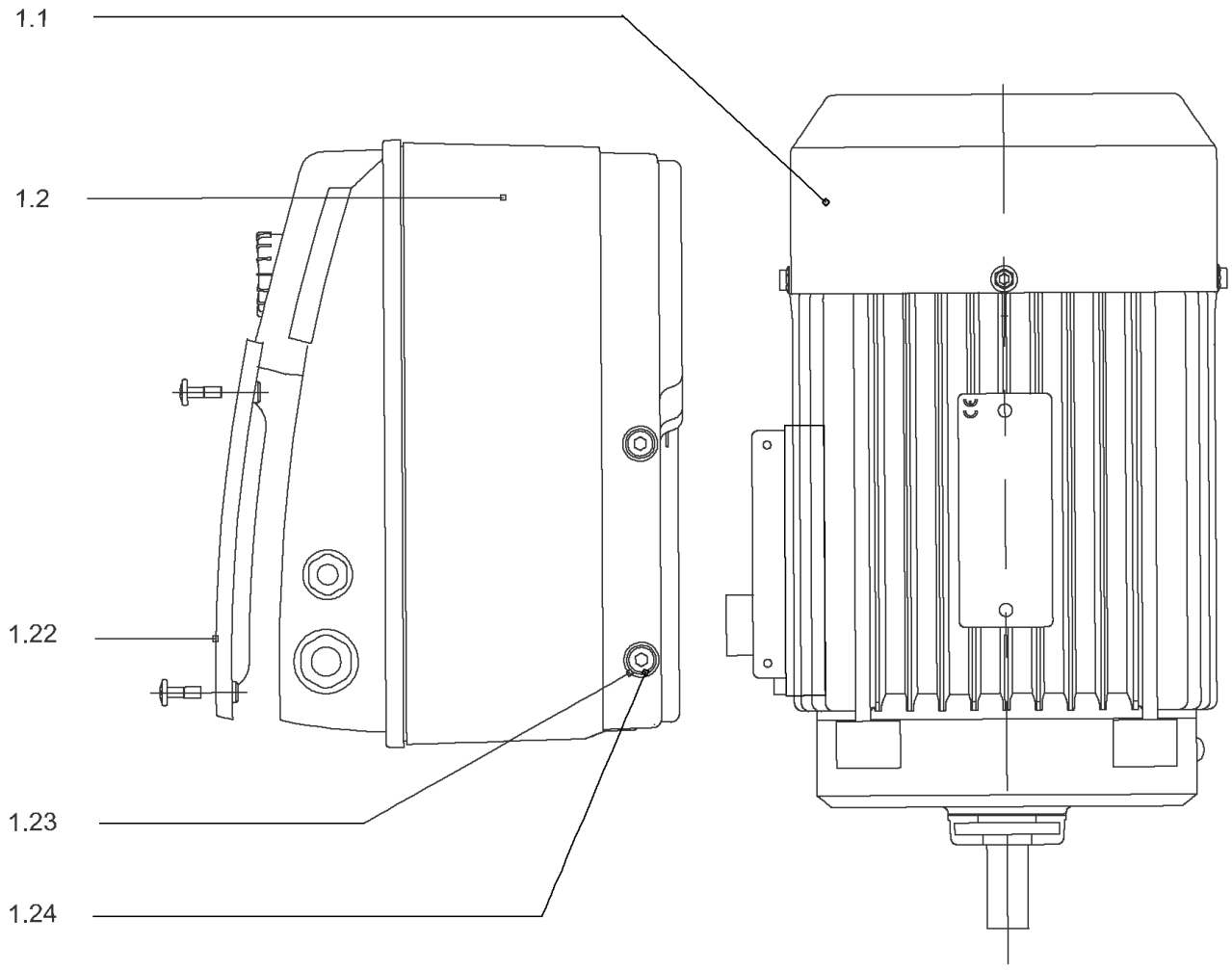
1.1
1.2
1.22
1.23
1.24

## DRIVE HELIX-VE2203-FF240-IE2-ATB KIT

| Item | Article no. | Description | Quantity |
|---|---|---|---|
| 1.1 | | MOTOR 5,5/2/132 FF240 3~380V 60HZ IE2 VP | 1 |
| Note: no longer available/nicht mehrlieferbar/n'est plus disponible | | | |
| | | SPARE PARTS MOTOR:ON REQUEST | 1 |
| 1.2 | 4186782 | MODULE HELIX-VE2203-IE2-ATB KIT | 1 |
| 1.22 | 2111344 | > MODULE COVER/GASKET TL5 KIT | 1 |
| 1.23 | 4215716 | > SCREW M5X16 DIN912 8.8 A2A (4pieces) VP. | 1 |
| 1.24 | 2057978 | > RONDELLE A5,3 DIN6797 FST ZN (4 PIECES) | 1 |

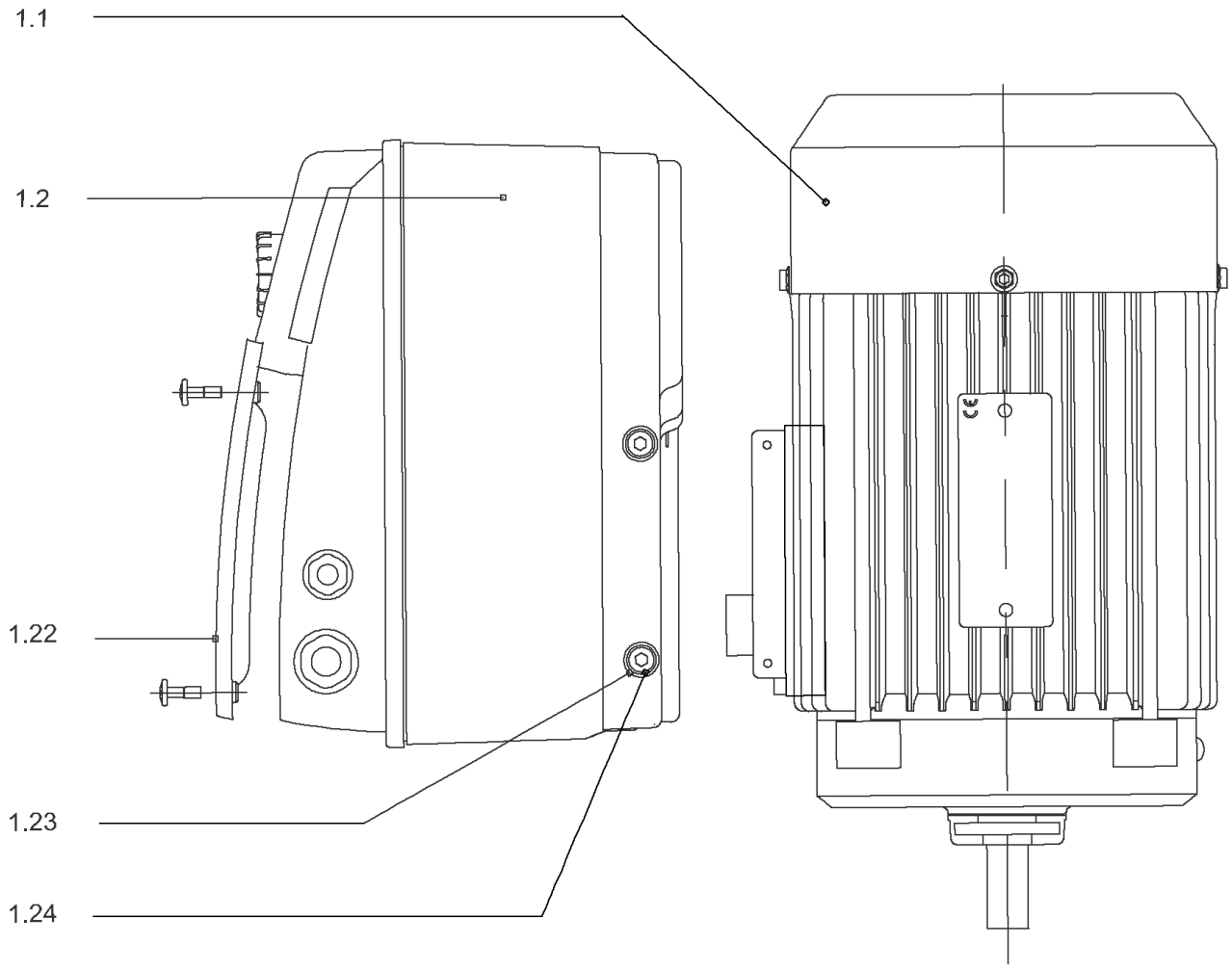
1.1
1.2
1.22
1.23
1.24

## DRIVE HELIX-VE2203-FF240-IE4-WE KIT

| Item | Article no. | Description | Quantity |
|---|---|---|---|
| 1.1 | 4207932 | MO.5.5/2/132FF240 3~380V 60Hz IE4 WE VP. | 1 |
| | | SPARE PARTS MOTOR:ON REQUEST | 1 |
| 1.2 | 4212634 | MODULE HELIX-VE2203-IE4-WE KIT | 1 |
| 1.22 | 2111344 | > MODULE COVER/GASKET TL5 KIT | 1 |
| 1.23 | 4215716 | > SCREW M5X16 DIN912 8.8 A2A (4pieces) VP. | 1 |
| 1.24 | 2057978 | > RONDELLE A5,3 DIN6797 FST ZN (4 PIECES) | 1 |

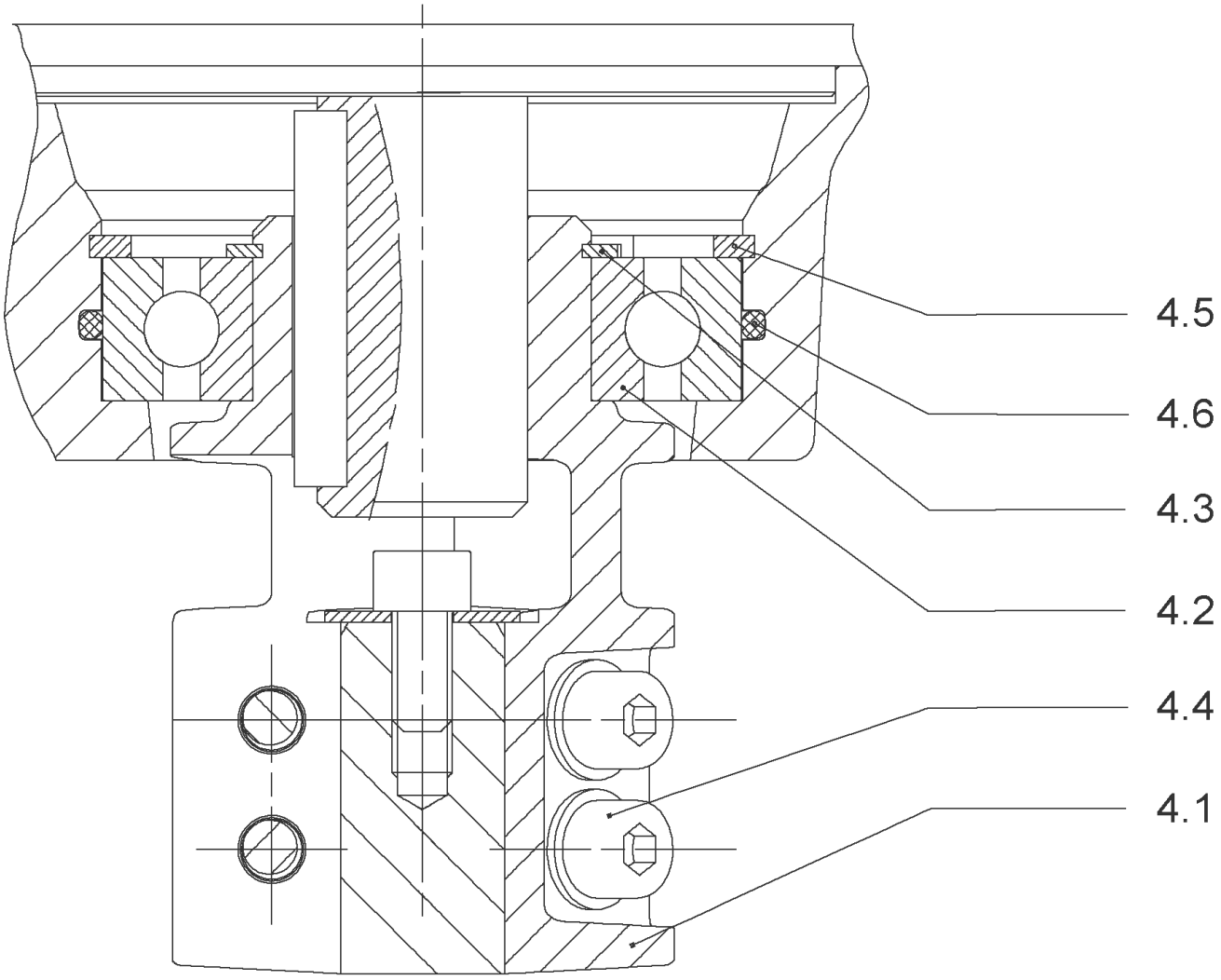
4.5
4.6
4.3
4.2
4.4
4.1

## COUPLING D.22XD.38 FF240T130 HELIX KIT (4186347)

| Item | Article no. | Description | Quantity |
|---|---|---|---|
| 4.1 | | COUPLING-VMI-D22xD38-FF265-MACHINED | 1 |
| 4.2 | 2131017 | BALL BEARING 6310/ZZ-C4(HT)VP. | 1 |
| 4.3 | 4234253 | CIRCLIP-FOR-SHAFT-D50x2 VP. | 1 |
| 4.4 | 4157726 | SCREW KIT M8X30 (4 PIECES) | 1 |
| 4.5 | 4234255 | CIRCLIPS 110X4 VP. | 1 |
| 4.6 | 4233944 | O-RING ID.110 VP. | 1 |
| | | NOMEL CONTACT WASHER 8x16x1,4 STEEL ZC | 1 |

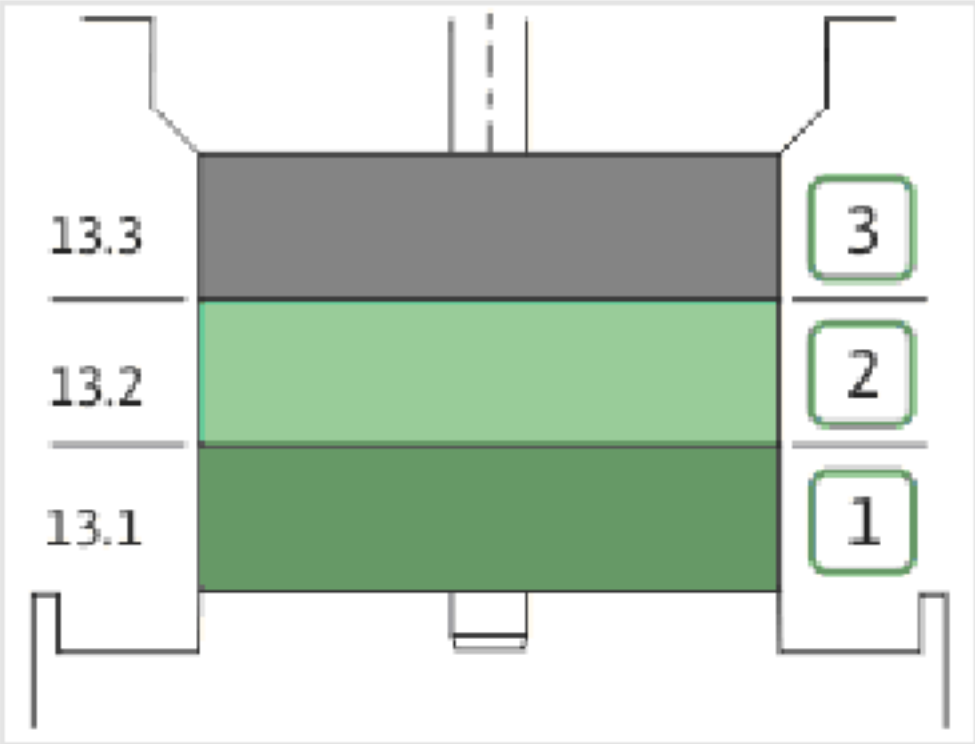
13.3
13.2
13.1
3
2
1

| Item | Article no. | Description | Quantity |
|---|---|---|---|
| 13.1 | 4157739 | FIRST STAGE HELIX 22 1.4307 KIT | 1 |
| | | > IMPELLER-H1-M+22-304 | 1 |
| | | > MACH.STG-CASING-WOGV-WNR-M+22-304 | 1 |
| 13.2 | 4157740 | BEARING STAGE HELIX 22 1.4307 KIT | 1 |
| | | > IMPELLER-H2-M+22-304 | 1 |
| | | > MACH.BEARING-STG-CASING-WNR-M+22-304 | 1 |
| | | > SHAFT-SLEEVE-D26xD22x16-CW | 1 |
| 13.3 | 4157743 | INTERMEDIATE STAGE HELIX 22 KIT | 1 |
| | | > MACH.STD-STG-CASING-WGV+NR-M+22-304 | 1 |
| | | > IMPELLER-H2-M+22-304 | 1 |

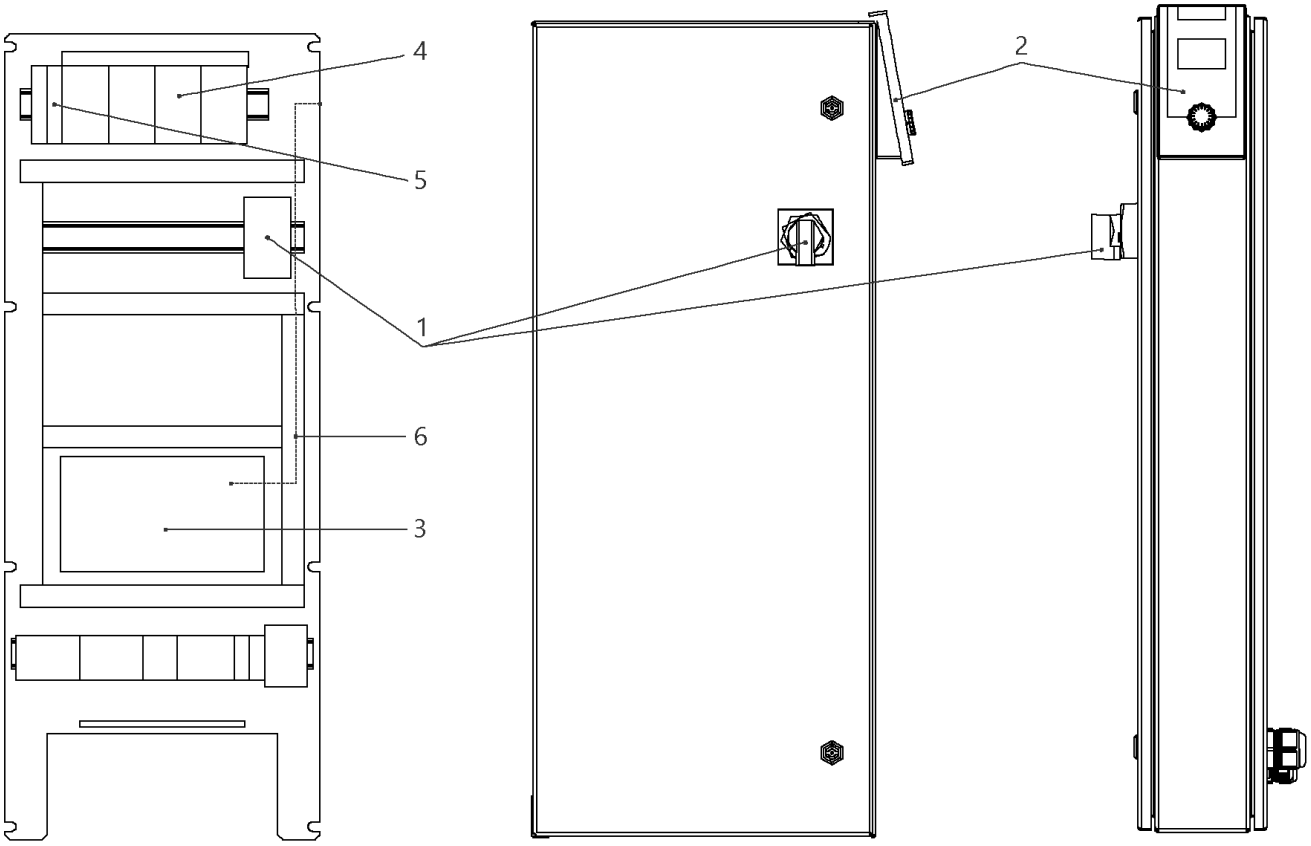
4
5
1
6
3
2

## W-CTRL-SCE-B-4x13A-T34-FM-ND2-AVC-PKG

| Item | Article no. | Description | Quantity |
|---|---|---|---|
| 1 | 2104477 | MAIN SWITCH OT80F3 L105 KIT | 1 |
| Note: TO / BIS / JUSQU'AU 30/06/2015 | | | |
| 1 | 2104473 | MAIN SWITCH OT63F3 L105 KIT | 1 |
| Note: FROM / AB / À PARTIR DU 01/07/2015 | | | |
| 2 | 4184784 | CONTROL PANEL HMI SC KIT | 1 |
| 2 | 4185259 | ASSEMBLY DISPLAY SC PKG VP. | 1 |
| Note: DISPLAY ALONE / PLATINE SEULE | | | |
| 3 | 4185257 | ASSEMBLY CPU SCe Booster VP. | 1 |
| 5 | 2046288 | CIRCUIT BREAKER S201 B16 | 1 |
| 4 | 2051217 | AUTOM.CIRCUIT BREAKER S203 B16 TO7,5kW | 1 |
| 6 | 4194956 | PATCH CABLE RJ45 CAT6 1,0M BLUE SC-PANEL | 1 |

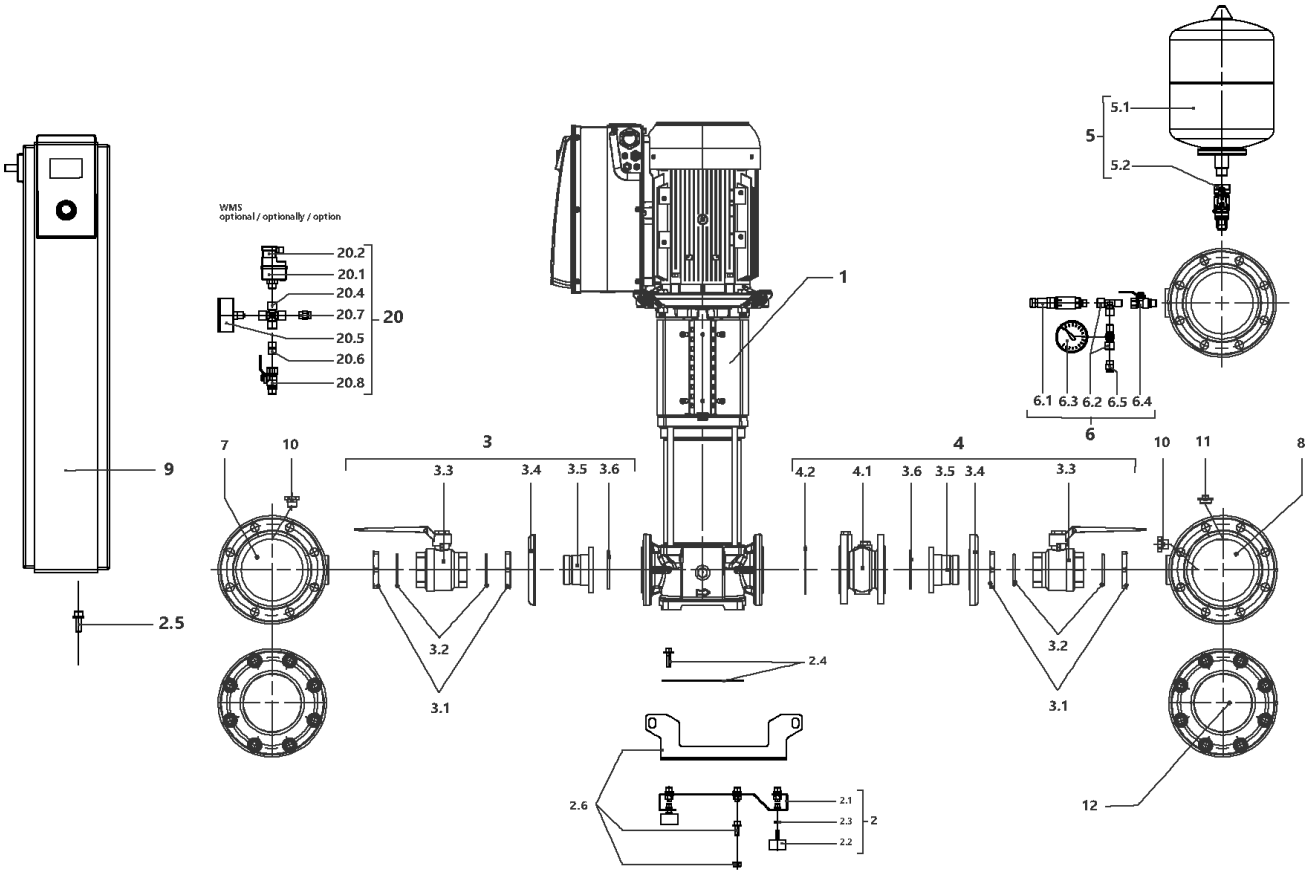
WMS
optional / optionally / option
20.2
20.1
20.4
20.7
20.5
20.6
20.8
20
1
5.1
5
5.2
6.1 6.3 6.2 6.5 6.4
6
9
7
10
3
3.3
3.4
3.5 3.6
4
4.2
4.1
3.6 3.5 3.4
3.3
10
11
8
2.5
3.2
3.1
3.2
3.1
2.4
2.6
2.1
2.3
2.2
2
12

## SiBoost Smart 4HELIX VE2204 (2540911)

| Item | Article no. | Description | Quantity |
|---|---|---|---|
| 1 | | HELIX VE2204-4/16/E/S-FF240 | 1 |
| 2 | 4203990 | BASE PLATE DE4 1450x420 M10 KIT | 1 |
| 2.1 | | > BASEPLATE_4x4/6/10/16V_E300_BOX_150 | 1 |
| 2.2 | 2027881 | > VIBRATION DAMPER M.10X20 D.70 | 1 |
| 2.3 | 2028281 | > NUT M10 DIN936 (ISO4035) 17H VZ | 1 |
| 2.4 | 4203978 | > HOLDER PUMP Siboost Helix 22 KIT | 1 |
| 2.5 | 4197084 | > HOLDER SWITCHBOX WILO Smart Control KIT | 1 |
| 2.6 | 4203979 | > LIFTING Siboost HELIX 22/36 KIT | 1 |
| 3 | 4203980 | SUCTION SIDE Siboost Helix 22 KIT | 1 |
| 3.1 | 2028689 | > NUT G2"X14 RG | 1 |
| 3.2 | 2028690 | > O-RING ID.53,35X5,33 EP851 | 1 |
| 3.2 | 2663977 | > BALL VALVE TYP250W IG.2" PN35 GIACOMINI | 1 |
| 3.4 | 2028285 | > LAPPED FLANGE DN50 1.4301 DIN2642P | 1 |
| 3.5 | 4203981 | > UNION INSERT DN50-G2" FLANGE AISI304 VP. | 1 |
| 3.6 | 2029911 | > O-RING ID.69,2X5,33 EPDM 70 SHR | 1 |
| 4 | 4203982 | DELIVERY SIDE Siboost Helix 22 KIT | 1 |
| 3.1 | 2028689 | > NUT G2"X14 RG | 1 |
| 3.2 | 2028690 | > O-RING ID.53,35X5,33 EP851 | 1 |
| 3.3 | 2663977 | > BALL VALVE TYP250W IG.2" PN35 GIACOMINI | 1 |
| 3.4 | 2028285 | > LAPPED FLANGE DN50 1.4301 DIN2642P | 1 |
| 3.5 | 4203981 | > UNION INSERT DN50-G2" FLANGE AISI304 VP. | 1 |
| 3.6 | 2029911 | > O-RING ID.69,2X5,33 EPDM 70 SHR | 1 |
| 4.1 | 2118590 | > NON RETURN VALVE DN50 PN16 VP. | 1 |
| 4.2 | 4202854 | > Flat gasket D61x107x2_DN50_PN25_FIBER VP | 1 |
| 5 | 4203983 | DIAPHREM TANK 8L/PN16 DIN4807/T5 KIT | 1 |
| 5.1 | 2045914 | > DIAPHREM TANK 8L TYP-DD 16BAR | 1 |
| 5.2 | 4189350 | > FLOW FITTING G3/4 FOR DIAPHRAG VESSEL VP | 1 |
| 6 | 4197076 | PRESSURE SENSOR/ GAUGE 0-16BAR KIT | 1 |
| 6.1 | 2085909 | > PRESS.SENSOR 1/4" 0-16BAR 4-20MA VP. | 1 |
| 6.2 | 4197077 | > T-PIECE 1/4" VP. | 1 |
| 6.3 | 2028692 | > PRESSURE GAUGE NG63-PN16-G1/4 | 1 |
| 6.4 | 2028291 | > BALL TAP R1/4" PN42 GIACOMINI R254DL | 1 |
| 6.5 | 2028691 | > BLOWGUN 1/4" MS 30BAR VP. | 1 |
| 7 | 4203991 | PIPE DE4 DN125-4x2"+2x1/4x1200 VP. | 1 |

| Item | Article no. | Description | Quantity |
|---|---|---|---|
| 8 | 4203992 | PIPE DE4 DN125-4x2"+2x1/4+1x3/4x1200 VP. | 1 |
| 9 | | W-CTRL-SCE-B-4x16A-T34-FM-ND2-AVC-PKG | 1 |
| 10 | 4197079 | PLUG G1/4"x10 AISI304 KIT | 1 |
| 11 | 2032654 | PLUG R3/4" MS VIEGA 1751 | 1 |
| 12 | 4203993 | BLIND-FLANGE DN125 PN10/16-A2 KIT | 1 |
| | 4203994 | > FLAT GASKET D.120/162X2 DN125 FIBRE VP. | 1 |
| | 2094573 | > NUT M16 DIN934 A2 1.4301 VP. | 1 |
| | 2107590 | > SCREW M16x70 DIN933 A2 (8 PIECES) | 1 |
| | 2094572 | > WASHER A17 DIN125 A2 1.4301 VP. | 1 |
| | | > FULL FLANGE ST.DN100 PN16 EN1092-1/05 A2 | 1 |
| | | > FLANGE COVER DN125 DIN 3443 FORM A | 1 |
| 20 | | ASSEMBLY WMS. DE-EB. +VP | 1 |
| 20.1 | 2028652 | > PRESSURE SWITCH PS3-ASR 1/(1,3) VP. | 1 |
| 20.2 | 2130983 | > PLUG PS3-415 WITH KABEL 1,5M 2NO VP. | 1 |
| 20.4 | 2028290 | > CROSSPIECE R1/4" MS-NICKEL | 1 |
| 20.5 | 2028687 | > PRESSURE GAUGE NG63 R1/4" HI.0-6BAR | 1 |
| 20.6 | 2054268 | > DUAL NIPPLE G1/4" x G1/4" MS VP. | 1 |
| 20.7 | 2028691 | > BLOWGUN 1/4" MS 30BAR VP. | 1 |
| 20.8 | 2028291 | > BALL TAP R1/4" PN42 GIACOMINI R254DL | 1 |

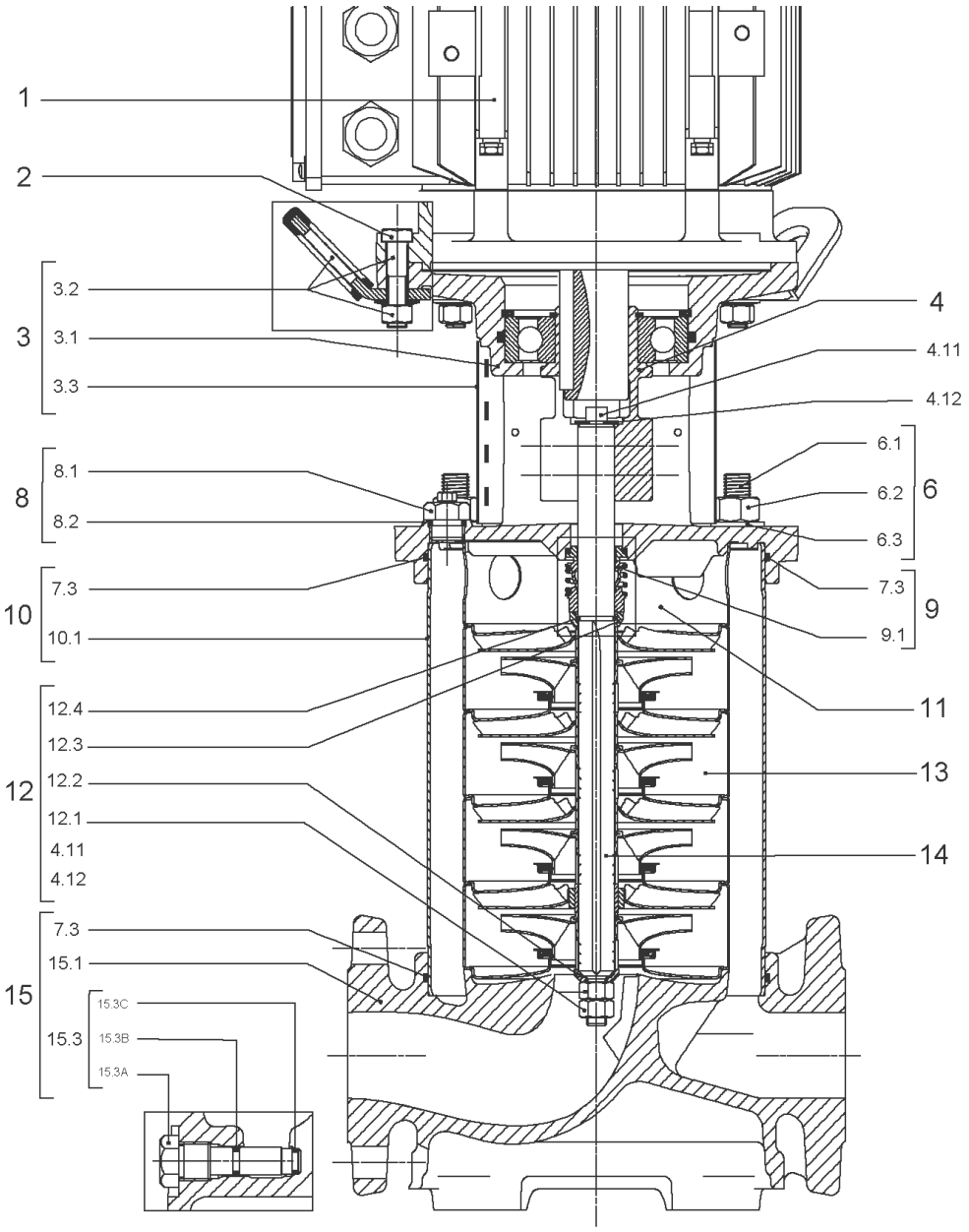
1
2
3
3.2
3.1
3.3
4
4.11
4.12
8
8.1
8.2
6
6.1
6.2
6.3
10
7.3
10.1
9
7.3
9.1
11
12
12.4
12.3
12.2
12.1
4.11
4.12
13
14
15
7.3
15.1
15.3
15.3C
15.3B
15.3A

| Item | Article no. | Description | Quantity |
|---|---|---|---|
| 1 | | DRIVE HELIX-VE2204-FF240-IE2-ATB KIT | 1 |
| Note: MOTOR BRAND ATB | | | |
| 1 | | DRIVE HELIX-VE2204-FF240-IE4-WE KIT | 1 |
| Note: MOTOR BRAND WILO ELEC | | | |
| | | SPARE PARTS MOTOR:ON REQUEST | 1 |
| 2 | 4174093 | SCREW M12X50 (4 PIECES) | 1 |
| 3 | 4186358 | LANTERN HELIX OPTI 8" FF240 KIT | 1 |
| 3.1 | | > M+8_LANTERN_ONE-PIECE_FF240_CATA_DWA | 1 |
| 3.2 | 4186346 | > EYELET CPL.FF240 HELIX (4 PIECES) | 1 |
| 3.3 | 4184853 | > COUPLING PROTECTOR FT HELIX 8'' KIT | 1 |
| 4 | 4186347 | COUPLING D.22XD.38 FF240T130 HELIX KIT | 1 |
| 6 | 4179581 | STUD BOLT M16X305.5 KIT | 1 |
| 6.1 | | > TIE BOLT M16-305.5x24x44-1.4057 | 1 |
| 6.2 | 4179562 | > NUT M16 8.8 ISO4032 (4 PIECES) | 1 |
| 6.3 | 4097852 | > WASHER-CS-16.4-32-2.8-NFE25-511-A2 | 1 |
| 8 | 4186377 | FILING/PURGING PLUG 304 HELIX KIT | 1 |
| 8.1 | | > FILLING/VENTING-PLUG-MVI8/10"-304 | 1 |
| 8.2 | 4032291 | > O-RING 17x3 EPDM KTW/WRC | 1 |
| 9 | 4192148 | SEAL-KIT-HELIX22-36-52 FIRST O/E | 1 |
| 7.3 | 4179571 | > O-RING HOUSING PIPE HELIX22/36/52 VP. | 1 |
| 9.1 | 4179573 | > M.SEAL.HELIX22-36-52 O/E VP. | 1 |
| 10 | 4181077 | HOUSING-PIPE D.204X264 1.4307 KIT | 1 |
| 7.3 | 4179571 | > O-RING HOUSING PIPE HELIX22/36/52 VP. | 1 |
| 10.1 | | > HOUSING-PIPE Ø204-M+2204/3603-304 | 1 |
| 11 | 4179143 | CENTERING STAGE-RETURN HELIX22 1.4307 VP | 1 |
| 12 | 4184856 | SHAFT EQUIPMENT HELIX 22 FIRST KIT | 1 |
| 13 | | HYDRAULIC HELIX V 2204 | 1 |
| 14 | 4186344 | SHAFT D.22X351 1.4057 VP. | 1 |
| 15 | 4186357 | EQUIPED HOUSING HELIX OPTI DN50 GJL KIT | 1 |
| 15.1 | | > PUMP CASING MONO.GJL M+8" DN50 DWA | 1 |
| 15.3 | 4106048 | > DRAIN/PRIMING PLUG EPDM HELIX FIRST KIT | 1 |
| 15.3A | | >> DRAIN AND PRIMING PLUG-VMI10"-304 | 1 |
| 15.3B | 4032293 | >> O-RING-10x3-EPDM-KTW/WRC | 1 |
| 15.3C | 4233957 | >> O-RING ID.9 EPDM VP. | 1 |

| Item | Article no. | Description | Quantity |
|---|---|---|---|
| 7.3 | 4179571 | > O-RING HOUSING PIPE HELIX22/36/52 VP. | 1 |

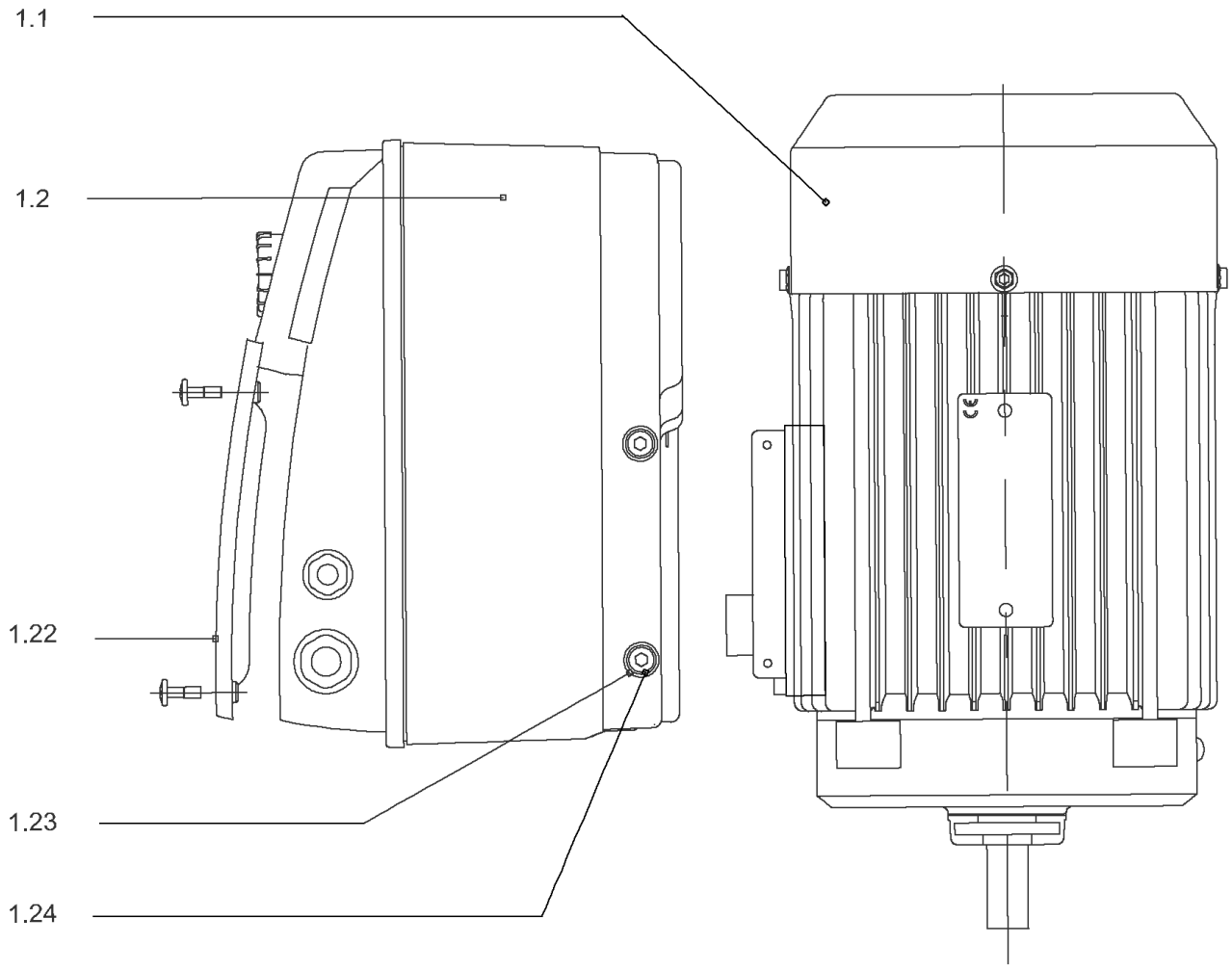
1.1
1.2
1.22
1.23
1.24

## DRIVE HELIX-VE2204-FF240-IE2-ATB KIT

| Item | Article no. | Description | Quantity |
|---|---|---|---|
| 1.1 | | MOTOR 7,5/2/132 FF240 3~380V 60HZ IE2 VP | 1 |
| Note: no longer available/nicht mehrlieferbar/n'est plus disponible | | | |
| | | SPARE PARTS MOTOR:ON REQUEST | 1 |
| 1.2 | 4144857 | MODULE HELIX-VE2204-IE2-ATB KIT | 1 |
| 1.22 | 2111344 | > MODULE COVER/GASKET TL5 KIT | 1 |
| 1.23 | 4215716 | > SCREW M5X16 DIN912 8.8 A2A (4pieces) VP. | 1 |
| 1.24 | 2057978 | > RONDELLE A5,3 DIN6797 FST ZN (4 PIECES) | 1 |

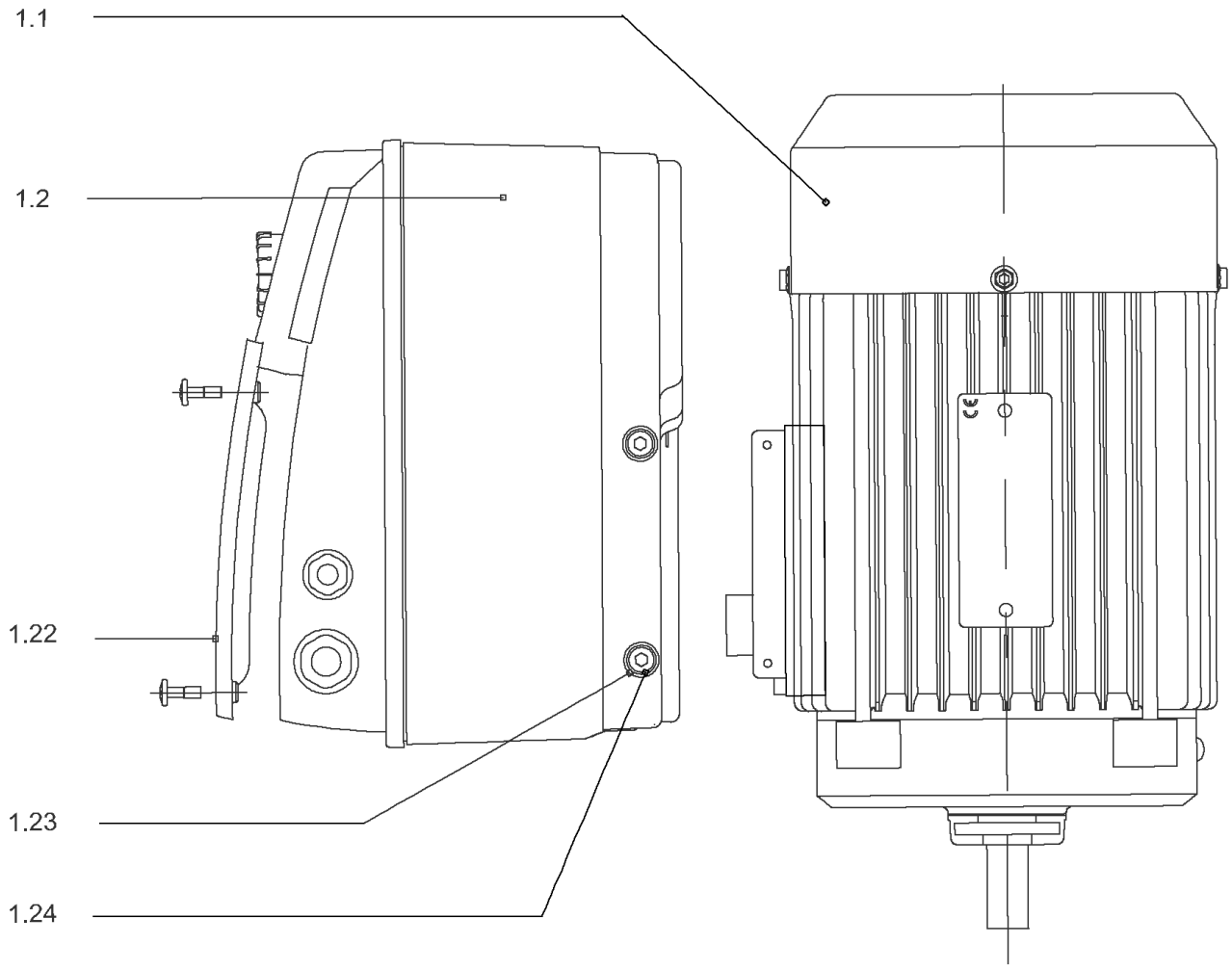
1.1
1.2
1.22
1.23
1.24

## DRIVE HELIX-VE2204-FF240-IE4-WE KIT

| Item | Article no. | Description | Quantity |
|---|---|---|---|
| 1.1 | 4207940 | MO.7.5/2/132FF240 3~380V 60Hz IE4 WE VP. | 1 |
| | | SPARE PARTS MOTOR:ON REQUEST | 1 |
| 1.2 | 4212639 | MODULE HELIX-VE2204-IE4-WE KIT | 1 |
| 1.22 | 2111344 | > MODULE COVER/GASKET TL5 KIT | 1 |
| 1.23 | 4215716 | > SCREW M5X16 DIN912 8.8 A2A (4pieces) VP. | 1 |
| 1.24 | 2057978 | > RONDELLE A5,3 DIN6797 FST ZN (4 PIECES) | 1 |

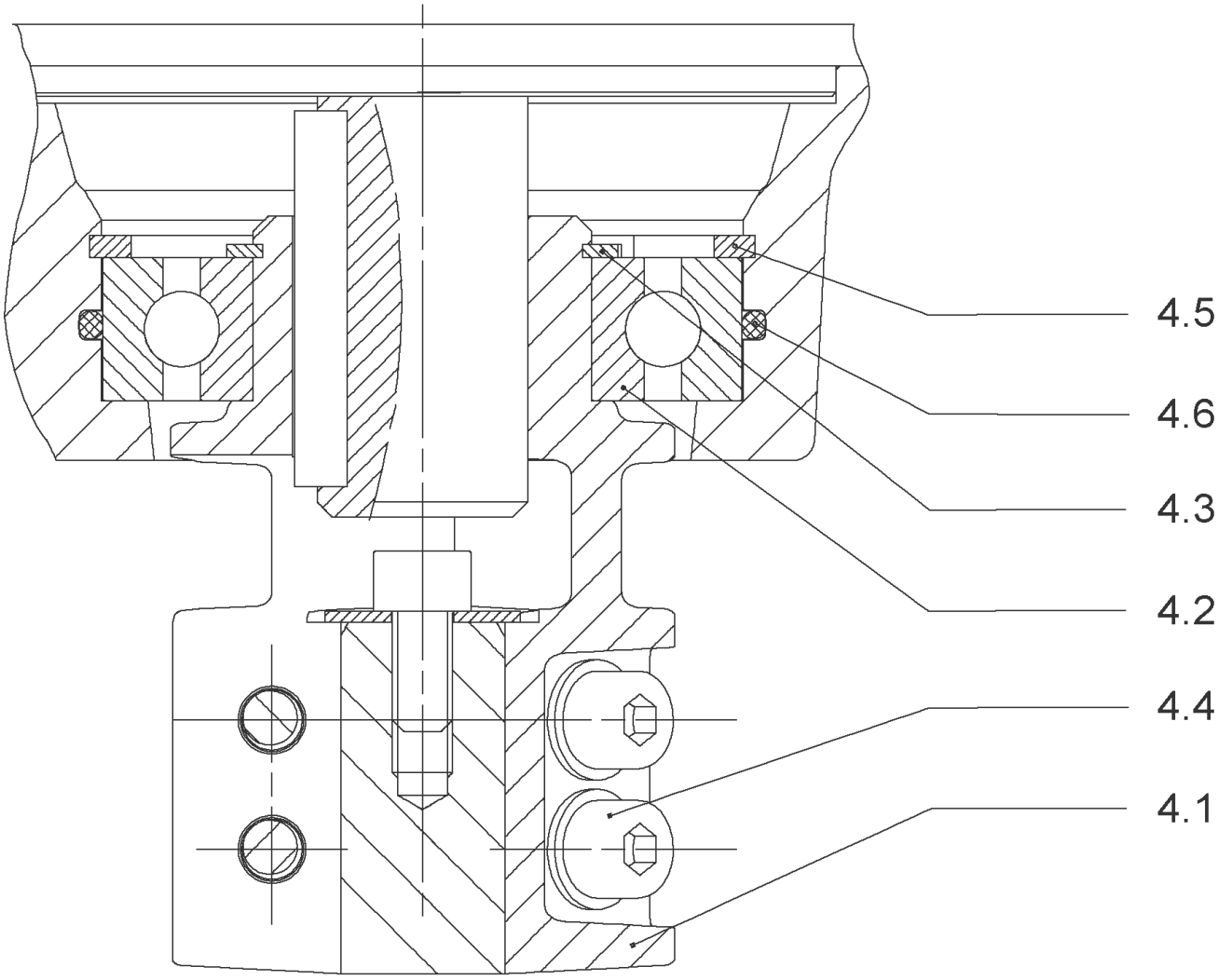
4.5
4.6
4.3
4.2
4.4
4.1

## COUPLING D.22XD.38 FF240T130 HELIX KIT (4186347)

| Item | Article no. | Description | Quantity |
|---|---|---|---|
| 4.1 | | COUPLING-VMI-D22xD38-FF265-MACHINED | 1 |
| 4.2 | 2131017 | BALL BEARING 6310/ZZ-C4(HT)VP. | 1 |
| 4.3 | 4234253 | CIRCLIP-FOR-SHAFT-D50x2 VP. | 1 |
| 4.4 | 4157726 | SCREW KIT M8X30 (4 PIECES) | 1 |
| 4.5 | 4234255 | CIRCLIPS 110X4 VP. | 1 |
| 4.6 | 4233944 | O-RING ID.110 VP. | 1 |
| | | NOMEL CONTACT WASHER 8x16x1,4 STEEL ZC | 1 |

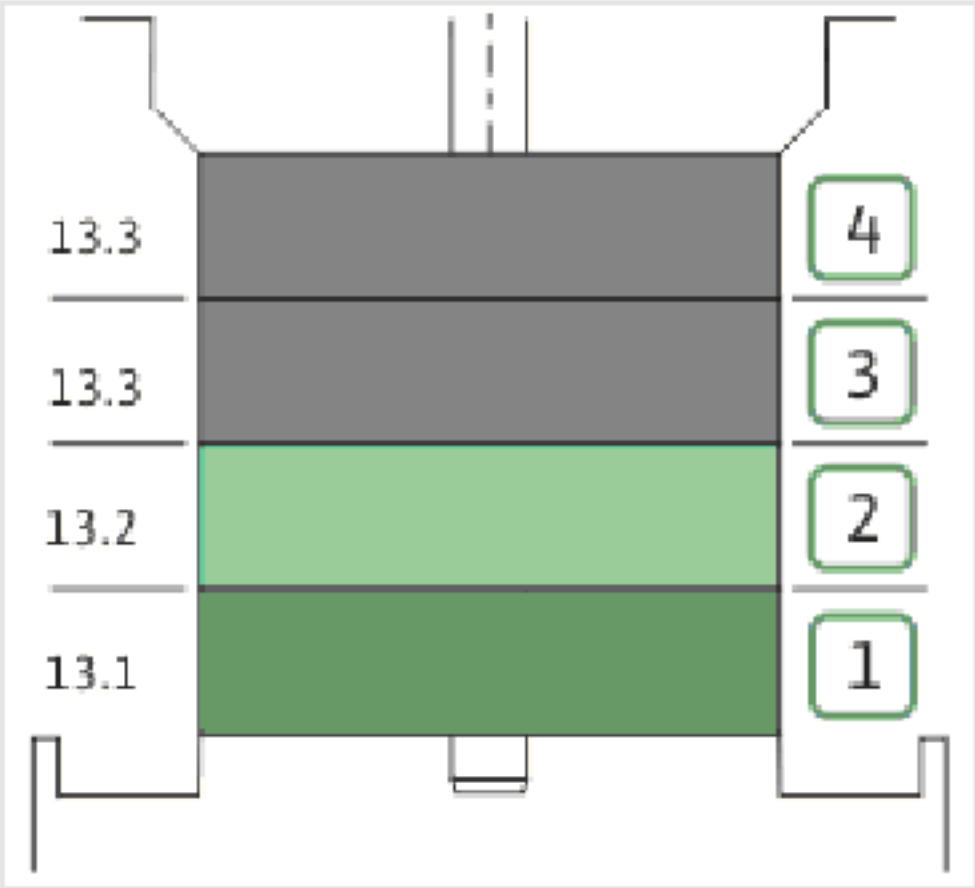
13.3
13.3
13.2
13.1
4
3
2
1

| Item | Article no. | Description | Quantity |
|---|---|---|---|
| 13.1 | 4157739 | FIRST STAGE HELIX 22 1.4307 KIT | 1 |
| | | > IMPELLER-H1-M+22-304 | 1 |
| | | > MACH.STG-CASING-WOGV-WNR-M+22-304 | 1 |
| 13.2 | 4157740 | BEARING STAGE HELIX 22 1.4307 KIT | 1 |
| | | > IMPELLER-H2-M+22-304 | 1 |
| | | > MACH.BEARING-STG-CASING-WNR-M+22-304 | 1 |
| | | > SHAFT-SLEEVE-D26xD22x16-CW | 1 |
| 13.3 | 4157743 | INTERMEDIATE STAGE HELIX 22 KIT | 1 |
| | | > MACH.STD-STG-CASING-WGV+NR-M+22-304 | 1 |
| | | > IMPELLER-H2-M+22-304 | 1 |

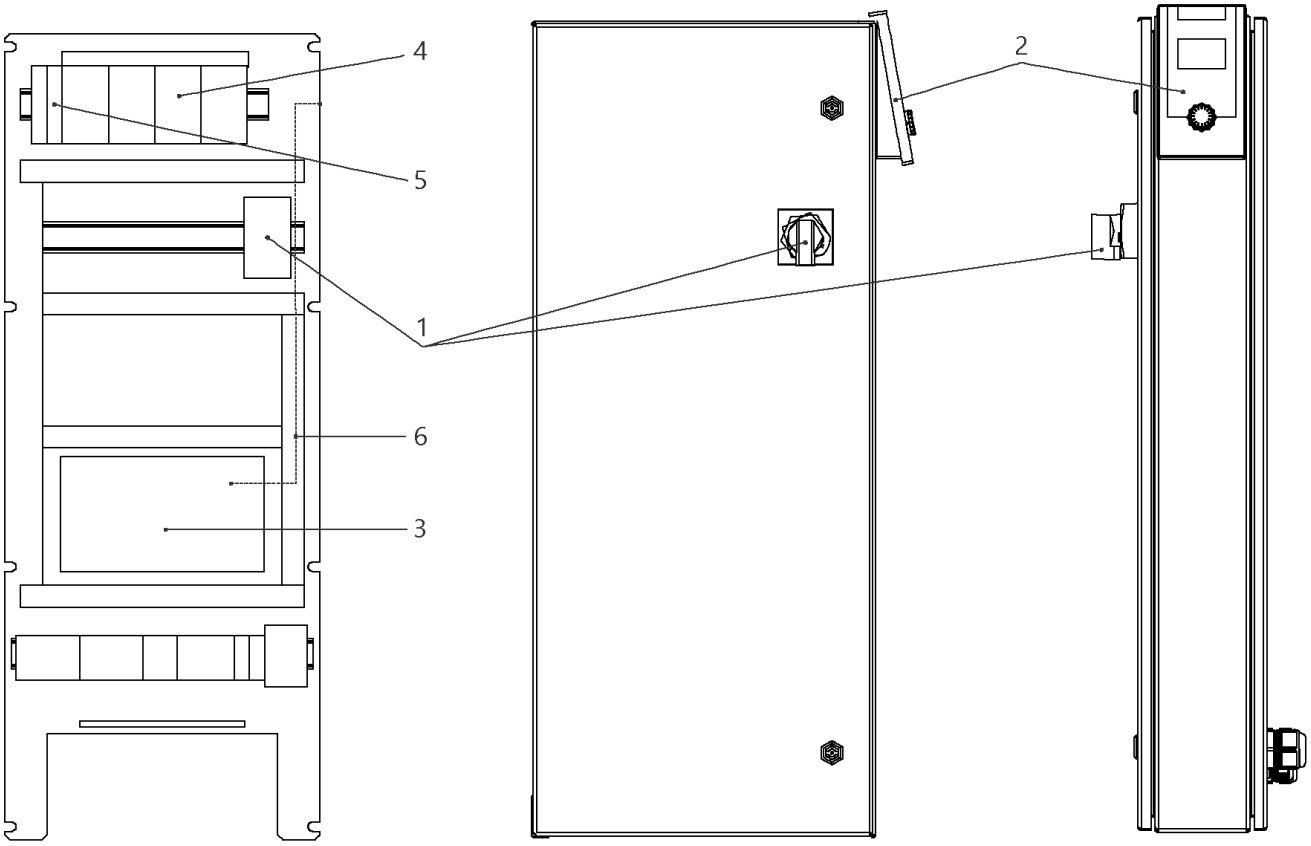
4
5
1
6
3
2

## W-CTRL-SCE-B-4x16A-T34-FM-ND2-AVC-PKG

| Item | Article no. | Description | Quantity |
|---|---|---|---|
| 1 | 2104477 | MAIN SWITCH OT80F3 L105 KIT | 1 |
| 2 | 4184784 | CONTROL PANEL HMI SC KIT | 1 |
| 2 | 4185259 | ASSEMBLY DISPLAY SC PKG VP. | 1 |
| Note: DISPLAY ALONE / PLATINE SEULE | | | |
| 3 | 4185257 | ASSEMBLY CPU SCe Booster VP. | 1 |
| 4 | 4197832 | AUTOMATIC CIRCUIT BREAKER S203 B20 VP. | 1 |
| 5 | 2046288 | CIRCUIT BREAKER S201 B16 | 1 |
| 6 | 4194956 | PATCH CABLE RJ45 CAT6 1,0M BLUE SC-PANEL | 1 |

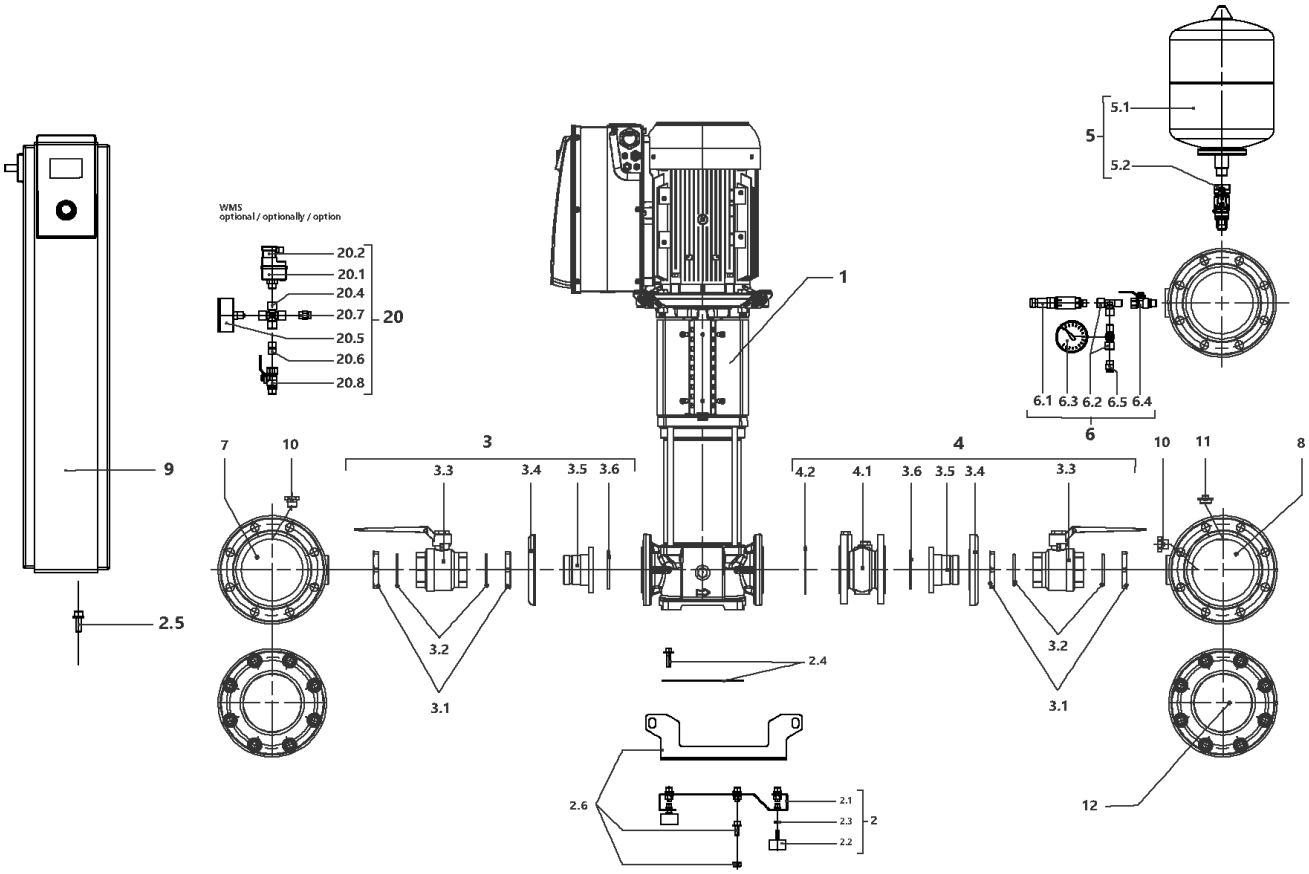
WMS
optional / optionally / option
20.2
20.1
20.4
20.7
20.5
20.6
20.8
20
1
5.1
5
5.2
6.1 6.3 6.2 6.5 6.4
6
9
7
10
3
3.3
3.4
3.5 3.6
4
4.2
4.1
3.6 3.5 3.4
3.3
10
11
8
2.5
3.2
3.1
2.4
3.2
3.1
2.6
2.1
2.3
2.2
2
12

## SiBoost Smart 4HELIX VE2205 (2540912)

| Item | Article no. | Description | Quantity |
|---|---|---|---|
| 1 | | HELIX VE2205-4/16/E/KS/2G | 1 |
| 2 | 4204005 | BASE PLATE DE4 2250x420 M10 | 1 |
| 2.1 | | > BASE_FR_4x22/36/52V_E500_L400_BOX150-250 | 1 |
| 2.2 | 2027881 | > VIBRATION DAMPER M.10X20 D.70 | 1 |
| 2.3 | 2028281 | > NUT M10 DIN936 (ISO4035) 17H VZ | 1 |
| 2.4 | 4203978 | > HOLDER PUMP Siboost Helix 22 KIT | 1 |
| 2.5 | 4197084 | > HOLDER SWITCHBOX WILO Smart Control KIT | 1 |
| 2.6 | 4203979 | > LIFTING Siboost HELIX 22/36 KIT | 1 |
| 3 | 4203980 | SUCTION SIDE Siboost Helix 22 KIT | 1 |
| 3.1 | 2028689 | > NUT G2"X14 RG | 1 |
| 3.2 | 2028690 | > O-RING ID.53,35X5,33 EP851 | 1 |
| 3.2 | 2663977 | > BALL VALVE TYP250W IG.2" PN35 GIACOMINI | 1 |
| 3.4 | 2028285 | > LAPPED FLANGE DN50 1.4301 DIN2642P | 1 |
| 3.5 | 4203981 | > UNION INSERT DN50-G2" FLANGE AISI304 VP. | 1 |
| 3.6 | 2029911 | > O-RING ID.69,2X5,33 EPDM 70 SHR | 1 |
| 4 | 4203982 | DELIVERY SIDE Siboost Helix 22 KIT | 1 |
| 3.1 | 2028689 | > NUT G2"X14 RG | 1 |
| 3.2 | 2028690 | > O-RING ID.53,35X5,33 EP851 | 1 |
| 3.3 | 2663977 | > BALL VALVE TYP250W IG.2" PN35 GIACOMINI | 1 |
| 3.4 | 2028285 | > LAPPED FLANGE DN50 1.4301 DIN2642P | 1 |
| 3.5 | 4203981 | > UNION INSERT DN50-G2" FLANGE AISI304 VP. | 1 |
| 3.6 | 2029911 | > O-RING ID.69,2X5,33 EPDM 70 SHR | 1 |
| 4.1 | 2118590 | > NON RETURN VALVE DN50 PN16 VP. | 1 |
| 4.2 | 4202854 | > Flat gasket D61x107x2_DN50_PN25_FIBER VP | 1 |
| 5 | 4203983 | DIAPHREM TANK 8L/PN16 DIN4807/T5 KIT | 1 |
| 5.1 | 2045914 | > DIAPHREM TANK 8L TYP-DD 16BAR | 1 |
| 5.2 | 4189350 | > FLOW FITTING G3/4 FOR DIAPHRAG VESSEL VP | 1 |
| 6 | 4197076 | PRESSURE SENSOR/ GAUGE 0-16BAR KIT | 1 |
| 6.1 | 2085909 | > PRESS.SENSOR 1/4" 0-16BAR 4-20MA VP. | 1 |
| 6.2 | 4197077 | > T-PIECE 1/4" VP. | 1 |
| 6.3 | 2028692 | > PRESSURE GAUGE NG63-PN16-G1/4 | 1 |
| 6.4 | 2028291 | > BALL TAP R1/4" PN42 GIACOMINI R254DL | 1 |
| 6.5 | 2028691 | > BLOWGUN 1/4" MS 30BAR VP. | 1 |
| 7 | 4204006 | PIPE DE4 DN125-4x2"+2x1/4x2000 VP. | 1 |

| Item | Article no. | Description | Quantity |
|---|---|---|---|
| 8 | 4204007 | PIPE DE4 DN125-4x2"+2x1/4+1x3/4x2000 VP. | 1 |
| 9 | | W-CTRL-SCE-B-4x24A-T34-FM-ND4-AVC-PKG | 1 |
| 10 | 4197079 | PLUG G1/4"x10 AISI304 KIT | 1 |
| 11 | 2032654 | PLUG R3/4" MS VIEGA 1751 | 1 |
| 12 | 4203993 | BLIND-FLANGE DN125 PN10/16-A2 KIT | 1 |
| | 4203994 | > FLAT GASKET D.120/162X2 DN125 FIBRE VP. | 1 |
| | 2094573 | > NUT M16 DIN934 A2 1.4301 VP. | 1 |
| | 2107590 | > SCREW M16x70 DIN933 A2 (8 PIECES) | 1 |
| | 2094572 | > WASHER A17 DIN125 A2 1.4301 VP. | 1 |
| | | > FULL FLANGE ST.DN100 PN16 EN1092-1/05 A2 | 1 |
| | | > FLANGE COVER DN125 DIN 3443 FORM A | 1 |
| 20 | | ASSEMBLY WMS. DE-EB. +VP | 1 |
| 20.1 | 2028652 | > PRESSURE SWITCH PS3-ASR 1/(1,3) VP. | 1 |
| 20.2 | 2130983 | > PLUG PS3-415 WITH KABEL 1,5M 2NO VP. | 1 |
| 20.4 | 2028290 | > CROSSPIECE R1/4" MS-NICKEL | 1 |
| 20.5 | 2028687 | > PRESSURE GAUGE NG63 R1/4" HI.0-6BAR | 1 |
| 20.6 | 2054268 | > DUAL NIPPLE G1/4" x G1/4" MS VP. | 1 |
| 20.7 | 2028691 | > BLOWGUN 1/4" MS 30BAR VP. | 1 |
| 20.8 | 2028291 | > BALL TAP R1/4" PN42 GIACOMINI R254DL | 1 |

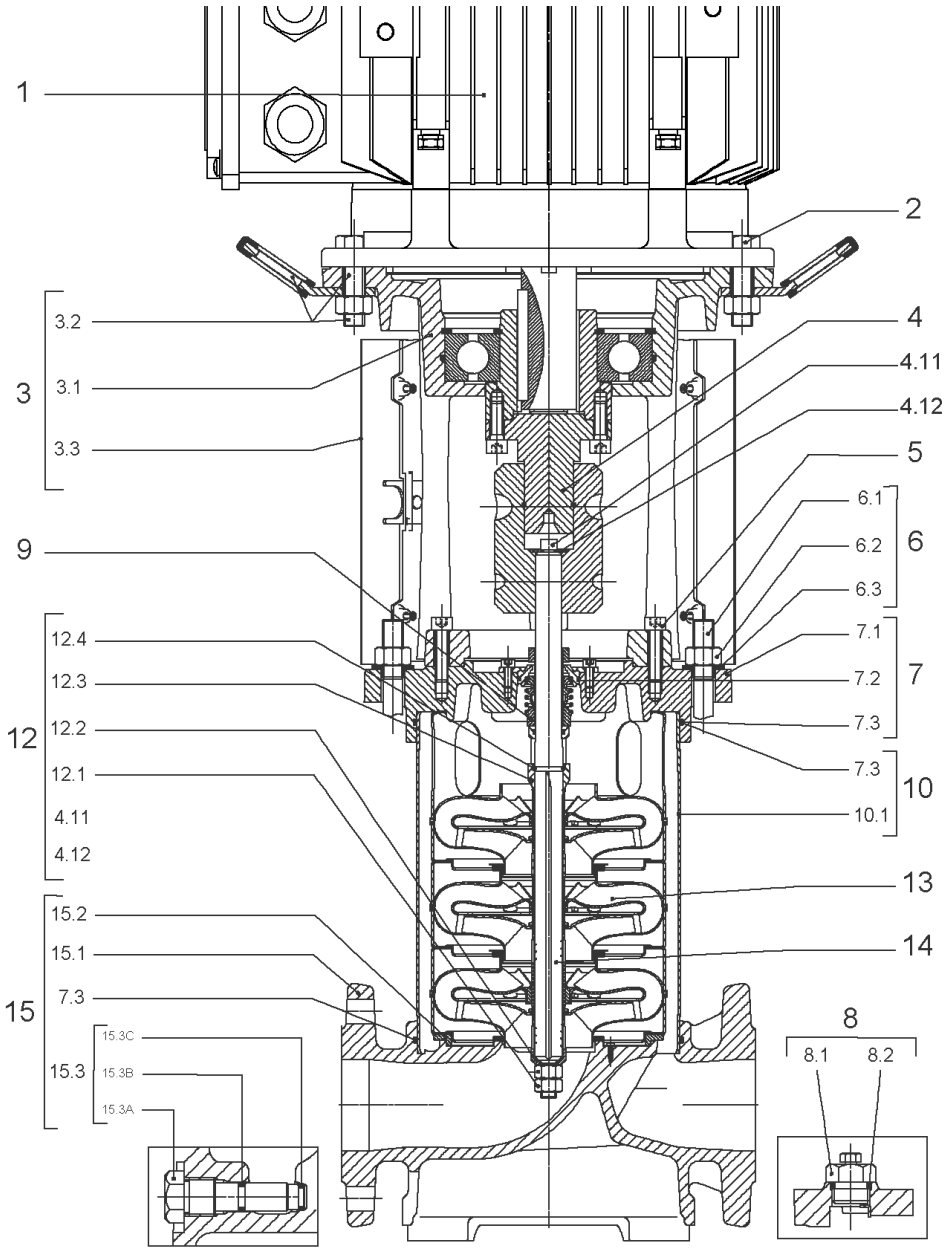
1
2
3
3.2
3.1
3.3
4
4.11
4.12
5
6
6.1
6.2
6.3
9
7
7.1
7.2
7.3
12
12.4
12.3
12.2
12.1
4.11
4.12
10
7.3
10.1
13
14
15
15.2
15.1
7.3
15.3
15.3C
15.3B
15.3A
8
8.1
8.2

## HELIX VE2205-4/16/E/KS/2G

| Item | Article no. | Description | Quantity |
|---|---|---|---|
| 1 | | DRIVE HELIX VE2205-IE2-ARC KIT | 1 |
| Note: no longer available/nicht mehrlieferbar/n'est plus disponible | | | |
| 1 | 4218536 | DRIVE HELIX VE2205-IE4-WEG KIT | 1 |
| Note: MOTOR BRAND WEG | | | |
| 2 | 4179586 | SCREW M16X60 (4 PIECES) | 1 |
| 3 | 4157721 | LANTERN HELIX 22/36 FF300 BB6312 KIT | 1 |
| 3.1 | | > LANTERN FF300 M+ GJL MACHINED+CATA 6312 | 1 |
| 3.2 | 4179589 | > EYELET CPL.FF300 HELIX(4 PIECES) | 1 |
| 3.3 | 4143969 | > COUPLING PROTECT HELIX FF KIT | 1 |
| 4 | 4143966 | COUPLING D.20XD.38 FF300 KIT | 1 |
| 5 | 4157725 | SCREW M10X40 (4 PIECES) | 1 |
| 6 | 4181164 | STUD BOLT M16X382 KIT | 1 |
| 6.1 | | > TIE BOLT M16-382x24x44-1.4057 | 1 |
| 6.2 | 4179562 | > NUT M16 8.8 ISO4032 (4 PIECES) | 1 |
| 6.3 | 4097852 | > WASHER-CS-16.4-32-2.8-NFE25-511-A2 | 1 |
| 7 | 4179565 | END SHIELD HELIX 8'' EPDM KIT | 1 |
| 7.1 | | > END SHIELD M+ GJL MACHINED+CATA | 1 |
| 7.2 | 4179564 | > O-RING D.42.52x2.62 EPDM VP. | 1 |
| 7.3 | 4179571 | > O-RING HOUSING PIPE HELIX22/36/52 VP. | 1 |
| 8 | 4186377 | FILING/PURGING PLUG 304 HELIX KIT | 1 |
| 8.1 | | > FILLING/VENTING-PLUG-MVI8/10"-304 | 1 |
| 8.2 | 4032291 | > O-RING 17x3 EPDM KTW/WRC | 1 |
| 9 | 4143973 | CARTRIDGE HELIX22-36-52 O/E KIT | 1 |
| 10 | 4181165 | HOUSING PIPE D.204X314 1.4301 KIT | 1 |
| 7.3 | 4179571 | > O-RING HOUSING PIPE HELIX22/36/52 VP. | 1 |
| 10.1 | | > HOUSING-PIPE Ø204-M+2205-304 | 1 |
| 11 | 4179143 | CENTERING STAGE-RETURN HELIX22 1.4307 VP | 1 |
| 12 | 4143967 | SHAFT EQUIPMENT HELIX V KIT | 1 |
| 13 | | HYDRAULIC HELIX V 2205 | 1 |
| 14 | 2114267 | SHAFT D.22X454 1.4057 VP. | 1 |
| 15 | 4186357 | EQUIPED HOUSING HELIX OPTI DN50 GJL KIT | 1 |
| 15.1 | | > PUMP CASING MONO.GJL M+8" DN50 DWA | 1 |
| 15.3 | 4106048 | > DRAIN/PRIMING PLUG EPDM HELIX FIRST KIT | 1 |
| 15.3A | | >> DRAIN AND PRIMING PLUG-VMI10"-304 | 1 |

| Item | Article no. | Description | Quantity |
|---|---|---|---|
| 15.3B | 4032293 | >> O-RING-10x3-EPDM-KTW/WRC | 1 |
| 15.3C | 4233957 | >> O-RING ID.9 EPDM VP. | 1 |
| 7.3 | 4179571 | > O-RING HOUSING PIPE HELIX22/36/52 VP. | 1 |

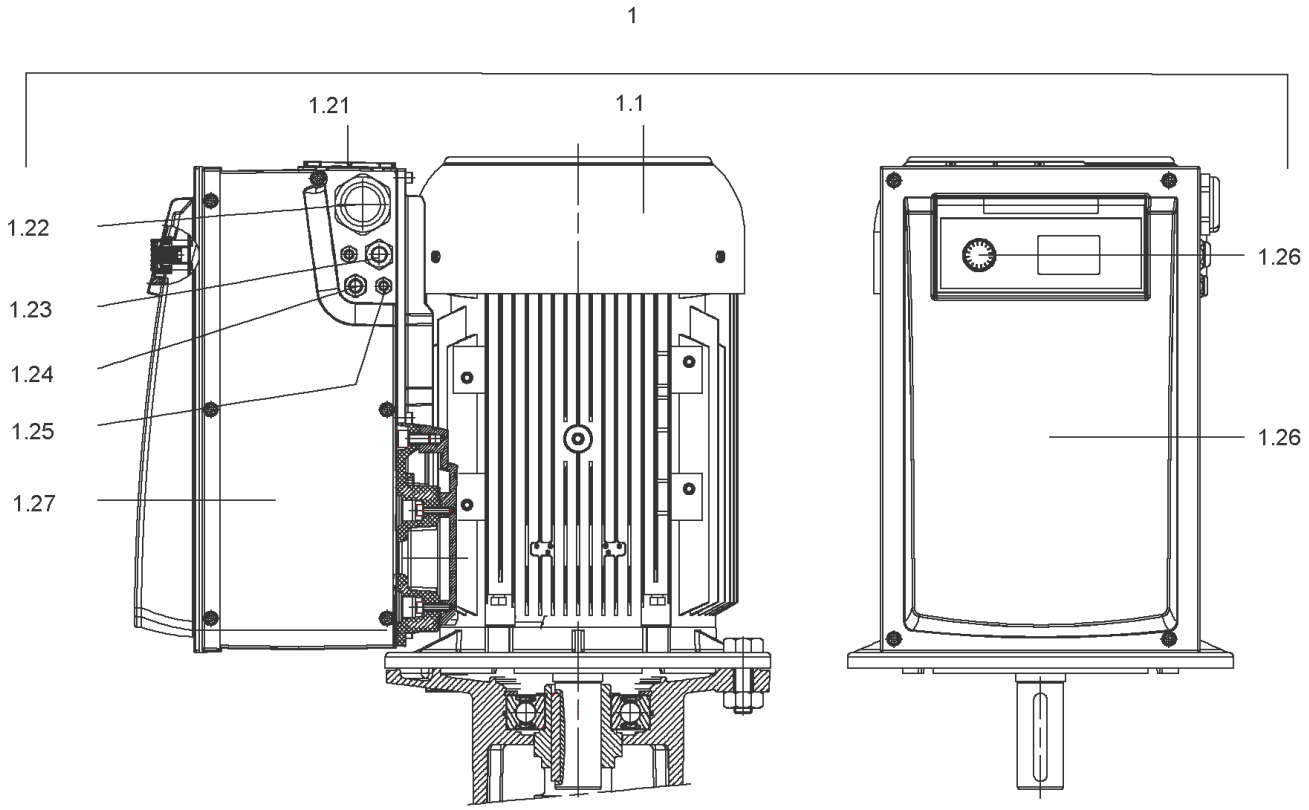
1
1.21
1.1
1.22
1.23
1.24
1.25
1.27
1.26
1.26

## DRIVE HELIX VE2205-IE2-ARC KIT

| Item | Article no. | Description | Quantity |
|---|---|---|---|
| 1.1 | | M11-2T638P55V1-160F300-N42-IE2 | 1 |
| | | SPARE PARTS MOTOR:ON REQUEST | 1 |
| 1.21 | 2132102 | FAN SMALL TL6/7 FF KIT | 1 |
| 1.25 | 2132097 | CABLE CONNECTION M12 TL6/7 FF VP. | 1 |
| 1.24 | 2132098 | CABLE CONNECTION M16 TL6/7 FF VP. | 1 |
| 1.23 | 2132099 | CABLE CONNECTION M20 TL6/7 FF VP. | 1 |
| 1.22 | 2132100 | CABLE CONNECTION SMALL M40 TL6/7 FF VP. | 1 |
| 1.27 | 2132104 | COVER SIDE TL6/7 FF CPL.VP. | 1 |
| 1.26 | 2132452 | MODULE COVER/BUTTON TL6/7 FF VP. | 1 |

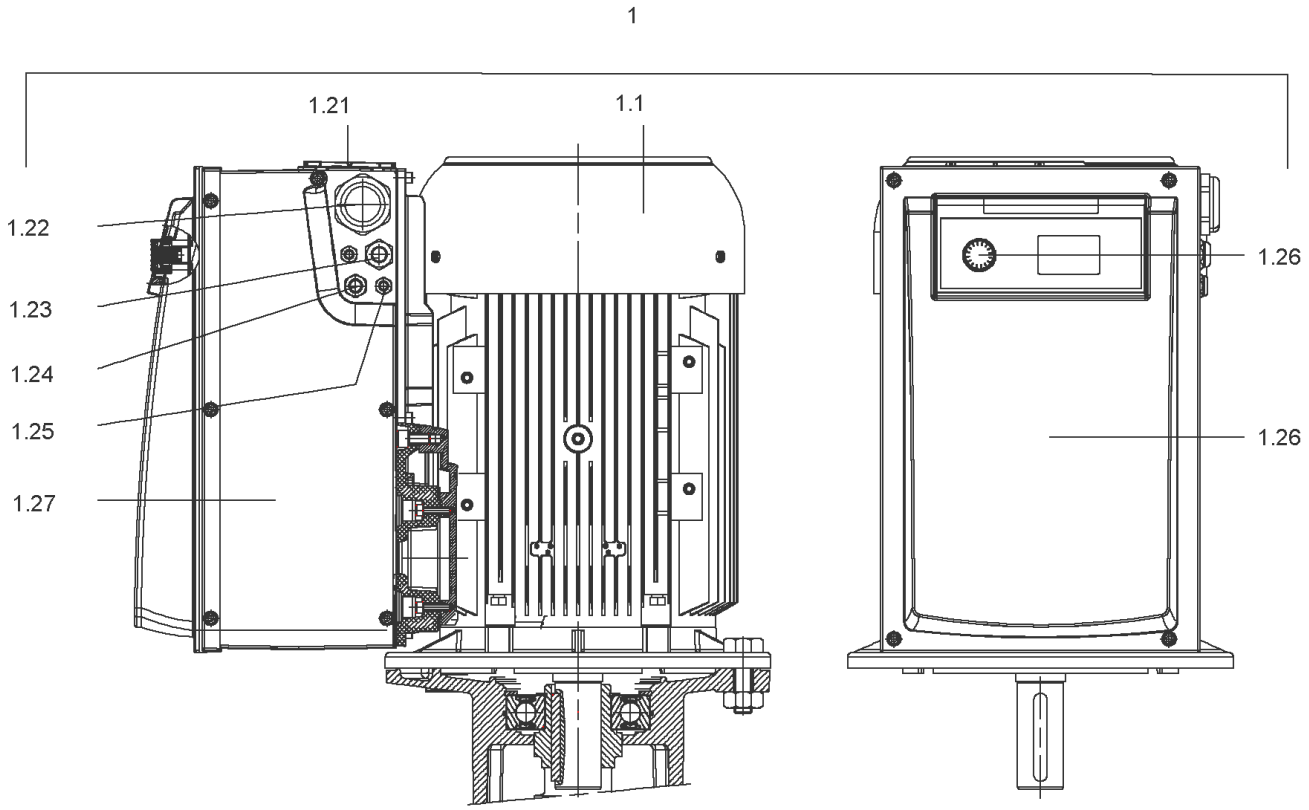
1
1.21
1.1
1.22
1.23
1.24
1.25
1.27
1.26
1.26

## DRIVE HELIX VE2205-IE4-WEG KIT (4218536)

| Item | Article no. | Description | Quantity |
|---|---|---|---|
| 1.1 | | M11-2T638P55V1-160F30-N42-ADAPT-IE4-WEG | 1 |
| | | SPARE PARTS MOTOR:ON REQUEST | 1 |
| 1.21 | 2132102 | FAN SMALL TL6/7 FF KIT | 1 |
| 1.25 | 2132097 | CABLE CONNECTION M12 TL6/7 FF VP. | 1 |
| 1.24 | 2132098 | CABLE CONNECTION M16 TL6/7 FF VP. | 1 |
| 1.23 | 2132099 | CABLE CONNECTION M20 TL6/7 FF VP. | 1 |
| 1.22 | 2132100 | CABLE CONNECTION SMALL M40 TL6/7 FF VP. | 1 |
| 1.27 | 2132104 | COVER SIDE TL6/7 FF CPL.VP. | 1 |
| 1.26 | 2132452 | MODULE COVER/BUTTON TL6/7 FF VP. | 1 |

## COUPLING D.20XD.38 FF300 KIT (4143966)

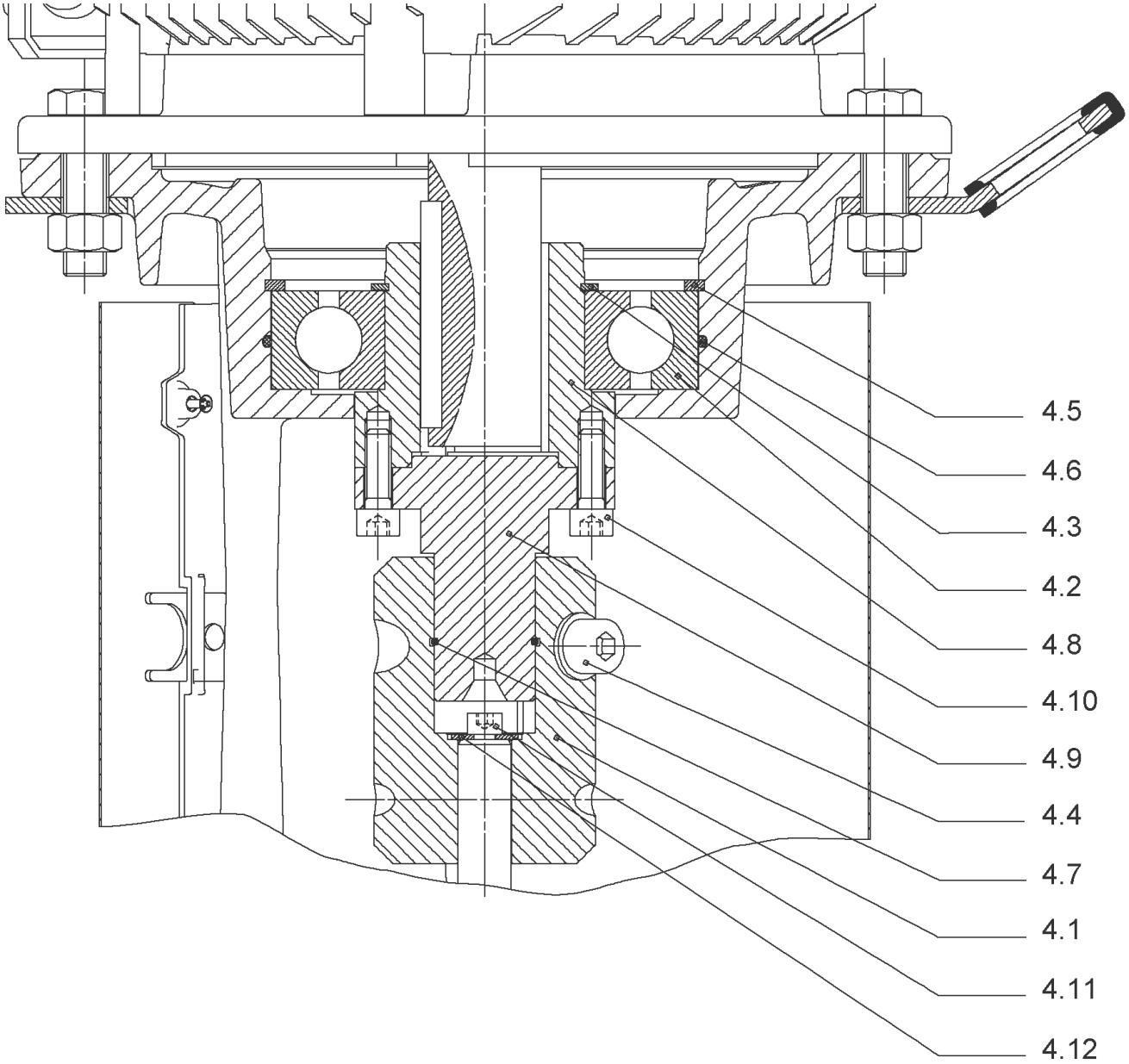

## COUPLING D.20XD.38 FF300 KIT (4143966)

| Item | Article no. | Description | Quantity |
|---|---|---|---|
| 4.1 | 4179590 | COUPLING 2 PARTS D.20XD.38XL115 VP. | 1 |
| 4.2 | 2123699 | BALL BEARING 6312/2Z-C4 (HT) VP. | 1 |
| 4.3 | 63428 | CIRCLIP-FOR-SHAFT-D60x2 | 1 |
| 4.4 | 2130991 | SCREW M12X30 ISO4762 8.8 ZN(4 PIECES) | 1 |
| 4.5 | 4032277 | CIRCLIP-HOLE-130x4 | 1 |
| 4.6 | 4006725 | O-RING ID.132,94x3,53 NBR70SR | 1 |
| 4.7 | 2130992 | RETAINING RING D.35xD.2,5 DIN7993 VP. | 1 |
| 4.8 | 4179591 | HUB D.42xD.60 VP. | 1 |
| 4.9 | 2130994 | SPACER D.38XD.55 VP. | 1 |
| 4.10 | 4094462 | SCREWS M10 ( 4 PIECES ) | 1 |
| 4.11 | 4233959 | SCREW M8x16 VP. | 1 |
| 4.12 | | SERRATED LOCK WASHER Ø8.2XØ25X35X2 | 1 |

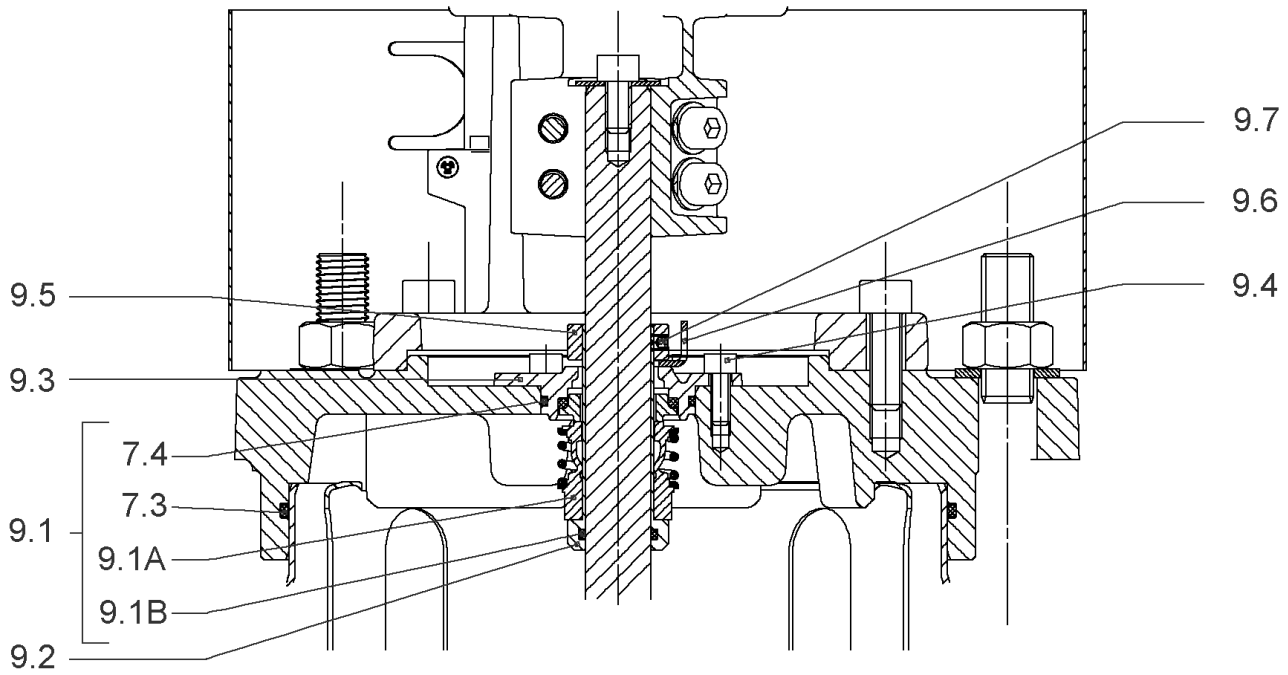
9.7
9.6
9.4
9.5
9.3
7.4
7.3
9.1
9.1A
9.1B
9.2

## CARTRIDGE HELIX22-36-52 O/E KIT (4143973)

| Item | Article no. | Description | Quantity |
|---|---|---|---|
| 9.1 | 4143974 | SEAL-KIT-HELIX22-36-52 O/E | 1 |
| 7.3 | 4179571 | > O-RING HOUSING PIPE HELIX22/36/52 VP. | 1 |
| 7.4 | 4179572 | > O-RING ID.42.52X2.62 EPDM VP. | 1 |
| 9.1A | 4179573 | > M.SEAL.HELIX22-36-52 O/E VP. | 1 |
| 9.1B | 4179574 | > O-RING ID.20x2.65 EPDM VP. | 1 |
| 9.2 | 4179566 | SHAFT SLEEVE D.20/20X60 1.4404 VP. | 1 |
| 9.3 | 4179567 | RING HOLDER Ø22 1.4301 VP. | 1 |
| 9.4 | 4176520 | SCREW CH M5x5 A4-70 ( 3PIECES ) | 1 |
| 9.5 | 4179568 | DRIVE RING D.31/22.1x11 MACH.VP. | 1 |
| 9.6 | 4179569 | TOOL M.S.CART.HELIX 8'' VP. | 1 |
| 9.7 | 4179570 | SCREW M6X16 ISO4762 8.8 GEOMET(4 PIECES) | 1 |

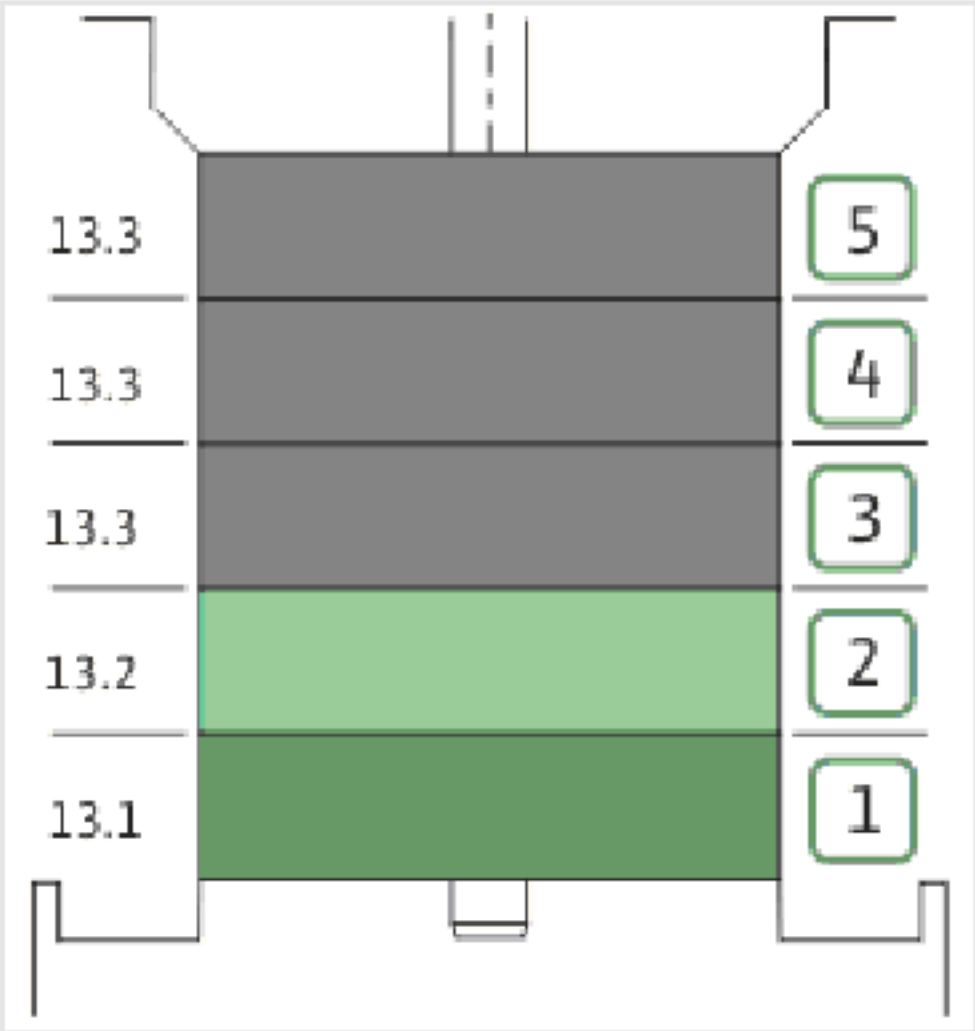
13.3
13.3
13.3
13.2
13.1
5
4
3
2
1

| Item | Article no. | Description | Quantity |
|---|---|---|---|
| 13.1 | 4157739 | FIRST STAGE HELIX 22 1.4307 KIT | 1 |
| | | > IMPELLER-H1-M+22-304 | 1 |
| | | > MACH.STG-CASING-WOGV-WNR-M+22-304 | 1 |
| 13.2 | 4157740 | BEARING STAGE HELIX 22 1.4307 KIT | 1 |
| | | > IMPELLER-H2-M+22-304 | 1 |
| | | > MACH.BEARING-STG-CASING-WNR-M+22-304 | 1 |
| | | > SHAFT-SLEEVE-D26xD22x16-CW | 1 |
| 13.3 | 4157743 | INTERMEDIATE STAGE HELIX 22 KIT | 1 |
| | | > MACH.STD-STG-CASING-WGV+NR-M+22-304 | 1 |
| | | > IMPELLER-H2-M+22-304 | 1 |

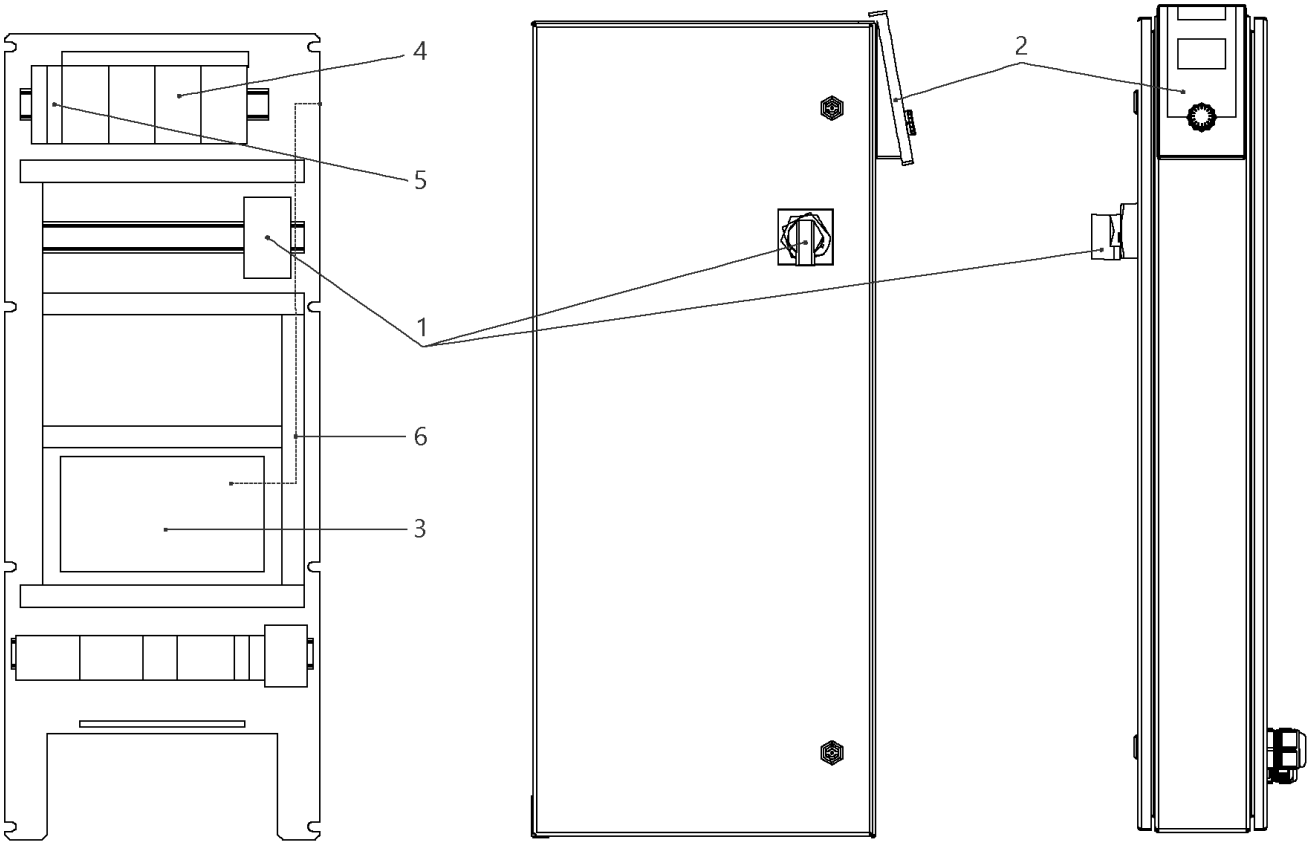
4
5
1
6
3
2

## W-CTRL-SCE-B-4x24A-T34-FM-ND4-AVC-PKG

| Item | Article no. | Description | Quantity |
|---|---|---|---|
| 1 | 2104468 | MAIN SWITCH OT125F3 L250 KIT | 1 |
| 2 | 4184784 | CONTROL PANEL HMI SC KIT | 1 |
| 2 | 4185259 | ASSEMBLY DISPLAY SC PKG VP. | 1 |
| Note: DISPLAY ALONE / PLATINE SEULE | | | |
| 3 | 4185257 | ASSEMBLY CPU SCe Booster VP. | 1 |
| 4 | 2051219 | AUTOM.CIRCUIT BREAKER S203 B32 FOR 15kW | 1 |
| 5 | 2046288 | CIRCUIT BREAKER S201 B16 | 1 |
| 6 | 4204004 | PATCH CABLE RJ45 CAT6 1,5M GREY SC-PANEL | 1 |

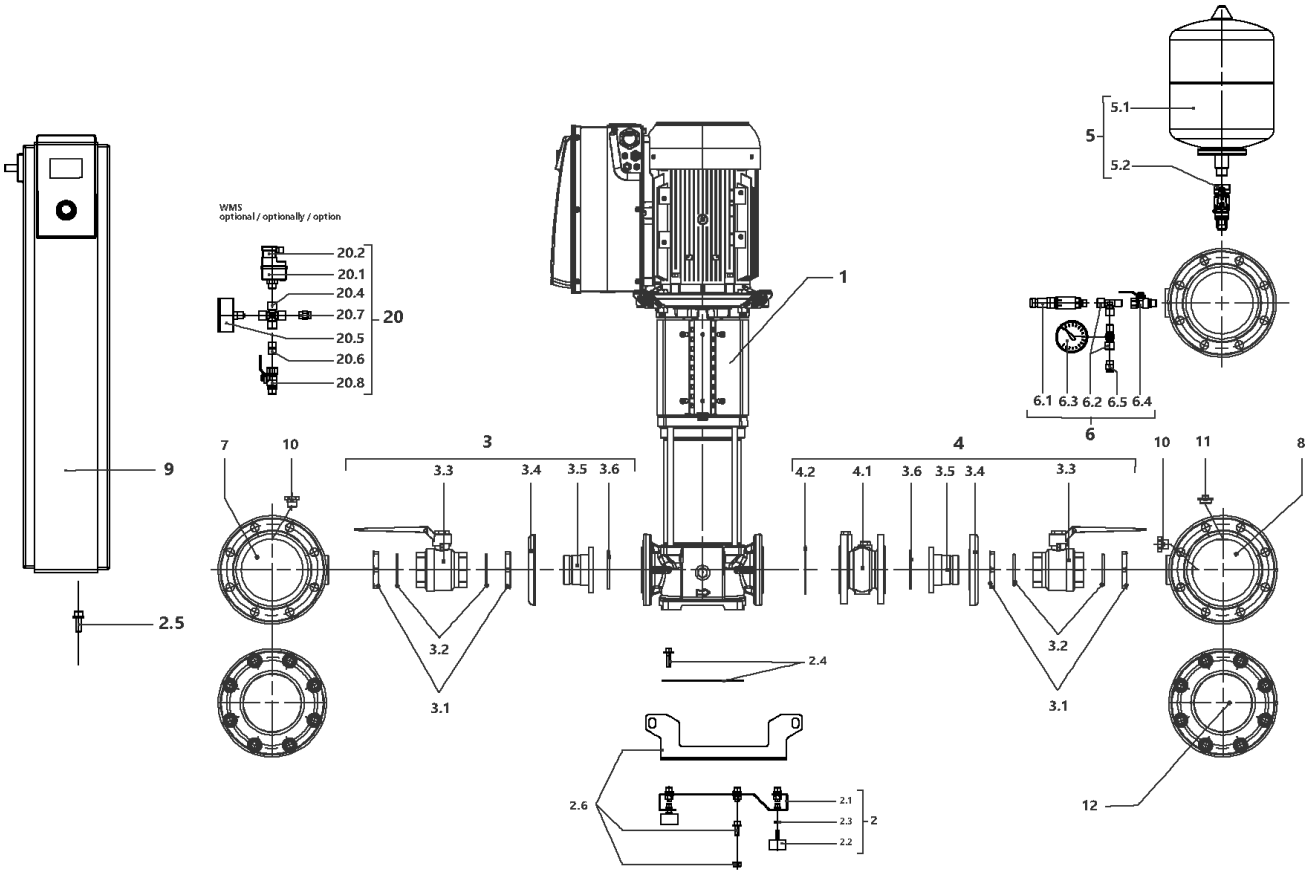
WMS
optional / optionally / option
20.2
20.1
20.4
20.7
20.5
20.6
20.8
20
1
5
5.1
5.2
6.1 6.3 6.2 6.5 6.4
6
9
2.5
7
10
3
3.3
3.4
3.5 3.6
3.2
3.1
4
4.2
4.1
3.6 3.5 3.4
3.3
3.2
3.1
10
11
8
12
2.4
2.6
2.1
2.3
2.2
2

## SiBoost Smart 4HELIX VE3602/5,5kW (2540921)

| Item | Article no. | Description | Quantity |
|---|---|---|---|
| 1 | | HELIX VE3602-5,5-4/16/E/S-FF240 | 1 |
| 2 | 4204913 | BASE PLATE DE4 1450x420 M10 KIT | 1 |
| 2.1 | | > BASEPLATE_4x4/6/10/16V_E300_BOX_150 | 1 |
| 2.2 | 2027881 | > VIBRATION DAMPER M.10X20 D.70 | 1 |
| 2.3 | 2028281 | > NUT M10 DIN936 (ISO4035) 17H VZ | 1 |
| 2.4 | 4203978 | > HOLDER PUMP Siboost Helix 22 KIT | 1 |
| 2.5 | 4197084 | > HOLDER SWITCHBOX WILO Smart Control KIT | 1 |
| 2.6 | 4203979 | > LIFTING Siboost HELIX 22/36 KIT | 1 |
| 3 | 4204892 | SUCTION SIDE Siboost Helix 36 KIT | 1 |
| 3.1 | 2027123 | > NUT G2½ X15 MS | 1 |
| 3.2 | 2025969 | > O-RING ID.72,39x5,33 EPDM 70SHORE | 1 |
| 3.2 | | > VALVE-BS-2"1/2-F/F-PS25-BRASS-NICK-ACS | 1 |
| 3.4 | 2032973 | > LAPPED FLANGE DN65 1.4301 DIN2642P | 1 |
| 3.5 | | > UNION INSERT DN65-G21/2" FLANGE AISI304 | 1 |
| 3.6 | 2028296 | > O-RING ID.91,44x5,33 EPDM 70SHORE | 1 |
| 4 | 4204894 | DELIVERY SIDE Siboost Helix 36 KIT | 1 |
| 3.1 | 2027123 | > NUT G2½ X15 MS | 1 |
| 3.2 | 2025969 | > O-RING ID.72,39x5,33 EPDM 70SHORE | 1 |
| 3.3 | | > VALVE-BS-2"1/2-F/F-PS25-BRASS-NICK-ACS | 1 |
| Note: accessories see price list/Zubehör siehe | | | |
| 3.4 | 2032973 | > LAPPED FLANGE DN65 1.4301 DIN2642P | 1 |
| 3.5 | | > UNION INSERT DN65-G21/2" FLANGE AISI304 | 1 |
| Note: accessories see price list/Zubehör siehe | | | |
| 3.6 | 2028296 | > O-RING ID.91,44x5,33 EPDM 70SHORE | 1 |
| 4.1 | 2127586 | > NON RETURN VALVE DN65 PN16 TYP402B VP. | 1 |
| 4.2 | 2119912 | > GASKET D.77/127X2 DN65 C4430 VP. | 1 |
| 5 | 4203983 | DIAPHREM TANK 8L/PN16 DIN4807/T5 KIT | 1 |
| 5.1 | 2045914 | > DIAPHREM TANK 8L TYP-DD 16BAR | 1 |
| 5.2 | 4189350 | > FLOW FITTING G3/4 FOR DIAPHRAG VESSEL VP | 1 |
| 6 | 4197076 | PRESSURE SENSOR/ GAUGE 0-16BAR KIT | 1 |
| 6.1 | 2085909 | > PRESS.SENSOR 1/4" 0-16BAR 4-20MA VP. | 1 |
| 6.2 | 4197077 | > T-PIECE 1/4" VP. | 1 |
| 6.3 | 2028692 | > PRESSURE GAUGE NG63-PN16-G1/4 | 1 |
| 6.4 | 2028291 | > BALL TAP R1/4" PN42 GIACOMINI R254DL | 1 |

| Item | Article no. | Description | Quantity |
|---|---|---|---|
| 6.5 | 2028691 | > BLOWGUN 1/4" MS 30BAR VP. | 1 |
| 7 | 4204914 | PIPE DE4 DN150-4x21/2"+3x1/4x1450 VP. | 1 |
| 8 | 4204915 | PIPE DE4 DN150-4x21/2"+2x1/4+1x3/4x1450 | 1 |
| 9 | | W-CTRL-SCE-B-4x13A-T34-FM-ND2-AVC-PKG | 1 |
| 10 | 4197079 | PLUG G1/4"x10 AISI304 KIT | 1 |
| 11 | 2032654 | PLUG R3/4" MS VIEGA 1751 | 1 |
| 12 | 4204916 | BLIND-FLANGE DN150 PN10/16-A2 KIT | 1 |
| | 2135807 | > FLAT GASKET D.169/224x2 DN150 C4430 VP. | 1 |
| | | > NUT M20 DIN934 A2 1.4301 | 1 |
| | | > Screw M20X80 ISO4014 A4 | 1 |
| | | > WASHER A21 DIN125 A2 1.4301 | 1 |
| | | > FULL FLANGE ST.DN150 PN16 EN1092-1/05 A2 | 1 |
| | | > FLANGE COVER DN150 DIN 3443 FORM A | 1 |
| 20 | | ASSEMBLY WMS. DE-EB. +VP | 1 |
| 20.1 | 2028652 | > PRESSURE SWITCH PS3-ASR 1/(1,3) VP. | 1 |
| 20.2 | 2130983 | > PLUG PS3-415 WITH KABEL 1,5M 2NO VP. | 1 |
| 20.4 | 2028290 | > CROSSPIECE R1/4" MS-NICKEL | 1 |
| 20.5 | 2028687 | > PRESSURE GAUGE NG63 R1/4" HI.0-6BAR | 1 |
| 20.6 | 2054268 | > DUAL NIPPLE G1/4" x G1/4" MS VP. | 1 |
| 20.7 | 2028691 | > BLOWGUN 1/4" MS 30BAR VP. | 1 |
| 20.8 | 2028291 | > BALL TAP R1/4" PN42 GIACOMINI R254DL | 1 |

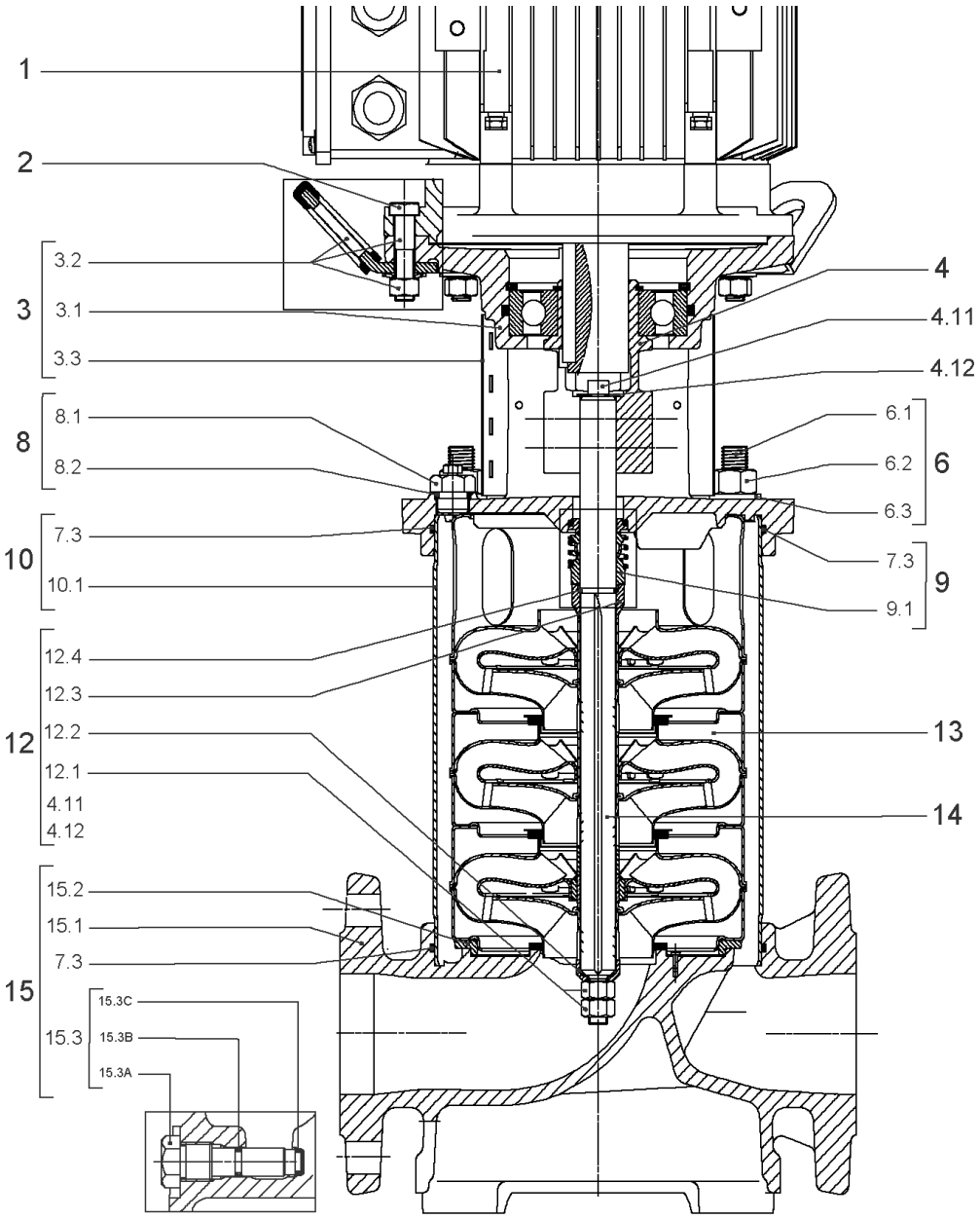
1
2
3
3.2
3.1
3.3
8
8.1
8.2
10
7.3
10.1
12
12.4
12.3
12.2
12.1
4.11
4.12
15
15.2
15.1
7.3
15.3
15.3C
15.3B
15.3A
4
4.11
4.12
6
6.1
6.2
6.3
9
7.3
9.1
13
14

| Item | Article no. | Description | Quantity |
|---|---|---|---|
| 1 | | DRIVE HELIX-VE3602-FF240-IE2-ATB KIT | 1 |
| Note: MOTOR BRAND ATB | | | |
| 1 | | DRIVE HELIXVE3602-5Kw-FF240 IE4-WE KIT | 1 |
| Note: MOTOR BRAND WILO ELEC | | | |
| | | SPARE PARTS MOTOR:ON REQUEST | 1 |
| 2 | 4174093 | SCREW M12X50 (4 PIECES) | 1 |
| 3 | 4186358 | LANTERN HELIX OPTI 8" FF240 KIT | 1 |
| 3.1 | | > M+8_LANTERN_ONE-PIECE_FF240_CATA_DWA | 1 |
| 3.2 | 4186346 | > EYELET CPL.FF240 HELIX (4 PIECES) | 1 |
| 3.3 | 4184853 | > COUPLING PROTECTOR FT HELIX 8'' KIT | 1 |
| 4 | 4186347 | COUPLING D.22XD.38 FF240T130 HELIX KIT | 1 |
| 6 | 4181156 | STUD BOLT M16X233 KIT | 1 |
| 6.1 | | > TIE BOLT M16-233x24x44-1.4057 | 1 |
| 6.2 | 4179562 | > NUT M16 8.8 ISO4032 (4 PIECES) | 1 |
| 6.3 | 4097852 | > WASHER-CS-16.4-32-2.8-NFE25-511-A2 | 1 |
| 8 | 4186377 | FILING/PURGING PLUG 304 HELIX KIT | 1 |
| 8.1 | | > FILLING/VENTING-PLUG-MVI8/10"-304 | 1 |
| 8.2 | 4032291 | > O-RING 17x3 EPDM KTW/WRC | 1 |
| 9 | 4192148 | SEAL-KIT-HELIX22-36-52 FIRST O/E | 1 |
| 7.3 | 4179571 | > O-RING HOUSING PIPE HELIX22/36/52 VP. | 1 |
| 9.1 | 4179573 | > M.SEAL.HELIX22-36-52 O/E VP. | 1 |
| 10 | 4181070 | HOUSING PIPE D.204X197 1.4307 KIT | 1 |
| 7.3 | 4179571 | > O-RING HOUSING PIPE HELIX22/36/52 VP. | 1 |
| 10.1 | | > HOUSING-PIPE Ø204-M+3602-304 | 1 |
| 12 | 4186374 | SHAFT EQUIPMENT HELIX 36 FIRST KIT | 1 |
| 13 | | HYDRAULIC HELIX V 3602 | 1 |
| 14 | 4186343 | SHAFT D.22X301 1.4057 VP. | 1 |
| 15 | 4186381 | EQUIPED HOUSING HELIX OPTI DN65 GJL KIT | 1 |
| 15.1 | | > PUMP CASING MONO.M+8" DN65 PN16 DWA | 1 |
| 15.2 | | > HYD.SUP.M+8" MONO.HOUSING DN65 DWA | 1 |
| 15.3 | 4106048 | > DRAIN/PRIMING PLUG EPDM HELIX FIRST KIT | 1 |
| 15.3A | | >> DRAIN AND PRIMING PLUG-VMI10"-304 | 1 |
| 15.3B | 4032293 | >> O-RING-10x3-EPDM-KTW/WRC | 1 |
| 15.3C | 4233957 | >> O-RING ID.9 EPDM VP. | 1 |

| Item | Article no. | Description | Quantity |
|---|---|---|---|
| 7.3 | 4179571 | > O-RING HOUSING PIPE HELIX22/36/52 VP. | 1 |
| 13.1A | 4161200 | > NECK RING 1.STAGE HELIX V36/52 KIT | 1 |
| | | >> NECK-RING-M+36/52 | 1 |
| | | >> HYDRAULIC SUPPORT CAP M+36/52 304 | 1 |
| | | >> SCREW TCL M3X8 A4 POZIDRIV | 1 |

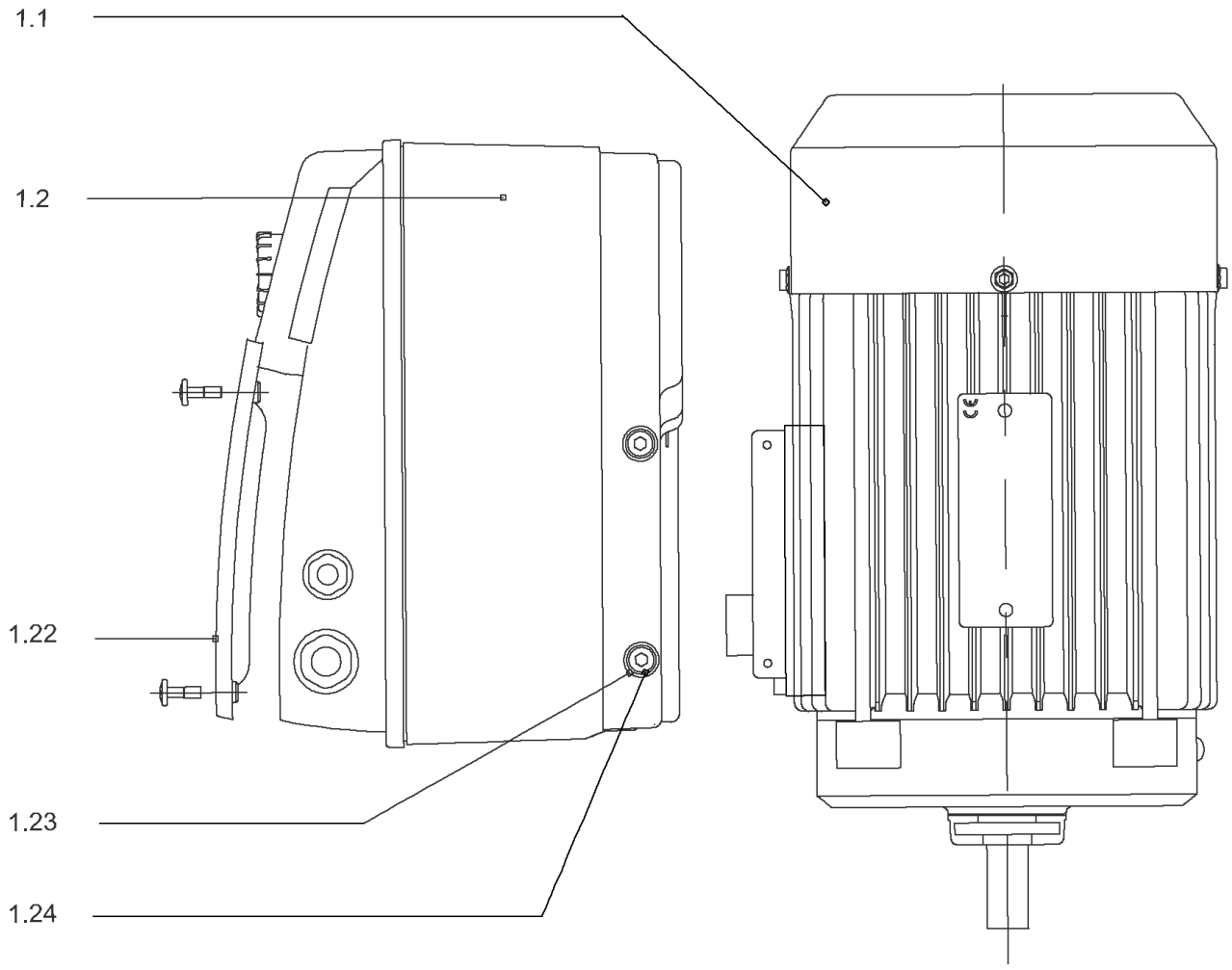
1.1
1.2
1.22
1.23
1.24

## DRIVE HELIX-VE3602-FF240-IE2-ATB KIT

| Item | Article no. | Description | Quantity |
|---|---|---|---|
| 1.1 | | MOTOR 5,5/2/132 FF240 T400V 50HZ IE2 VP | 1 |
| Note: no longer available/nicht mehrlieferbar/n'est plus disponible | | | |
| | | SPARE PARTS MOTOR:ON REQUEST | 1 |
| 1.2 | 4186773 | MODULE HELIX-VE3602-IE2-ATB KIT | 1 |
| 1.22 | 2111344 | > MODULE COVER/GASKET TL5 KIT | 1 |
| 1.23 | 4215716 | > SCREW M5X16 DIN912 8.8 A2A (4pieces) VP. | 1 |
| 1.24 | 2057978 | > RONDELLE A5,3 DIN6797 FST ZN (4 PIECES) | 1 |

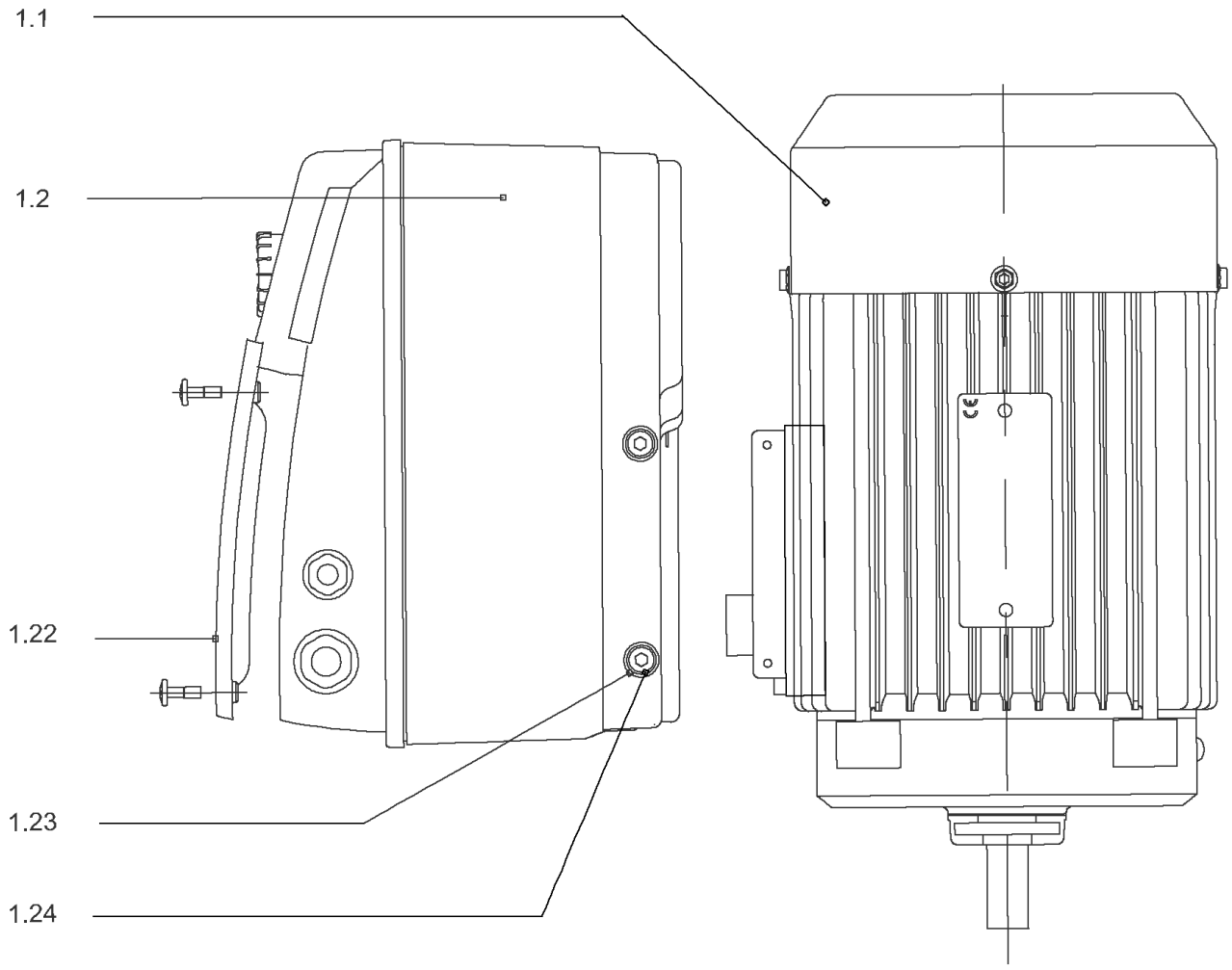
1.1
1.2
1.22
1.23
1.24

## DRIVE HELIXVE3602-5Kw-FF240 IE4-WE KIT

| Item | Article no. | Description | Quantity |
|---|---|---|---|
| 1.1 | 4207928 | MO.5.5/2/132FF240 3~400V 50Hz IE4 WE VP. | 1 |
| | | SPARE PARTS MOTOR:ON REQUEST | 1 |
| 1.2 | 4212635 | MODULE HELIX-VE3602-IE4-WE KIT | 1 |
| 1.22 | 2111344 | > MODULE COVER/GASKET TL5 KIT | 1 |
| 1.23 | 4215716 | > SCREW M5X16 DIN912 8.8 A2A (4pieces) VP. | 1 |
| 1.24 | 2057978 | > RONDELLE A5,3 DIN6797 FST ZN (4 PIECES) | 1 |

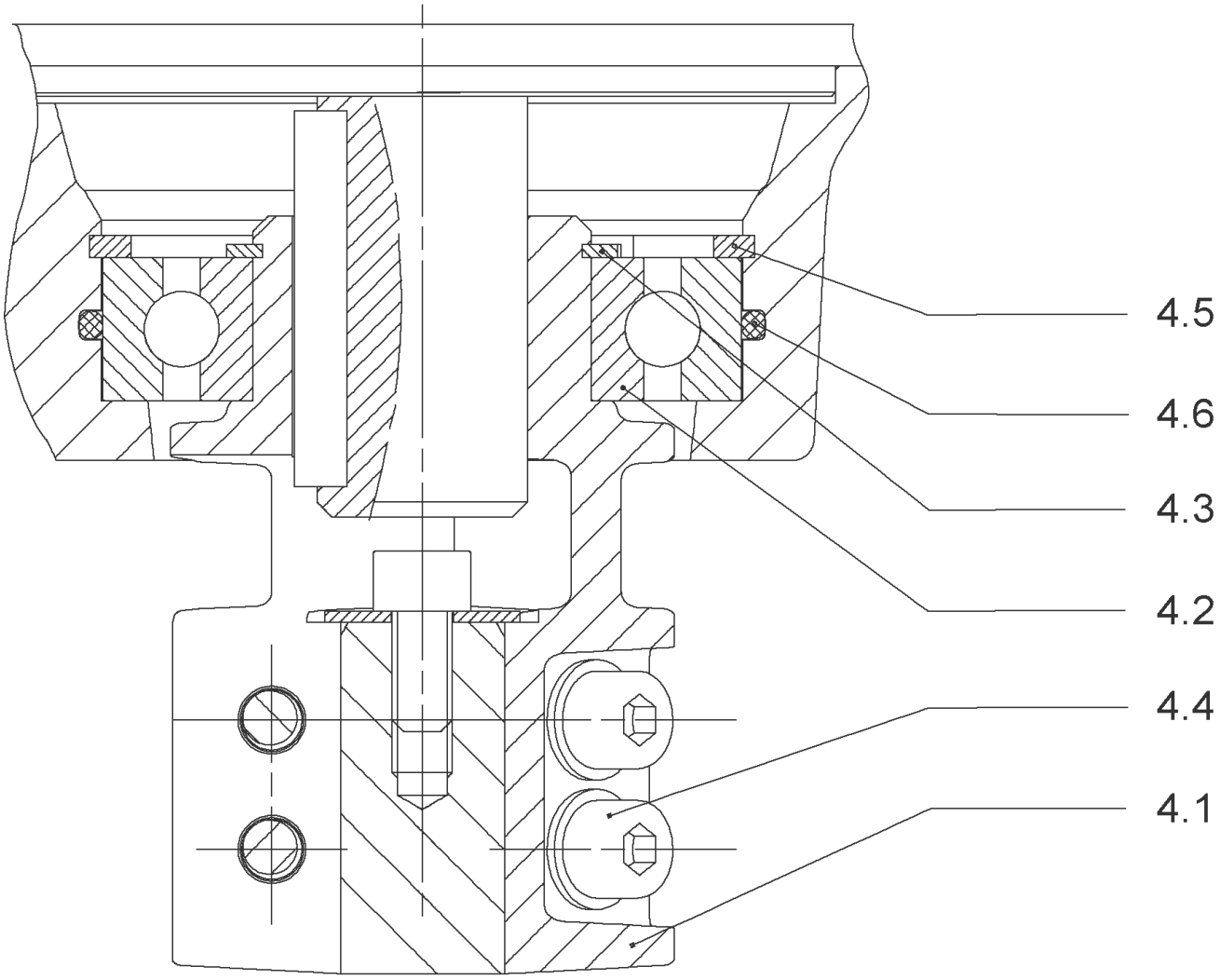
4.5
4.6
4.3
4.2
4.4
4.1

## COUPLING D.22XD.38 FF240T130 HELIX KIT (4186347)

| Item | Article no. | Description | Quantity |
|---|---|---|---|
| 4.1 | | COUPLING-VMI-D22xD38-FF265-MACHINED | 1 |
| 4.2 | 2131017 | BALL BEARING 6310/ZZ-C4(HT)VP. | 1 |
| 4.3 | 4234253 | CIRCLIP-FOR-SHAFT-D50x2 VP. | 1 |
| 4.4 | 4157726 | SCREW KIT M8X30 (4 PIECES) | 1 |
| 4.5 | 4234255 | CIRCLIPS 110X4 VP. | 1 |
| 4.6 | 4233944 | O-RING ID.110 VP. | 1 |
| | | NOMEL CONTACT WASHER 8x16x1,4 STEEL ZC | 1 |

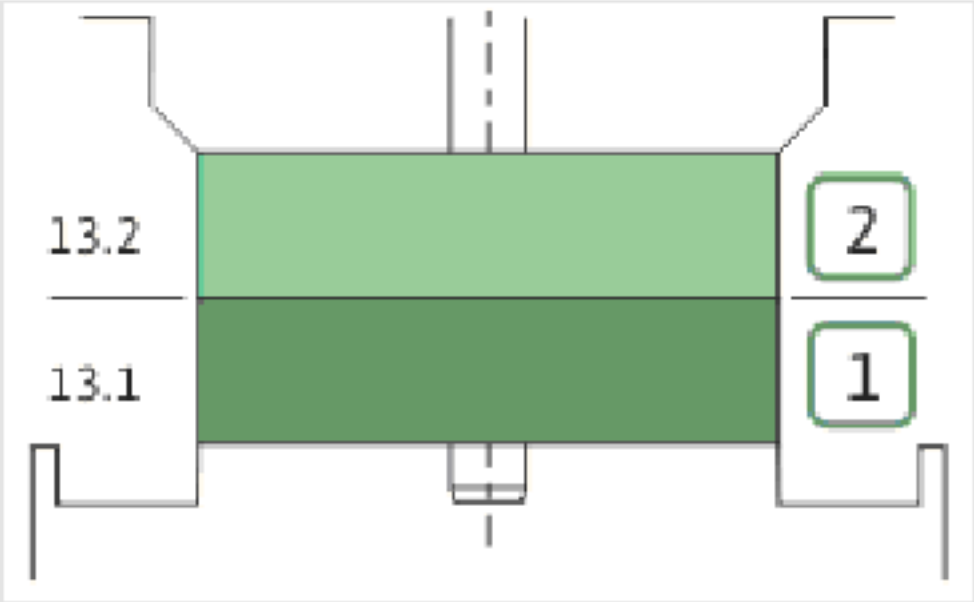
13.2
13.1
2
1

| Item | Article no. | Description | Quantity |
|---|---|---|---|
| 13.1 | 4161192 | INTERMEDIATE STAGE HELIX V36 1.4301 KIT | 1 |
| | | > SLEEVE-SPACER-D22XL16,66-316L | 1 |
| | | > MACH.BEARING-DIFFUSER+NR-M+36-304 | 1 |
| | | > SHAFT-SLEEVE-D26xD22x16-CW | 1 |
| | | > IMPELLER-H1-M+36-304 | 1 |
| 13.1A | 4161200 | > NECK RING 1.STAGE HELIX V36/52 KIT | 1 |
| | | >> NECK-RING-M+36/52 | 1 |
| | | >> HYDRAULIC SUPPORT CAP M+36/52 304 | 1 |
| | | >> SCREW TCL M3X8 A4 POZIDRIV | 1 |
| 13.2 | 4161194 | UPPER STAGE HELIX 36 1.4301 KIT | 1 |
| | | > STOP COLLAR OF IMPELLER L20-Ø22-316L | 1 |
| | | > IMPELLER-H4-M+36-304 | 1 |
| | | > MACH.-RIGID-STD-DISCH.-CHAMBER-M+36-304 | 1 |

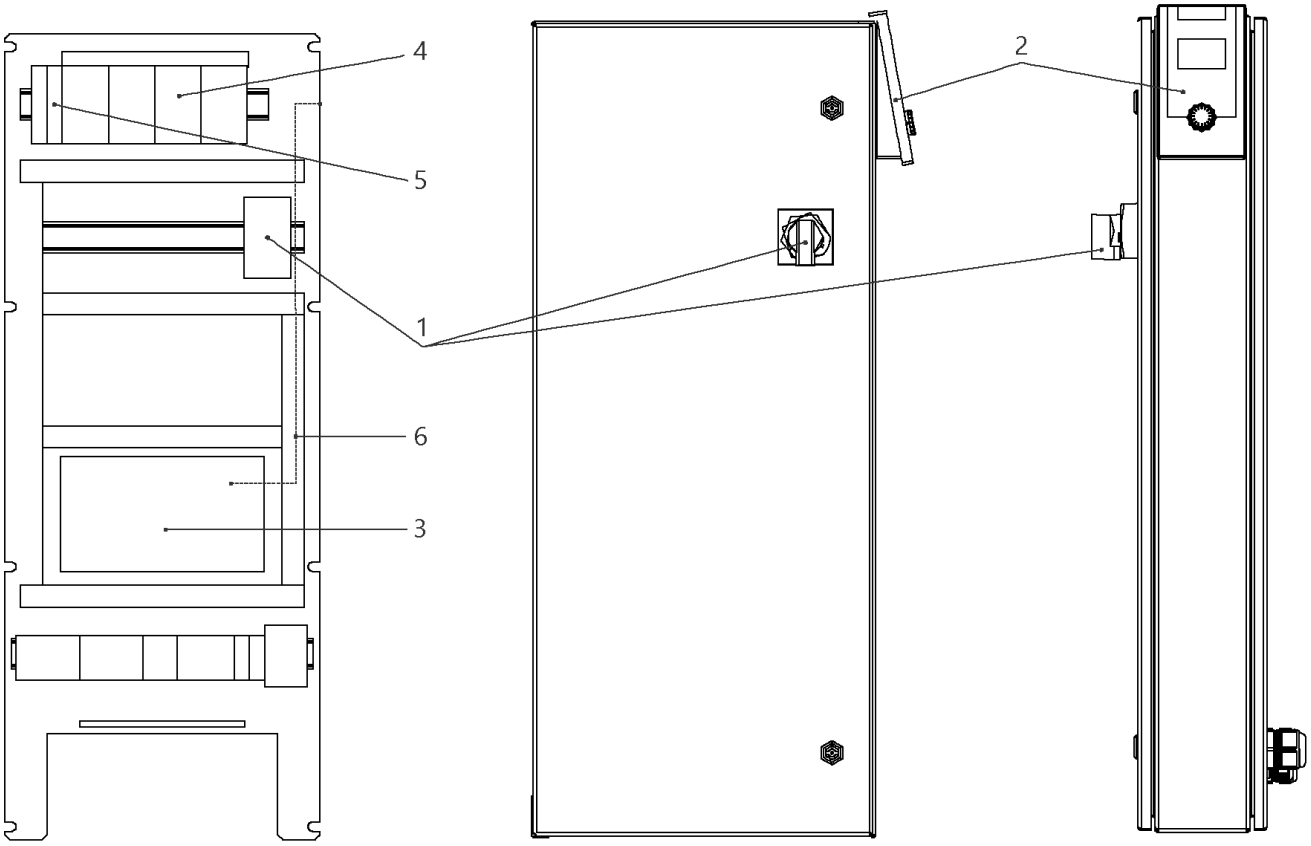
4
5
1
6
3
2

## W-CTRL-SCE-B-4x13A-T34-FM-ND2-AVC-PKG

| Item | Article no. | Description | Quantity |
|---|---|---|---|
| 1 | 2104477 | MAIN SWITCH OT80F3 L105 KIT | 1 |
| Note: TO / BIS / JUSQU'AU 30/06/2015 | | | |
| 1 | 2104473 | MAIN SWITCH OT63F3 L105 KIT | 1 |
| Note: FROM / AB / À PARTIR DU 01/07/2015 | | | |
| 2 | 4184784 | CONTROL PANEL HMI SC KIT | 1 |
| 2 | 4185259 | ASSEMBLY DISPLAY SC PKG VP. | 1 |
| Note: DISPLAY ALONE / PLATINE SEULE | | | |
| 3 | 4185257 | ASSEMBLY CPU SCe Booster VP. | 1 |
| 5 | 2046288 | CIRCUIT BREAKER S201 B16 | 1 |
| 4 | 2051217 | AUTOM.CIRCUIT BREAKER S203 B16 TO7,5kW | 1 |
| 6 | 4194956 | PATCH CABLE RJ45 CAT6 1,0M BLUE SC-PANEL | 1 |

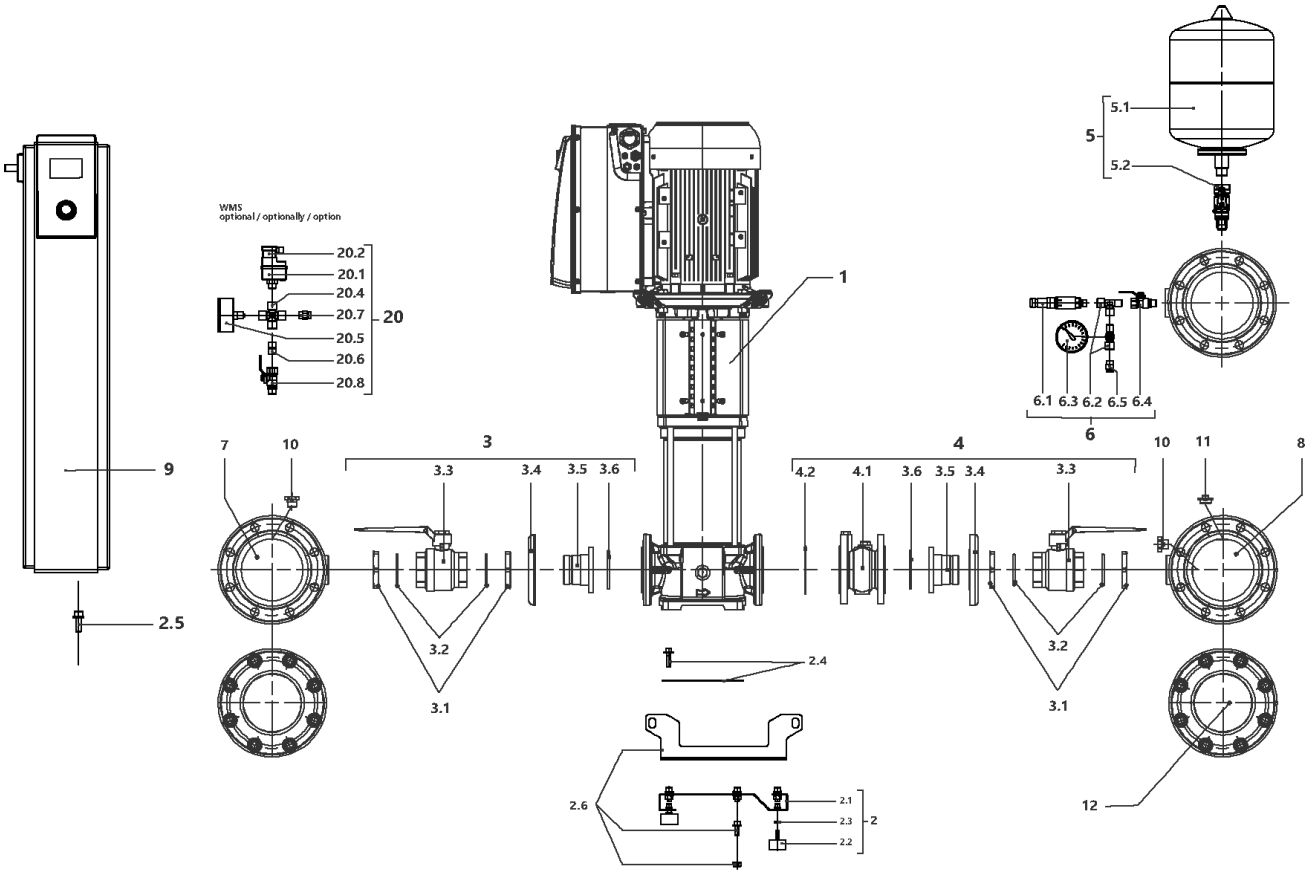
WMS
optional / optionally / option
20.2
20.1
20.4
20.7
20.5
20.6
20.8
20
1
5
5.1
5.2
6.1 6.3 6.2 6.5 6.4
6
9
2.5
7
10
3
3.3
3.4
3.5 3.6
3.2
3.1
4
4.2
4.1
3.6 3.5 3.4
3.3
3.2
3.1
10
11
8
12
2.4
2.6
2.1
2.3
2.2
2

## SiBoost Smart 4HELIX VE3602/7,5kW (2540922)

| Item | Article no. | Description | Quantity |
|---|---|---|---|
| 1 | | HELIX VE3602-7,5-4/16/E/S-FF240 | 1 |
| 2 | 4204913 | BASE PLATE DE4 1450x420 M10 KIT | 1 |
| 2.1 | | > BASEPLATE_4x4/6/10/16V_E300_BOX_150 | 1 |
| 2.2 | 2027881 | > VIBRATION DAMPER M.10X20 D.70 | 1 |
| 2.3 | 2028281 | > NUT M10 DIN936 (ISO4035) 17H VZ | 1 |
| 2.4 | 4203978 | > HOLDER PUMP Siboost Helix 22 KIT | 1 |
| 2.5 | 4197084 | > HOLDER SWITCHBOX WILO Smart Control KIT | 1 |
| 2.6 | 4203979 | > LIFTING Siboost HELIX 22/36 KIT | 1 |
| 3 | 4204892 | SUCTION SIDE Siboost Helix 36 KIT | 1 |
| 3.1 | 2027123 | > NUT G2½ X15 MS | 1 |
| 3.2 | 2025969 | > O-RING ID.72,39x5,33 EPDM 70SHORE | 1 |
| 3.2 | | > VALVE-BS-2"1/2-F/F-PS25-BRASS-NICK-ACS | 1 |
| 3.4 | 2032973 | > LAPPED FLANGE DN65 1.4301 DIN2642P | 1 |
| 3.5 | | > UNION INSERT DN65-G21/2" FLANGE AISI304 | 1 |
| 3.6 | 2028296 | > O-RING ID.91,44x5,33 EPDM 70SHORE | 1 |
| 4 | 4204894 | DELIVERY SIDE Siboost Helix 36 KIT | 1 |
| 3.1 | 2027123 | > NUT G2½ X15 MS | 1 |
| 3.2 | 2025969 | > O-RING ID.72,39x5,33 EPDM 70SHORE | 1 |
| 3.3 | | > VALVE-BS-2"1/2-F/F-PS25-BRASS-NICK-ACS | 1 |
| Note: accessories see price list/Zubehör siehe | | | |
| 3.4 | 2032973 | > LAPPED FLANGE DN65 1.4301 DIN2642P | 1 |
| 3.5 | | > UNION INSERT DN65-G21/2" FLANGE AISI304 | 1 |
| Note: accessories see price list/Zubehör siehe | | | |
| 3.6 | 2028296 | > O-RING ID.91,44x5,33 EPDM 70SHORE | 1 |
| 4.1 | 2127586 | > NON RETURN VALVE DN65 PN16 TYP402B VP. | 1 |
| 4.2 | 2119912 | > GASKET D.77/127X2 DN65 C4430 VP. | 1 |
| 5 | 4203983 | DIAPHREM TANK 8L/PN16 DIN4807/T5 KIT | 1 |
| 5.1 | 2045914 | > DIAPHREM TANK 8L TYP-DD 16BAR | 1 |
| 5.2 | 4189350 | > FLOW FITTING G3/4 FOR DIAPHRAG VESSEL VP | 1 |
| 6 | 4197076 | PRESSURE SENSOR/ GAUGE 0-16BAR KIT | 1 |
| 6.1 | 2085909 | > PRESS.SENSOR 1/4" 0-16BAR 4-20MA VP. | 1 |
| 6.2 | 4197077 | > T-PIECE 1/4" VP. | 1 |
| 6.3 | 2028692 | > PRESSURE GAUGE NG63-PN16-G1/4 | 1 |
| 6.4 | 2028291 | > BALL TAP R1/4" PN42 GIACOMINI R254DL | 1 |

| Item | Article no. | Description | Quantity |
|---|---|---|---|
| 6.5 | 2028691 | > BLOWGUN 1/4" MS 30BAR VP. | 1 |
| 7 | 4204914 | PIPE DE4 DN150-4x21/2"+3x1/4x1450 VP. | 1 |
| 8 | 4204915 | PIPE DE4 DN150-4x21/2"+2x1/4+1x3/4x1450 | 1 |
| 9 | | W-CTRL-SCE-B-4x16A-T34-FM-ND2-AVC-PKG | 1 |
| 10 | 4197079 | PLUG G1/4"x10 AISI304 KIT | 1 |
| 11 | 2032654 | PLUG R3/4" MS VIEGA 1751 | 1 |
| 12 | 4204916 | BLIND-FLANGE DN150 PN10/16-A2 KIT | 1 |
| | 2135807 | > FLAT GASKET D.169/224x2 DN150 C4430 VP. | 1 |
| | | > NUT M20 DIN934 A2 1.4301 | 1 |
| | | > Screw M20X80 ISO4014 A4 | 1 |
| | | > WASHER A21 DIN125 A2 1.4301 | 1 |
| | | > FULL FLANGE ST.DN150 PN16 EN1092-1/05 A2 | 1 |
| | | > FLANGE COVER DN150 DIN 3443 FORM A | 1 |
| 20 | | ASSEMBLY WMS. DE-EB. +VP | 1 |
| 20.1 | 2028652 | > PRESSURE SWITCH PS3-ASR 1/(1,3) VP. | 1 |
| 20.2 | 2130983 | > PLUG PS3-415 WITH KABEL 1,5M 2NO VP. | 1 |
| 20.4 | 2028290 | > CROSSPIECE R1/4" MS-NICKEL | 1 |
| 20.5 | 2028687 | > PRESSURE GAUGE NG63 R1/4" HI.0-6BAR | 1 |
| 20.6 | 2054268 | > DUAL NIPPLE G1/4" x G1/4" MS VP. | 1 |
| 20.7 | 2028691 | > BLOWGUN 1/4" MS 30BAR VP. | 1 |
| 20.8 | 2028291 | > BALL TAP R1/4" PN42 GIACOMINI R254DL | 1 |

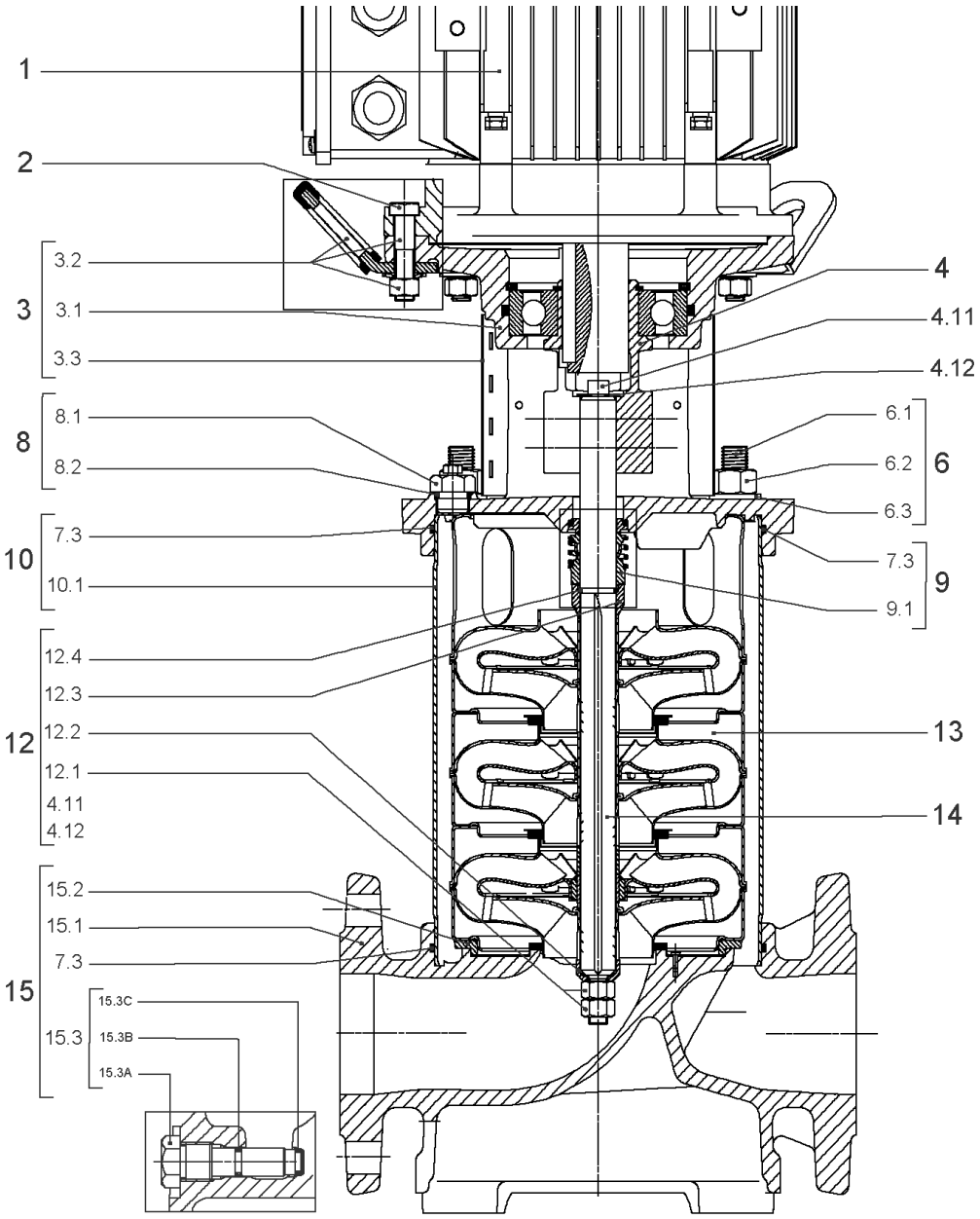
1
2
3
3.2
3.1
3.3
8
8.1
8.2
10
7.3
10.1
12
12.4
12.3
12.2
12.1
4.11
4.12
15
15.2
15.1
7.3
15.3
15.3C
15.3B
15.3A
4
4.11
4.12
6
6.1
6.2
6.3
9
7.3
9.1
13
14

| Item | Article no. | Description | Quantity |
|---|---|---|---|
| 1 | | DRIVE HELIX-VE3602-FF240-IE2-ATB KIT | 1 |
| Note: MOTOR BRAND ATB | | | |
| 1 | | DRIVE HELIXVE3602-7Kw-FF240 IE4-WE KIT | 1 |
| Note: MOTOR BRAND WILO ELEC | | | |
| | | SPARE PARTS MOTOR:ON REQUEST | 1 |
| 2 | 4174093 | SCREW M12X50 (4 PIECES) | 1 |
| 3 | 4186358 | LANTERN HELIX OPTI 8" FF240 KIT | 1 |
| 3.1 | | > M+8_LANTERN_ONE-PIECE_FF240_CATA_DWA | 1 |
| 3.2 | 4186346 | > EYELET CPL.FF240 HELIX (4 PIECES) | 1 |
| 3.3 | 4184853 | > COUPLING PROTECTOR FT HELIX 8'' KIT | 1 |
| 4 | 4186347 | COUPLING D.22XD.38 FF240T130 HELIX KIT | 1 |
| 6 | 4181156 | STUD BOLT M16X233 KIT | 1 |
| 6.1 | | > TIE BOLT M16-233x24x44-1.4057 | 1 |
| 6.2 | 4179562 | > NUT M16 8.8 ISO4032 (4 PIECES) | 1 |
| 6.3 | 4097852 | > WASHER-CS-16.4-32-2.8-NFE25-511-A2 | 1 |
| 8 | 4186377 | FILING/PURGING PLUG 304 HELIX KIT | 1 |
| 8.1 | | > FILLING/VENTING-PLUG-MVI8/10"-304 | 1 |
| 8.2 | 4032291 | > O-RING 17x3 EPDM KTW/WRC | 1 |
| 9 | 4192148 | SEAL-KIT-HELIX22-36-52 FIRST O/E | 1 |
| 7.3 | 4179571 | > O-RING HOUSING PIPE HELIX22/36/52 VP. | 1 |
| 9.1 | 4179573 | > M.SEAL.HELIX22-36-52 O/E VP. | 1 |
| 10 | 4181070 | HOUSING PIPE D.204X197 1.4307 KIT | 1 |
| 7.3 | 4179571 | > O-RING HOUSING PIPE HELIX22/36/52 VP. | 1 |
| 10.1 | | > HOUSING-PIPE Ø204-M+3602-304 | 1 |
| 12 | 4186374 | SHAFT EQUIPMENT HELIX 36 FIRST KIT | 1 |
| 13 | | HYDRAULIC HELIX V 3602 | 1 |
| 14 | 4186343 | SHAFT D.22X301 1.4057 VP. | 1 |
| 15 | 4186381 | EQUIPED HOUSING HELIX OPTI DN65 GJL KIT | 1 |
| 15.1 | | > PUMP CASING MONO.M+8" DN65 PN16 DWA | 1 |
| 15.2 | | > HYD.SUP.M+8" MONO.HOUSING DN65 DWA | 1 |
| 15.3 | 4106048 | > DRAIN/PRIMING PLUG EPDM HELIX FIRST KIT | 1 |
| 15.3A | | >> DRAIN AND PRIMING PLUG-VMI10"-304 | 1 |
| 15.3B | 4032293 | >> O-RING-10x3-EPDM-KTW/WRC | 1 |
| 15.3C | 4233957 | >> O-RING ID.9 EPDM VP. | 1 |

| Item | Article no. | Description | Quantity |
|---|---|---|---|
| 7.3 | 4179571 | > O-RING HOUSING PIPE HELIX22/36/52 VP. | 1 |
| 13.1A | 4161200 | > NECK RING 1.STAGE HELIX V36/52 KIT | 1 |
| | | >> NECK-RING-M+36/52 | 1 |
| | | >> HYDRAULIC SUPPORT CAP M+36/52 304 | 1 |
| | | >> SCREW TCL M3X8 A4 POZIDRIV | 1 |

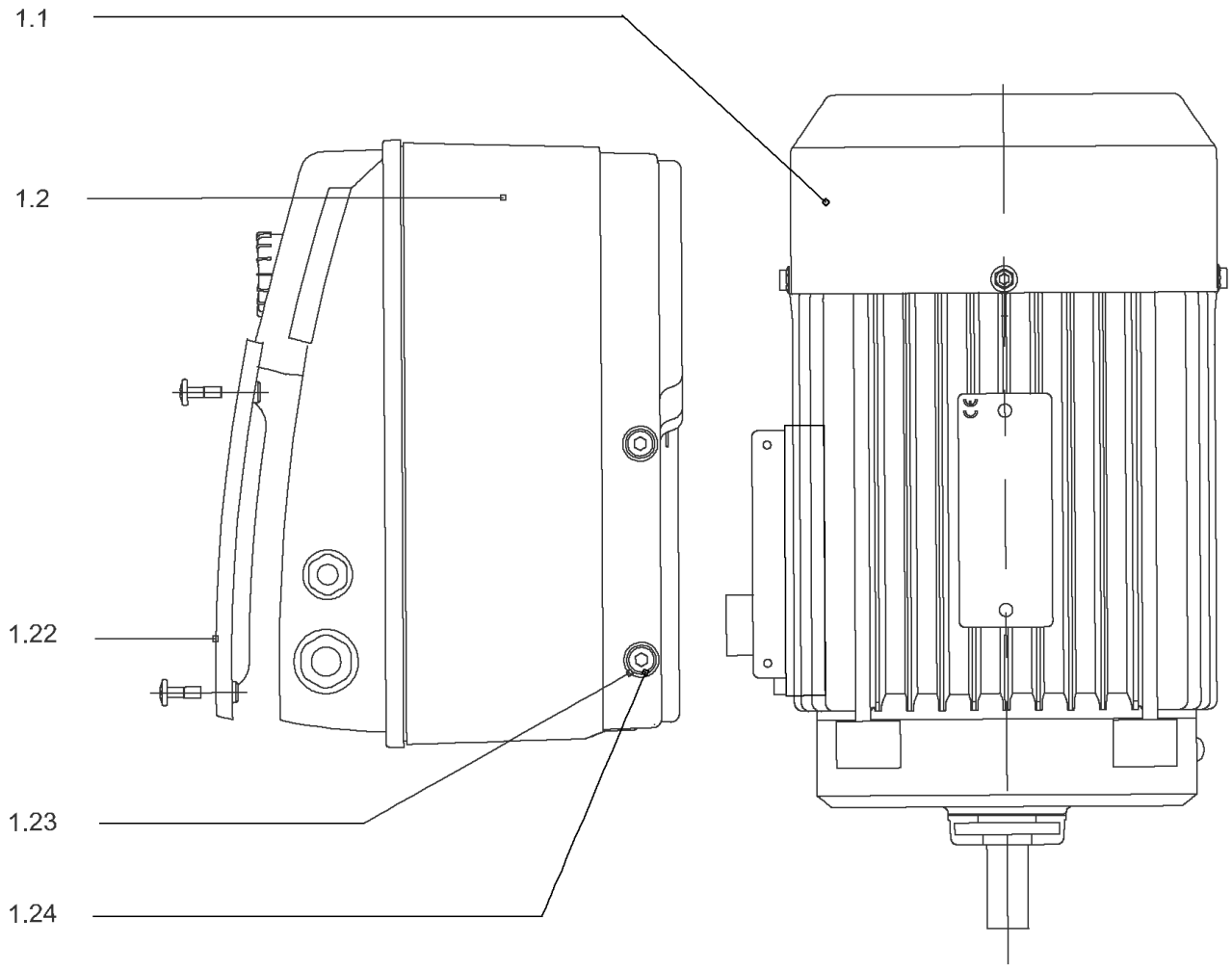
1.1
1.2
1.22
1.23
1.24

## DRIVE HELIX-VE3602-FF240-IE2-ATB KIT

| Item | Article no. | Description | Quantity |
|---|---|---|---|
| 1.1 | | MOTOR 7,5/2/132 FF240 3~380V 60HZ IE2 VP | 1 |
| Note: no longer available/nicht mehrlieferbar/n'est plus disponible | | | |
| | | SPARE PARTS MOTOR:ON REQUEST | 1 |
| 1.2 | 4195909 | MODULE HELIX-VE3602-7.5-IE2-ATB KIT | 1 |
| 1.22 | 2111344 | > MODULE COVER/GASKET TL5 KIT | 1 |
| 1.23 | 4215716 | > SCREW M5X16 DIN912 8.8 A2A (4pieces) VP. | 1 |
| 1.24 | 2057978 | > RONDELLE A5,3 DIN6797 FST ZN (4 PIECES) | 1 |

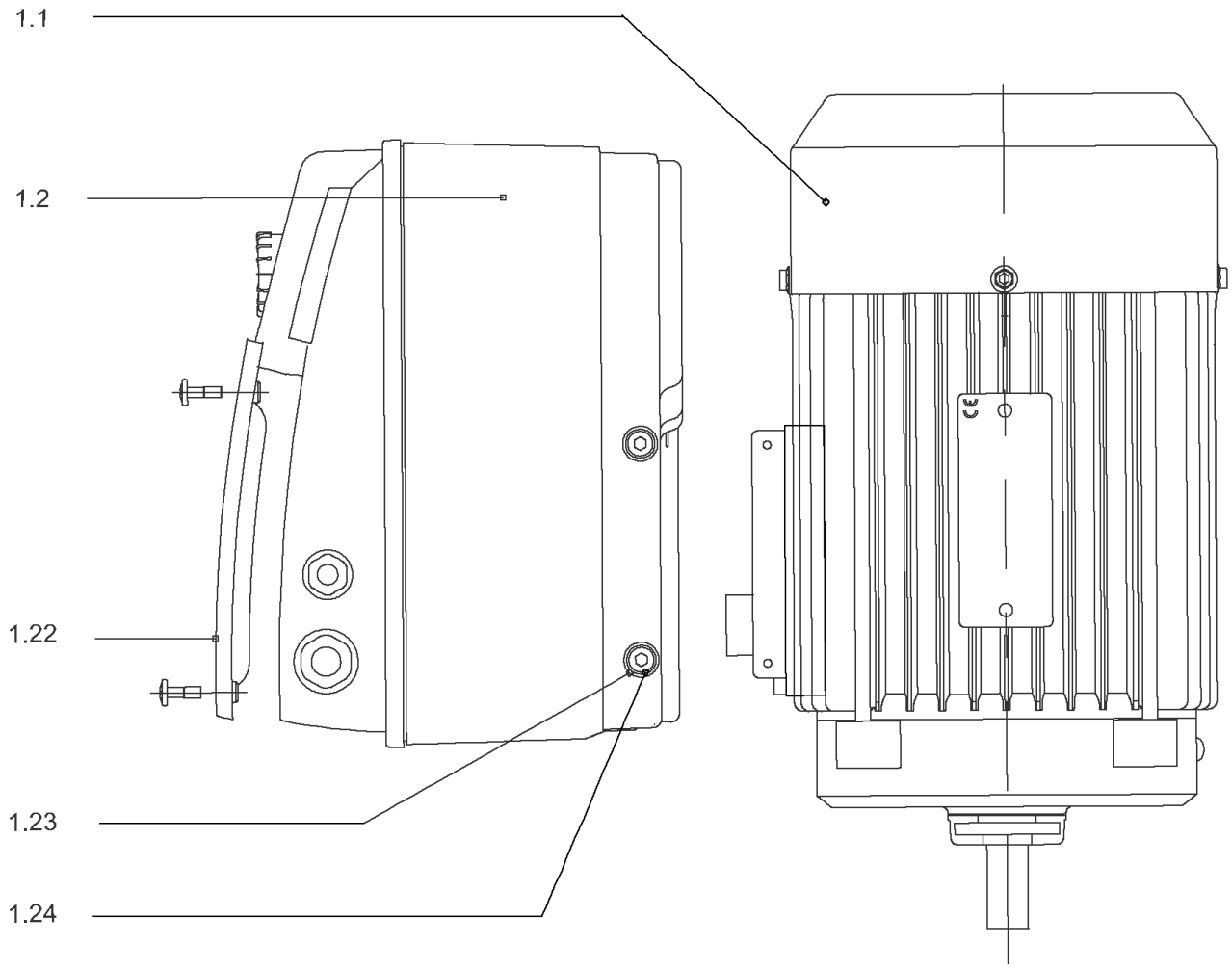
1.1
1.2
1.22
1.23
1.24

## DRIVE HELIXVE3602-7Kw-FF240 IE4-WE KIT

| Item | Article no. | Description | Quantity |
|---|---|---|---|
| 1.1 | 4207940 | MO.7.5/2/132FF240 3~380V 60Hz IE4 WE VP. | 1 |
| | | SPARE PARTS MOTOR:ON REQUEST | 1 |
| 1.2 | 4212640 | MODULE HELIX-VE3602-IE4-WE KIT | 1 |
| 1.22 | 2111344 | > MODULE COVER/GASKET TL5 KIT | 1 |
| 1.23 | 4215716 | > SCREW M5X16 DIN912 8.8 A2A (4pieces) VP. | 1 |
| 1.24 | 2057978 | > RONDELLE A5,3 DIN6797 FST ZN (4 PIECES) | 1 |

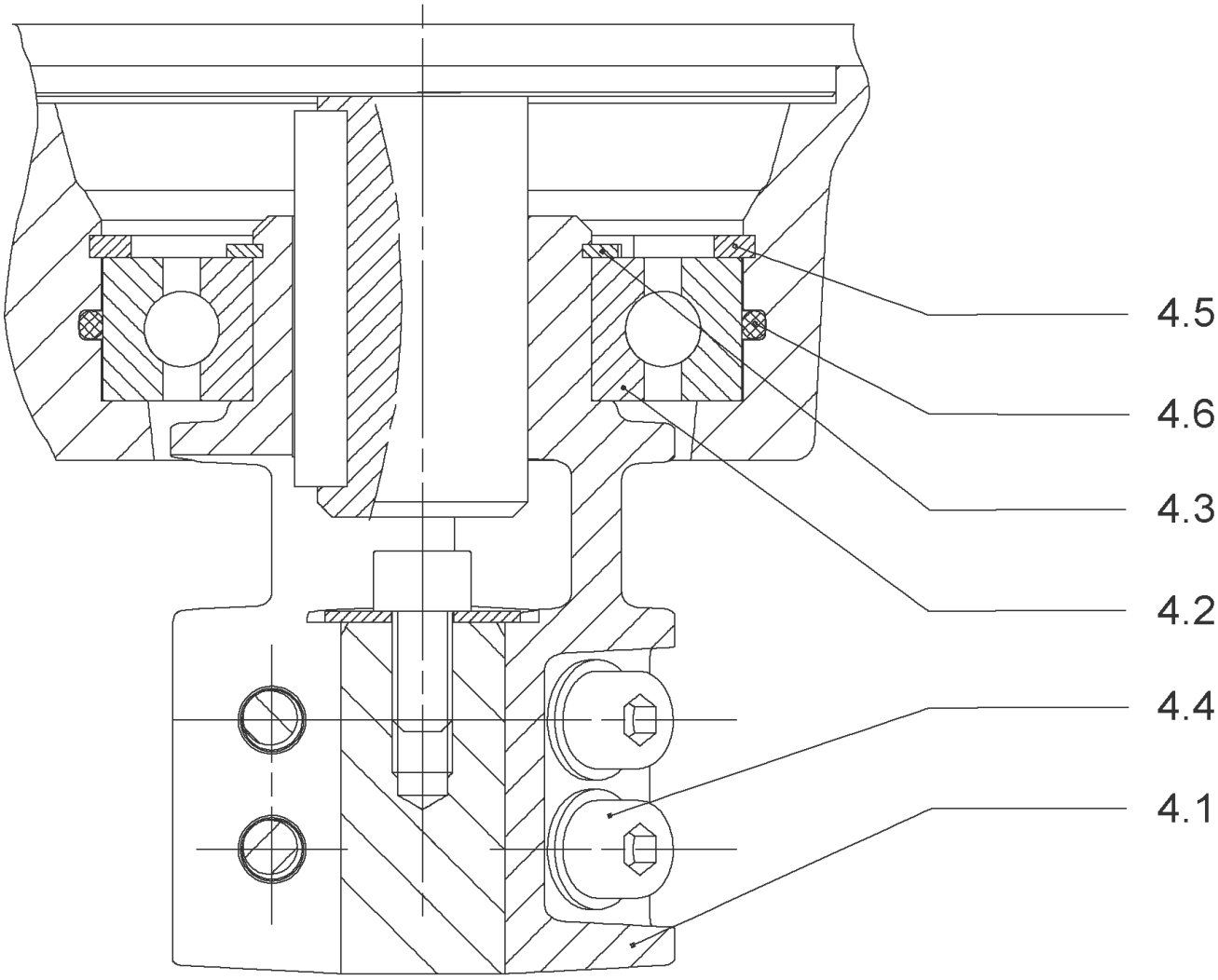
4.5
4.6
4.3
4.2
4.4
4.1

## COUPLING D.22XD.38 FF240T130 HELIX KIT (4186347)

| Item | Article no. | Description | Quantity |
|---|---|---|---|
| 4.1 | | COUPLING-VMI-D22xD38-FF265-MACHINED | 1 |
| 4.2 | 2131017 | BALL BEARING 6310/ZZ-C4(HT)VP. | 1 |
| 4.3 | 4234253 | CIRCLIP-FOR-SHAFT-D50x2 VP. | 1 |
| 4.4 | 4157726 | SCREW KIT M8X30 (4 PIECES) | 1 |
| 4.5 | 4234255 | CIRCLIPS 110X4 VP. | 1 |
| 4.6 | 4233944 | O-RING ID.110 VP. | 1 |
| | | NOMEL CONTACT WASHER 8x16x1,4 STEEL ZC | 1 |

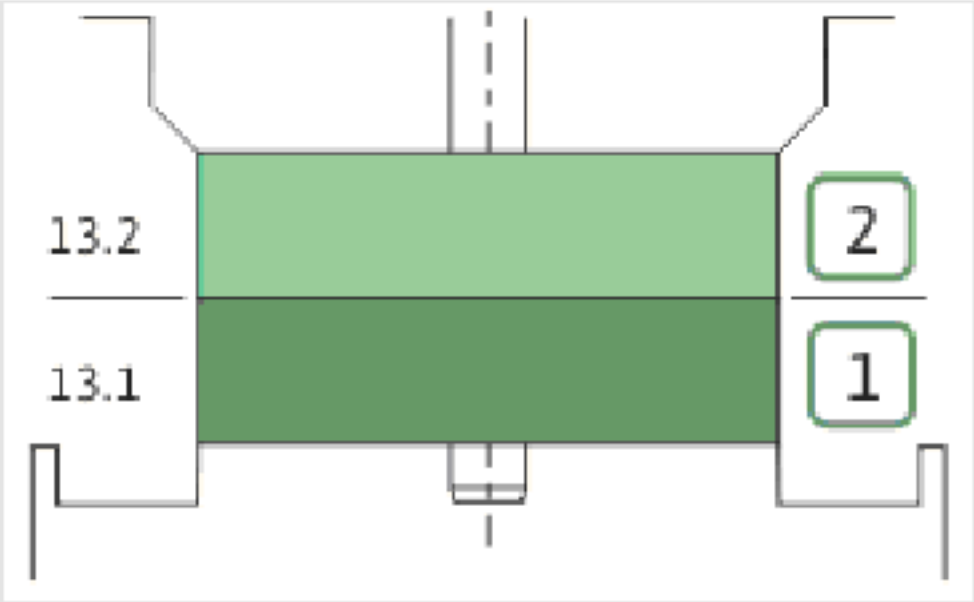
13.2
13.1
2
1

| Item | Article no. | Description | Quantity |
|---|---|---|---|
| 13.1 | 4161192 | INTERMEDIATE STAGE HELIX V36 1.4301 KIT | 1 |
| | | > SLEEVE-SPACER-D22XL16,66-316L | 1 |
| | | > MACH.BEARING-DIFFUSER+NR-M+36-304 | 1 |
| | | > SHAFT-SLEEVE-D26xD22x16-CW | 1 |
| | | > IMPELLER-H1-M+36-304 | 1 |
| 13.1A | 4161200 | > NECK RING 1.STAGE HELIX V36/52 KIT | 1 |
| | | >> NECK-RING-M+36/52 | 1 |
| | | >> HYDRAULIC SUPPORT CAP M+36/52 304 | 1 |
| | | >> SCREW TCL M3X8 A4 POZIDRIV | 1 |
| 13.2 | 4161194 | UPPER STAGE HELIX 36 1.4301 KIT | 1 |
| | | > STOP COLLAR OF IMPELLER L20-Ø22-316L | 1 |
| | | > IMPELLER-H4-M+36-304 | 1 |
| | | > MACH.-RIGID-STD-DISCH.-CHAMBER-M+36-304 | 1 |

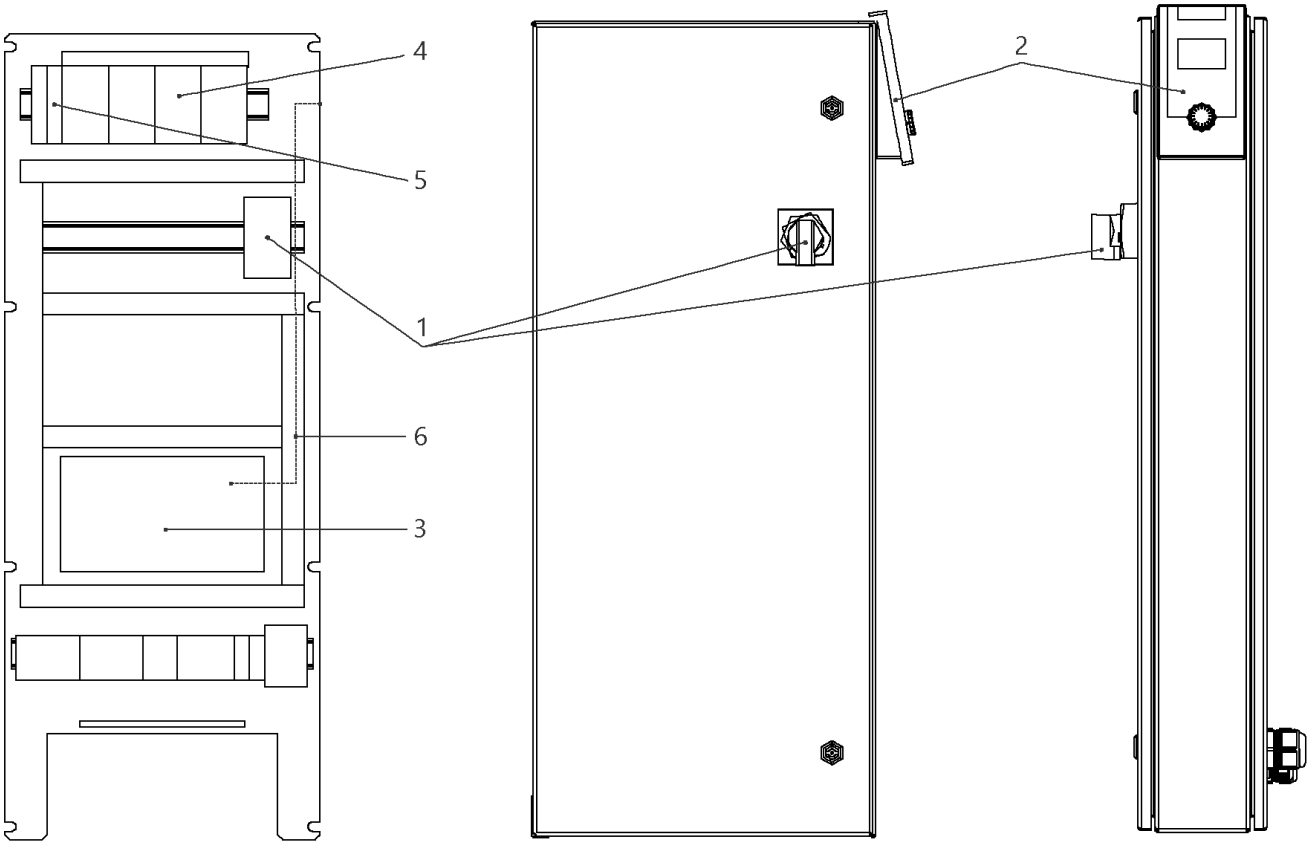
4
5
1
6
3
2

## W-CTRL-SCE-B-4x16A-T34-FM-ND2-AVC-PKG

| Item | Article no. | Description | Quantity |
|---|---|---|---|
| 1 | 2104477 | MAIN SWITCH OT80F3 L105 KIT | 1 |
| 2 | 4184784 | CONTROL PANEL HMI SC KIT | 1 |
| 2 | 4185259 | ASSEMBLY DISPLAY SC PKG VP. | 1 |
| Note: DISPLAY ALONE / PLATINE SEULE | | | |
| 3 | 4185257 | ASSEMBLY CPU SCe Booster VP. | 1 |
| 4 | 4197832 | AUTOMATIC CIRCUIT BREAKER S203 B20 VP. | 1 |
| 5 | 2046288 | CIRCUIT BREAKER S201 B16 | 1 |
| 6 | 4194956 | PATCH CABLE RJ45 CAT6 1,0M BLUE SC-PANEL | 1 |

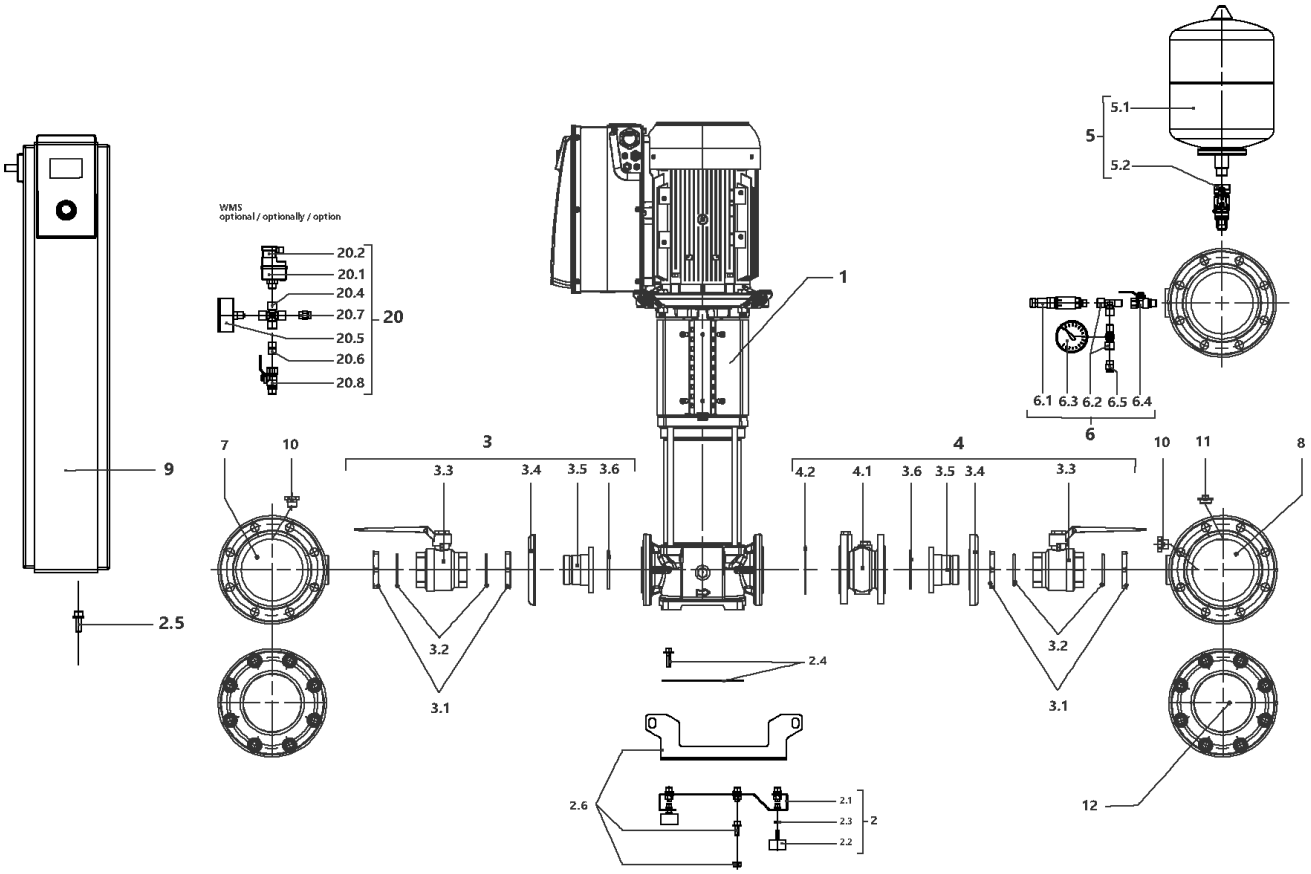
WMS
optional / optionally / option
20.2
20.1
20.4
20.7
20.5
20.6
20.8
20
1
5.1
5
5.2
6.1 6.3 6.2 6.5 6.4
6
9
7
10
3
3.3
3.4
3.5 3.6
4.2
4.1
3.6 3.5 3.4
4
10
11
8
2.5
3.2
3.1
2.4
2.6
2.1
2.3
2.2
2
12

## SiBoost Smart 4HELIX VE3604 (2540923)

| Item | Article no. | Description | Quantity |
|---|---|---|---|
| 1 | | HELIX VE3604-4/16/E/KS/2G | 1 |
| 2 | 4204917 | BASE PLATE DE4 2250x420 M10 KIT | 1 |
| 2.1 | | > BASE_FR_4x22/36/52V_E500_L400_BOX150-250 | 1 |
| 2.2 | 2027881 | > VIBRATION DAMPER M.10X20 D.70 | 1 |
| 2.3 | 2028281 | > NUT M10 DIN936 (ISO4035) 17H VZ | 1 |
| 2.4 | 4204891 | > HOLDER PUMP Siboost Smart V36/52 KIT | 1 |
| 2.5 | 4197084 | > HOLDER SWITCHBOX WILO Smart Control KIT | 1 |
| 2.6 | 4203979 | > LIFTING Siboost HELIX 22/36 KIT | 1 |
| 3 | 4204892 | SUCTION SIDE Siboost Helix 36 KIT | 1 |
| 3.1 | 2027123 | > NUT G2½ X15 MS | 1 |
| 3.2 | 2025969 | > O-RING ID.72,39x5,33 EPDM 70SHORE | 1 |
| 3.2 | | > VALVE-BS-2"1/2-F/F-PS25-BRASS-NICK-ACS | 1 |
| 3.4 | 2032973 | > LAPPED FLANGE DN65 1.4301 DIN2642P | 1 |
| 3.5 | | > UNION INSERT DN65-G21/2" FLANGE AISI304 | 1 |
| 3.6 | 2028296 | > O-RING ID.91,44x5,33 EPDM 70SHORE | 1 |
| 4 | 4204894 | DELIVERY SIDE Siboost Helix 36 KIT | 1 |
| 3.1 | 2027123 | > NUT G2½ X15 MS | 1 |
| 3.2 | 2025969 | > O-RING ID.72,39x5,33 EPDM 70SHORE | 1 |
| 3.3 | | > VALVE-BS-2"1/2-F/F-PS25-BRASS-NICK-ACS | 1 |
| Note: accessories see price list/Zubehör siehe | | | |
| 3.4 | 2032973 | > LAPPED FLANGE DN65 1.4301 DIN2642P | 1 |
| 3.5 | | > UNION INSERT DN65-G21/2" FLANGE AISI304 | 1 |
| Note: accessories see price list/Zubehör siehe | | | |
| 3.6 | 2028296 | > O-RING ID.91,44x5,33 EPDM 70SHORE | 1 |
| 4.1 | 2127586 | > NON RETURN VALVE DN65 PN16 TYP402B VP. | 1 |
| 4.2 | 2119912 | > GASKET D.77/127X2 DN65 C4430 VP. | 1 |
| 5 | 4203983 | DIAPHREM TANK 8L/PN16 DIN4807/T5 KIT | 1 |
| 5.1 | 2045914 | > DIAPHREM TANK 8L TYP-DD 16BAR | 1 |
| 5.2 | 4189350 | > FLOW FITTING G3/4 FOR DIAPHRAG VESSEL VP | 1 |
| 6 | 4197076 | PRESSURE SENSOR/ GAUGE 0-16BAR KIT | 1 |
| 6.1 | 2085909 | > PRESS.SENSOR 1/4" 0-16BAR 4-20MA VP. | 1 |
| 6.2 | 4197077 | > T-PIECE 1/4" VP. | 1 |
| 6.3 | 2028692 | > PRESSURE GAUGE NG63-PN16-G1/4 | 1 |
| 6.4 | 2028291 | > BALL TAP R1/4" PN42 GIACOMINI R254DL | 1 |

| Item | Article no. | Description | Quantity |
|---|---|---|---|
| 6.5 | 2028691 | > BLOWGUN 1/4" MS 30BAR VP. | 1 |
| 7 | 4204918 | PIPE DE4 DN150-4x21/2"+3x1/4x1400 VP. | 1 |
| 8 | 4204919 | PIPE DE4 DN150-4x21/2"+2x1/4+1x3/4x1400 | 1 |
| 9 | | W-CTRL-SCE-B-4x24A-T34-FM-ND4-AVC-PKG | 1 |
| 10 | 4197079 | PLUG G1/4"x10 AISI304 KIT | 1 |
| 11 | 2032654 | PLUG R3/4" MS VIEGA 1751 | 1 |
| 12 | 4204916 | BLIND-FLANGE DN150 PN10/16-A2 KIT | 1 |
| | 2135807 | > FLAT GASKET D.169/224x2 DN150 C4430 VP. | 1 |
| | | > NUT M20 DIN934 A2 1.4301 | 1 |
| | | > Screw M20X80 ISO4014 A4 | 1 |
| | | > WASHER A21 DIN125 A2 1.4301 | 1 |
| | | > FULL FLANGE ST.DN150 PN16 EN1092-1/05 A2 | 1 |
| | | > FLANGE COVER DN150 DIN 3443 FORM A | 1 |
| 20 | | ASSEMBLY WMS. DE-EB. +VP | 1 |
| 20.1 | 2028652 | > PRESSURE SWITCH PS3-ASR 1/(1,3) VP. | 1 |
| 20.2 | 2130983 | > PLUG PS3-415 WITH KABEL 1,5M 2NO VP. | 1 |
| 20.4 | 2028290 | > CROSSPIECE R1/4" MS-NICKEL | 1 |
| 20.5 | 2028687 | > PRESSURE GAUGE NG63 R1/4" HI.0-6BAR | 1 |
| 20.6 | 2054268 | > DUAL NIPPLE G1/4" x G1/4" MS VP. | 1 |
| 20.7 | 2028691 | > BLOWGUN 1/4" MS 30BAR VP. | 1 |
| 20.8 | 2028291 | > BALL TAP R1/4" PN42 GIACOMINI R254DL | 1 |

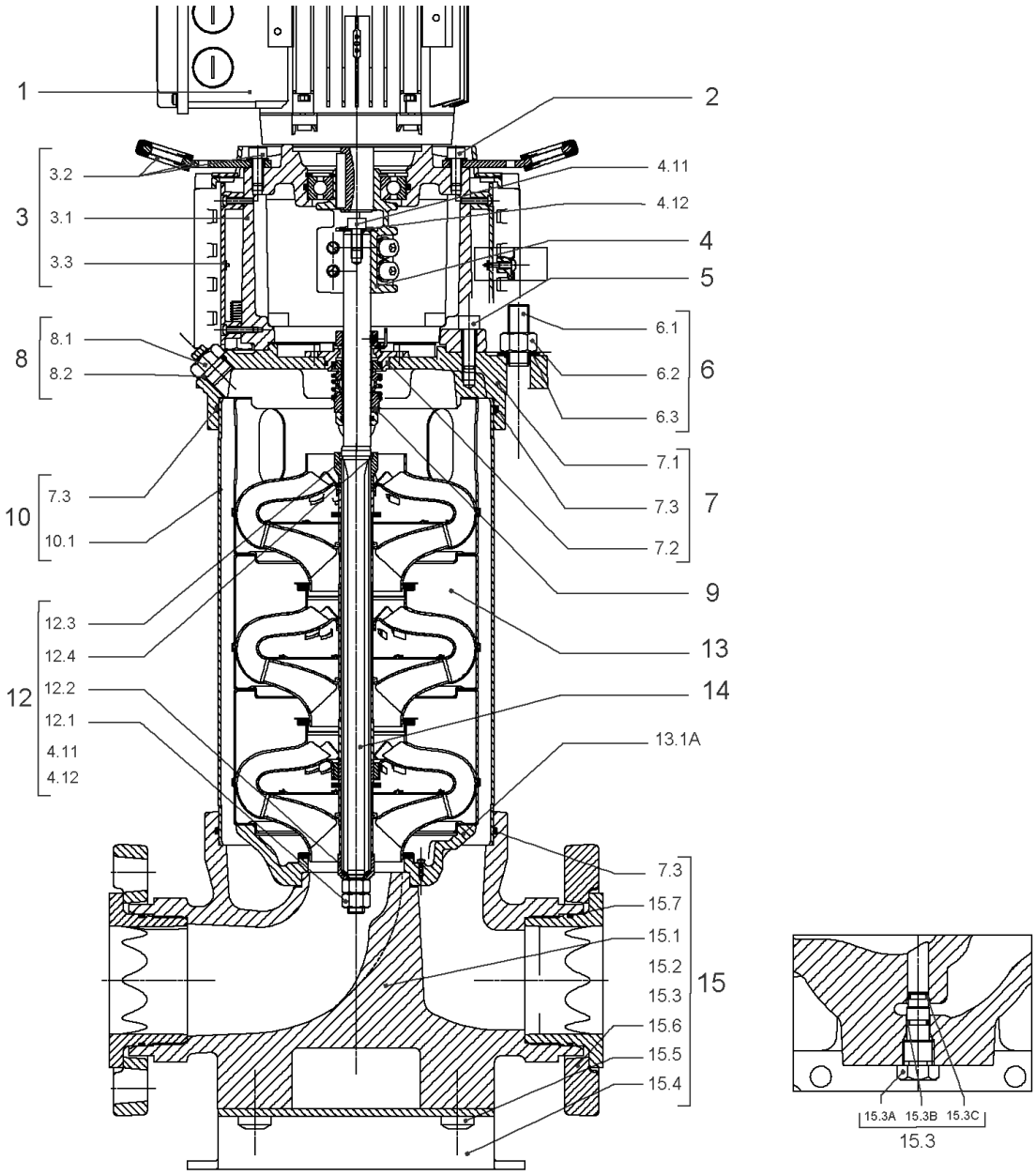
1
2
3
3.2
3.1
3.3
4.11
4.12
4
5
8
8.1
8.2
6.1
6.2
6.3
6
7.1
7.3
7.2
7
10
7.3
10.1
9
12.3
12.4
12.2
12.1
4.11
4.12
12
13
14
13.1A
7.3
15.7
15.1
15.2
15.3
15.6
15.5
15.4
15
15.3A
15.3B
15.3C
15.3

| Item | Article no. | Description | Quantity |
|---|---|---|---|
| 1 | | DRIVE HELIX VE3604-IE2-ARC KIT | 1 |
| Note: no longer available/nicht mehrlieferbar/n'est plus disponible | | | |
| 1 | 4218537 | DRIVE HELIX VE3604-IE4-WEG KIT | 1 |
| Note: MOTOR BRAND WEG | | | |
| 2 | 4179586 | SCREW M16X60 (4 PIECES) | 1 |
| 3 | 4157721 | LANTERN HELIX 22/36 FF300 BB6312 KIT | 1 |
| 3.1 | | > LANTERN FF300 M+ GJL MACHINED+CATA 6312 | 1 |
| 3.2 | 4179589 | > EYELET CPL.FF300 HELIX(4 PIECES) | 1 |
| 3.3 | 4143969 | > COUPLING PROTECT HELIX FF KIT | 1 |
| 4 | 4143966 | COUPLING D.20XD.38 FF300 KIT | 1 |
| 5 | 4157725 | SCREW M10X40 (4 PIECES) | 1 |
| 6 | 4179592 | STUD BOLT M16X405 KIT | 1 |
| 6.1 | | > TIE BOLT M16-405x24x44-1.4057 | 1 |
| 6.2 | 4179562 | > NUT M16 8.8 ISO4032 (4 PIECES) | 1 |
| 6.3 | 4097852 | > WASHER-CS-16.4-32-2.8-NFE25-511-A2 | 1 |
| 7 | 4179565 | END SHIELD HELIX 8'' EPDM KIT | 1 |
| 7.1 | | > END SHIELD M+ GJL MACHINED+CATA | 1 |
| 7.2 | 4179564 | > O-RING D.42.52x2.62 EPDM VP. | 1 |
| 7.3 | 4179571 | > O-RING HOUSING PIPE HELIX22/36/52 VP. | 1 |
| 8 | 4186377 | FILING/PURGING PLUG 304 HELIX KIT | 1 |
| 8.1 | | > FILLING/VENTING-PLUG-MVI8/10"-304 | 1 |
| 8.2 | 4032291 | > O-RING 17x3 EPDM KTW/WRC | 1 |
| 9 | 4143973 | CARTRIDGE HELIX22-36-52 O/E KIT | 1 |
| 10 | 4179593 | HOUSING PIPE D.204X330 1.4307 KIT | 1 |
| 7.3 | 4179571 | > O-RING HOUSING PIPE HELIX22/36/52 VP. | 1 |
| 10.1 | | > HOUSING-PIPE Ø204-M+3604/5203-304 | 1 |
| 11 | 4181071 | CENTRALIZER HELIX 8'' M+36 1.4301 VP. | 1 |
| 12 | 4161186 | SHAFT EQUIPMENT HELIX V36 8'' KIT | 1 |
| 13 | | HYDRAULIC HELIX V 3604 | 1 |
| 14 | 2123751 | SHAFT D.22 LG.487,34 HELIX 1.4057 VP. | 1 |
| 15 | 4186381 | EQUIPED HOUSING HELIX OPTI DN65 GJL KIT | 1 |
| 15.1 | | > PUMP CASING MONO.M+8" DN65 PN16 DWA | 1 |
| 15.2 | | > HYD.SUP.M+8" MONO.HOUSING DN65 DWA | 1 |
| 15.3 | 4106048 | > DRAIN/PRIMING PLUG EPDM HELIX FIRST KIT | 1 |

| Item | Article no. | Description | Quantity |
|---|---|---|---|
| 15.3A | | >> DRAIN AND PRIMING PLUG-VMI10"-304 | 1 |
| 15.3B | 4032293 | >> O-RING-10x3-EPDM-KTW/WRC | 1 |
| 15.3C | 4233957 | >> O-RING ID.9 EPDM VP. | 1 |
| 7.3 | 4179571 | > O-RING HOUSING PIPE HELIX22/36/52 VP. | 1 |
| 13.1A | 4161200 | > NECK RING 1.STAGE HELIX V36/52 KIT | 1 |
| | | >> NECK-RING-M+36/52 | 1 |
| | | >> HYDRAULIC SUPPORT CAP M+36/52 304 | 1 |
| | | >> SCREW TCL M3X8 A4 POZIDRIV | 1 |

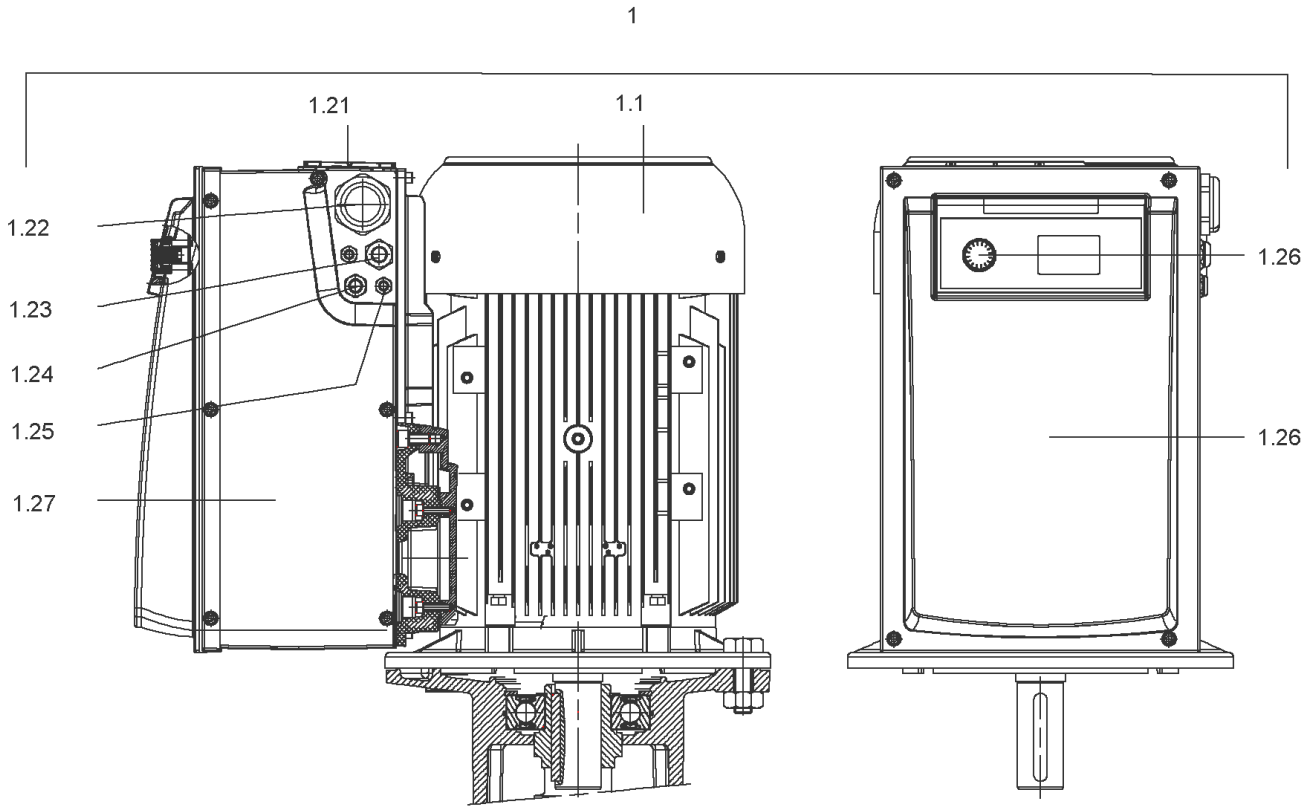
1
1.21
1.1
1.22
1.23
1.24
1.25
1.27
1.26
1.26

## DRIVE HELIX VE3604-IE2-ARC KIT

| Item | Article no. | Description | Quantity |
|---|---|---|---|
| 1.1 | | M11-2T540P55V1-160F300-N42-IE2 | 1 |
| | | SPARE PARTS MOTOR:ON REQUEST | 1 |
| 1.21 | 2132102 | FAN SMALL TL6/7 FF KIT | 1 |
| 1.25 | 2132097 | CABLE CONNECTION M12 TL6/7 FF VP. | 1 |
| 1.24 | 2132098 | CABLE CONNECTION M16 TL6/7 FF VP. | 1 |
| 1.23 | 2132099 | CABLE CONNECTION M20 TL6/7 FF VP. | 1 |
| 1.22 | 2132100 | CABLE CONNECTION SMALL M40 TL6/7 FF VP. | 1 |
| 1.27 | 2132104 | COVER SIDE TL6/7 FF CPL.VP. | 1 |
| 1.26 | 2132452 | MODULE COVER/BUTTON TL6/7 FF VP. | 1 |

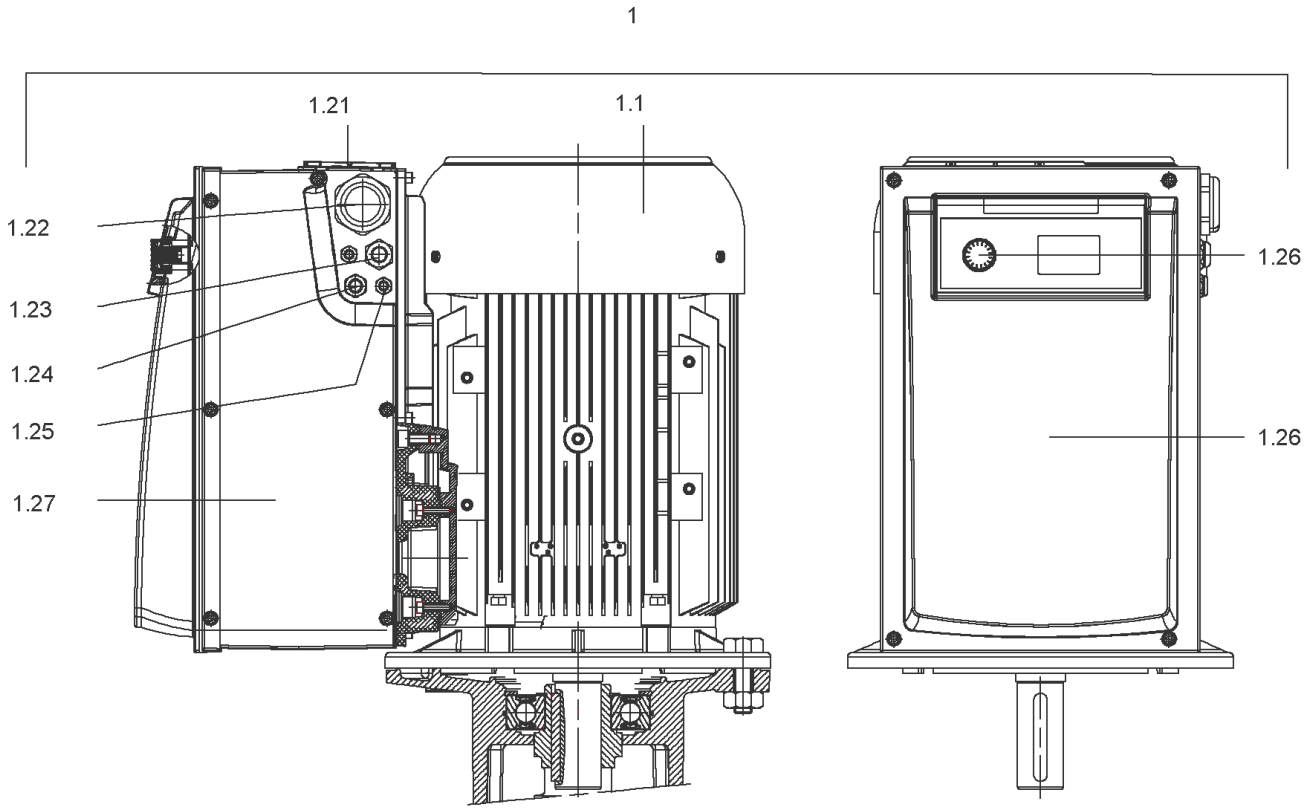
1
1.21
1.1
1.22
1.23
1.24
1.25
1.27
1.26
1.26

## DRIVE HELIX VE3604-IE4-WEG KIT (4218537)

| Item | Article no. | Description | Quantity |
|---|---|---|---|
| 1.1 | | M11-2T540P55V1-160F30-N42-ADAPT-IE4-WEG | 1 |
| | | SPARE PARTS MOTOR:ON REQUEST | 1 |
| 1.21 | 2132102 | FAN SMALL TL6/7 FF KIT | 1 |
| 1.25 | 2132097 | CABLE CONNECTION M12 TL6/7 FF VP. | 1 |
| 1.24 | 2132098 | CABLE CONNECTION M16 TL6/7 FF VP. | 1 |
| 1.23 | 2132099 | CABLE CONNECTION M20 TL6/7 FF VP. | 1 |
| 1.22 | 2132100 | CABLE CONNECTION SMALL M40 TL6/7 FF VP. | 1 |
| 1.27 | 2132104 | COVER SIDE TL6/7 FF CPL.VP. | 1 |
| 1.26 | 2132452 | MODULE COVER/BUTTON TL6/7 FF VP. | 1 |

## COUPLING D.20XD.38 FF300 KIT (4143966)

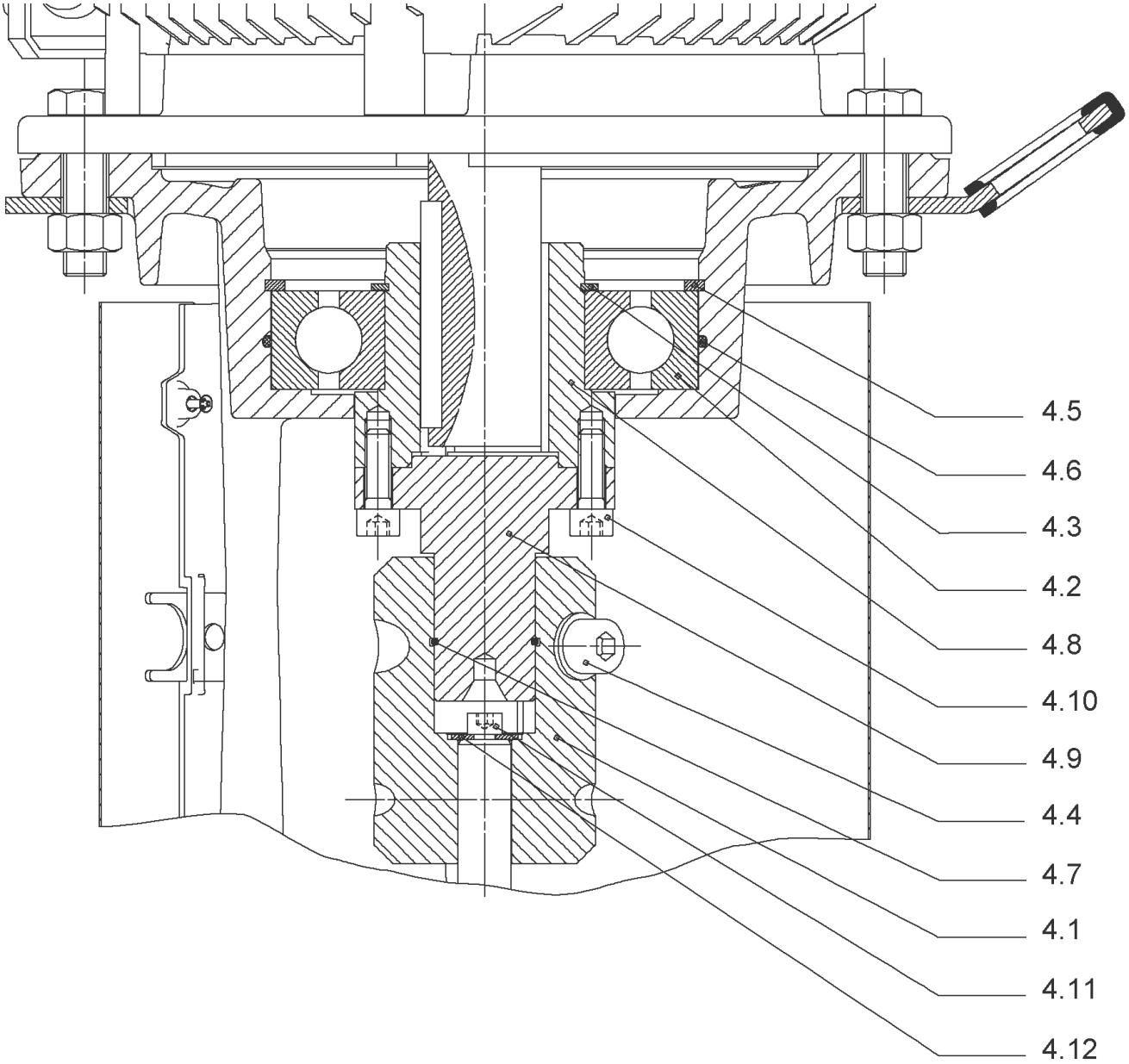

## COUPLING D.20XD.38 FF300 KIT (4143966)

| Item | Article no. | Description | Quantity |
|---|---|---|---|
| 4.1 | 4179590 | COUPLING 2 PARTS D.20XD.38XL115 VP. | 1 |
| 4.2 | 2123699 | BALL BEARING 6312/2Z-C4 (HT) VP. | 1 |
| 4.3 | 63428 | CIRCLIP-FOR-SHAFT-D60x2 | 1 |
| 4.4 | 2130991 | SCREW M12X30 ISO4762 8.8 ZN(4 PIECES) | 1 |
| 4.5 | 4032277 | CIRCLIP-HOLE-130x4 | 1 |
| 4.6 | 4006725 | O-RING ID.132,94x3,53 NBR70SR | 1 |
| 4.7 | 2130992 | RETAINING RING D.35xD.2,5 DIN7993 VP. | 1 |
| 4.8 | 4179591 | HUB D.42xD.60 VP. | 1 |
| 4.9 | 2130994 | SPACER D.38XD.55 VP. | 1 |
| 4.10 | 4094462 | SCREWS M10 ( 4 PIECES ) | 1 |
| 4.11 | 4233959 | SCREW M8x16 VP. | 1 |
| 4.12 | | SERRATED LOCK WASHER Ø8.2XØ25X35X2 | 1 |

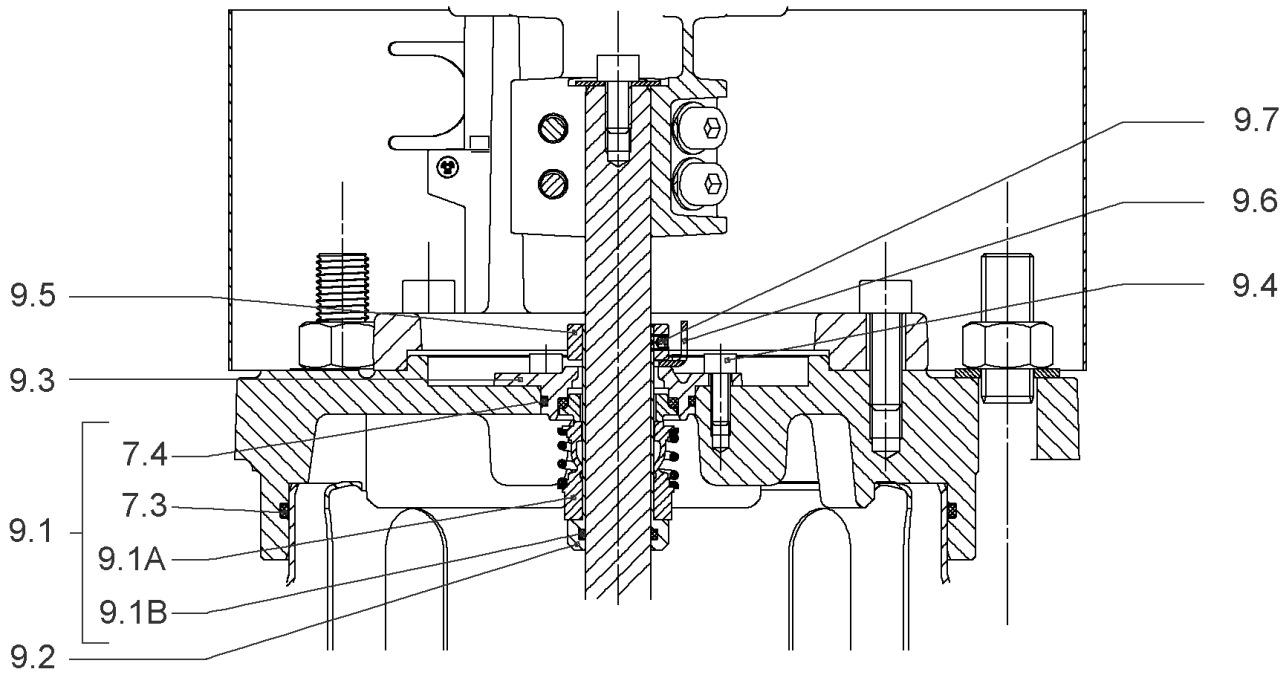
9.7
9.6
9.4
9.5
9.3
7.4
7.3
9.1
9.1A
9.1B
9.2

## CARTRIDGE HELIX22-36-52 O/E KIT (4143973)

| Item | Article no. | Description | Quantity |
|---|---|---|---|
| 9.1 | 4143974 | SEAL-KIT-HELIX22-36-52 O/E | 1 |
| 7.3 | 4179571 | > O-RING HOUSING PIPE HELIX22/36/52 VP. | 1 |
| 7.4 | 4179572 | > O-RING ID.42.52X2.62 EPDM VP. | 1 |
| 9.1A | 4179573 | > M.SEAL.HELIX22-36-52 O/E VP. | 1 |
| 9.1B | 4179574 | > O-RING ID.20x2.65 EPDM VP. | 1 |
| 9.2 | 4179566 | SHAFT SLEEVE D.20/20X60 1.4404 VP. | 1 |
| 9.3 | 4179567 | RING HOLDER Ø22 1.4301 VP. | 1 |
| 9.4 | 4176520 | SCREW CH M5x5 A4-70 ( 3PIECES ) | 1 |
| 9.5 | 4179568 | DRIVE RING D.31/22.1x11 MACH.VP. | 1 |
| 9.6 | 4179569 | TOOL M.S.CART.HELIX 8'' VP. | 1 |
| 9.7 | 4179570 | SCREW M6X16 ISO4762 8.8 GEOMET(4 PIECES) | 1 |

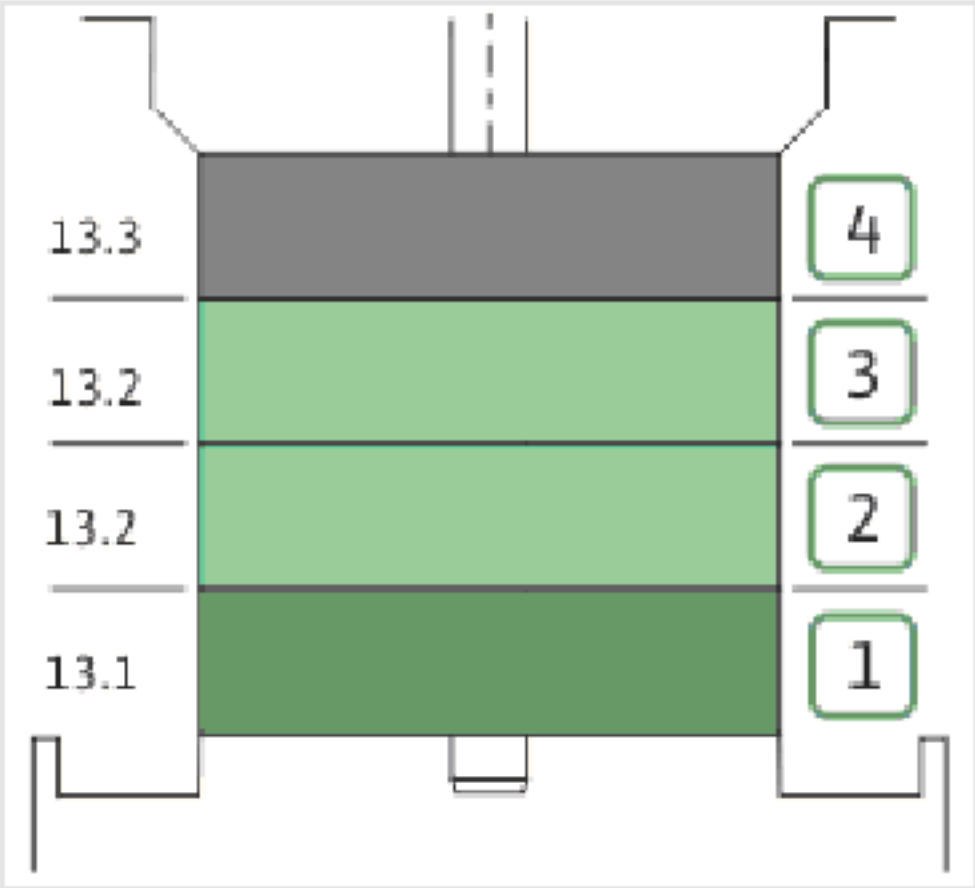
13.3
13.2
13.2
13.1
4
3
2
1

| Item | Article no. | Description | Quantity |
|---|---|---|---|
| 13.1 | 4161192 | INTERMEDIATE STAGE HELIX V36 1.4301 KIT | 1 |
| | | > SLEEVE-SPACER-D22XL16,66-316L | 1 |
| | | > MACH.BEARING-DIFFUSER+NR-M+36-304 | 1 |
| | | > SHAFT-SLEEVE-D26xD22x16-CW | 1 |
| | | > IMPELLER-H1-M+36-304 | 1 |
| 13.1A | 4161200 | > NECK RING 1.STAGE HELIX V36/52 KIT | 1 |
| | | >> NECK-RING-M+36/52 | 1 |
| | | >> HYDRAULIC SUPPORT CAP M+36/52 304 | 1 |
| | | >> SCREW TCL M3X8 A4 POZIDRIV | 1 |
| 13.2 | 4161193 | INTERMEDIATE STAGE HELIX V36 1.4301 KIT | 1 |
| | | > MACH.STD-DIFFUSER+NR-M+36-304 | 1 |
| | | > IMPELLER-H4-M+36-304 | 1 |
| 13.3 | 4161194 | UPPER STAGE HELIX 36 1.4301 KIT | 1 |
| | | > STOP COLLAR OF IMPELLER L20-Ø22-316L | 1 |
| | | > IMPELLER-H4-M+36-304 | 1 |
| | | > MACH.-RIGID-STD-DISCH.-CHAMBER-M+36-304 | 1 |

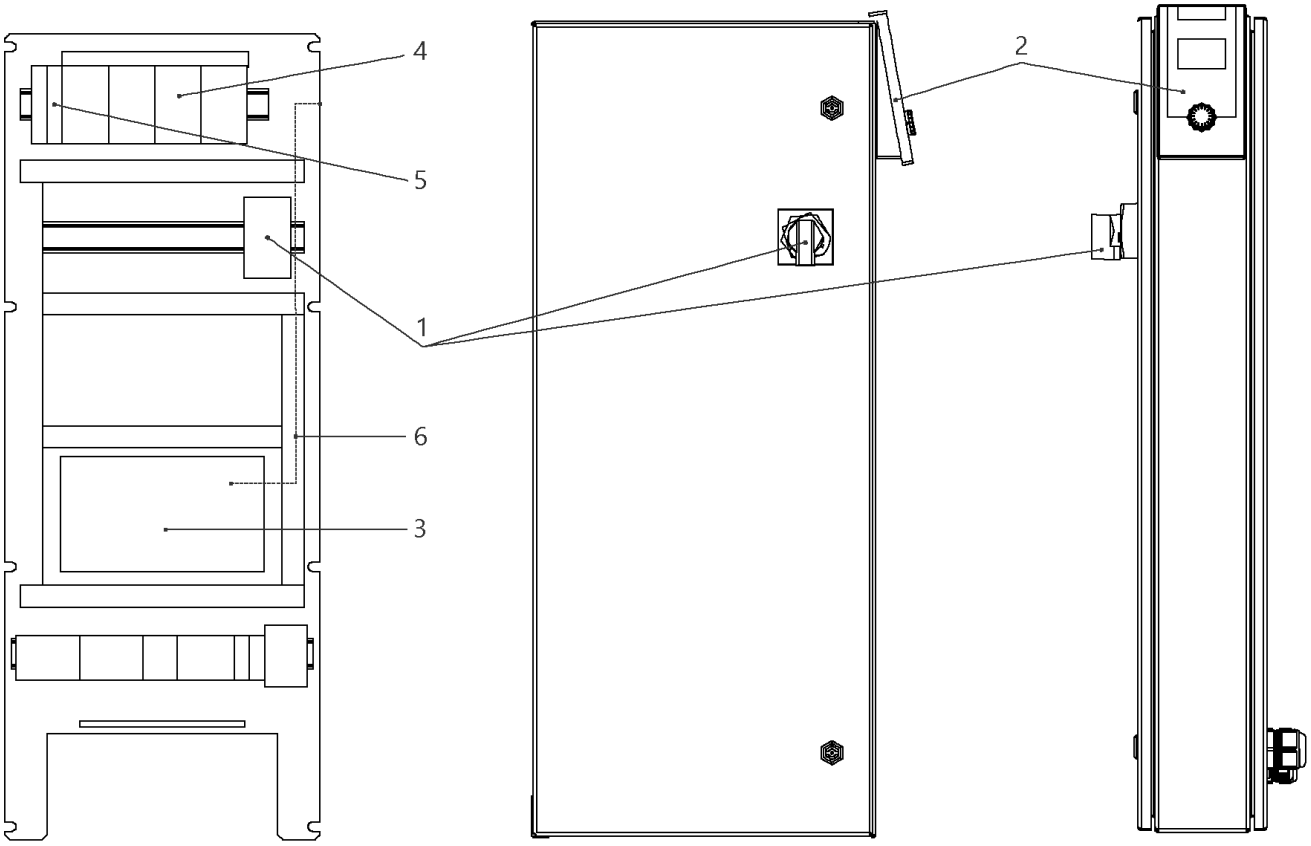
4
5
1
6
3
2

## W-CTRL-SCE-B-4x24A-T34-FM-ND4-AVC-PKG

| Item | Article no. | Description | Quantity |
|---|---|---|---|
| 1 | 2104468 | MAIN SWITCH OT125F3 L250 KIT | 1 |
| 2 | 4184784 | CONTROL PANEL HMI SC KIT | 1 |
| 2 | 4185259 | ASSEMBLY DISPLAY SC PKG VP. | 1 |
| Note: DISPLAY ALONE / PLATINE SEULE | | | |
| 3 | 4185257 | ASSEMBLY CPU SCe Booster VP. | 1 |
| 4 | 2051219 | AUTOM.CIRCUIT BREAKER S203 B32 FOR 15kW | 1 |
| 5 | 2046288 | CIRCUIT BREAKER S201 B16 | 1 |
| 6 | 4204004 | PATCH CABLE RJ45 CAT6 1,5M GREY SC-PANEL | 1 |

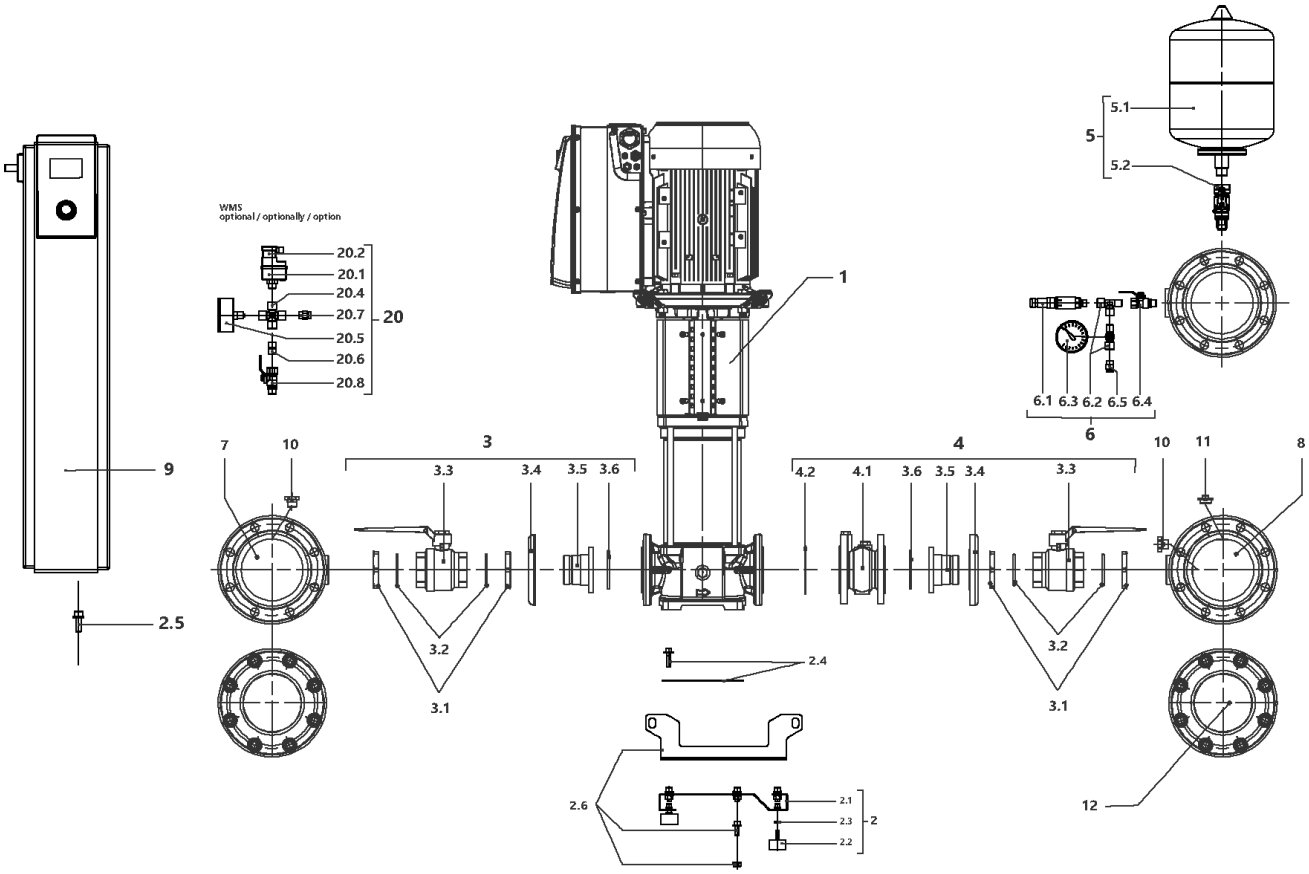
WMS
optional / optionally / option
20.2
20.1
20.4
20.7
20.5
20.6
20.8
20
1
5.1
5
5.2
6.1 6.3 6.2 6.5 6.4
6
9
7
10
3
3.3
3.4
3.5 3.6
4
4.2
4.1
3.6 3.5 3.4
3.3
10
11
8
2.5
3.2
3.1
2.4
3.2
3.1
2.6
2.1
2.3
2.2
2
12

## SiBoost Smart 4HELIX VE3605 (2540924)

| Item | Article no. | Description | Quantity |
|---|---|---|---|
| 1 | | HELIX VE3605-4/16/E/KS/2G | 1 |
| 2 | 4204917 | BASE PLATE DE4 2250x420 M10 KIT | 1 |
| 2.1 | | > BASE_FR_4x22/36/52V_E500_L400_BOX150-250 | 1 |
| 2.2 | 2027881 | > VIBRATION DAMPER M.10X20 D.70 | 1 |
| 2.3 | 2028281 | > NUT M10 DIN936 (ISO4035) 17H VZ | 1 |
| 2.4 | 4204891 | > HOLDER PUMP Siboost Smart V36/52 KIT | 1 |
| 2.5 | 4197084 | > HOLDER SWITCHBOX WILO Smart Control KIT | 1 |
| 2.6 | 4203979 | > LIFTING Siboost HELIX 22/36 KIT | 1 |
| 3 | 4204892 | SUCTION SIDE Siboost Helix 36 KIT | 1 |
| 3.1 | 2027123 | > NUT G2½ X15 MS | 1 |
| 3.2 | 2025969 | > O-RING ID.72,39x5,33 EPDM 70SHORE | 1 |
| 3.2 | | > VALVE-BS-2"1/2-F/F-PS25-BRASS-NICK-ACS | 1 |
| 3.4 | 2032973 | > LAPPED FLANGE DN65 1.4301 DIN2642P | 1 |
| 3.5 | | > UNION INSERT DN65-G21/2" FLANGE AISI304 | 1 |
| 3.6 | 2028296 | > O-RING ID.91,44x5,33 EPDM 70SHORE | 1 |
| 4 | 4204894 | DELIVERY SIDE Siboost Helix 36 KIT | 1 |
| 3.1 | 2027123 | > NUT G2½ X15 MS | 1 |
| 3.2 | 2025969 | > O-RING ID.72,39x5,33 EPDM 70SHORE | 1 |
| 3.3 | | > VALVE-BS-2"1/2-F/F-PS25-BRASS-NICK-ACS | 1 |
| Note: accessories see price list/Zubehör siehe | | | |
| 3.4 | 2032973 | > LAPPED FLANGE DN65 1.4301 DIN2642P | 1 |
| 3.5 | | > UNION INSERT DN65-G21/2" FLANGE AISI304 | 1 |
| Note: accessories see price list/Zubehör siehe | | | |
| 3.6 | 2028296 | > O-RING ID.91,44x5,33 EPDM 70SHORE | 1 |
| 4.1 | 2127586 | > NON RETURN VALVE DN65 PN16 TYP402B VP. | 1 |
| 4.2 | 2119912 | > GASKET D.77/127X2 DN65 C4430 VP. | 1 |
| 5 | 4203983 | DIAPHREM TANK 8L/PN16 DIN4807/T5 KIT | 1 |
| 5.1 | 2045914 | > DIAPHREM TANK 8L TYP-DD 16BAR | 1 |
| 5.2 | 4189350 | > FLOW FITTING G3/4 FOR DIAPHRAG VESSEL VP | 1 |
| 6 | 4197076 | PRESSURE SENSOR/ GAUGE 0-16BAR KIT | 1 |
| 6.1 | 2085909 | > PRESS.SENSOR 1/4" 0-16BAR 4-20MA VP. | 1 |
| 6.2 | 4197077 | > T-PIECE 1/4" VP. | 1 |
| 6.3 | 2028692 | > PRESSURE GAUGE NG63-PN16-G1/4 | 1 |
| 6.4 | 2028291 | > BALL TAP R1/4" PN42 GIACOMINI R254DL | 1 |

| Item | Article no. | Description | Quantity |
|---|---|---|---|
| 6.5 | 2028691 | > BLOWGUN 1/4" MS 30BAR VP. | 1 |
| 7 | 4204918 | PIPE DE4 DN150-4x21/2"+3x1/4x1400 VP. | 1 |
| 8 | 4204919 | PIPE DE4 DN150-4x21/2"+2x1/4+1x3/4x1400 | 1 |
| 9 | | W-CTRL-SCE-B-4x32A-T34-FM-ND4-AVC-PKG | 1 |
| 10 | 4197079 | PLUG G1/4"x10 AISI304 KIT | 1 |
| 11 | 2032654 | PLUG R3/4" MS VIEGA 1751 | 1 |
| 12 | 4204916 | BLIND-FLANGE DN150 PN10/16-A2 KIT | 1 |
| | 2135807 | > FLAT GASKET D.169/224x2 DN150 C4430 VP. | 1 |
| | | > NUT M20 DIN934 A2 1.4301 | 1 |
| | | > Screw M20X80 ISO4014 A4 | 1 |
| | | > WASHER A21 DIN125 A2 1.4301 | 1 |
| | | > FULL FLANGE ST.DN150 PN16 EN1092-1/05 A2 | 1 |
| | | > FLANGE COVER DN150 DIN 3443 FORM A | 1 |
| 20 | | ASSEMBLY WMS. DE-EB. +VP | 1 |
| 20.1 | 2028652 | > PRESSURE SWITCH PS3-ASR 1/(1,3) VP. | 1 |
| 20.2 | 2130983 | > PLUG PS3-415 WITH KABEL 1,5M 2NO VP. | 1 |
| 20.4 | 2028290 | > CROSSPIECE R1/4" MS-NICKEL | 1 |
| 20.5 | 2028687 | > PRESSURE GAUGE NG63 R1/4" HI.0-6BAR | 1 |
| 20.6 | 2054268 | > DUAL NIPPLE G1/4" x G1/4" MS VP. | 1 |
| 20.7 | 2028691 | > BLOWGUN 1/4" MS 30BAR VP. | 1 |
| 20.8 | 2028291 | > BALL TAP R1/4" PN42 GIACOMINI R254DL | 1 |

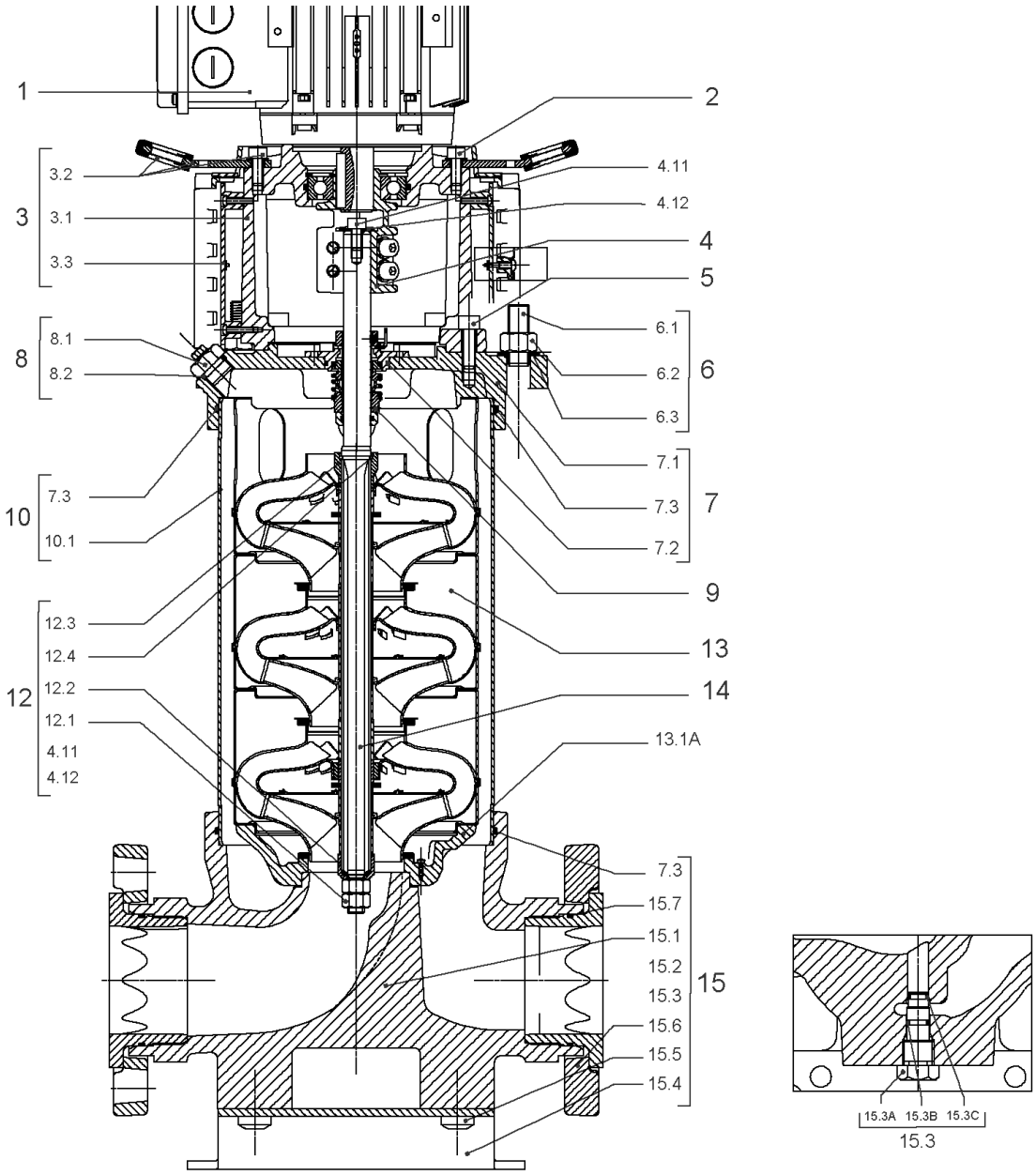
1
2
3
3.2
3.1
3.3
4.11
4.12
4
5
8
8.1
8.2
6.1
6.2
6.3
6
7.1
7.3
7.2
7
10
7.3
10.1
9
12.3
12.4
12.2
12.1
4.11
4.12
12
13
14
13.1A
7.3
15.7
15.1
15.2
15.3
15.6
15.5
15.4
15
15.3A
15.3B
15.3C
15.3

| Item | Article no. | Description | Quantity |
|---|---|---|---|
| 1 | | DRIVE HELIX VE3605-IE2-ARC KIT | 1 |
| Note: no longer available/nicht mehrlieferbar/n'est plus disponible | | | |
| 1 | 4218532 | DRIVE HELIX VE3605-IE4-WEG KIT | 1 |
| Note: MOTOR BRAND WEG | | | |
| 2 | 4179586 | SCREW M16X60 (4 PIECES) | 1 |
| 3 | 4157721 | LANTERN HELIX 22/36 FF300 BB6312 KIT | 1 |
| 3.1 | | > LANTERN FF300 M+ GJL MACHINED+CATA 6312 | 1 |
| 3.2 | 4179589 | > EYELET CPL.FF300 HELIX(4 PIECES) | 1 |
| 3.3 | 4143969 | > COUPLING PROTECT HELIX FF KIT | 1 |
| 4 | 4143966 | COUPLING D.20XD.38 FF300 KIT | 1 |
| 5 | 4157725 | SCREW M10X40 (4 PIECES) | 1 |
| 6 | 4181083 | STUD BOLT M16X466 KIT | 1 |
| 6.1 | | > TIE BOLT M16-466x24x44-1.4057 | 1 |
| 6.2 | 4179562 | > NUT M16 8.8 ISO4032 (4 PIECES) | 1 |
| 6.3 | 4097852 | > WASHER-CS-16.4-32-2.8-NFE25-511-A2 | 1 |
| 7 | 4179565 | END SHIELD HELIX 8'' EPDM KIT | 1 |
| 7.1 | | > END SHIELD M+ GJL MACHINED+CATA | 1 |
| 7.2 | 4179564 | > O-RING D.42.52x2.62 EPDM VP. | 1 |
| 7.3 | 4179571 | > O-RING HOUSING PIPE HELIX22/36/52 VP. | 1 |
| 8 | 4186377 | FILING/PURGING PLUG 304 HELIX KIT | 1 |
| 8.1 | | > FILLING/VENTING-PLUG-MVI8/10"-304 | 1 |
| 8.2 | 4032291 | > O-RING 17x3 EPDM KTW/WRC | 1 |
| 9 | 4143973 | CARTRIDGE HELIX22-36-52 O/E KIT | 1 |
| 10 | 2131084 | HOUSING PIPE D.204x397,44 1.4307 KIT | 1 |
| 7.3 | 4179571 | > O-RING HOUSING PIPE HELIX22/36/52 VP. | 1 |
| 10.1 | | > HOUSING-PIPE Ø204-M+3605-304 | 1 |
| 11 | 4181071 | CENTRALIZER HELIX 8'' M+36 1.4301 VP. | 1 |
| 12 | 4161186 | SHAFT EQUIPMENT HELIX V36 8'' KIT | 1 |
| 13 | | HYDRAULIC HELIX V 3605 | 1 |
| 14 | 4179578 | SHAFT D.22X554 1.4057 VP. | 1 |
| 15 | 4186381 | EQUIPED HOUSING HELIX OPTI DN65 GJL KIT | 1 |
| 15.1 | | > PUMP CASING MONO.M+8" DN65 PN16 DWA | 1 |
| 15.2 | | > HYD.SUP.M+8" MONO.HOUSING DN65 DWA | 1 |
| 15.3 | 4106048 | > DRAIN/PRIMING PLUG EPDM HELIX FIRST KIT | 1 |

| Item | Article no. | Description | Quantity |
|---|---|---|---|
| 15.3A | | >> DRAIN AND PRIMING PLUG-VMI10"-304 | 1 |
| 15.3B | 4032293 | >> O-RING-10x3-EPDM-KTW/WRC | 1 |
| 15.3C | 4233957 | >> O-RING ID.9 EPDM VP. | 1 |
| 7.3 | 4179571 | > O-RING HOUSING PIPE HELIX22/36/52 VP. | 1 |
| 13.1A | 4161200 | > NECK RING 1.STAGE HELIX V36/52 KIT | 1 |
| | | >> NECK-RING-M+36/52 | 1 |
| | | >> HYDRAULIC SUPPORT CAP M+36/52 304 | 1 |
| | | >> SCREW TCL M3X8 A4 POZIDRIV | 1 |

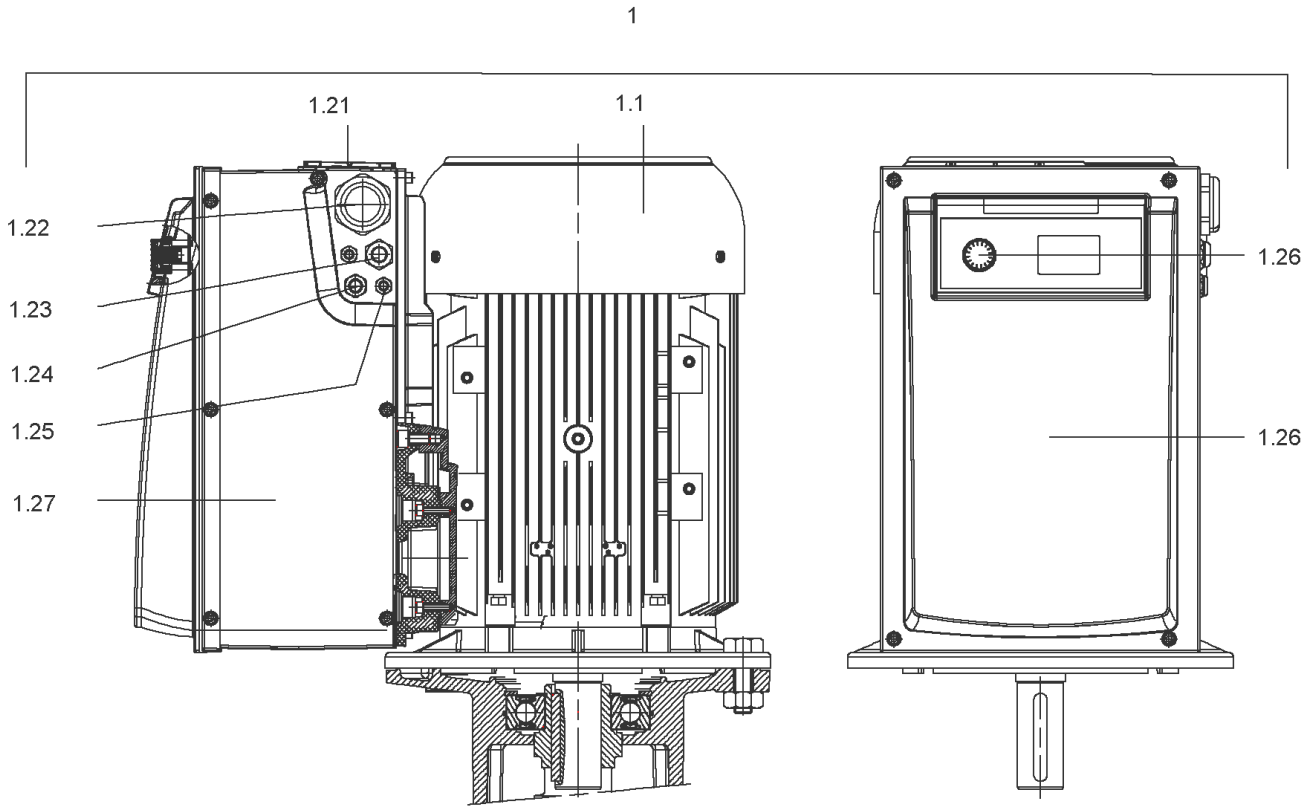
1
1.21
1.1
1.22
1.23
1.24
1.25
1.27
1.26
1.26

## DRIVE HELIX VE3605-IE2-ARC KIT

| Item | Article no. | Description | Quantity |
|---|---|---|---|
| 1.1 | | M15-2T540P55V1-160F300-N42-IE2 | 1 |
| | | SPARE PARTS MOTOR:ON REQUEST | 1 |
| 1.21 | 2132102 | FAN SMALL TL6/7 FF KIT | 1 |
| 1.25 | 2132097 | CABLE CONNECTION M12 TL6/7 FF VP. | 1 |
| 1.24 | 2132098 | CABLE CONNECTION M16 TL6/7 FF VP. | 1 |
| 1.23 | 2132099 | CABLE CONNECTION M20 TL6/7 FF VP. | 1 |
| 1.22 | 2132100 | CABLE CONNECTION SMALL M40 TL6/7 FF VP. | 1 |
| 1.27 | 2132104 | COVER SIDE TL6/7 FF CPL.VP. | 1 |
| 1.26 | 2132452 | MODULE COVER/BUTTON TL6/7 FF VP. | 1 |

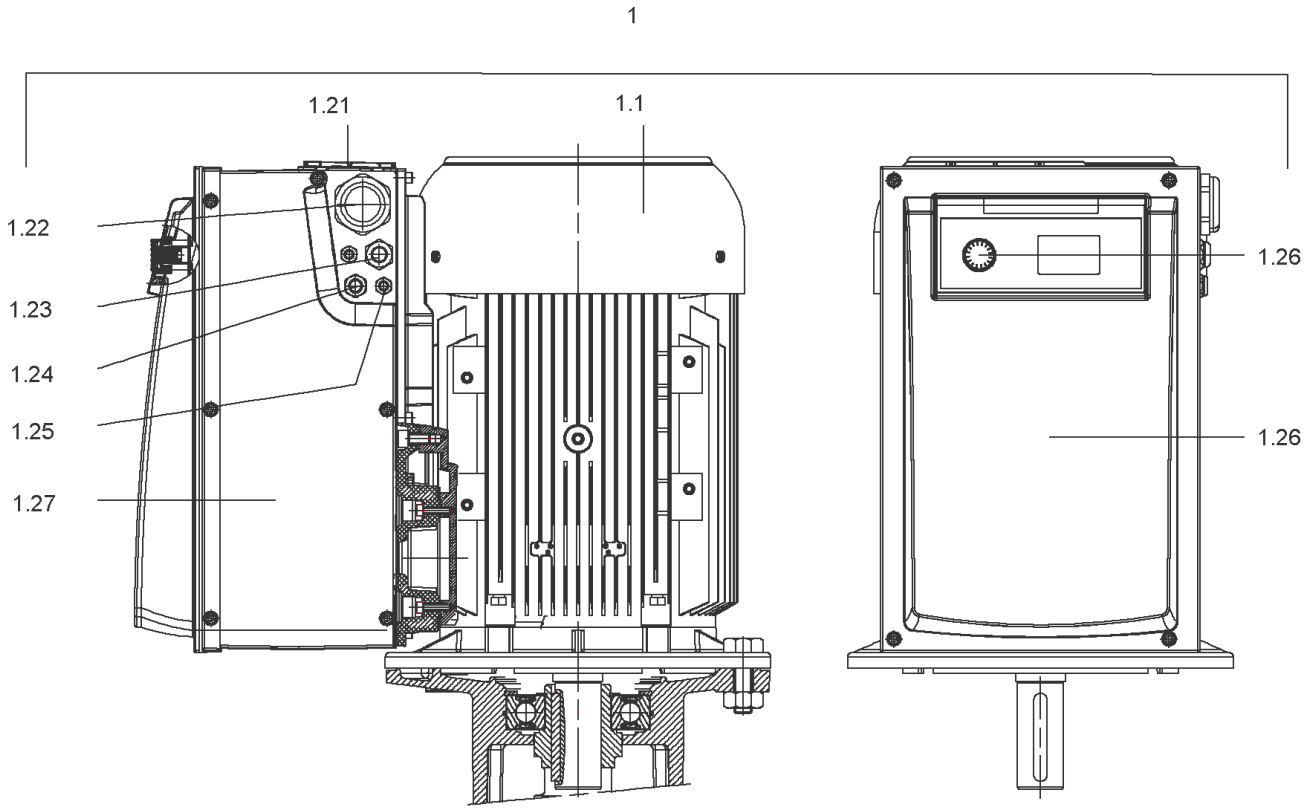
1
1.21
1.1
1.22
1.23
1.24
1.25
1.27
1.26
1.26

## DRIVE HELIX VE3605-IE4-WEG KIT (4218532)

| Item | Article no. | Description | Quantity |
|---|---|---|---|
| 1.1 | | M15-2T540P55V1-160F30-N42-ADAPT-IE4-WEG | 1 |
| | | SPARE PARTS MOTOR:ON REQUEST | 1 |
| 1.21 | 2132102 | FAN SMALL TL6/7 FF KIT | 1 |
| 1.25 | 2132097 | CABLE CONNECTION M12 TL6/7 FF VP. | 1 |
| 1.24 | 2132098 | CABLE CONNECTION M16 TL6/7 FF VP. | 1 |
| 1.23 | 2132099 | CABLE CONNECTION M20 TL6/7 FF VP. | 1 |
| 1.22 | 2132100 | CABLE CONNECTION SMALL M40 TL6/7 FF VP. | 1 |
| 1.27 | 2132104 | COVER SIDE TL6/7 FF CPL.VP. | 1 |
| 1.26 | 2132452 | MODULE COVER/BUTTON TL6/7 FF VP. | 1 |

## COUPLING D.20XD.38 FF300 KIT (4143966)

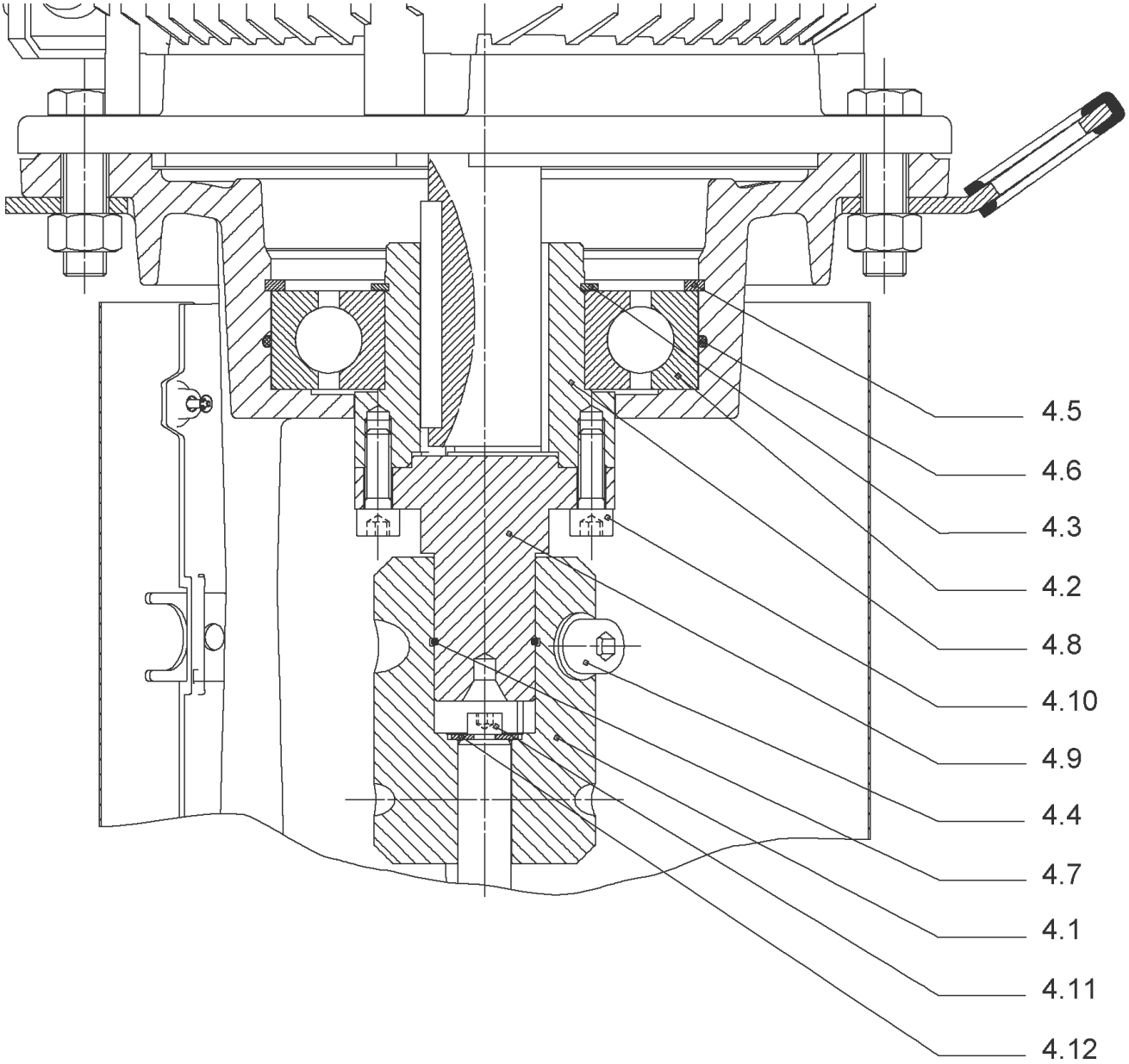

## COUPLING D.20XD.38 FF300 KIT (4143966)

| Item | Article no. | Description | Quantity |
|---|---|---|---|
| 4.1 | 4179590 | COUPLING 2 PARTS D.20XD.38XL115 VP. | 1 |
| 4.2 | 2123699 | BALL BEARING 6312/2Z-C4 (HT) VP. | 1 |
| 4.3 | 63428 | CIRCLIP-FOR-SHAFT-D60x2 | 1 |
| 4.4 | 2130991 | SCREW M12X30 ISO4762 8.8 ZN(4 PIECES) | 1 |
| 4.5 | 4032277 | CIRCLIP-HOLE-130x4 | 1 |
| 4.6 | 4006725 | O-RING ID.132,94x3,53 NBR70SR | 1 |
| 4.7 | 2130992 | RETAINING RING D.35xD.2,5 DIN7993 VP. | 1 |
| 4.8 | 4179591 | HUB D.42xD.60 VP. | 1 |
| 4.9 | 2130994 | SPACER D.38XD.55 VP. | 1 |
| 4.10 | 4094462 | SCREWS M10 ( 4 PIECES ) | 1 |
| 4.11 | 4233959 | SCREW M8x16 VP. | 1 |
| 4.12 | | SERRATED LOCK WASHER Ø8.2XØ25X35X2 | 1 |

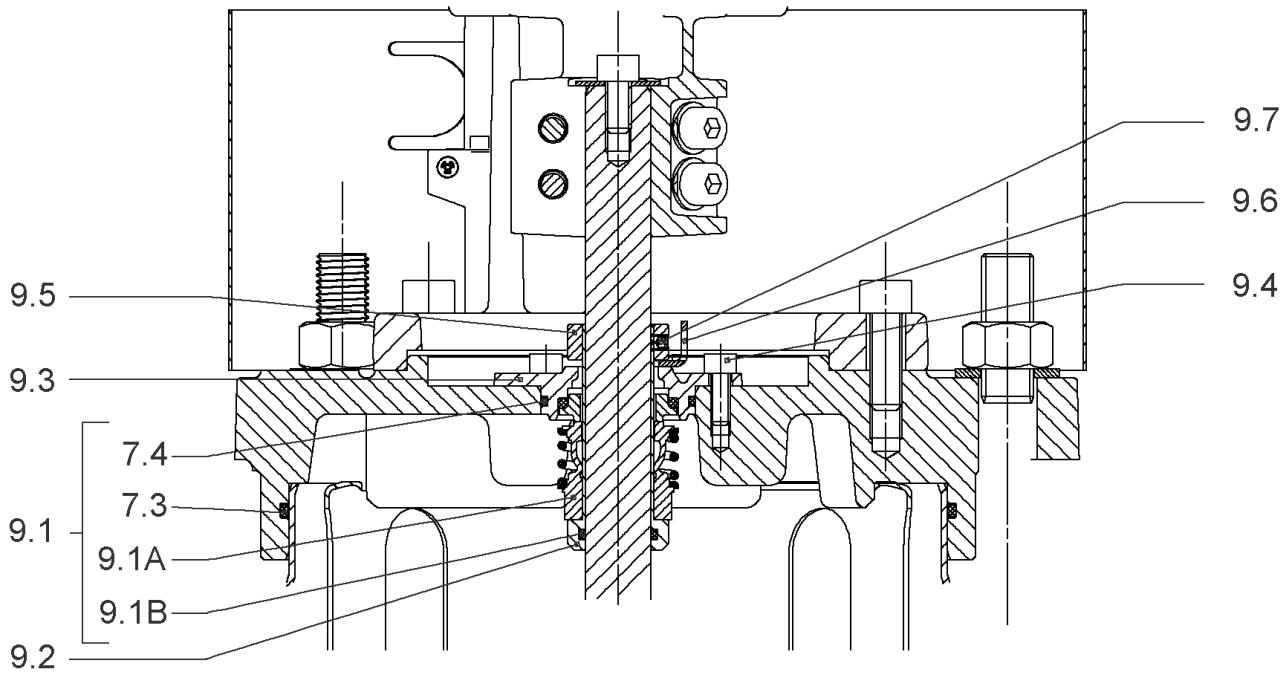
9.7
9.6
9.4
9.5
9.3
7.4
7.3
9.1
9.1A
9.1B
9.2

## CARTRIDGE HELIX22-36-52 O/E KIT (4143973)

| Item | Article no. | Description | Quantity |
|---|---|---|---|
| 9.1 | 4143974 | SEAL-KIT-HELIX22-36-52 O/E | 1 |
| 7.3 | 4179571 | > O-RING HOUSING PIPE HELIX22/36/52 VP. | 1 |
| 7.4 | 4179572 | > O-RING ID.42.52X2.62 EPDM VP. | 1 |
| 9.1A | 4179573 | > M.SEAL.HELIX22-36-52 O/E VP. | 1 |
| 9.1B | 4179574 | > O-RING ID.20x2.65 EPDM VP. | 1 |
| 9.2 | 4179566 | SHAFT SLEEVE D.20/20X60 1.4404 VP. | 1 |
| 9.3 | 4179567 | RING HOLDER Ø22 1.4301 VP. | 1 |
| 9.4 | 4176520 | SCREW CH M5x5 A4-70 ( 3PIECES ) | 1 |
| 9.5 | 4179568 | DRIVE RING D.31/22.1x11 MACH.VP. | 1 |
| 9.6 | 4179569 | TOOL M.S.CART.HELIX 8'' VP. | 1 |
| 9.7 | 4179570 | SCREW M6X16 ISO4762 8.8 GEOMET(4 PIECES) | 1 |

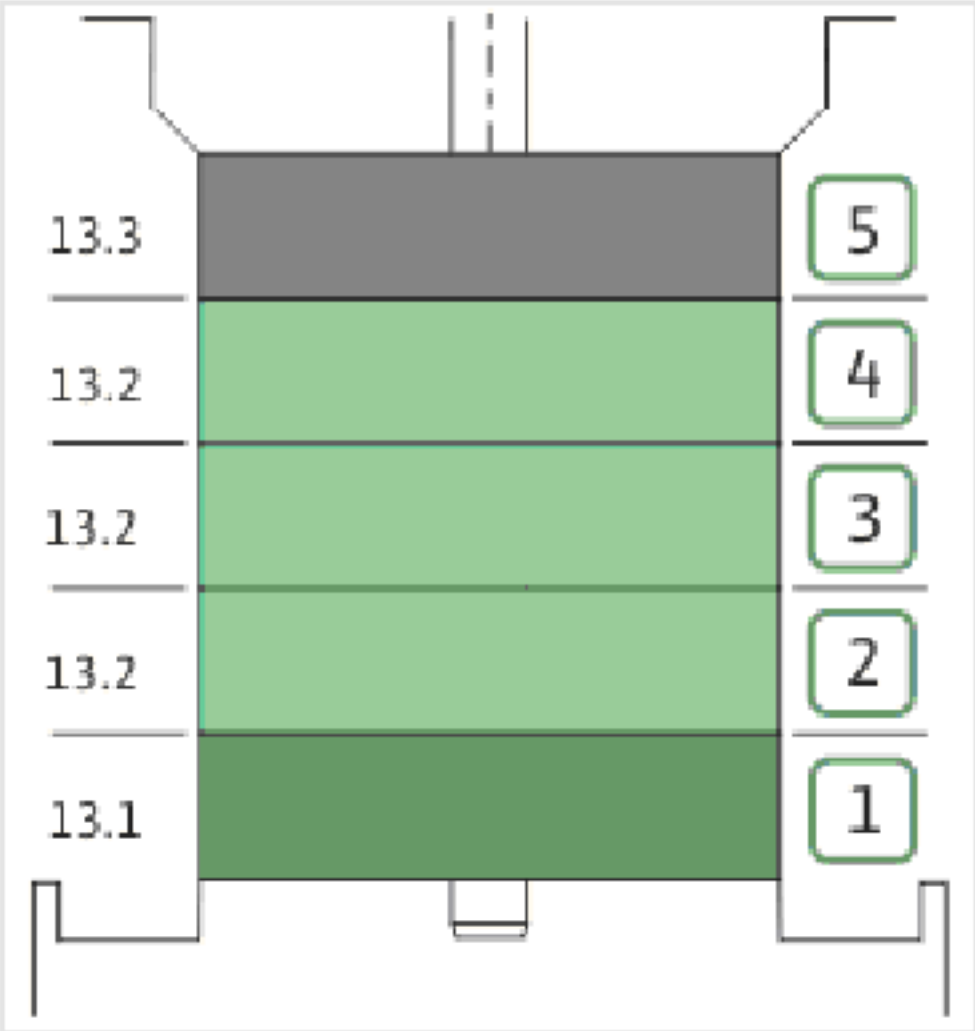
13.3
13.2
13.2
13.2
13.1
5
4
3
2
1

| Item | Article no. | Description | Quantity |
|---|---|---|---|
| 13.1 | 4161192 | INTERMEDIATE STAGE HELIX V36 1.4301 KIT | 1 |
| | | > SLEEVE-SPACER-D22XL16,66-316L | 1 |
| | | > MACH.BEARING-DIFFUSER+NR-M+36-304 | 1 |
| | | > SHAFT-SLEEVE-D26xD22x16-CW | 1 |
| | | > IMPELLER-H1-M+36-304 | 1 |
| 13.1A | 4161200 | > NECK RING 1.STAGE HELIX V36/52 KIT | 1 |
| | | >> NECK-RING-M+36/52 | 1 |
| | | >> HYDRAULIC SUPPORT CAP M+36/52 304 | 1 |
| | | >> SCREW TCL M3X8 A4 POZIDRIV | 1 |
| 13.2 | 4161193 | INTERMEDIATE STAGE HELIX V36 1.4301 KIT | 1 |
| | | > MACH.STD-DIFFUSER+NR-M+36-304 | 1 |
| | | > IMPELLER-H4-M+36-304 | 1 |
| 13.3 | 4161194 | UPPER STAGE HELIX 36 1.4301 KIT | 1 |
| | | > STOP COLLAR OF IMPELLER L20-Ø22-316L | 1 |
| | | > IMPELLER-H4-M+36-304 | 1 |
| | | > MACH.-RIGID-STD-DISCH.-CHAMBER-M+36-304 | 1 |

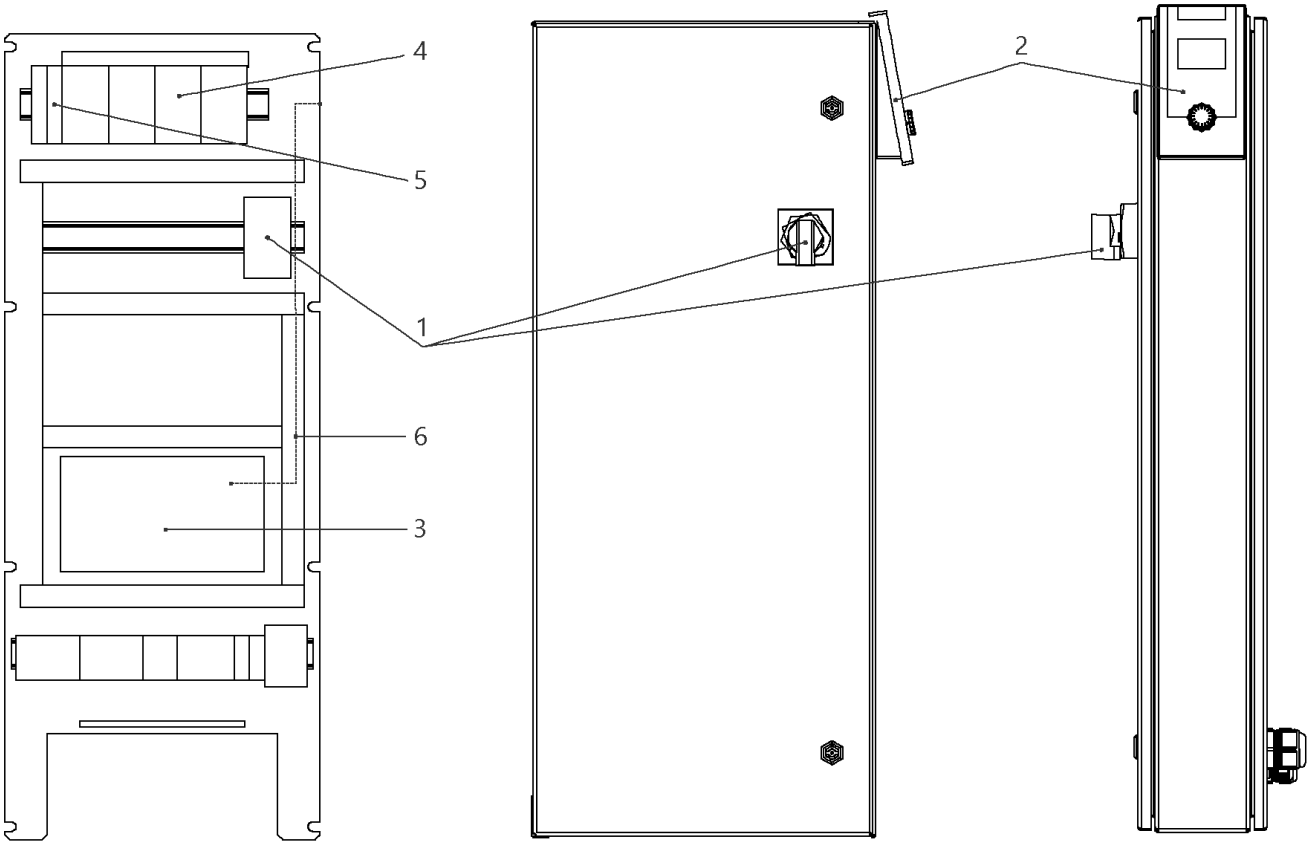
4
5
1
6
3
2

## W-CTRL-SCE-B-4x32A-T34-FM-ND4-AVC-PKG

| Item | Article no. | Description | Quantity |
|---|---|---|---|
| 1 | 2050183 | MAIN SWITCH OT160E3-2 VP. | 1 |
| 1 | 2090420 | HANDLE OHY 65J6/SHAFT OXP6x290 KIT | 1 |
| 2 | 4184784 | CONTROL PANEL HMI SC KIT | 1 |
| 2 | 4185259 | ASSEMBLY DISPLAY SC PKG VP. | 1 |
| Note: DISPLAY ALONE / PLATINE SEULE | | | |
| 3 | 4185257 | ASSEMBLY CPU SCe Booster VP. | 1 |
| 4 | 2051220 | AUTOM.CIRCUIT BREAKER S203 B40 FOR18,5kW | 1 |
| 5 | 2046288 | CIRCUIT BREAKER S201 B16 | 1 |
| 6 | 4204004 | PATCH CABLE RJ45 CAT6 1,5M GREY SC-PANEL | 1 |

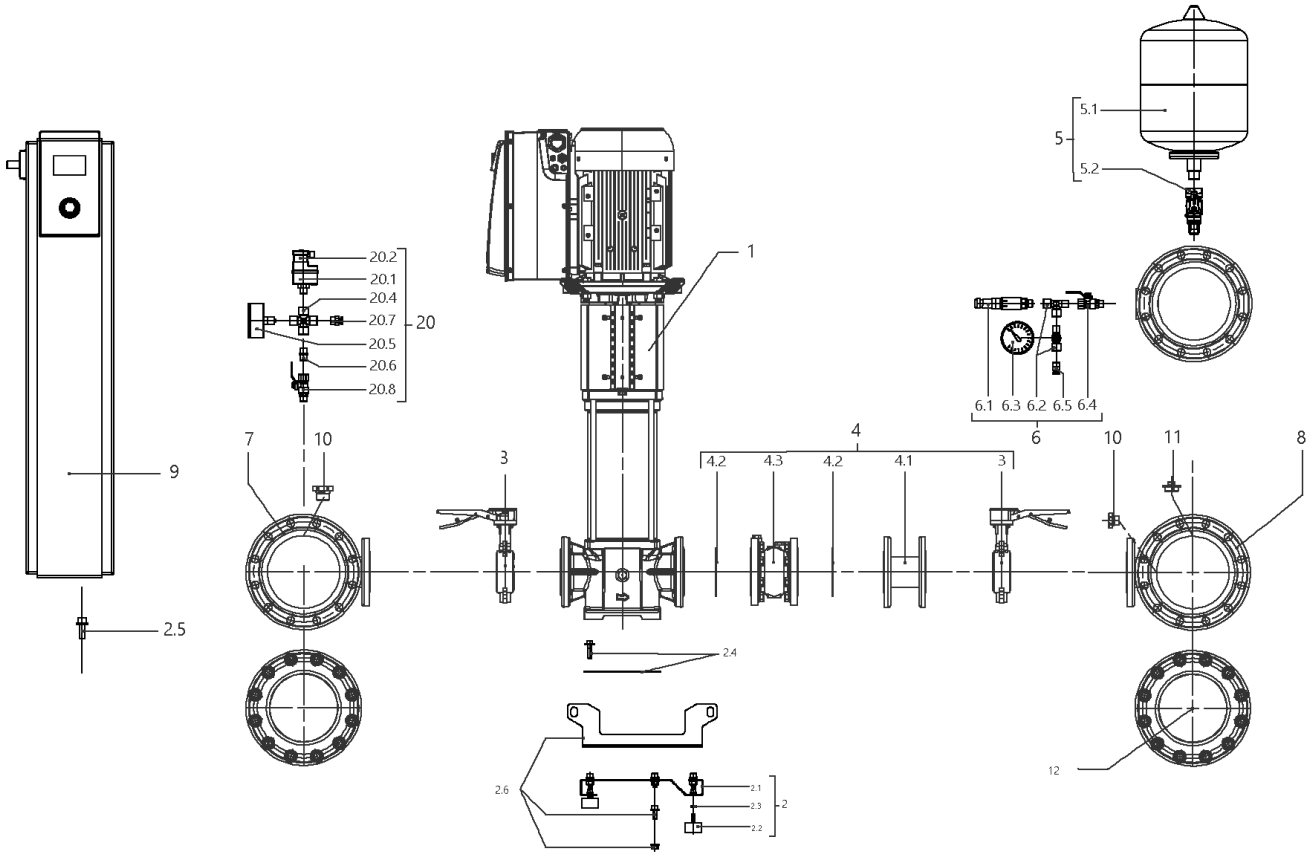
5.1
5
5.2
1
20.2
20.1
20.4
20.7
20
20.5
20.6
20.8
6.1 6.3 6.2 6.5 6.4
6
4
4.2 4.3 4.2 4.1
3
7
10
3
10
11
8
9
2.5
2.4
12
2.6
2.1
2.3
2
2.2

## SiBoost Smart 4HELIX VE5202 (2540933)

| Item | Article no. | Description | Quantity |
|---|---|---|---|
| 1 | | HELIX VE5202-4/16/E/S-FF240 | 1 |
| 2 | 4204917 | BASE PLATE DE4 2250x420 M10 KIT | 1 |
| 2.1 | | > BASE_FR_4x22/36/52V_E500_L400_BOX150-250 | 1 |
| 2.2 | 2027881 | > VIBRATION DAMPER M.10X20 D.70 | 1 |
| 2.3 | 2028281 | > NUT M10 DIN936 (ISO4035) 17H VZ | 1 |
| 2.4 | 4204891 | > HOLDER PUMP Siboost Smart V36/52 KIT | 1 |
| 2.5 | 4197084 | > HOLDER SWITCHBOX WILO Smart Control KIT | 1 |
| 2.6 | 4203979 | > LIFTING Siboost HELIX 22/36 KIT | 1 |
| 3 | | BUTTERFLY VALVE 316 DN80 BLACK PS16 | 1 |
| 4 | 4204922 | DELIVERY SIDE Siboost Helix 52 KIT | 1 |
| 3 | | > BUTTERFLY VALVE 316 DN80 BLACK PS16 | 1 |
| 4.1 | | > FLANGE ADAPTER DN80x125 PN16 AISI304 | 1 |
| 4.2 | 2042897 | > GASKET DN80 PN40 DIN2690 | 1 |
| 4.3 | 4205934 | > CHECK-VALVE-FLANGES-PLUG-DN80-PN16-VP. | 1 |
| 5 | 4203983 | DIAPHREM TANK 8L/PN16 DIN4807/T5 KIT | 1 |
| 5.1 | 2045914 | > DIAPHREM TANK 8L TYP-DD 16BAR | 1 |
| 5.2 | 4189350 | > FLOW FITTING G3/4 FOR DIAPHRAG VESSEL VP | 1 |
| 6 | 4197076 | PRESSURE SENSOR/ GAUGE 0-16BAR KIT | 1 |
| 6.1 | 2085909 | > PRESS.SENSOR 1/4" 0-16BAR 4-20MA VP. | 1 |
| 6.2 | 4197077 | > T-PIECE 1/4" VP. | 1 |
| 6.3 | 2028692 | > PRESSURE GAUGE NG63-PN16-G1/4 | 1 |
| 6.4 | 2028291 | > BALL TAP R1/4" PN42 GIACOMINI R254DL | 1 |
| 6.5 | 2028691 | > BLOWGUN 1/4" MS 30BAR VP. | 1 |
| 7 | 4205938 | PIPE DE4 DN200-4xDN80+2x1/4x2000 VP. | 1 |
| 8 | 4205939 | PIPE DE4 DN200-4xDN80+2x1/4+1x3/4x2000 | 1 |
| 9 | | W-CTRL-SCE-B-4x16A-T34-FM-ND2-AVC-PKG | 1 |
| 10 | 4197079 | PLUG G1/4"x10 AISI304 KIT | 1 |
| 11 | 2032654 | PLUG R3/4" MS VIEGA 1751 | 1 |
| 12 | 4205941 | BLIND-FLANGE DN200 PN16-A2 KIT | 1 |
| | 4205942 | > FLAT GASKET D.220/273x2 DN200 PN16 C4430 | 1 |
| | | > NUT M20 DIN934 A2 1.4301 | 1 |
| | | > screw M20x85 DIN931 A2-70 | 1 |
| | | > WASHER A21 DIN125 A2 1.4301 | 1 |
| | | > FULL FLANGE ST.DN200 PN16 EN1092-1/05 A2 | 1 |

| Item | Article no. | Description | Quantity |
|---|---|---|---|
| | | > FLANGE COVER DN200 DIN3443 FORM A | 1 |
| 20 | | ASSEMBLY WMS. DE-EB. +VP | 1 |
| 20.1 | 2028652 | > PRESSURE SWITCH PS3-ASR 1/(1,3) VP. | 1 |
| 20.2 | 2130983 | > PLUG PS3-415 WITH KABEL 1,5M 2NO VP. | 1 |
| 20.4 | 2028290 | > CROSSPIECE R1/4" MS-NICKEL | 1 |
| 20.5 | 2028687 | > PRESSURE GAUGE NG63 R1/4" HI.0-6BAR | 1 |
| 20.6 | 2054268 | > DUAL NIPPLE G1/4" x G1/4" MS VP. | 1 |
| 20.7 | 2028691 | > BLOWGUN 1/4" MS 30BAR VP. | 1 |
| 20.8 | 2028291 | > BALL TAP R1/4" PN42 GIACOMINI R254DL | 1 |

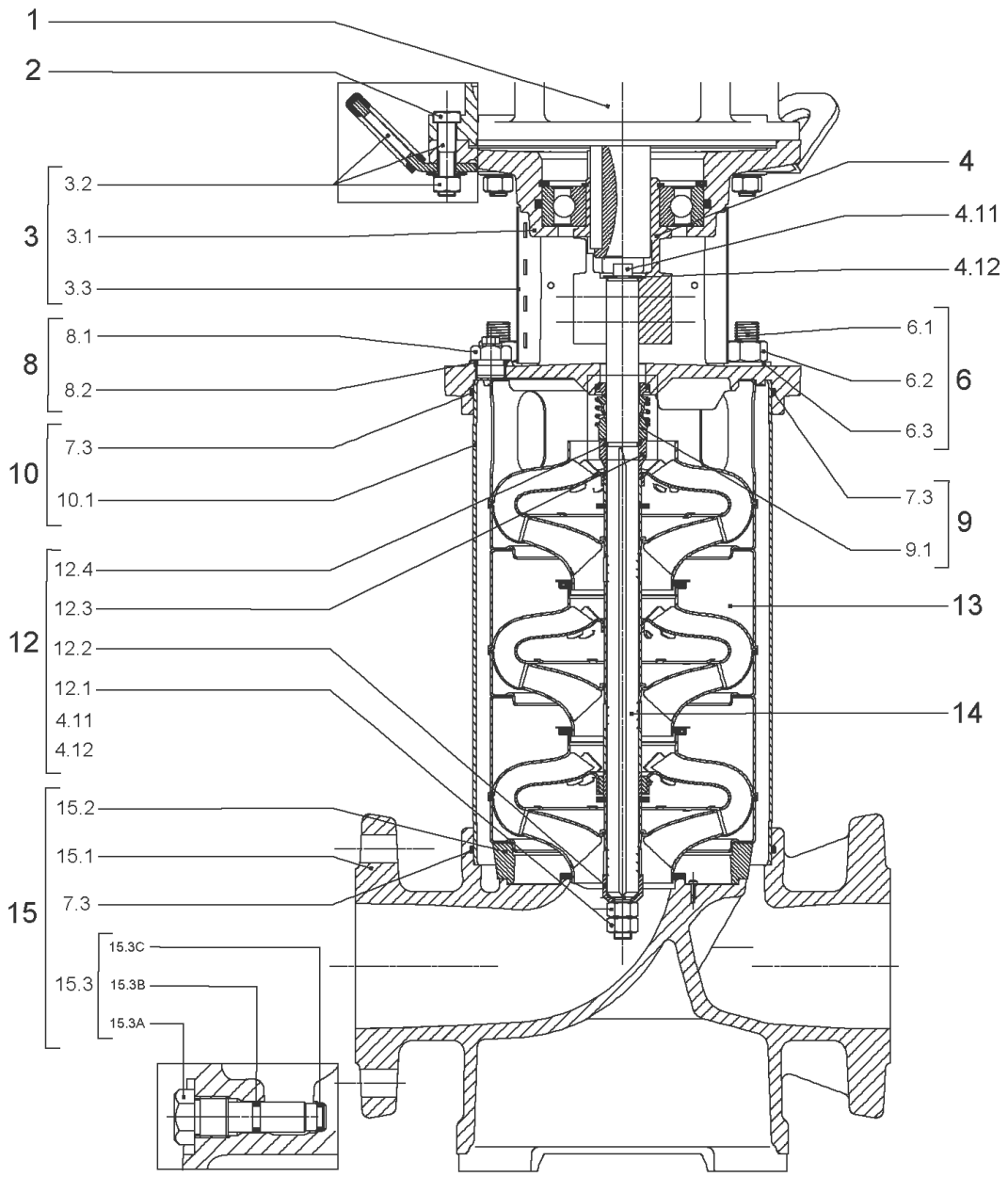
1
2
3
3.2
3.1
3.3
8
8.1
8.2
10
7.3
10.1
12
12.4
12.3
12.2
12.1
4.11
4.12
15
15.2
15.1
7.3
15.3
15.3C
15.3B
15.3A
4
4.11
4.12
6
6.1
6.2
6.3
9
7.3
9.1
13
14

| Item | Article no. | Description | Quantity |
|---|---|---|---|
| 1 | | DRIVE HELIX-VE5202-FF240-IE2-ATB KIT | 1 |
| Note: MOTOR BRAND ATB | | | |
| 1 | | DRIVE HELIX-VE5202-FF240-IE4-WE KIT | 1 |
| Note: MOTOR BRAND WILO ELEC | | | |
| | | SPARE PARTS MOTOR:ON REQUEST | 1 |
| 2 | 4174093 | SCREW M12X50 (4 PIECES) | 1 |
| 3 | 4186358 | LANTERN HELIX OPTI 8" FF240 KIT | 1 |
| 3.1 | | > M+8_LANTERN_ONE-PIECE_FF240_CATA_DWA | 1 |
| 3.2 | 4186346 | > EYELET CPL.FF240 HELIX (4 PIECES) | 1 |
| 3.3 | 4184853 | > COUPLING PROTECTOR FT HELIX 8'' KIT | 1 |
| 4 | 4186347 | COUPLING D.22XD.38 FF240T130 HELIX KIT | 1 |
| 6 | 4180018 | STUD BOLT M16X267 KIT | 1 |
| 6.1 | | > TIE BOLT M16-267x24x44-1.4057 | 1 |
| 6.2 | 4179562 | > NUT M16 8.8 ISO4032 (4 PIECES) | 1 |
| 6.3 | 4097852 | > WASHER-CS-16.4-32-2.8-NFE25-511-A2 | 1 |
| 8 | 4186377 | FILING/PURGING PLUG 304 HELIX KIT | 1 |
| 8.1 | | > FILLING/VENTING-PLUG-MVI8/10"-304 | 1 |
| 8.2 | 4032291 | > O-RING 17x3 EPDM KTW/WRC | 1 |
| 9 | 4192148 | SEAL-KIT-HELIX22-36-52 FIRST O/E | 1 |
| 7.3 | 4179571 | > O-RING HOUSING PIPE HELIX22/36/52 VP. | 1 |
| 9.1 | 4179573 | > M.SEAL.HELIX22-36-52 O/E VP. | 1 |
| 10 | 4179582 | HOUSING PIPE D.204X230 1.4307 KIT | 1 |
| 7.3 | 4179571 | > O-RING HOUSING PIPE HELIX22/36/52 VP. | 1 |
| 10.1 | | > HOUSING-PIPE Ø204-M+5202-304 | 1 |
| 12 | 4186386 | SHAFT EQUIPMENT HELIX 52 FIRST KIT | 1 |
| 13 | | HYDRAULIC HELIX V 5202 | 1 |
| 14 | 4186344 | SHAFT D.22X351 1.4057 VP. | 1 |
| 15 | 4186388 | EQUIPED HOUSING HELIX FIRST DN80 DWA KIT | 1 |
| 15.1 | | > PUMP CASING MONO.GJL M+8" DN80 DWA | 1 |
| 15.2 | | > HYD.SUP.M+8" ONE PIECE HOUSING N80 DWA | 1 |
| 15.3 | 4106048 | > DRAIN/PRIMING PLUG EPDM HELIX FIRST KIT | 1 |
| 15.3A | | >> DRAIN AND PRIMING PLUG-VMI10"-304 | 1 |
| 15.3B | 4032293 | >> O-RING-10x3-EPDM-KTW/WRC | 1 |
| 15.3C | 4233957 | >> O-RING ID.9 EPDM VP. | 1 |

| Item | Article no. | Description | Quantity |
|---|---|---|---|
| 7.3 | 4179571 | > O-RING HOUSING PIPE HELIX22/36/52 VP. | 1 |
| 13.1A | 4161200 | > NECK RING 1.STAGE HELIX V36/52 KIT | 1 |
| | | >> NECK-RING-M+36/52 | 1 |
| | | >> HYDRAULIC SUPPORT CAP M+36/52 304 | 1 |
| | | >> SCREW TCL M3X8 A4 POZIDRIV | 1 |

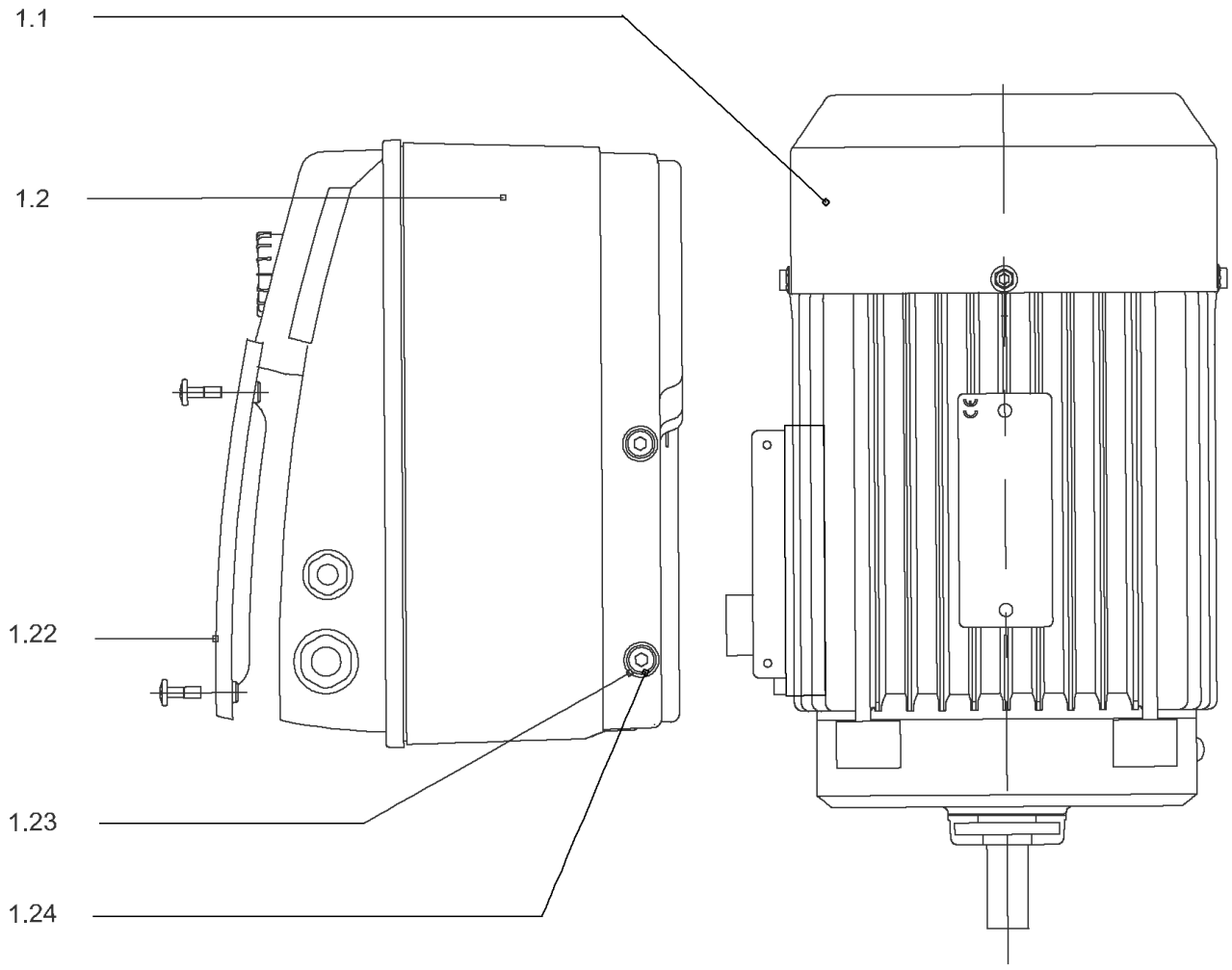
1.1
1.2
1.22
1.23
1.24

## DRIVE HELIX-VE5202-FF240-IE2-ATB KIT

| Item | Article no. | Description | Quantity |
|---|---|---|---|
| | | M7,5-2T540P55V1-132F24-SU-N38-AD-IE2-ATB | 1 |
| Note: no longer available/nicht mehrlieferbar/n'est plus disponible | | | |
| | | SPARE PARTS MOTOR:ON REQUEST | 1 |
| | 4195917 | MODULE HELIX-VE5202-IE2-ATB KIT | 1 |
| 1.22 | 2111344 | > MODULE COVER/GASKET TL5 KIT | 1 |
| 1.23 | 4215716 | > SCREW M5X16 DIN912 8.8 A2A (4pieces) VP. | 1 |
| 1.24 | 2057978 | > RONDELLE A5,3 DIN6797 FST ZN (4 PIECES) | 1 |

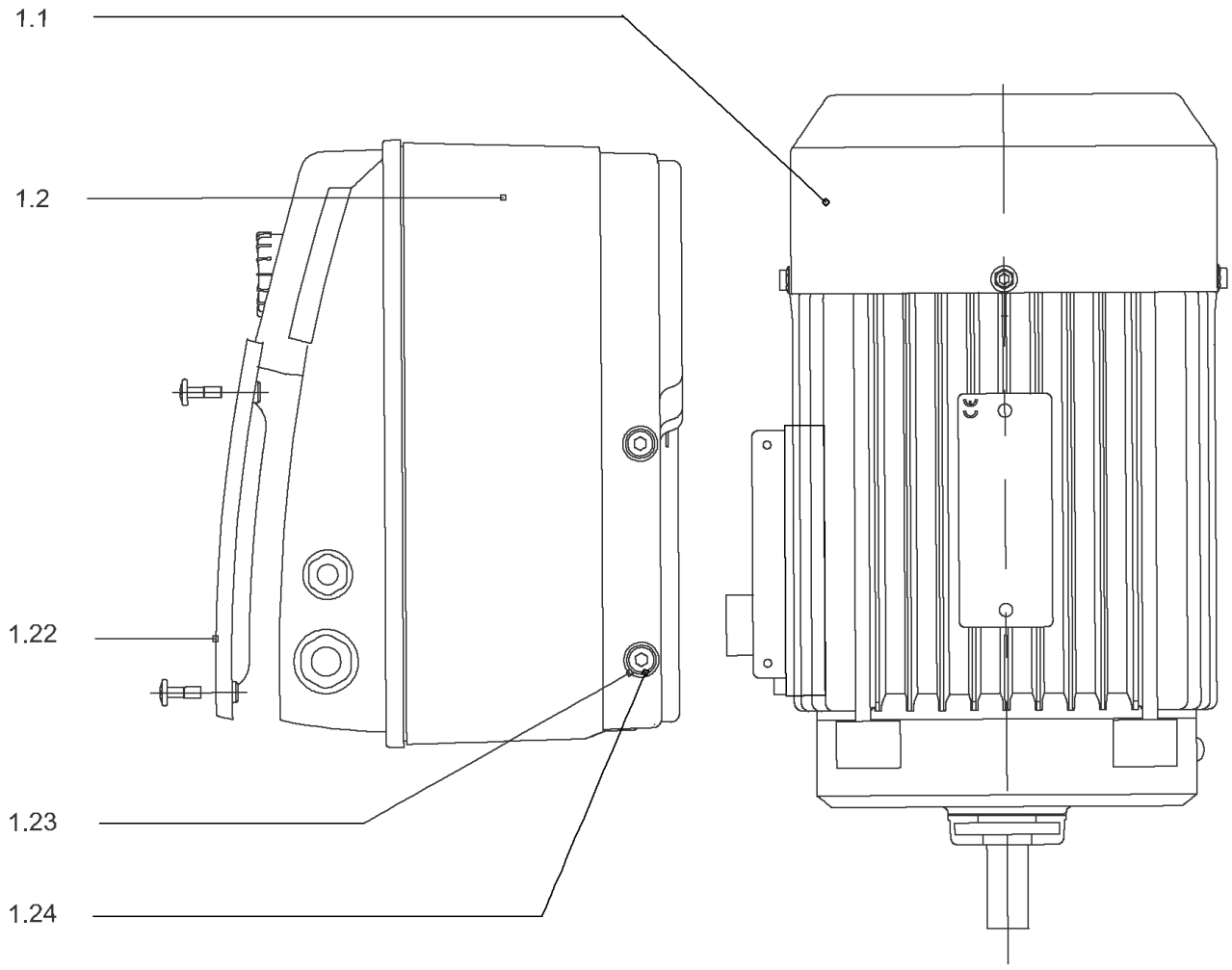
1.1
1.2
1.22
1.23
1.24

## DRIVE HELIX-VE5202-FF240-IE4-WE KIT

| Item | Article no. | Description | Quantity |
|---|---|---|---|
| 1.1 | 4207936 | MO.7.5/2/132FF240 3~400V 50Hz IE4 WE VP. | 1 |
| | | SPARE PARTS MOTOR:ON REQUEST | 1 |
| 1.2 | 4212641 | MODULE HELIX-VE5202-IE4-WE KIT | 1 |
| 1.22 | 2111344 | > MODULE COVER/GASKET TL5 KIT | 1 |
| 1.23 | 4215716 | > SCREW M5X16 DIN912 8.8 A2A (4pieces) VP. | 1 |
| 1.24 | 2057978 | > RONDELLE A5,3 DIN6797 FST ZN (4 PIECES) | 1 |

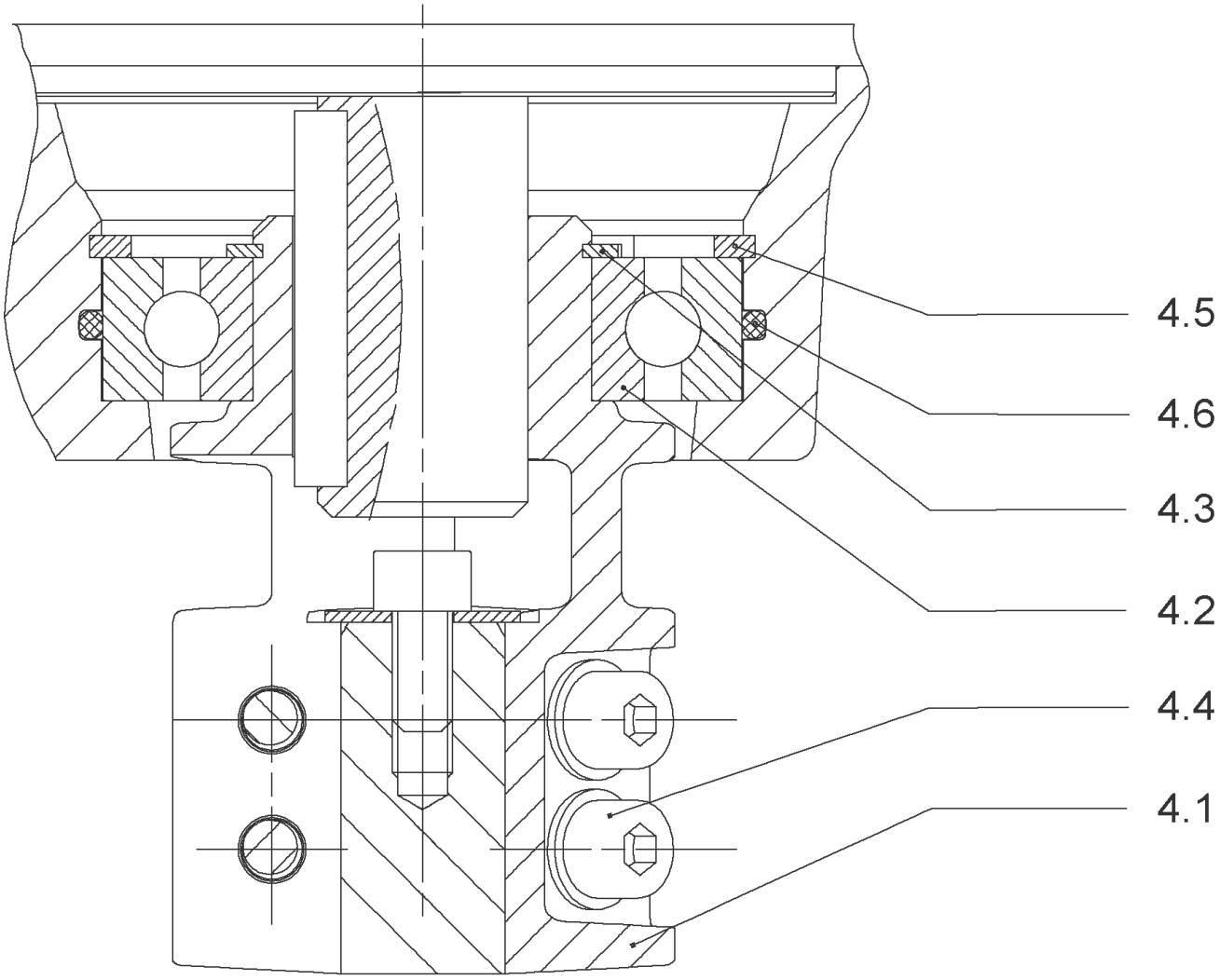
4.5
4.6
4.3
4.2
4.4
4.1

## COUPLING D.22XD.38 FF240T130 HELIX KIT (4186347)

| Item | Article no. | Description | Quantity |
|---|---|---|---|
| 4.1 | | COUPLING-VMI-D22xD38-FF265-MACHINED | 1 |
| 4.2 | 2131017 | BALL BEARING 6310/ZZ-C4(HT)VP. | 1 |
| 4.3 | 4234253 | CIRCLIP-FOR-SHAFT-D50x2 VP. | 1 |
| 4.4 | 4157726 | SCREW KIT M8X30 (4 PIECES) | 1 |
| 4.5 | 4234255 | CIRCLIPS 110X4 VP. | 1 |
| 4.6 | 4233944 | O-RING ID.110 VP. | 1 |
| | | NOMEL CONTACT WASHER 8x16x1,4 STEEL ZC | 1 |

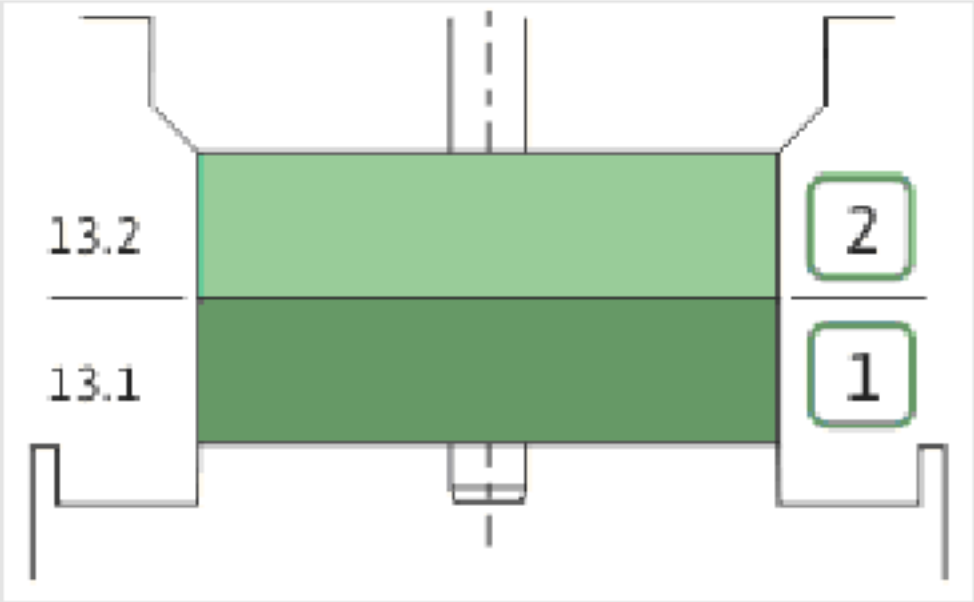
13.2
13.1
2
1

| Item | Article no. | Description | Quantity |
|---|---|---|---|
| 13.1 | 4164727 | INTERMEDIAIRE STAGE HELIX 52 1.4301 KIT | 1 |
| | | > SLEEVE-SPACER-D22XL30,42-316L | 1 |
| | | > MACH.BEARING-DIFFUSER+NR-M+52-304 | 1 |
| | | > SHAFT-SLEEVE-D26xD22x16-CW | 1 |
| | | > SPACER WASHER D22,3XD36 L3-316L | 1 |
| | | > IMPELLER-H2-M+52-304 | 1 |
| 13.1A | 4161200 | > NECK RING 1.STAGE HELIX V36/52 KIT | 1 |
| | | >> NECK-RING-M+36/52 | 1 |
| | | >> HYDRAULIC SUPPORT CAP M+36/52 304 | 1 |
| | | >> SCREW TCL M3X8 A4 POZIDRIV | 1 |
| 13.2 | 4164729 | UPPER-STAGE HELIX 52 1.4301 KIT | 1 |
| | | > STOP COLLAR OF IMPELLER L27,6-Ø22-316L | 1 |
| | | > SLEEVE-SPACER-D22XL16,66-316L | 1 |
| | | > SPACER WASHER D22,3XD36 L3-316L | 1 |
| | | > IMPELLER-H2-M+52-304 | 1 |
| | | > MACH.STD-DISCHARGE-CHAMBER-M+52-304 | 1 |

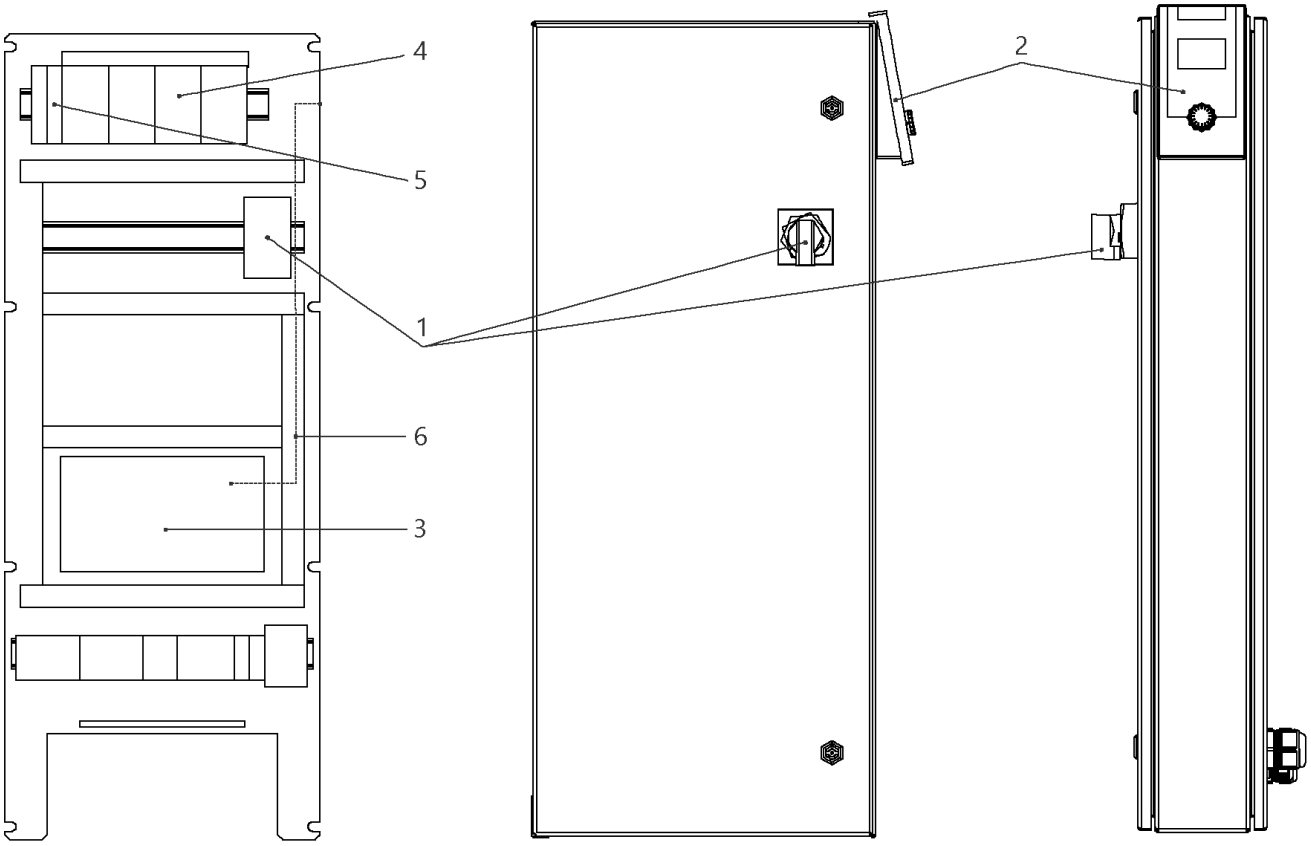
4
5
1
6
3
2

## W-CTRL-SCE-B-4x16A-T34-FM-ND2-AVC-PKG

| Item | Article no. | Description | Quantity |
|---|---|---|---|
| 1 | 2104477 | MAIN SWITCH OT80F3 L105 KIT | 1 |
| 2 | 4184784 | CONTROL PANEL HMI SC KIT | 1 |
| 2 | 4185259 | ASSEMBLY DISPLAY SC PKG VP. | 1 |
| Note: DISPLAY ALONE / PLATINE SEULE | | | |
| 3 | 4185257 | ASSEMBLY CPU SCe Booster VP. | 1 |
| 4 | 4197832 | AUTOMATIC CIRCUIT BREAKER S203 B20 VP. | 1 |
| 5 | 2046288 | CIRCUIT BREAKER S201 B16 | 1 |
| 6 | 4194956 | PATCH CABLE RJ45 CAT6 1,0M BLUE SC-PANEL | 1 |

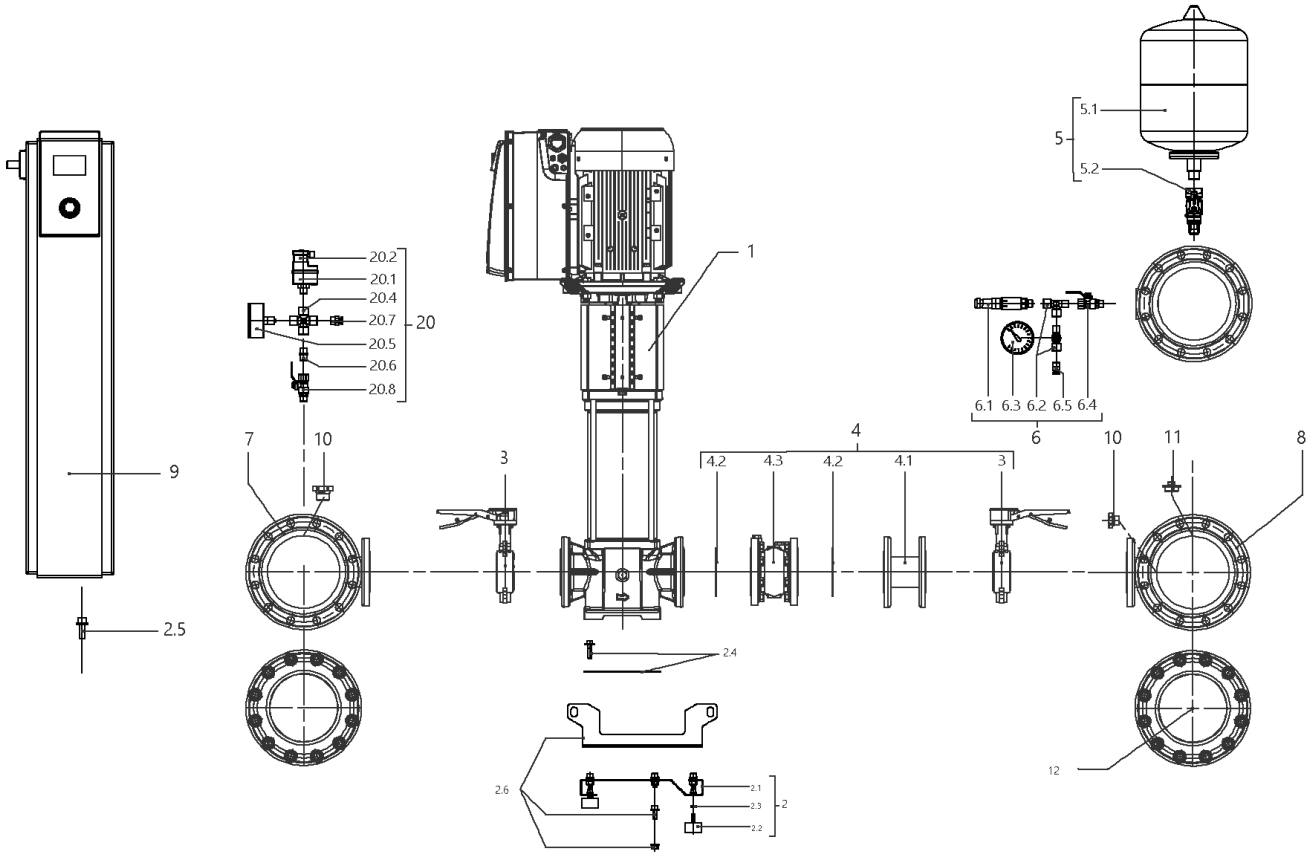
5.1
5
5.2
1
20.2
20.1
20.4
20.7
20
20.5
20.6
20.8
6.1 6.3 6.2 6.5 6.4
6
4
4.2 4.3 4.2 4.1
3
7
10
3
10
11
8
9
2.5
2.4
12
2.6
2.1
2.3
2
2.2

## SiBoost Smart 4HELIX VE5203 (2540934)

| Item | Article no. | Description | Quantity |
|---|---|---|---|
| 1 | | HELIX VE5203-4/16/E/KS/2G | 1 |
| 2 | 4204917 | BASE PLATE DE4 2250x420 M10 KIT | 1 |
| 2.1 | | > BASE_FR_4x22/36/52V_E500_L400_BOX150-250 | 1 |
| 2.2 | 2027881 | > VIBRATION DAMPER M.10X20 D.70 | 1 |
| 2.3 | 2028281 | > NUT M10 DIN936 (ISO4035) 17H VZ | 1 |
| 2.4 | 4204891 | > HOLDER PUMP Siboost Smart V36/52 KIT | 1 |
| 2.5 | 4197084 | > HOLDER SWITCHBOX WILO Smart Control KIT | 1 |
| 2.6 | 4203979 | > LIFTING Siboost HELIX 22/36 KIT | 1 |
| 3 | | BUTTERFLY VALVE 316 DN80 BLACK PS16 | 1 |
| 4 | 4204922 | DELIVERY SIDE Siboost Helix 52 KIT | 1 |
| 3 | | > BUTTERFLY VALVE 316 DN80 BLACK PS16 | 1 |
| 4.1 | | > FLANGE ADAPTER DN80x125 PN16 AISI304 | 1 |
| 4.2 | 2042897 | > GASKET DN80 PN40 DIN2690 | 1 |
| 4.3 | 4205934 | > CHECK-VALVE-FLANGES-PLUG-DN80-PN16-VP. | 1 |
| 5 | 4203983 | DIAPHREM TANK 8L/PN16 DIN4807/T5 KIT | 1 |
| 5.1 | 2045914 | > DIAPHREM TANK 8L TYP-DD 16BAR | 1 |
| 5.2 | 4189350 | > FLOW FITTING G3/4 FOR DIAPHRAG VESSEL VP | 1 |
| 6 | 4197076 | PRESSURE SENSOR/ GAUGE 0-16BAR KIT | 1 |
| 6.1 | 2085909 | > PRESS.SENSOR 1/4" 0-16BAR 4-20MA VP. | 1 |
| 6.2 | 4197077 | > T-PIECE 1/4" VP. | 1 |
| 6.3 | 2028692 | > PRESSURE GAUGE NG63-PN16-G1/4 | 1 |
| 6.4 | 2028291 | > BALL TAP R1/4" PN42 GIACOMINI R254DL | 1 |
| 6.5 | 2028691 | > BLOWGUN 1/4" MS 30BAR VP. | 1 |
| 7 | 4205938 | PIPE DE4 DN200-4xDN80+2x1/4x2000 VP. | 1 |
| 8 | 4205939 | PIPE DE4 DN200-4xDN80+2x1/4+1x3/4x2000 | 1 |
| 9 | | W-CTRL-SCE-B-4x24A-T34-FM-ND4-AVC-PKG | 1 |
| 10 | 4197079 | PLUG G1/4"x10 AISI304 KIT | 1 |
| 11 | 2032654 | PLUG R3/4" MS VIEGA 1751 | 1 |
| 12 | 4205941 | BLIND-FLANGE DN200 PN16-A2 KIT | 1 |
| | 4205942 | > FLAT GASKET D.220/273x2 DN200 PN16 C4430 | 1 |
| | | > NUT M20 DIN934 A2 1.4301 | 1 |
| | | > screw M20x85 DIN931 A2-70 | 1 |
| | | > WASHER A21 DIN125 A2 1.4301 | 1 |
| | | > FULL FLANGE ST.DN200 PN16 EN1092-1/05 A2 | 1 |

| Item | Article no. | Description | Quantity |
|---|---|---|---|
| | | > FLANGE COVER DN200 DIN3443 FORM A | 1 |
| 20 | | ASSEMBLY WMS. DE-EB. +VP | 1 |
| 20.1 | 2028652 | > PRESSURE SWITCH PS3-ASR 1/(1,3) VP. | 1 |
| 20.2 | 2130983 | > PLUG PS3-415 WITH KABEL 1,5M 2NO VP. | 1 |
| 20.4 | 2028290 | > CROSSPIECE R1/4" MS-NICKEL | 1 |
| 20.5 | 2028687 | > PRESSURE GAUGE NG63 R1/4" HI.0-6BAR | 1 |
| 20.6 | 2054268 | > DUAL NIPPLE G1/4" x G1/4" MS VP. | 1 |
| 20.7 | 2028691 | > BLOWGUN 1/4" MS 30BAR VP. | 1 |
| 20.8 | 2028291 | > BALL TAP R1/4" PN42 GIACOMINI R254DL | 1 |

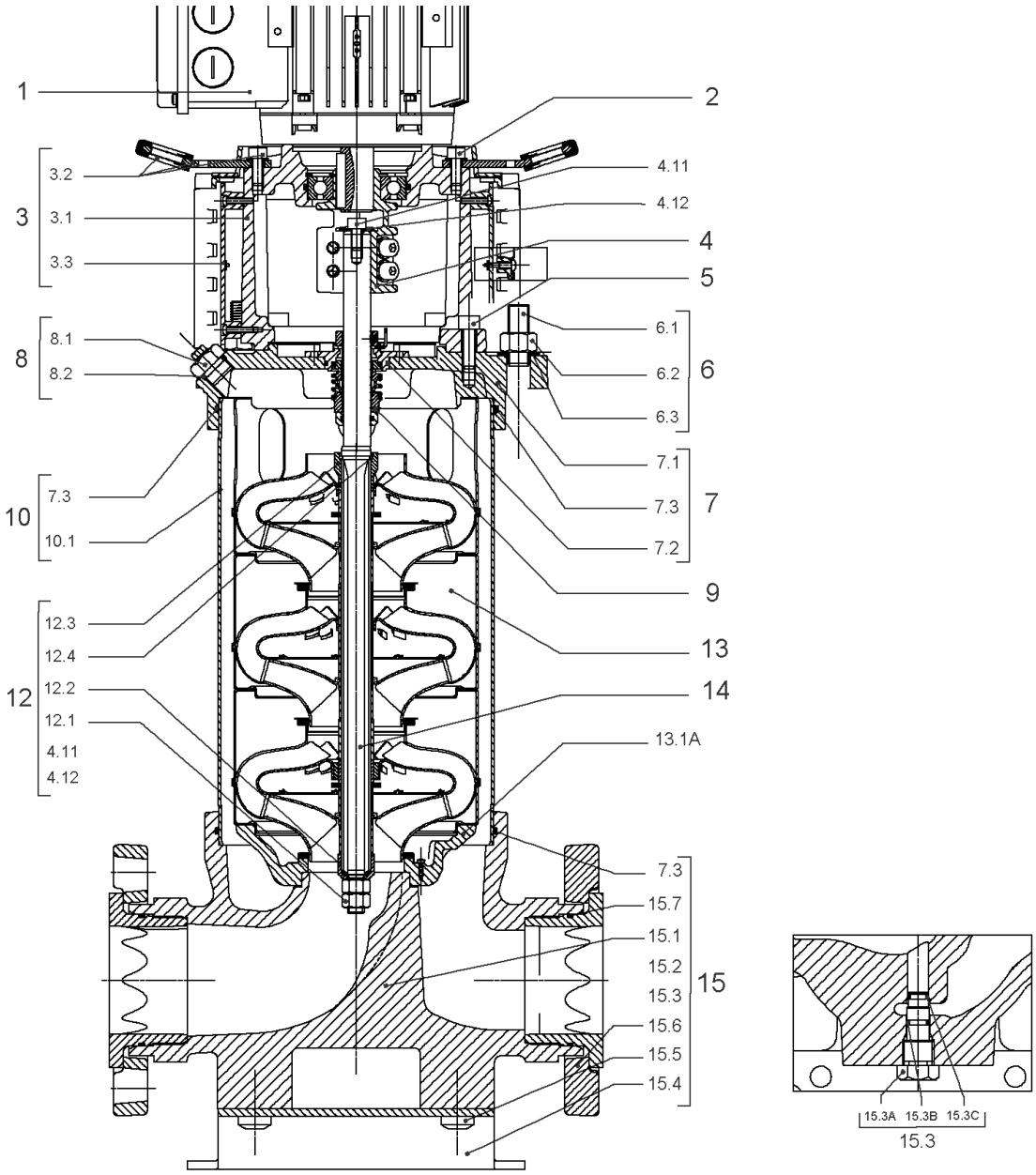
1
2
3
3.2
3.1
3.3
4.11
4.12
4
5
8
8.1
8.2
6.1
6.2
6.3
6
7.1
7.3
7.2
7
10
7.3
10.1
9
12
12.3
12.4
12.2
12.1
4.11
4.12
13
14
13.1A
7.3
15.7
15.1
15.2
15.3
15.6
15.5
15.4
15
15.3A
15.3B
15.3C
15.3

| Item | Article no. | Description | Quantity |
|---|---|---|---|
| 1 | | DRIVE HELIX VE5203-IE2-ARC KIT | 1 |
| Note: no longer available/nicht mehrlieferbar/n'est plus disponible | | | |
| 1 | 4218538 | DRIVE HELIX VE5203-IE4-WEG KIT | 1 |
| Note: MOTOR BRAND WEG | | | |
| 2 | 4179586 | SCREW M16X60 (4 PIECES) | 1 |
| 3 | 4157721 | LANTERN HELIX 22/36 FF300 BB6312 KIT | 1 |
| 3.1 | | > LANTERN FF300 M+ GJL MACHINED+CATA 6312 | 1 |
| 3.2 | 4179589 | > EYELET CPL.FF300 HELIX(4 PIECES) | 1 |
| 3.3 | 4143969 | > COUPLING PROTECT HELIX FF KIT | 1 |
| 4 | 4143966 | COUPLING D.20XD.38 FF300 KIT | 1 |
| 5 | 4157725 | SCREW M10X40 (4 PIECES) | 1 |
| 6 | 4179592 | STUD BOLT M16X405 KIT | 1 |
| 6.1 | | > TIE BOLT M16-405x24x44-1.4057 | 1 |
| 6.2 | 4179562 | > NUT M16 8.8 ISO4032 (4 PIECES) | 1 |
| 6.3 | 4097852 | > WASHER-CS-16.4-32-2.8-NFE25-511-A2 | 1 |
| 7 | 4179565 | END SHIELD HELIX 8'' EPDM KIT | 1 |
| 7.1 | | > END SHIELD M+ GJL MACHINED+CATA | 1 |
| 7.2 | 4179564 | > O-RING D.42.52x2.62 EPDM VP. | 1 |
| 7.3 | 4179571 | > O-RING HOUSING PIPE HELIX22/36/52 VP. | 1 |
| 8 | 4186377 | FILING/PURGING PLUG 304 HELIX KIT | 1 |
| 8.1 | | > FILLING/VENTING-PLUG-MVI8/10"-304 | 1 |
| 8.2 | 4032291 | > O-RING 17x3 EPDM KTW/WRC | 1 |
| 9 | 4143973 | CARTRIDGE HELIX22-36-52 O/E KIT | 1 |
| 10 | 4179593 | HOUSING PIPE D.204X330 1.4307 KIT | 1 |
| 7.3 | 4179571 | > O-RING HOUSING PIPE HELIX22/36/52 VP. | 1 |
| 10.1 | | > HOUSING-PIPE Ø204-M+3604/5203-304 | 1 |
| 11 | 4179583 | CENTRALIZER HELIX 8'' 52 VP. | 1 |
| 12 | 4164724 | SHAFT EQUIPMENT HELIX V52 KIT | 1 |
| 13 | | HYDRAULIC HELIX V 5203 | 1 |
| 14 | 4179599 | SHAFTS D.22X504 1.4057 VP. | 1 |
| 15 | 4186388 | EQUIPED HOUSING HELIX FIRST DN80 DWA KIT | 1 |
| 15.1 | | > PUMP CASING MONO.GJL M+8" DN80 DWA | 1 |
| 15.2 | | > HYD.SUP.M+8" ONE PIECE HOUSING N80 DWA | 1 |
| 15.3 | 4106048 | > DRAIN/PRIMING PLUG EPDM HELIX FIRST KIT | 1 |

| Item | Article no. | Description | Quantity |
|---|---|---|---|
| 15.3A | | >> DRAIN AND PRIMING PLUG-VMI10"-304 | 1 |
| 15.3B | 4032293 | >> O-RING-10x3-EPDM-KTW/WRC | 1 |
| 15.3C | 4233957 | >> O-RING ID.9 EPDM VP. | 1 |
| 7.3 | 4179571 | > O-RING HOUSING PIPE HELIX22/36/52 VP. | 1 |
| 13.1A | 4161200 | > NECK RING 1.STAGE HELIX V36/52 KIT | 1 |
| | | >> NECK-RING-M+36/52 | 1 |
| | | >> HYDRAULIC SUPPORT CAP M+36/52 304 | 1 |
| | | >> SCREW TCL M3X8 A4 POZIDRIV | 1 |

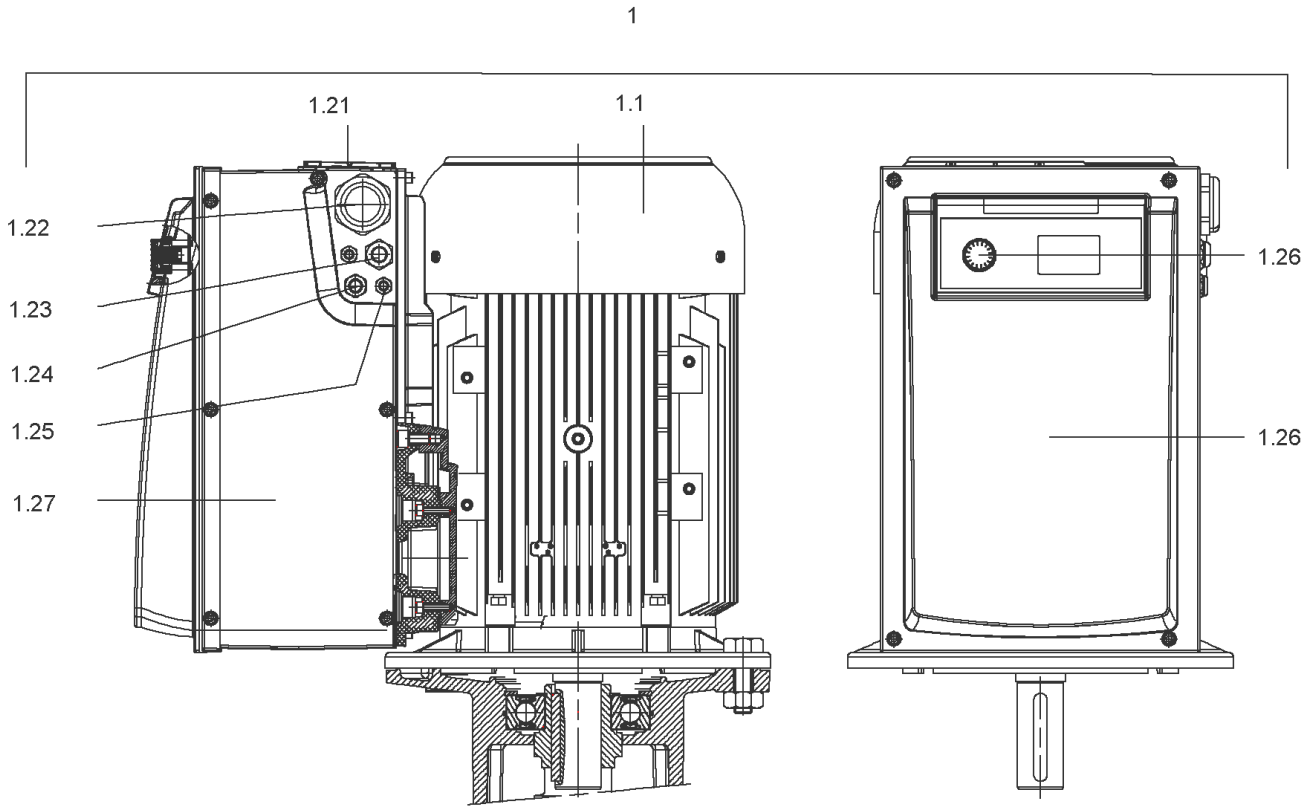
1
1.21
1.1
1.22
1.23
1.24
1.25
1.27
1.26
1.26

## DRIVE HELIX VE5203-IE2-ARC KIT

| Item | Article no. | Description | Quantity |
|---|---|---|---|
| 1.1 | | M11-2T540P55V1-160F300-N42-IE2 | 1 |
| | | SPARE PARTS MOTOR:ON REQUEST | 1 |
| 1.21 | 2132102 | FAN SMALL TL6/7 FF KIT | 1 |
| 1.25 | 2132097 | CABLE CONNECTION M12 TL6/7 FF VP. | 1 |
| 1.24 | 2132098 | CABLE CONNECTION M16 TL6/7 FF VP. | 1 |
| 1.23 | 2132099 | CABLE CONNECTION M20 TL6/7 FF VP. | 1 |
| 1.22 | 2132100 | CABLE CONNECTION SMALL M40 TL6/7 FF VP. | 1 |
| 1.27 | 2132104 | COVER SIDE TL6/7 FF CPL.VP. | 1 |
| 1.26 | 2132452 | MODULE COVER/BUTTON TL6/7 FF VP. | 1 |

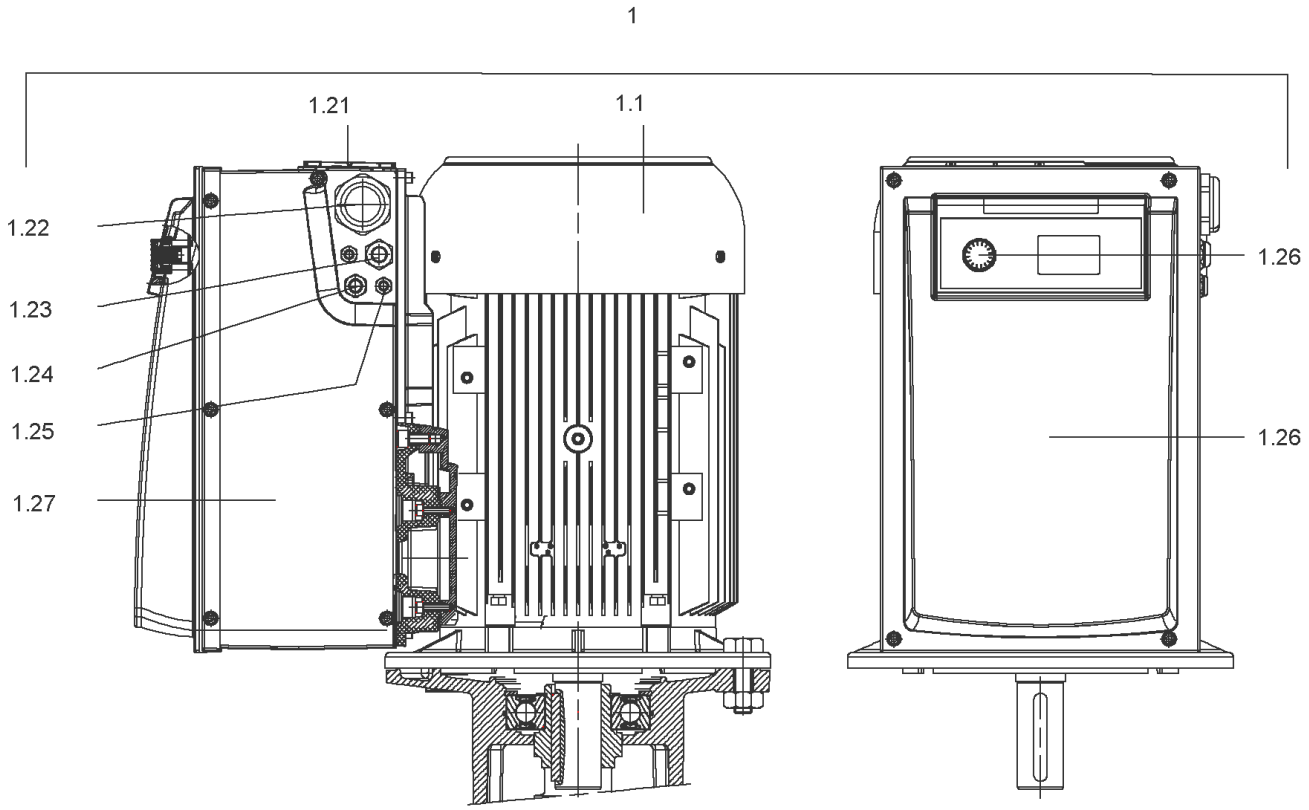
1
1.21
1.1
1.22
1.23
1.24
1.25
1.27
1.26
1.26

## DRIVE HELIX VE5203-IE4-WEG KIT (4218538)

| Item | Article no. | Description | Quantity |
|---|---|---|---|
| 1.1 | | M11-2T540P55V1-160F30-N42-ADAPT-IE4-WEG | 1 |
| | | SPARE PARTS MOTOR:ON REQUEST | 1 |
| 1.21 | 2132102 | FAN SMALL TL6/7 FF KIT | 1 |
| 1.25 | 2132097 | CABLE CONNECTION M12 TL6/7 FF VP. | 1 |
| 1.24 | 2132098 | CABLE CONNECTION M16 TL6/7 FF VP. | 1 |
| 1.23 | 2132099 | CABLE CONNECTION M20 TL6/7 FF VP. | 1 |
| 1.22 | 2132100 | CABLE CONNECTION SMALL M40 TL6/7 FF VP. | 1 |
| 1.27 | 2132104 | COVER SIDE TL6/7 FF CPL.VP. | 1 |
| 1.26 | 2132452 | MODULE COVER/BUTTON TL6/7 FF VP. | 1 |

## COUPLING D.20XD.38 FF300 KIT (4143966)

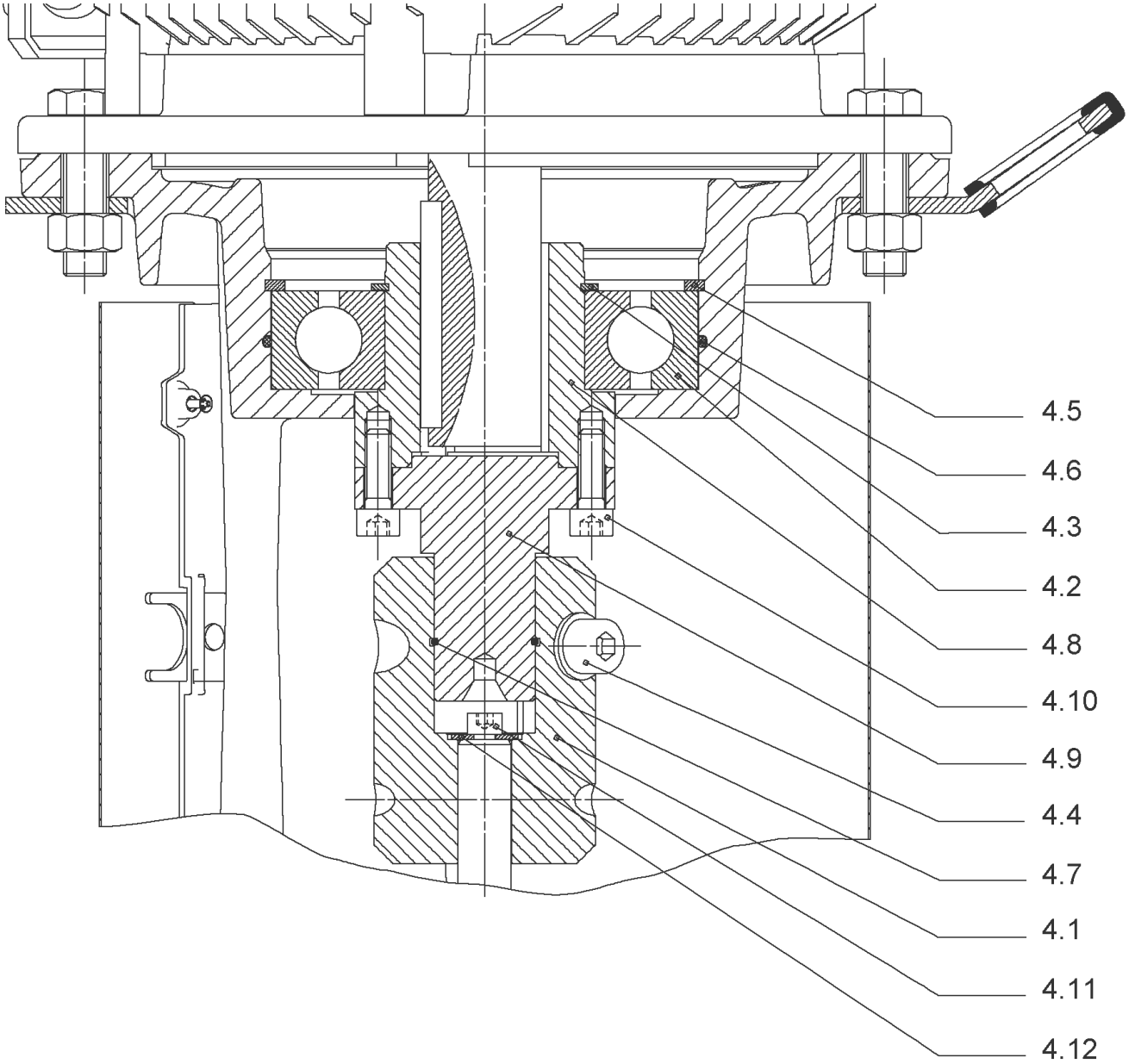

## COUPLING D.20XD.38 FF300 KIT (4143966)

| Item | Article no. | Description | Quantity |
|---|---|---|---|
| 4.1 | 4179590 | COUPLING 2 PARTS D.20XD.38XL115 VP. | 1 |
| 4.2 | 2123699 | BALL BEARING 6312/2Z-C4 (HT) VP. | 1 |
| 4.3 | 63428 | CIRCLIP-FOR-SHAFT-D60x2 | 1 |
| 4.4 | 2130991 | SCREW M12X30 ISO4762 8.8 ZN(4 PIECES) | 1 |
| 4.5 | 4032277 | CIRCLIP-HOLE-130x4 | 1 |
| 4.6 | 4006725 | O-RING ID.132,94x3,53 NBR70SR | 1 |
| 4.7 | 2130992 | RETAINING RING D.35xD.2,5 DIN7993 VP. | 1 |
| 4.8 | 4179591 | HUB D.42xD.60 VP. | 1 |
| 4.9 | 2130994 | SPACER D.38XD.55 VP. | 1 |
| 4.10 | 4094462 | SCREWS M10 ( 4 PIECES ) | 1 |
| 4.11 | 4233959 | SCREW M8x16 VP. | 1 |
| 4.12 | | SERRATED LOCK WASHER Ø8.2XØ25X35X2 | 1 |

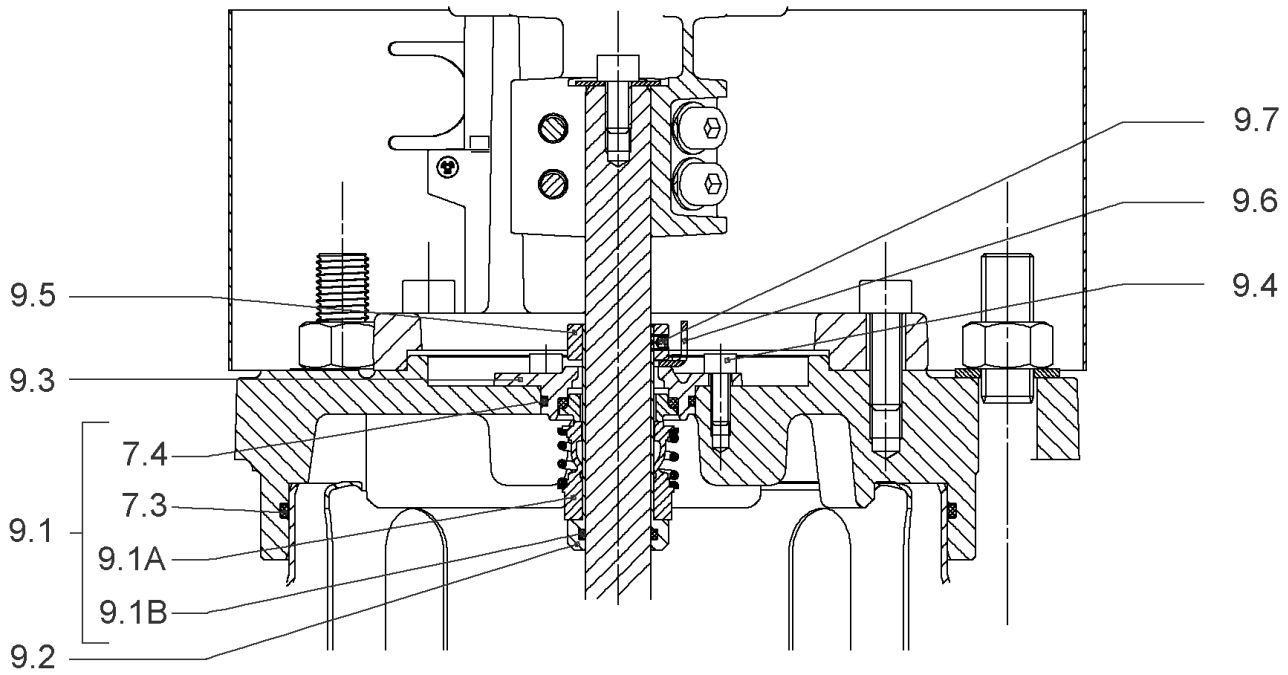
9.7
9.6
9.4
9.5
9.3
7.4
7.3
9.1
9.1A
9.1B
9.2

## CARTRIDGE HELIX22-36-52 O/E KIT (4143973)

| Item | Article no. | Description | Quantity |
|---|---|---|---|
| 9.1 | 4143974 | SEAL-KIT-HELIX22-36-52 O/E | 1 |
| 7.3 | 4179571 | > O-RING HOUSING PIPE HELIX22/36/52 VP. | 1 |
| 7.4 | 4179572 | > O-RING ID.42.52X2.62 EPDM VP. | 1 |
| 9.1A | 4179573 | > M.SEAL.HELIX22-36-52 O/E VP. | 1 |
| 9.1B | 4179574 | > O-RING ID.20x2.65 EPDM VP. | 1 |
| 9.2 | 4179566 | SHAFT SLEEVE D.20/20X60 1.4404 VP. | 1 |
| 9.3 | 4179567 | RING HOLDER Ø22 1.4301 VP. | 1 |
| 9.4 | 4176520 | SCREW CH M5x5 A4-70 ( 3PIECES ) | 1 |
| 9.5 | 4179568 | DRIVE RING D.31/22.1x11 MACH.VP. | 1 |
| 9.6 | 4179569 | TOOL M.S.CART.HELIX 8'' VP. | 1 |
| 9.7 | 4179570 | SCREW M6X16 ISO4762 8.8 GEOMET(4 PIECES) | 1 |

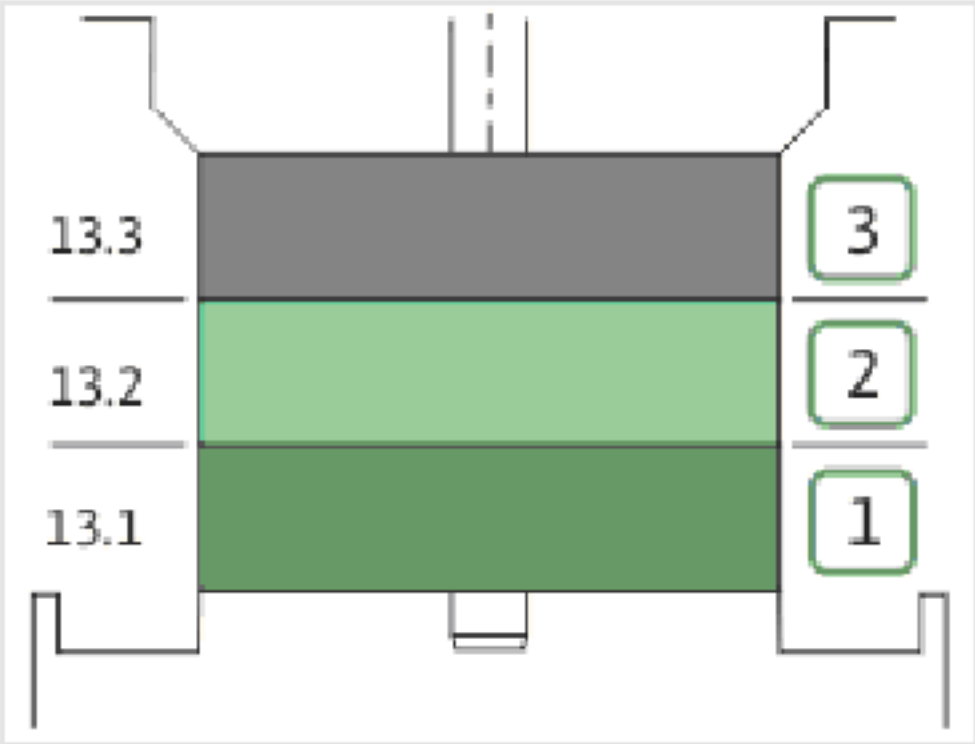
13.3
13.2
13.1
3
2
1

| Item | Article no. | Description | Quantity |
|---|---|---|---|
| 13.1 | 4164727 | INTERMEDIAIRE STAGE HELIX 52 1.4301 KIT | 1 |
| | | > SLEEVE-SPACER-D22XL30,42-316L | 1 |
| | | > MACH.BEARING-DIFFUSER+NR-M+52-304 | 1 |
| | | > SHAFT-SLEEVE-D26xD22x16-CW | 1 |
| | | > SPACER WASHER D22,3XD36 L3-316L | 1 |
| | | > IMPELLER-H2-M+52-304 | 1 |
| 13.1A | 4161200 | > NECK RING 1.STAGE HELIX V36/52 KIT | 1 |
| | | >> NECK-RING-M+36/52 | 1 |
| | | >> HYDRAULIC SUPPORT CAP M+36/52 304 | 1 |
| | | >> SCREW TCL M3X8 A4 POZIDRIV | 1 |
| 13.2 | 4164728 | INTERMEDIATE STAGE HELIX 52 1.4301 KIT | 1 |
| | | > MACH.STD-DIFFUSER+NR-M+52-304 | 1 |
| | | > IMPELLER-H5-M+52-304 | 1 |
| 13.3 | 4164729 | UPPER-STAGE HELIX 52 1.4301 KIT | 1 |
| | | > STOP COLLAR OF IMPELLER L27,6-Ø22-316L | 1 |
| | | > SLEEVE-SPACER-D22XL16,66-316L | 1 |
| | | > SPACER WASHER D22,3XD36 L3-316L | 1 |
| | | > IMPELLER-H2-M+52-304 | 1 |
| | | > MACH.STD-DISCHARGE-CHAMBER-M+52-304 | 1 |

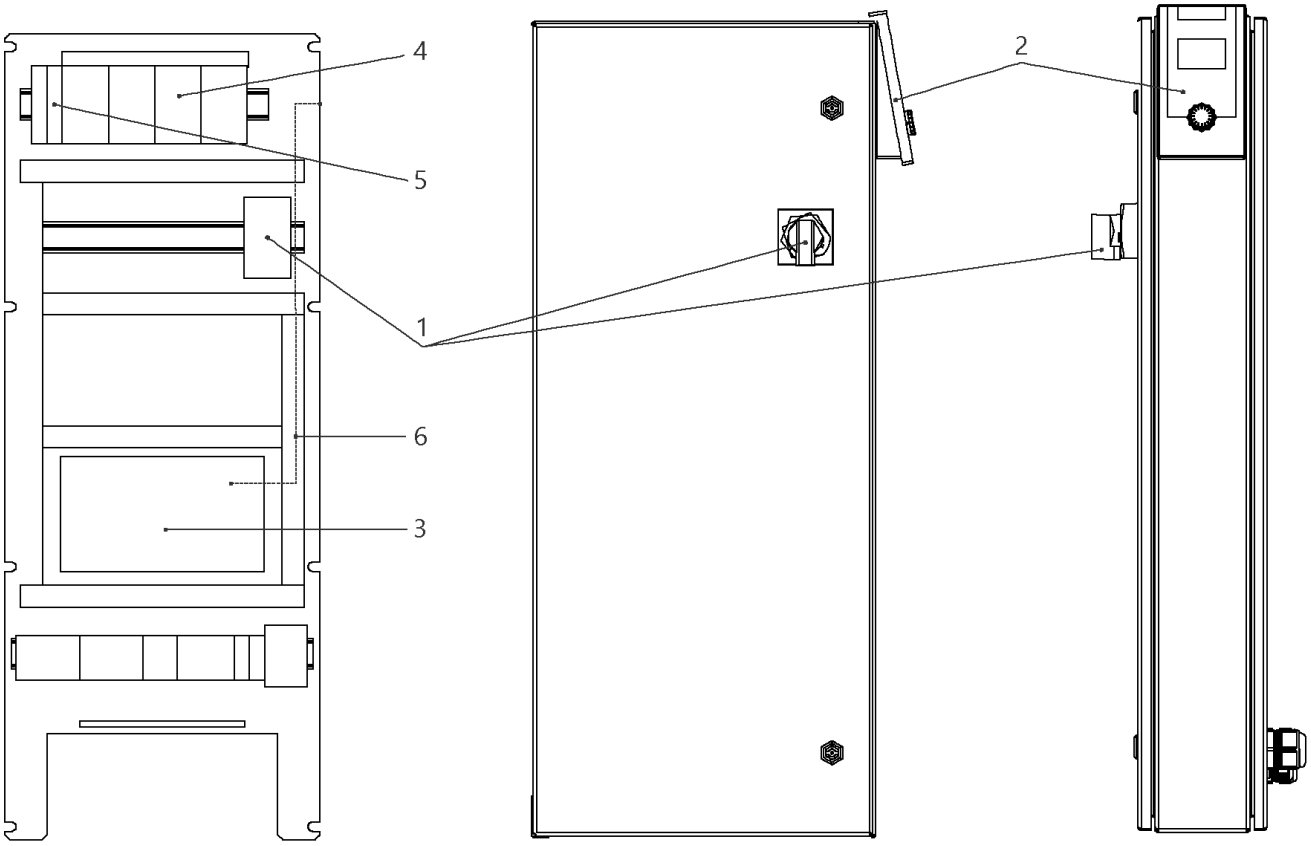
4
5
1
6
3
2

## W-CTRL-SCE-B-4x24A-T34-FM-ND4-AVC-PKG

| Item | Article no. | Description | Quantity |
|---|---|---|---|
| 1 | 2104468 | MAIN SWITCH OT125F3 L250 KIT | 1 |
| 2 | 4184784 | CONTROL PANEL HMI SC KIT | 1 |
| 2 | 4185259 | ASSEMBLY DISPLAY SC PKG VP. | 1 |
| Note: DISPLAY ALONE / PLATINE SEULE | | | |
| 3 | 4185257 | ASSEMBLY CPU SCe Booster VP. | 1 |
| 4 | 2051219 | AUTOM.CIRCUIT BREAKER S203 B32 FOR 15kW | 1 |
| 5 | 2046288 | CIRCUIT BREAKER S201 B16 | 1 |
| 6 | 4204004 | PATCH CABLE RJ45 CAT6 1,5M GREY SC-PANEL | 1 |

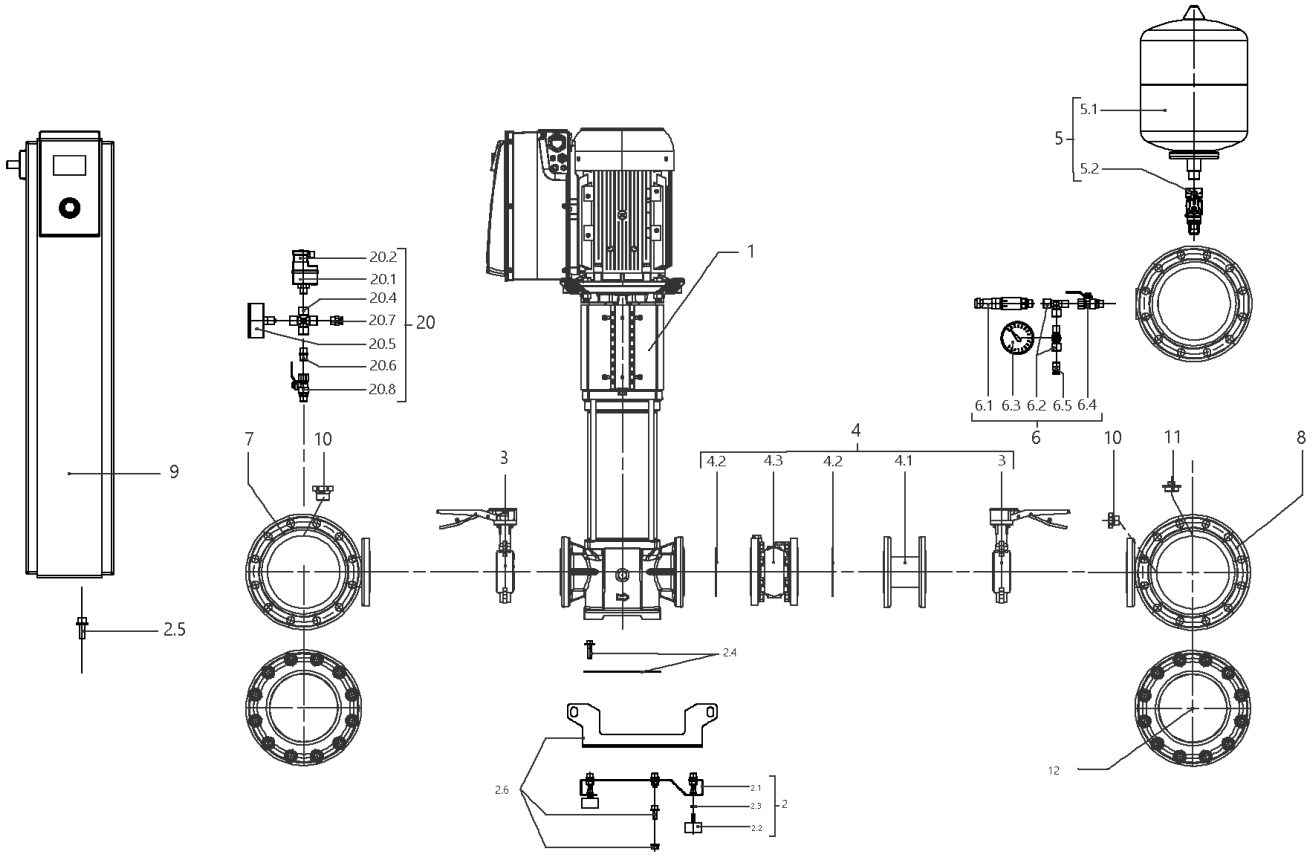
5.1
5
5.2
1
20.2
20.1
20.4
20.7
20
20.5
20.6
20.8
6.1 6.3 6.2 6.5 6.4
6
4
4.2 4.3 4.2 4.1
3
7
10
3
10
11
8
9
2.5
2.4
12
2.6
2.1
2.3
2
2.2

## SiBoost Smart 4HELIX VE5204 (2540935)

| Item | Article no. | Description | Quantity |
|---|---|---|---|
| 1 | | HELIX VE5204-4/16/E/KS/2G | 1 |
| 2 | 4204917 | BASE PLATE DE4 2250x420 M10 KIT | 1 |
| 2.1 | | > BASE_FR_4x22/36/52V_E500_L400_BOX150-250 | 1 |
| 2.2 | 2027881 | > VIBRATION DAMPER M.10X20 D.70 | 1 |
| 2.3 | 2028281 | > NUT M10 DIN936 (ISO4035) 17H VZ | 1 |
| 2.4 | 4204891 | > HOLDER PUMP Siboost Smart V36/52 KIT | 1 |
| 2.5 | 4197084 | > HOLDER SWITCHBOX WILO Smart Control KIT | 1 |
| 2.6 | 4203979 | > LIFTING Siboost HELIX 22/36 KIT | 1 |
| 3 | | BUTTERFLY VALVE 316 DN80 BLACK PS16 | 1 |
| 4 | 4204922 | DELIVERY SIDE Siboost Helix 52 KIT | 1 |
| 3 | | > BUTTERFLY VALVE 316 DN80 BLACK PS16 | 1 |
| 4.1 | | > FLANGE ADAPTER DN80x125 PN16 AISI304 | 1 |
| 4.2 | 2042897 | > GASKET DN80 PN40 DIN2690 | 1 |
| 4.3 | 4205934 | > CHECK-VALVE-FLANGES-PLUG-DN80-PN16-VP. | 1 |
| 5 | 4203983 | DIAPHREM TANK 8L/PN16 DIN4807/T5 KIT | 1 |
| 5.1 | 2045914 | > DIAPHREM TANK 8L TYP-DD 16BAR | 1 |
| 5.2 | 4189350 | > FLOW FITTING G3/4 FOR DIAPHRAG VESSEL VP | 1 |
| 6 | 4197076 | PRESSURE SENSOR/ GAUGE 0-16BAR KIT | 1 |
| 6.1 | 2085909 | > PRESS.SENSOR 1/4" 0-16BAR 4-20MA VP. | 1 |
| 6.2 | 4197077 | > T-PIECE 1/4" VP. | 1 |
| 6.3 | 2028692 | > PRESSURE GAUGE NG63-PN16-G1/4 | 1 |
| 6.4 | 2028291 | > BALL TAP R1/4" PN42 GIACOMINI R254DL | 1 |
| 6.5 | 2028691 | > BLOWGUN 1/4" MS 30BAR VP. | 1 |
| 7 | 4205938 | PIPE DE4 DN200-4xDN80+2x1/4x2000 VP. | 1 |
| 8 | 4205939 | PIPE DE4 DN200-4xDN80+2x1/4+1x3/4x2000 | 1 |
| 9 | | W-CTRL-SCE-B-4x32A-T34-FM-ND4-AVC-PKG | 1 |
| 10 | 4197079 | PLUG G1/4"x10 AISI304 KIT | 1 |
| 11 | 2032654 | PLUG R3/4" MS VIEGA 1751 | 1 |
| 12 | 4205941 | BLIND-FLANGE DN200 PN16-A2 KIT | 1 |
| | 4205942 | > FLAT GASKET D.220/273x2 DN200 PN16 C4430 | 1 |
| | | > NUT M20 DIN934 A2 1.4301 | 1 |
| | | > screw M20x85 DIN931 A2-70 | 1 |
| | | > WASHER A21 DIN125 A2 1.4301 | 1 |
| | | > FULL FLANGE ST.DN200 PN16 EN1092-1/05 A2 | 1 |

| Item | Article no. | Description | Quantity |
|---|---|---|---|
| | | > FLANGE COVER DN200 DIN3443 FORM A | 1 |
| 20 | | ASSEMBLY WMS. DE-EB. +VP | 1 |
| 20.1 | 2028652 | > PRESSURE SWITCH PS3-ASR 1/(1,3) VP. | 1 |
| 20.2 | 2130983 | > PLUG PS3-415 WITH KABEL 1,5M 2NO VP. | 1 |
| 20.4 | 2028290 | > CROSSPIECE R1/4" MS-NICKEL | 1 |
| 20.5 | 2028687 | > PRESSURE GAUGE NG63 R1/4" HI.0-6BAR | 1 |
| 20.6 | 2054268 | > DUAL NIPPLE G1/4" x G1/4" MS VP. | 1 |
| 20.7 | 2028691 | > BLOWGUN 1/4" MS 30BAR VP. | 1 |
| 20.8 | 2028291 | > BALL TAP R1/4" PN42 GIACOMINI R254DL | 1 |

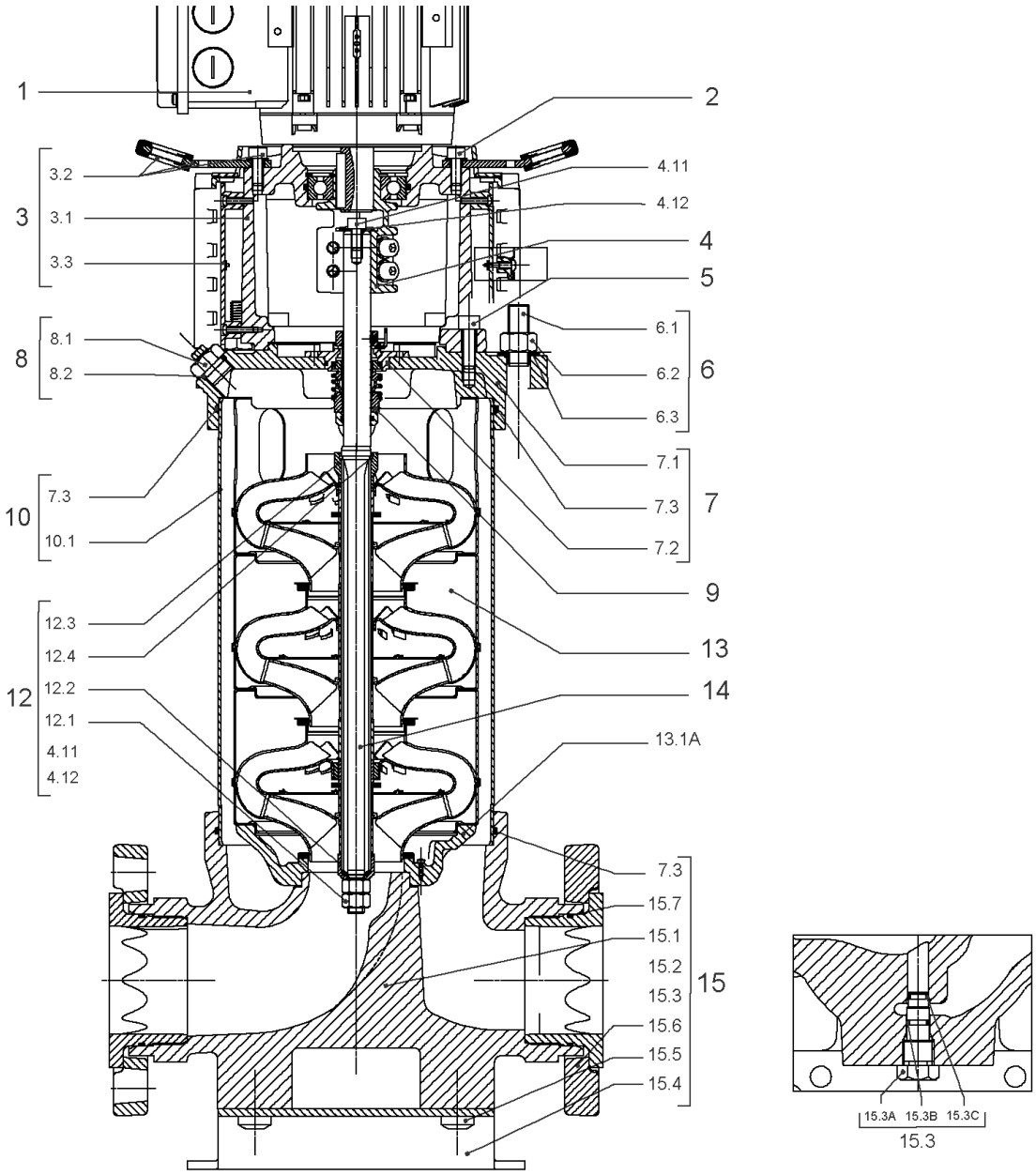
1
2
3
3.2
3.1
3.3
4.11
4.12
4
5
8
8.1
8.2
6.1
6.2
6.3
6
7.1
7.3
7.2
7
10
7.3
10.1
9
12.3
12.4
12.2
12.1
4.11
4.12
12
13
14
13.1A
7.3
15.7
15.1
15.2
15.3
15.6
15.5
15.4
15
15.3A
15.3B
15.3C
15.3

| Item | Article no. | Description | Quantity |
|---|---|---|---|
| 1 | | DRIVE HELIX VE5204-IE2-ARC KIT | 1 |
| Note: no longer available/nicht mehrlieferbar/n'est plus disponible | | | |
| 1 | 4218533 | DRIVE HELIX VE5204-IE4-WEG KIT | 1 |
| Note: MOTOR BRAND WEG | | | |
| 2 | 4179586 | SCREW M16X60 (4 PIECES) | 1 |
| 3 | 4157721 | LANTERN HELIX 22/36 FF300 BB6312 KIT | 1 |
| 3.1 | | > LANTERN FF300 M+ GJL MACHINED+CATA 6312 | 1 |
| 3.2 | 4179589 | > EYELET CPL.FF300 HELIX(4 PIECES) | 1 |
| 3.3 | 4143969 | > COUPLING PROTECT HELIX FF KIT | 1 |
| 4 | 4143966 | COUPLING D.20XD.38 FF300 KIT | 1 |
| 5 | 4157725 | SCREW M10X40 (4 PIECES) | 1 |
| 6 | 4179919 | STUD BOLT M16X500 KIT | 1 |
| 6.1 | | > TIE BOLT M16-500x24x44-1.4057 | 1 |
| 6.2 | 4179562 | > NUT M16 8.8 ISO4032 (4 PIECES) | 1 |
| 6.3 | 4097852 | > WASHER-CS-16.4-32-2.8-NFE25-511-A2 | 1 |
| 7 | 4179565 | END SHIELD HELIX 8'' EPDM KIT | 1 |
| 7.1 | | > END SHIELD M+ GJL MACHINED+CATA | 1 |
| 7.2 | 4179564 | > O-RING D.42.52x2.62 EPDM VP. | 1 |
| 7.3 | 4179571 | > O-RING HOUSING PIPE HELIX22/36/52 VP. | 1 |
| 8 | 4186377 | FILING/PURGING PLUG 304 HELIX KIT | 1 |
| 8.1 | | > FILLING/VENTING-PLUG-MVI8/10"-304 | 1 |
| 8.2 | 4032291 | > O-RING 17x3 EPDM KTW/WRC | 1 |
| 9 | 4143973 | CARTRIDGE HELIX22-36-52 O/E KIT | 1 |
| 10 | 4179920 | HOUSING PIPE D204 X 430 1.4301 KIT | 1 |
| 7.3 | 4179571 | > O-RING HOUSING PIPE HELIX22/36/52 VP. | 1 |
| 10.1 | | > HOUSING-PIPE Ø204-M+5204-304 | 1 |
| 11 | 4179583 | CENTRALIZER HELIX 8'' 52 VP. | 1 |
| 12 | 4164724 | SHAFT EQUIPMENT HELIX V52 KIT | 1 |
| 13 | | HYDRAULIC HELIX V 5204 | 1 |
| 14 | 4180848 | SHAFT D.22X604 1.4057 VP. | 1 |
| 15 | 4186388 | EQUIPED HOUSING HELIX FIRST DN80 DWA KIT | 1 |
| 15.1 | | > PUMP CASING MONO.GJL M+8" DN80 DWA | 1 |
| 15.2 | | > HYD.SUP.M+8" ONE PIECE HOUSING N80 DWA | 1 |
| 15.3 | 4106048 | > DRAIN/PRIMING PLUG EPDM HELIX FIRST KIT | 1 |

| Item | Article no. | Description | Quantity |
|---|---|---|---|
| 15.3A | | >> DRAIN AND PRIMING PLUG-VMI10"-304 | 1 |
| 15.3B | 4032293 | >> O-RING-10x3-EPDM-KTW/WRC | 1 |
| 15.3C | 4233957 | >> O-RING ID.9 EPDM VP. | 1 |
| 7.3 | 4179571 | > O-RING HOUSING PIPE HELIX22/36/52 VP. | 1 |
| 13.1A | 4161200 | > NECK RING 1.STAGE HELIX V36/52 KIT | 1 |
| | | >> NECK-RING-M+36/52 | 1 |
| | | >> HYDRAULIC SUPPORT CAP M+36/52 304 | 1 |
| | | >> SCREW TCL M3X8 A4 POZIDRIV | 1 |

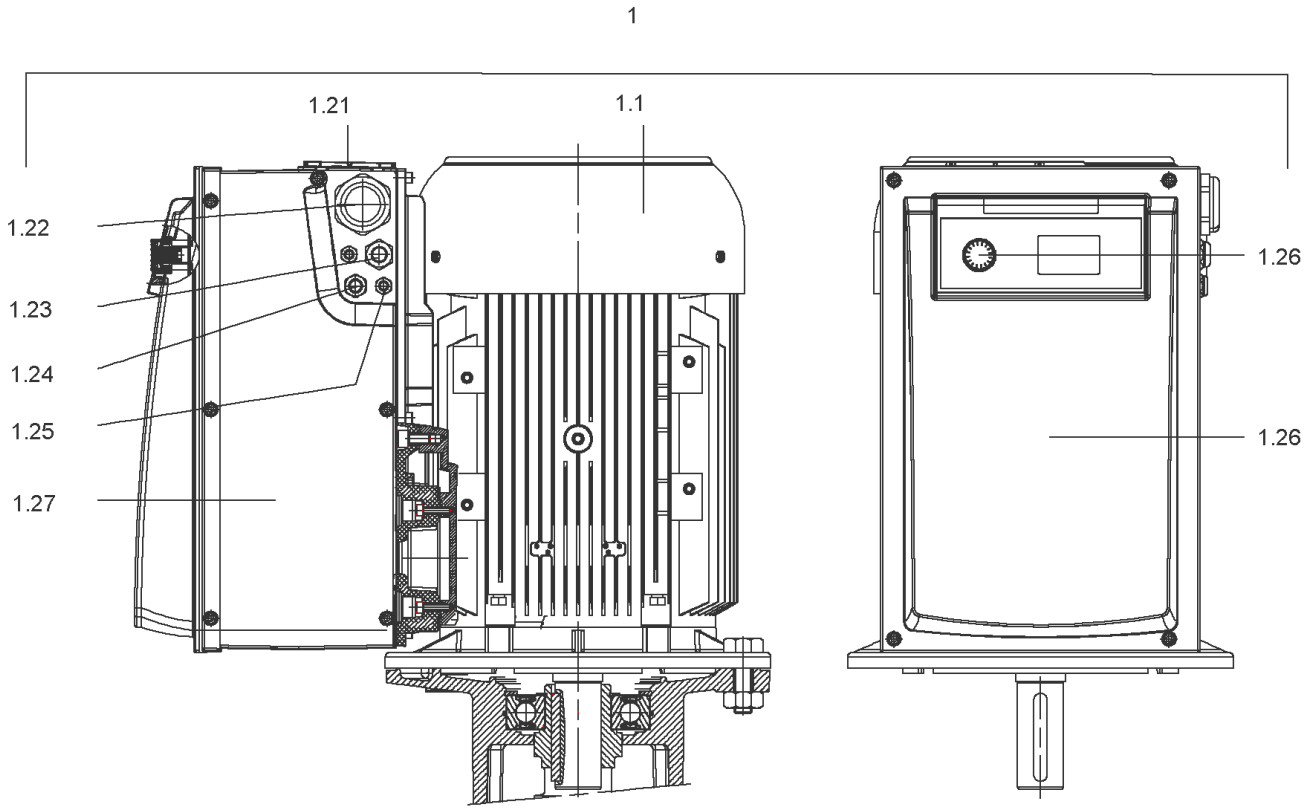
1
1.21
1.1
1.22
1.23
1.24
1.25
1.27
1.26
1.26

## DRIVE HELIX VE5204-IE2-ARC KIT

| Item | Article no. | Description | Quantity |
|---|---|---|---|
| 1.1 | | M15-2T540P55V1-160F300-N42-IE2 | 1 |
| | | SPARE PARTS MOTOR:ON REQUEST | 1 |
| 1.21 | 2132102 | FAN SMALL TL6/7 FF KIT | 1 |
| 1.25 | 2132097 | CABLE CONNECTION M12 TL6/7 FF VP. | 1 |
| 1.24 | 2132098 | CABLE CONNECTION M16 TL6/7 FF VP. | 1 |
| 1.23 | 2132099 | CABLE CONNECTION M20 TL6/7 FF VP. | 1 |
| 1.22 | 2132100 | CABLE CONNECTION SMALL M40 TL6/7 FF VP. | 1 |
| 1.27 | 2132104 | COVER SIDE TL6/7 FF CPL.VP. | 1 |
| 1.26 | 2132452 | MODULE COVER/BUTTON TL6/7 FF VP. | 1 |

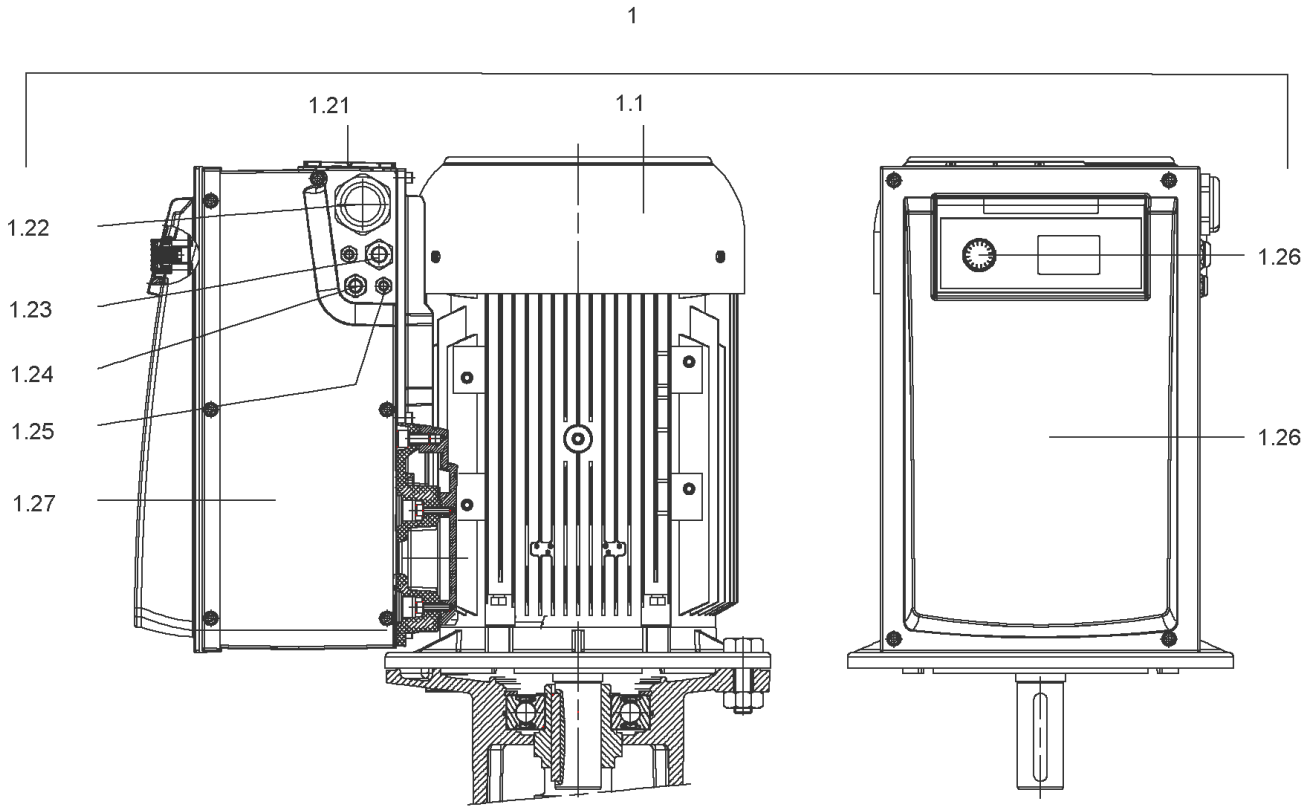
1
1.21
1.1
1.22
1.23
1.24
1.25
1.27
1.26
1.26

## DRIVE HELIX VE5204-IE4-WEG KIT (4218533)

| Item | Article no. | Description | Quantity |
|---|---|---|---|
| 1.1 | | M15-2T540P55V1-160F30-N42-ADAPT-IE4-WEG | 1 |
| | | SPARE PARTS MOTOR:ON REQUEST | 1 |
| 1.21 | 2132102 | FAN SMALL TL6/7 FF KIT | 1 |
| 1.25 | 2132097 | CABLE CONNECTION M12 TL6/7 FF VP. | 1 |
| 1.24 | 2132098 | CABLE CONNECTION M16 TL6/7 FF VP. | 1 |
| 1.23 | 2132099 | CABLE CONNECTION M20 TL6/7 FF VP. | 1 |
| 1.22 | 2132100 | CABLE CONNECTION SMALL M40 TL6/7 FF VP. | 1 |
| 1.27 | 2132104 | COVER SIDE TL6/7 FF CPL.VP. | 1 |
| 1.26 | 2132452 | MODULE COVER/BUTTON TL6/7 FF VP. | 1 |

## COUPLING D.20XD.38 FF300 KIT (4143966)

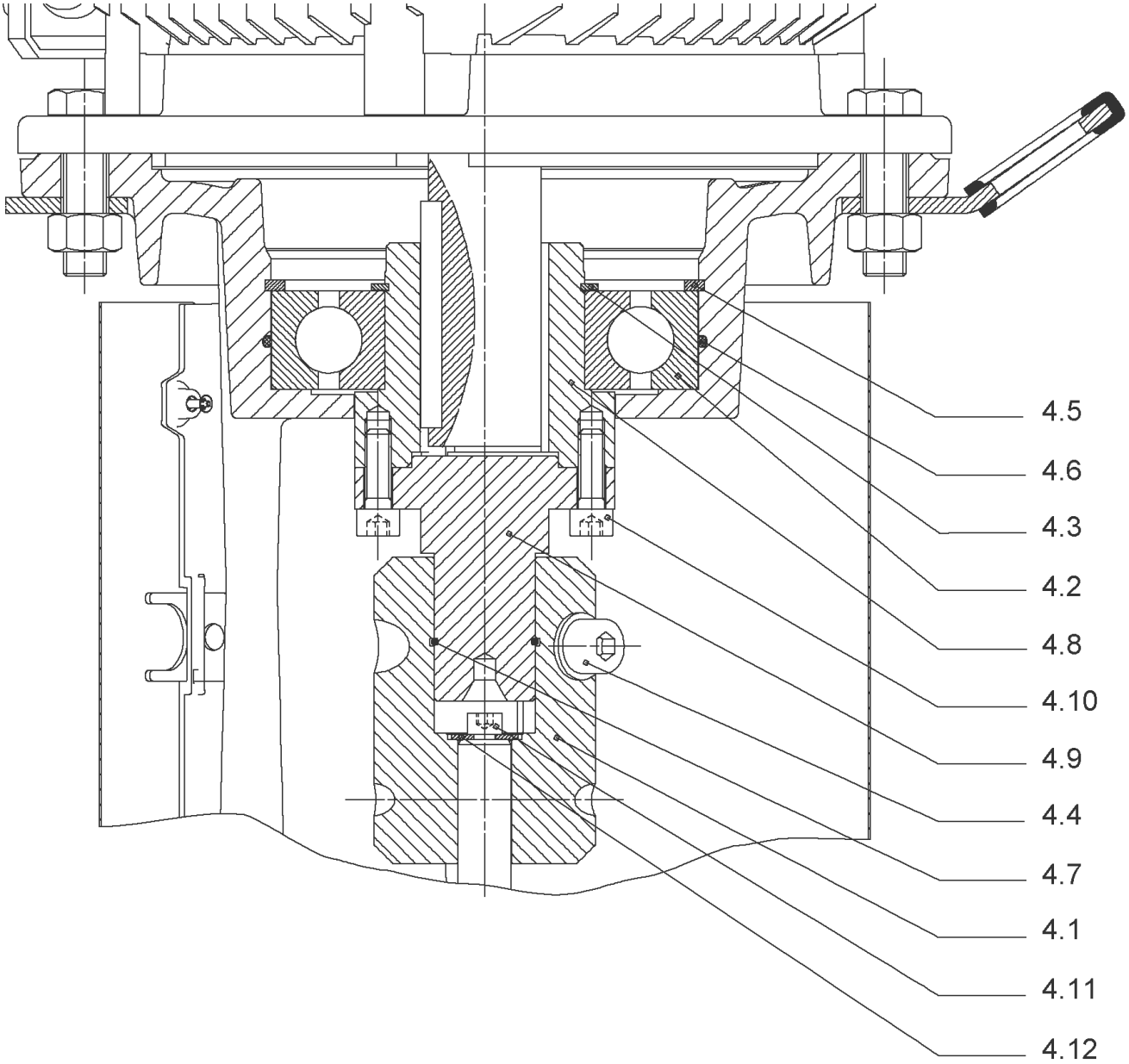

## COUPLING D.20XD.38 FF300 KIT (4143966)

| Item | Article no. | Description | Quantity |
|---|---|---|---|
| 4.1 | 4179590 | COUPLING 2 PARTS D.20XD.38XL115 VP. | 1 |
| 4.2 | 2123699 | BALL BEARING 6312/2Z-C4 (HT) VP. | 1 |
| 4.3 | 63428 | CIRCLIP-FOR-SHAFT-D60x2 | 1 |
| 4.4 | 2130991 | SCREW M12X30 ISO4762 8.8 ZN(4 PIECES) | 1 |
| 4.5 | 4032277 | CIRCLIP-HOLE-130x4 | 1 |
| 4.6 | 4006725 | O-RING ID.132,94x3,53 NBR70SR | 1 |
| 4.7 | 2130992 | RETAINING RING D.35xD.2,5 DIN7993 VP. | 1 |
| 4.8 | 4179591 | HUB D.42xD.60 VP. | 1 |
| 4.9 | 2130994 | SPACER D.38XD.55 VP. | 1 |
| 4.10 | 4094462 | SCREWS M10 ( 4 PIECES ) | 1 |
| 4.11 | 4233959 | SCREW M8x16 VP. | 1 |
| 4.12 | | SERRATED LOCK WASHER Ø8.2XØ25X35X2 | 1 |

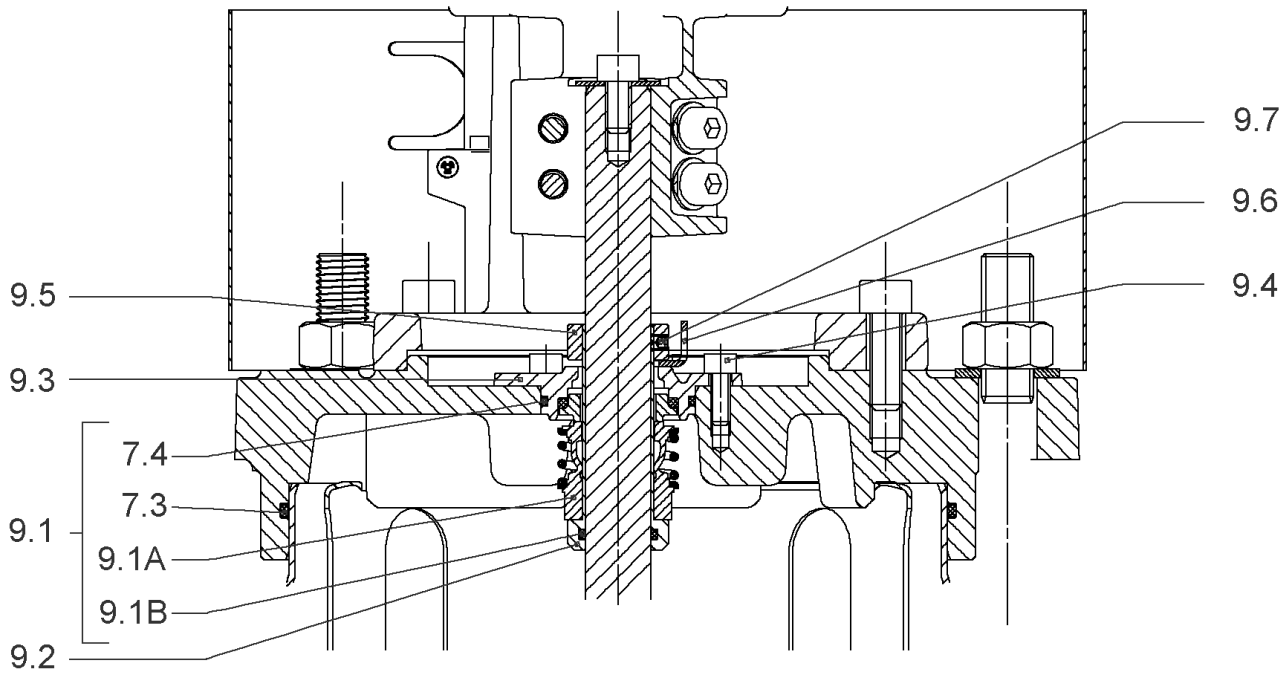
9.7
9.6
9.4
9.5
9.3
7.4
7.3
9.1
9.1A
9.1B
9.2

## CARTRIDGE HELIX22-36-52 O/E KIT (4143973)

| Item | Article no. | Description | Quantity |
|---|---|---|---|
| 9.1 | 4143974 | SEAL-KIT-HELIX22-36-52 O/E | 1 |
| 7.3 | 4179571 | > O-RING HOUSING PIPE HELIX22/36/52 VP. | 1 |
| 7.4 | 4179572 | > O-RING ID.42.52X2.62 EPDM VP. | 1 |
| 9.1A | 4179573 | > M.SEAL.HELIX22-36-52 O/E VP. | 1 |
| 9.1B | 4179574 | > O-RING ID.20x2.65 EPDM VP. | 1 |
| 9.2 | 4179566 | SHAFT SLEEVE D.20/20X60 1.4404 VP. | 1 |
| 9.3 | 4179567 | RING HOLDER Ø22 1.4301 VP. | 1 |
| 9.4 | 4176520 | SCREW CH M5x5 A4-70 ( 3PIECES ) | 1 |
| 9.5 | 4179568 | DRIVE RING D.31/22.1x11 MACH.VP. | 1 |
| 9.6 | 4179569 | TOOL M.S.CART.HELIX 8'' VP. | 1 |
| 9.7 | 4179570 | SCREW M6X16 ISO4762 8.8 GEOMET(4 PIECES) | 1 |

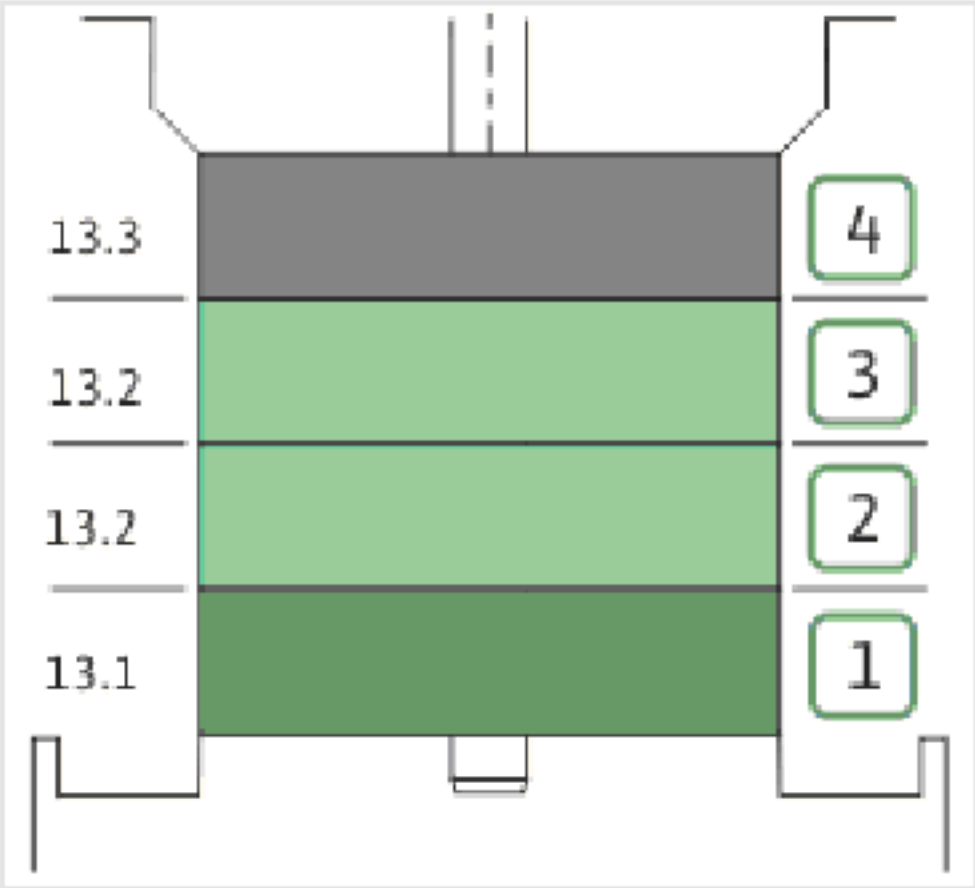
13.3
13.2
13.2
13.1
4
3
2
1

| Item | Article no. | Description | Quantity |
|---|---|---|---|
| 13.1 | 4164727 | INTERMEDIAIRE STAGE HELIX 52 1.4301 KIT | 1 |
| | | > SLEEVE-SPACER-D22XL30,42-316L | 1 |
| | | > MACH.BEARING-DIFFUSER+NR-M+52-304 | 1 |
| | | > SHAFT-SLEEVE-D26xD22x16-CW | 1 |
| | | > SPACER WASHER D22,3XD36 L3-316L | 1 |
| | | > IMPELLER-H2-M+52-304 | 1 |
| 13.1A | 4161200 | > NECK RING 1.STAGE HELIX V36/52 KIT | 1 |
| | | >> NECK-RING-M+36/52 | 1 |
| | | >> HYDRAULIC SUPPORT CAP M+36/52 304 | 1 |
| | | >> SCREW TCL M3X8 A4 POZIDRIV | 1 |
| 13.2 | 4164728 | INTERMEDIATE STAGE HELIX 52 1.4301 KIT | 1 |
| | | > MACH.STD-DIFFUSER+NR-M+52-304 | 1 |
| | | > IMPELLER-H5-M+52-304 | 1 |
| 13.3 | 4164729 | UPPER-STAGE HELIX 52 1.4301 KIT | 1 |
| | | > STOP COLLAR OF IMPELLER L27,6-Ø22-316L | 1 |
| | | > SLEEVE-SPACER-D22XL16,66-316L | 1 |
| | | > SPACER WASHER D22,3XD36 L3-316L | 1 |
| | | > IMPELLER-H2-M+52-304 | 1 |
| | | > MACH.STD-DISCHARGE-CHAMBER-M+52-304 | 1 |

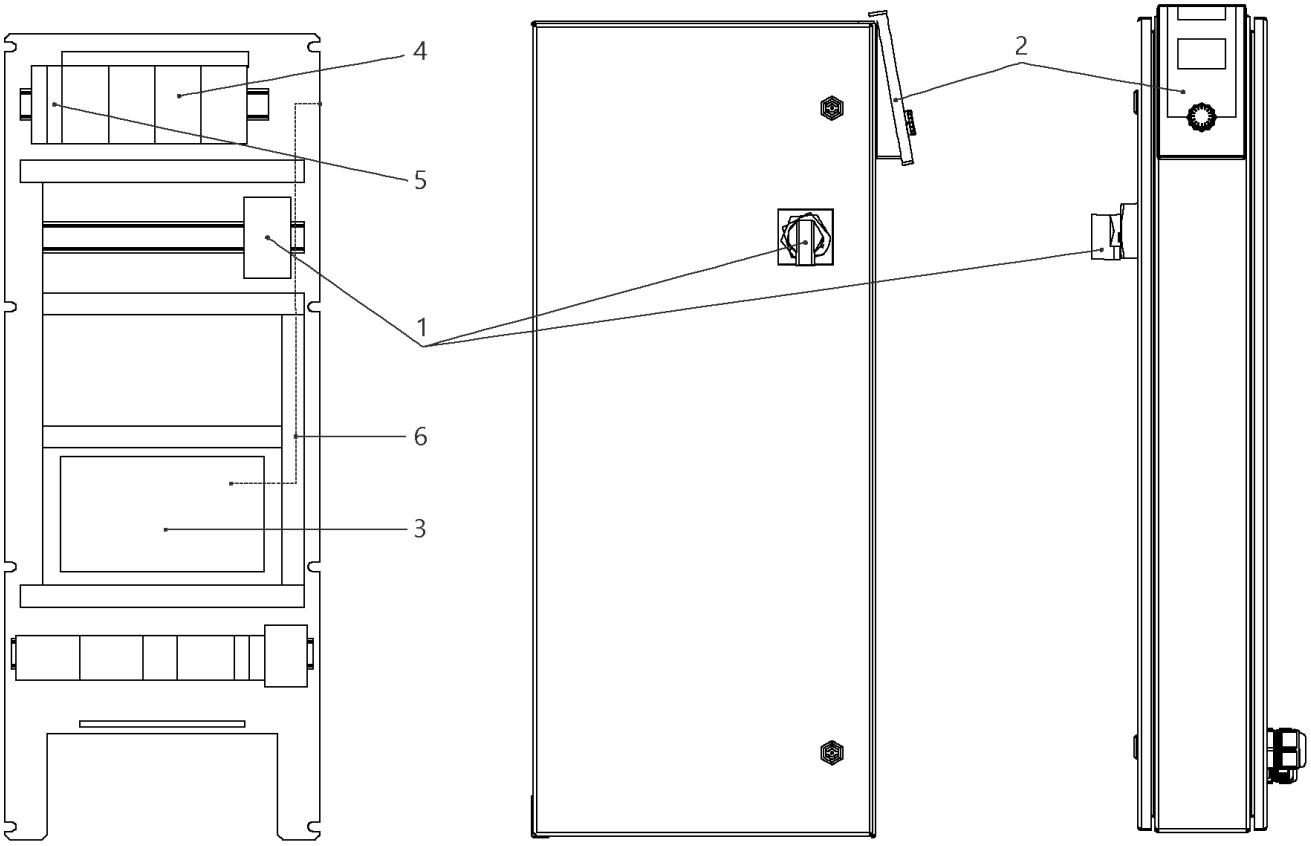
4
5
1
6
3
2

## W-CTRL-SCE-B-4x32A-T34-FM-ND4-AVC-PKG

| Item | Article no. | Description | Quantity |
|---|---|---|---|
| 1 | 2050183 | MAIN SWITCH OT160E3-2 VP. | 1 |
| 1 | 2090420 | HANDLE OHY 65J6/SHAFT OXP6x290 KIT | 1 |
| 2 | 4184784 | CONTROL PANEL HMI SC KIT | 1 |
| 2 | 4185259 | ASSEMBLY DISPLAY SC PKG VP. | 1 |
| Note: DISPLAY ALONE / PLATINE SEULE | | | |
| 3 | 4185257 | ASSEMBLY CPU SCe Booster VP. | 1 |
| 4 | 2051220 | AUTOM.CIRCUIT BREAKER S203 B40 FOR18,5kW | 1 |
| 5 | 2046288 | CIRCUIT BREAKER S201 B16 | 1 |
| 6 | 4204004 | PATCH CABLE RJ45 CAT6 1,5M GREY SC-PANEL | 1 |

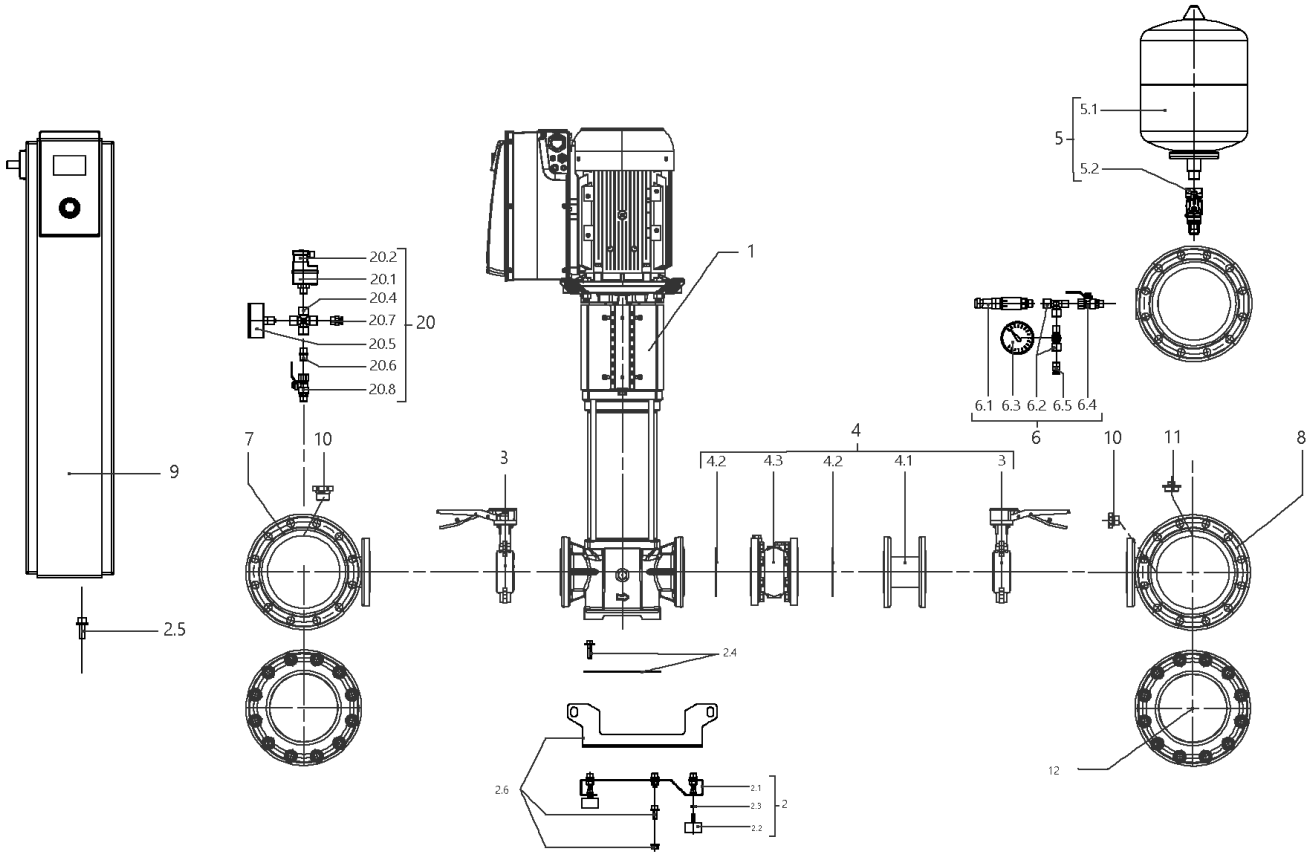
5.1
5
5.2
1
20.2
20.1
20.4
20.7
20
20.5
20.6
20.8
6.1 6.3 6.2 6.5 6.4
6
4
4.2 4.3 4.2 4.1
3
7
10
3
10
11
8
9
2.5
2.4
12
2.6
2.1
2.3
2
2.2

## SiBoost Smart 4HELIX VE5205 (2540936)

| Item | Article no. | Description | Quantity |
|---|---|---|---|
| 1 | | HELIX VE5205-4/16/E/KS/2G | 1 |
| 2 | 4204917 | BASE PLATE DE4 2250x420 M10 KIT | 1 |
| 2.1 | | > BASE_FR_4x22/36/52V_E500_L400_BOX150-250 | 1 |
| 2.2 | 2027881 | > VIBRATION DAMPER M.10X20 D.70 | 1 |
| 2.3 | 2028281 | > NUT M10 DIN936 (ISO4035) 17H VZ | 1 |
| 2.4 | 4204891 | > HOLDER PUMP Siboost Smart V36/52 KIT | 1 |
| 2.5 | 4197084 | > HOLDER SWITCHBOX WILO Smart Control KIT | 1 |
| 2.6 | 4203979 | > LIFTING Siboost HELIX 22/36 KIT | 1 |
| 3 | | BUTTERFLY VALVE 316 DN80 BLACK PS16 | 1 |
| 4 | 4204922 | DELIVERY SIDE Siboost Helix 52 KIT | 1 |
| 3 | | > BUTTERFLY VALVE 316 DN80 BLACK PS16 | 1 |
| 4.1 | | > FLANGE ADAPTER DN80x125 PN16 AISI304 | 1 |
| 4.2 | 2042897 | > GASKET DN80 PN40 DIN2690 | 1 |
| 4.3 | 4205934 | > CHECK-VALVE-FLANGES-PLUG-DN80-PN16-VP. | 1 |
| 5 | 4203983 | DIAPHREM TANK 8L/PN16 DIN4807/T5 KIT | 1 |
| 5.1 | 2045914 | > DIAPHREM TANK 8L TYP-DD 16BAR | 1 |
| 5.2 | 4189350 | > FLOW FITTING G3/4 FOR DIAPHRAG VESSEL VP | 1 |
| 6 | 4197076 | PRESSURE SENSOR/ GAUGE 0-16BAR KIT | 1 |
| 6.1 | 2085909 | > PRESS.SENSOR 1/4" 0-16BAR 4-20MA VP. | 1 |
| 6.2 | 4197077 | > T-PIECE 1/4" VP. | 1 |
| 6.3 | 2028692 | > PRESSURE GAUGE NG63-PN16-G1/4 | 1 |
| 6.4 | 2028291 | > BALL TAP R1/4" PN42 GIACOMINI R254DL | 1 |
| 6.5 | 2028691 | > BLOWGUN 1/4" MS 30BAR VP. | 1 |
| 7 | 4205938 | PIPE DE4 DN200-4xDN80+2x1/4x2000 VP. | 1 |
| 8 | 4205939 | PIPE DE4 DN200-4xDN80+2x1/4+1x3/4x2000 | 1 |
| 9 | | W-CTRL-SCE-B-4x37,5A-T34-FM-ND4-AVC-PKG | 1 |
| 10 | 4197079 | PLUG G1/4"x10 AISI304 KIT | 1 |
| 11 | 2032654 | PLUG R3/4" MS VIEGA 1751 | 1 |
| 12 | 4205941 | BLIND-FLANGE DN200 PN16-A2 KIT | 1 |
| | 4205942 | > FLAT GASKET D.220/273x2 DN200 PN16 C4430 | 1 |
| | | > NUT M20 DIN934 A2 1.4301 | 1 |
| | | > screw M20x85 DIN931 A2-70 | 1 |
| | | > WASHER A21 DIN125 A2 1.4301 | 1 |
| | | > FULL FLANGE ST.DN200 PN16 EN1092-1/05 A2 | 1 |

| Item | Article no. | Description | Quantity |
|---|---|---|---|
| | | > FLANGE COVER DN200 DIN3443 FORM A | 1 |
| 20 | | ASSEMBLY WMS. DE-EB. +VP | 1 |
| 20.1 | 2028652 | > PRESSURE SWITCH PS3-ASR 1/(1,3) VP. | 1 |
| 20.2 | 2130983 | > PLUG PS3-415 WITH KABEL 1,5M 2NO VP. | 1 |
| 20.4 | 2028290 | > CROSSPIECE R1/4" MS-NICKEL | 1 |
| 20.5 | 2028687 | > PRESSURE GAUGE NG63 R1/4" HI.0-6BAR | 1 |
| 20.6 | 2054268 | > DUAL NIPPLE G1/4" x G1/4" MS VP. | 1 |
| 20.7 | 2028691 | > BLOWGUN 1/4" MS 30BAR VP. | 1 |
| 20.8 | 2028291 | > BALL TAP R1/4" PN42 GIACOMINI R254DL | 1 |

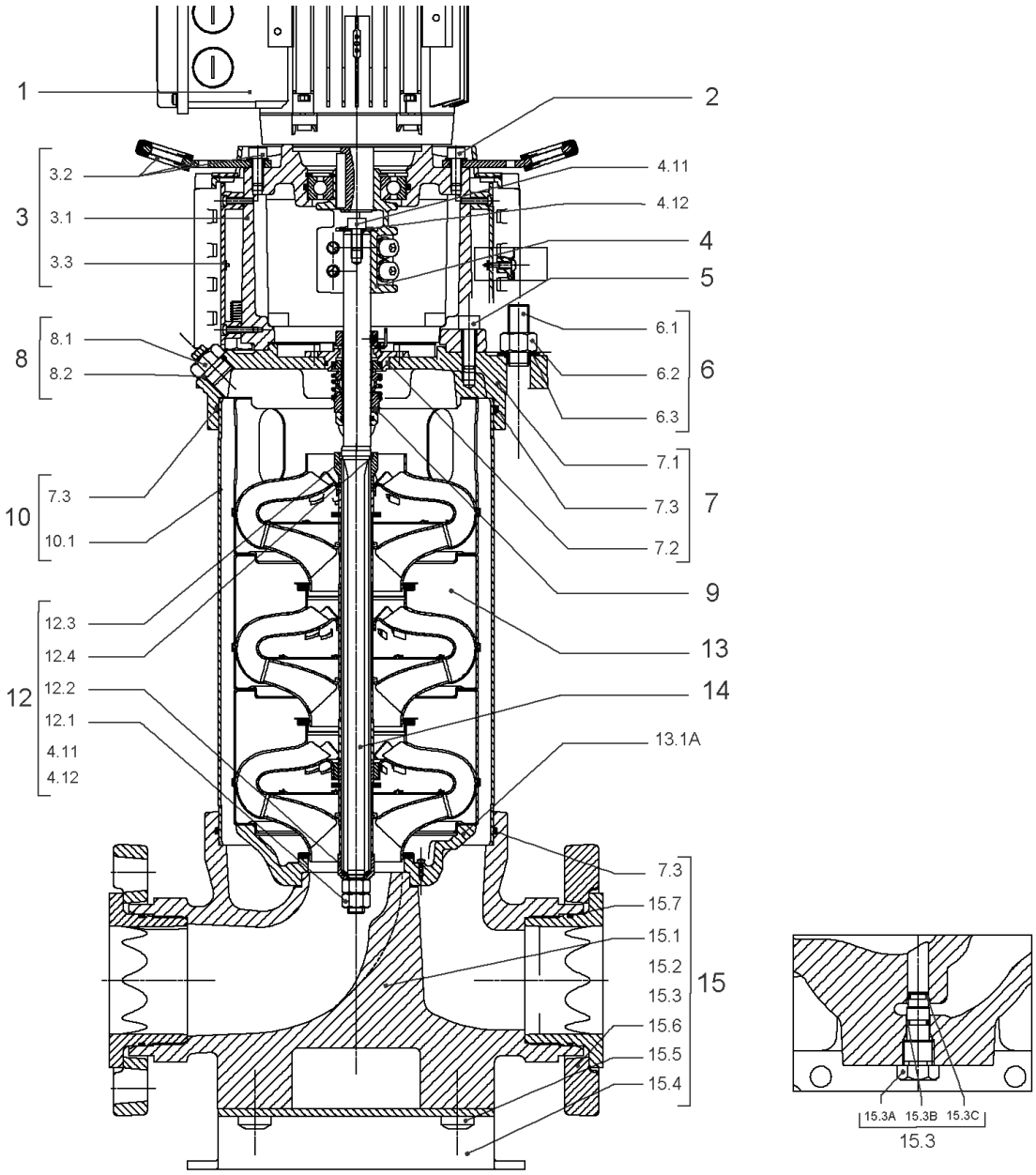
1
2
3
3.2
3.1
3.3
4.11
4.12
4
5
8
8.1
8.2
6.1
6.2
6.3
6
7.1
7.3
7.2
7
10
7.3
10.1
9
12.3
12.4
12.2
12.1
4.11
4.12
12
13
14
13.1A
7.3
15.7
15.1
15.2
15.3
15.6
15.5
15.4
15
15.3A
15.3B
15.3C
15.3

| Item | Article no. | Description | Quantity |
|---|---|---|---|
| 1 | | DRIVE HELIX VE5205-IE2-ARC KIT | 1 |
| Note: no longer available/nicht mehrlieferbar/n'est plus disponible | | | |
| 1 | 4213695 | DRIVE HELIX VE5205-IE4-WEG KIT | 1 |
| Note: MOTOR BRAND WEG | | | |
| 2 | 4179586 | SCREW M16X60 (4 PIECES) | 1 |
| 3 | 4157721 | LANTERN HELIX 22/36 FF300 BB6312 KIT | 1 |
| 3.1 | | > LANTERN FF300 M+ GJL MACHINED+CATA 6312 | 1 |
| 3.2 | 4179589 | > EYELET CPL.FF300 HELIX(4 PIECES) | 1 |
| 3.3 | 4143969 | > COUPLING PROTECT HELIX FF KIT | 1 |
| 4 | 4143966 | COUPLING D.20XD.38 FF300 KIT | 1 |
| 5 | 4157725 | SCREW M10X40 (4 PIECES) | 1 |
| 6 | 4179923 | STUD BOLT M16X600 KIT | 1 |
| 6.1 | | > TIE BOLT M16-600x24x44-1.4057 | 1 |
| 6.2 | 4179562 | > NUT M16 8.8 ISO4032 (4 PIECES) | 1 |
| 6.3 | 4097852 | > WASHER-CS-16.4-32-2.8-NFE25-511-A2 | 1 |
| 7 | 4179565 | END SHIELD HELIX 8'' EPDM KIT | 1 |
| 7.1 | | > END SHIELD M+ GJL MACHINED+CATA | 1 |
| 7.2 | 4179564 | > O-RING D.42.52x2.62 EPDM VP. | 1 |
| 7.3 | 4179571 | > O-RING HOUSING PIPE HELIX22/36/52 VP. | 1 |
| 8 | 4186377 | FILING/PURGING PLUG 304 HELIX KIT | 1 |
| 8.1 | | > FILLING/VENTING-PLUG-MVI8/10"-304 | 1 |
| 8.2 | 4032291 | > O-RING 17x3 EPDM KTW/WRC | 1 |
| 9 | 4143973 | CARTRIDGE HELIX22-36-52 O/E KIT | 1 |
| 10 | 4179924 | HOUSING PIPE D.204X530 1.4301 KIT | 1 |
| 7.3 | 4179571 | > O-RING HOUSING PIPE HELIX22/36/52 VP. | 1 |
| 10.1 | | > HOUSING-PIPE Ø204-M+3607/5205-304 | 1 |
| 11 | 4179583 | CENTRALIZER HELIX 8'' 52 VP. | 1 |
| 12 | 4164724 | SHAFT EQUIPMENT HELIX V52 KIT | 1 |
| 13 | | HYDRAULIC HELIX V 5205 | 1 |
| 14 | 4179926 | SHAFTS D.22X704 1.4057 VP. | 1 |
| 15 | 4186388 | EQUIPED HOUSING HELIX FIRST DN80 DWA KIT | 1 |
| 15.1 | | > PUMP CASING MONO.GJL M+8" DN80 DWA | 1 |
| 15.2 | | > HYD.SUP.M+8" ONE PIECE HOUSING N80 DWA | 1 |
| 15.3 | 4106048 | > DRAIN/PRIMING PLUG EPDM HELIX FIRST KIT | 1 |

| Item | Article no. | Description | Quantity |
|---|---|---|---|
| 15.3A | | >> DRAIN AND PRIMING PLUG-VMI10"-304 | 1 |
| 15.3B | 4032293 | >> O-RING-10x3-EPDM-KTW/WRC | 1 |
| 15.3C | 4233957 | >> O-RING ID.9 EPDM VP. | 1 |
| 7.3 | 4179571 | > O-RING HOUSING PIPE HELIX22/36/52 VP. | 1 |
| 13.1A | 4161200 | > NECK RING 1.STAGE HELIX V36/52 KIT | 1 |
| | | >> NECK-RING-M+36/52 | 1 |
| | | >> HYDRAULIC SUPPORT CAP M+36/52 304 | 1 |
| | | >> SCREW TCL M3X8 A4 POZIDRIV | 1 |

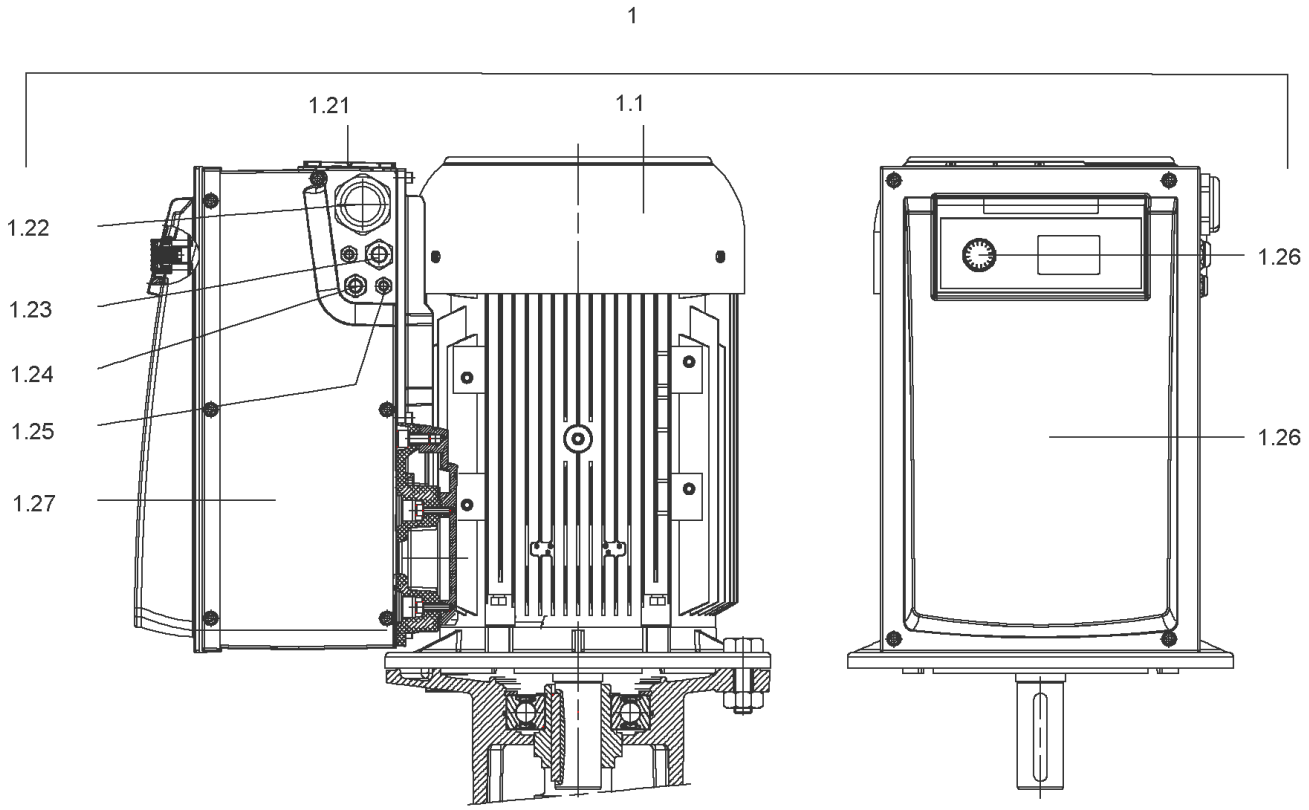
1
1.21
1.1
1.22
1.23
1.24
1.25
1.27
1.26
1.26

## DRIVE HELIX VE5205-IE2-ARC KIT

| Item | Article no. | Description | Quantity |
|---|---|---|---|
| 1.1 | | M18.5-2T540P55V1-160F300-N42-IE2 | 1 |
| | | SPARE PARTS MOTOR:ON REQUEST | 1 |
| 1.21 | 2132103 | FAN LARGE TL6/7 FF KIT | 1 |
| 1.25 | 2132097 | CABLE CONNECTION M12 TL6/7 FF VP. | 1 |
| 1.24 | 2132098 | CABLE CONNECTION M16 TL6/7 FF VP. | 1 |
| 1.23 | 2132099 | CABLE CONNECTION M20 TL6/7 FF VP. | 1 |
| 1.22 | 2132101 | CABLE CONNECTION LARGE M40 TL6/7 FF VP. | 1 |
| 1.27 | 2132104 | COVER SIDE TL6/7 FF CPL.VP. | 1 |
| 1.26 | 2132452 | MODULE COVER/BUTTON TL6/7 FF VP. | 1 |

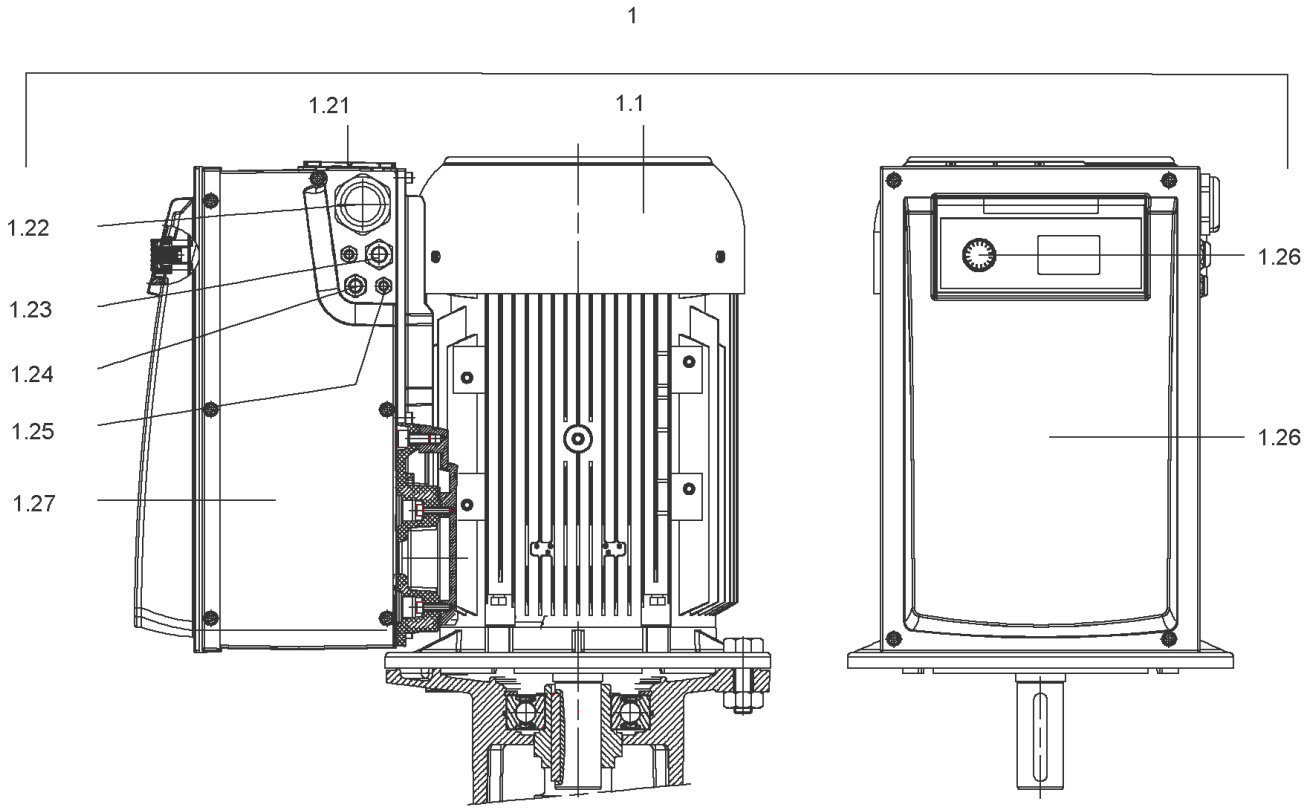
1
1.21
1.1
1.22
1.23
1.24
1.25
1.27
1.26
1.26

## DRIVE HELIX VE5205-IE4-WEG KIT (4213695)

| Item | Article no. | Description | Quantity |
|---|---|---|---|
| 1.1 | | M18,5-2T540P55V1-180F30-N42-ADAP-IE4-WEG | 1 |
| | | SPARE PARTS MOTOR:ON REQUEST | 1 |
| 1.21 | 2132102 | FAN SMALL TL6/7 FF KIT | 1 |
| 1.25 | 2132097 | CABLE CONNECTION M12 TL6/7 FF VP. | 1 |
| 1.24 | 2132098 | CABLE CONNECTION M16 TL6/7 FF VP. | 1 |
| 1.23 | 2132099 | CABLE CONNECTION M20 TL6/7 FF VP. | 1 |
| 1.22 | 2132100 | CABLE CONNECTION SMALL M40 TL6/7 FF VP. | 1 |
| 1.27 | 2132104 | COVER SIDE TL6/7 FF CPL.VP. | 1 |
| 1.26 | 2132452 | MODULE COVER/BUTTON TL6/7 FF VP. | 1 |

## COUPLING D.20XD.38 FF300 KIT (4143966)

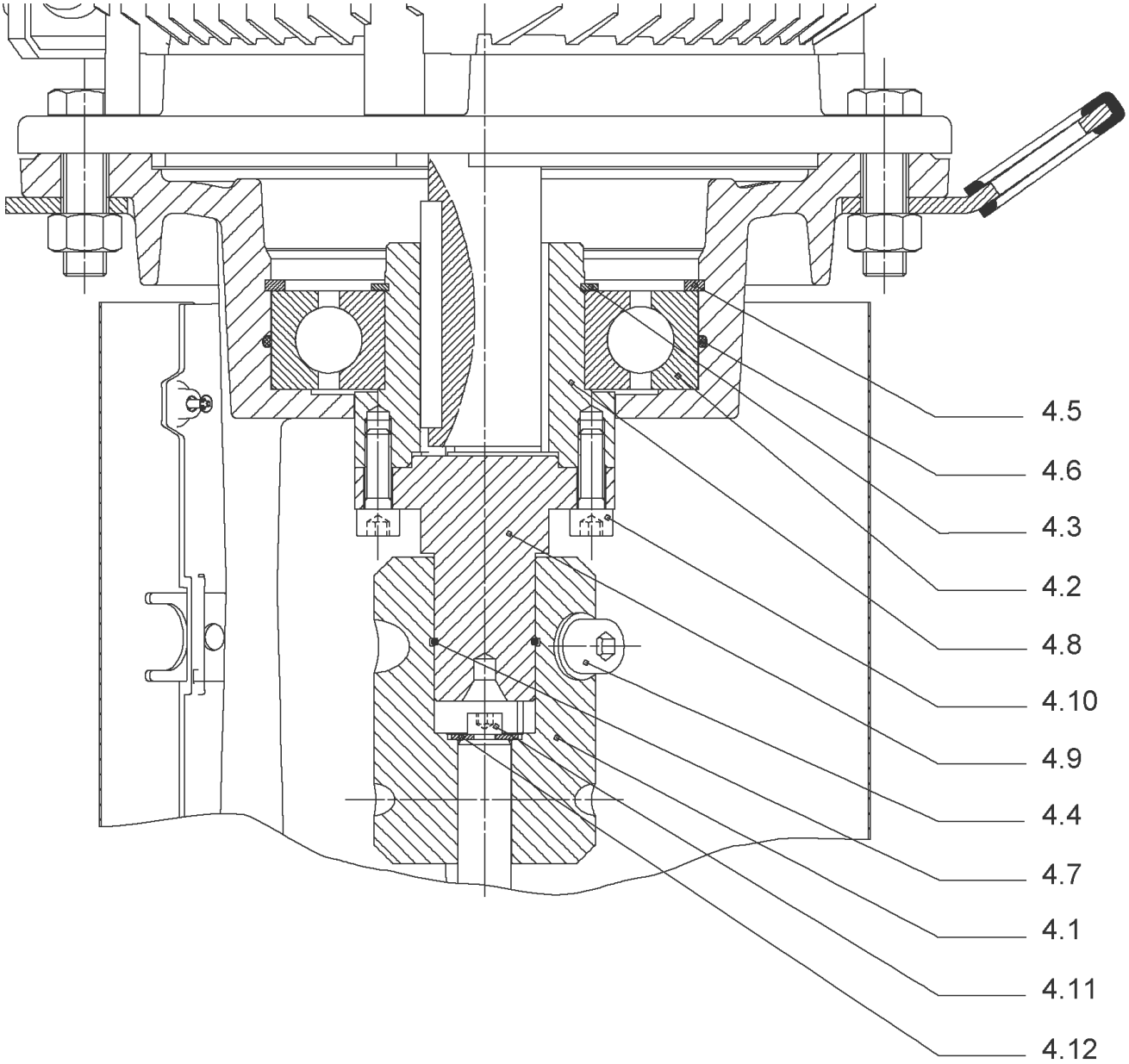

## COUPLING D.20XD.38 FF300 KIT (4143966)

| Item | Article no. | Description | Quantity |
|---|---|---|---|
| 4.1 | 4179590 | COUPLING 2 PARTS D.20XD.38XL115 VP. | 1 |
| 4.2 | 2123699 | BALL BEARING 6312/2Z-C4 (HT) VP. | 1 |
| 4.3 | 63428 | CIRCLIP-FOR-SHAFT-D60x2 | 1 |
| 4.4 | 2130991 | SCREW M12X30 ISO4762 8.8 ZN(4 PIECES) | 1 |
| 4.5 | 4032277 | CIRCLIP-HOLE-130x4 | 1 |
| 4.6 | 4006725 | O-RING ID.132,94x3,53 NBR70SR | 1 |
| 4.7 | 2130992 | RETAINING RING D.35xD.2,5 DIN7993 VP. | 1 |
| 4.8 | 4179591 | HUB D.42xD.60 VP. | 1 |
| 4.9 | 2130994 | SPACER D.38XD.55 VP. | 1 |
| 4.10 | 4094462 | SCREWS M10 ( 4 PIECES ) | 1 |
| 4.11 | 4233959 | SCREW M8x16 VP. | 1 |
| 4.12 | | SERRATED LOCK WASHER Ø8.2XØ25X35X2 | 1 |

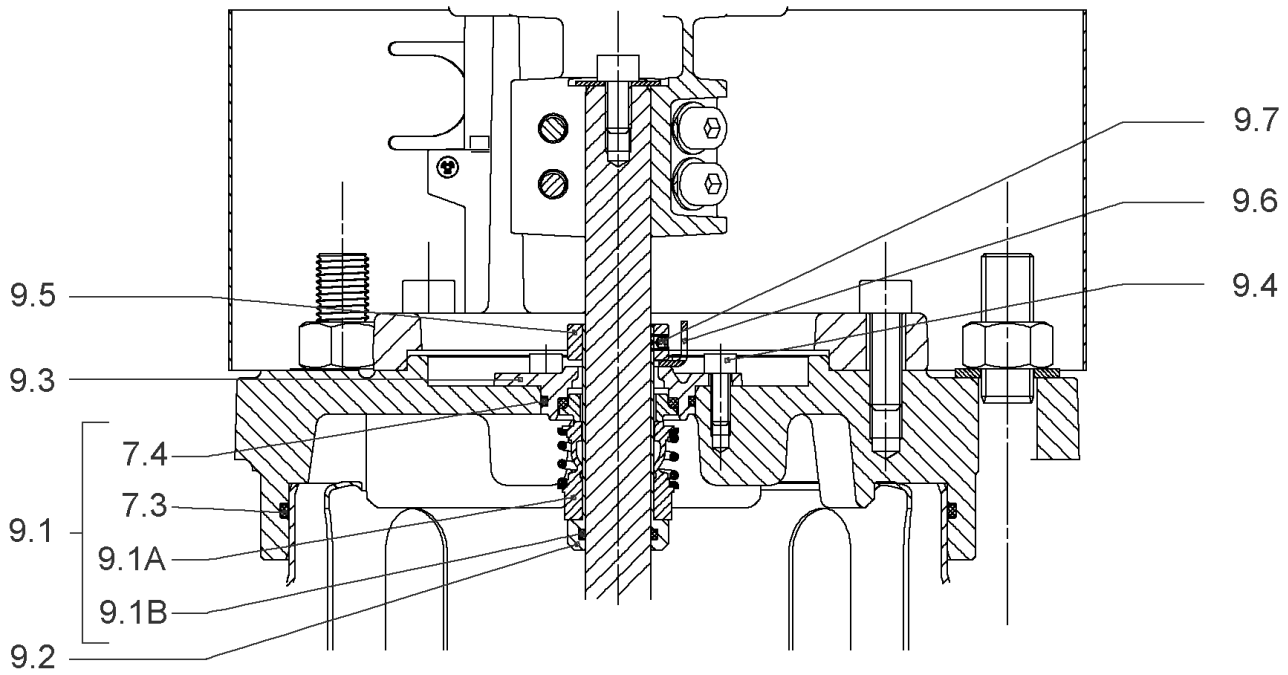
9.7
9.6
9.4
9.5
9.3
7.4
7.3
9.1
9.1A
9.1B
9.2

## CARTRIDGE HELIX22-36-52 O/E KIT (4143973)

| Item | Article no. | Description | Quantity |
|---|---|---|---|
| 9.1 | 4143974 | SEAL-KIT-HELIX22-36-52 O/E | 1 |
| 7.3 | 4179571 | > O-RING HOUSING PIPE HELIX22/36/52 VP. | 1 |
| 7.4 | 4179572 | > O-RING ID.42.52X2.62 EPDM VP. | 1 |
| 9.1A | 4179573 | > M.SEAL.HELIX22-36-52 O/E VP. | 1 |
| 9.1B | 4179574 | > O-RING ID.20x2.65 EPDM VP. | 1 |
| 9.2 | 4179566 | SHAFT SLEEVE D.20/20X60 1.4404 VP. | 1 |
| 9.3 | 4179567 | RING HOLDER Ø22 1.4301 VP. | 1 |
| 9.4 | 4176520 | SCREW CH M5x5 A4-70 ( 3PIECES ) | 1 |
| 9.5 | 4179568 | DRIVE RING D.31/22.1x11 MACH.VP. | 1 |
| 9.6 | 4179569 | TOOL M.S.CART.HELIX 8'' VP. | 1 |
| 9.7 | 4179570 | SCREW M6X16 ISO4762 8.8 GEOMET(4 PIECES) | 1 |

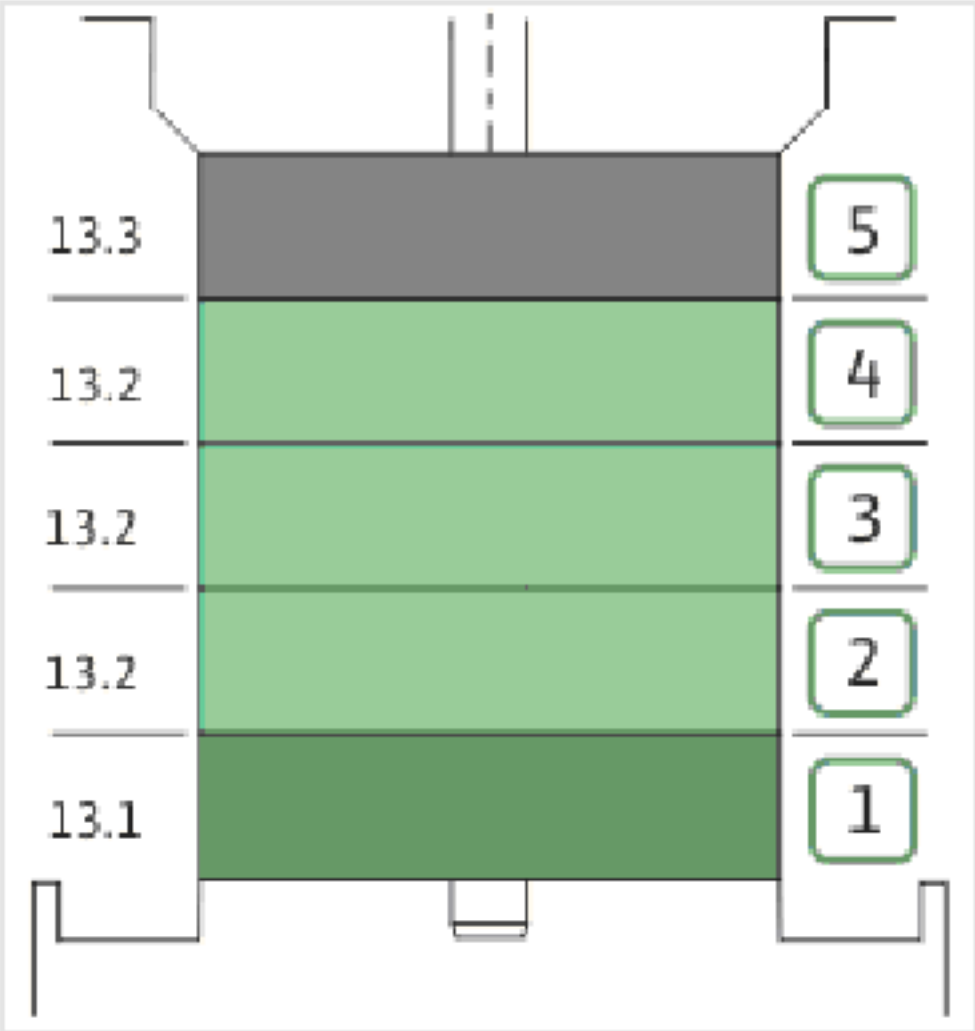
13.3
13.2
13.2
13.2
13.1
5
4
3
2
1

| Item | Article no. | Description | Quantity |
|---|---|---|---|
| 13.1 | 4164727 | INTERMEDIAIRE STAGE HELIX 52 1.4301 KIT | 1 |
| | | > SLEEVE-SPACER-D22XL30,42-316L | 1 |
| | | > MACH.BEARING-DIFFUSER+NR-M+52-304 | 1 |
| | | > SHAFT-SLEEVE-D26xD22x16-CW | 1 |
| | | > SPACER WASHER D22,3XD36 L3-316L | 1 |
| | | > IMPELLER-H2-M+52-304 | 1 |
| 13.1A | 4161200 | > NECK RING 1.STAGE HELIX V36/52 KIT | 1 |
| | | >> NECK-RING-M+36/52 | 1 |
| | | >> HYDRAULIC SUPPORT CAP M+36/52 304 | 1 |
| | | >> SCREW TCL M3X8 A4 POZIDRIV | 1 |
| 13.2 | 4164728 | INTERMEDIATE STAGE HELIX 52 1.4301 KIT | 1 |
| | | > MACH.STD-DIFFUSER+NR-M+52-304 | 1 |
| | | > IMPELLER-H5-M+52-304 | 1 |
| 13.3 | 4164729 | UPPER-STAGE HELIX 52 1.4301 KIT | 1 |
| | | > STOP COLLAR OF IMPELLER L27,6-Ø22-316L | 1 |
| | | > SLEEVE-SPACER-D22XL16,66-316L | 1 |
| | | > SPACER WASHER D22,3XD36 L3-316L | 1 |
| | | > IMPELLER-H2-M+52-304 | 1 |
| | | > MACH.STD-DISCHARGE-CHAMBER-M+52-304 | 1 |

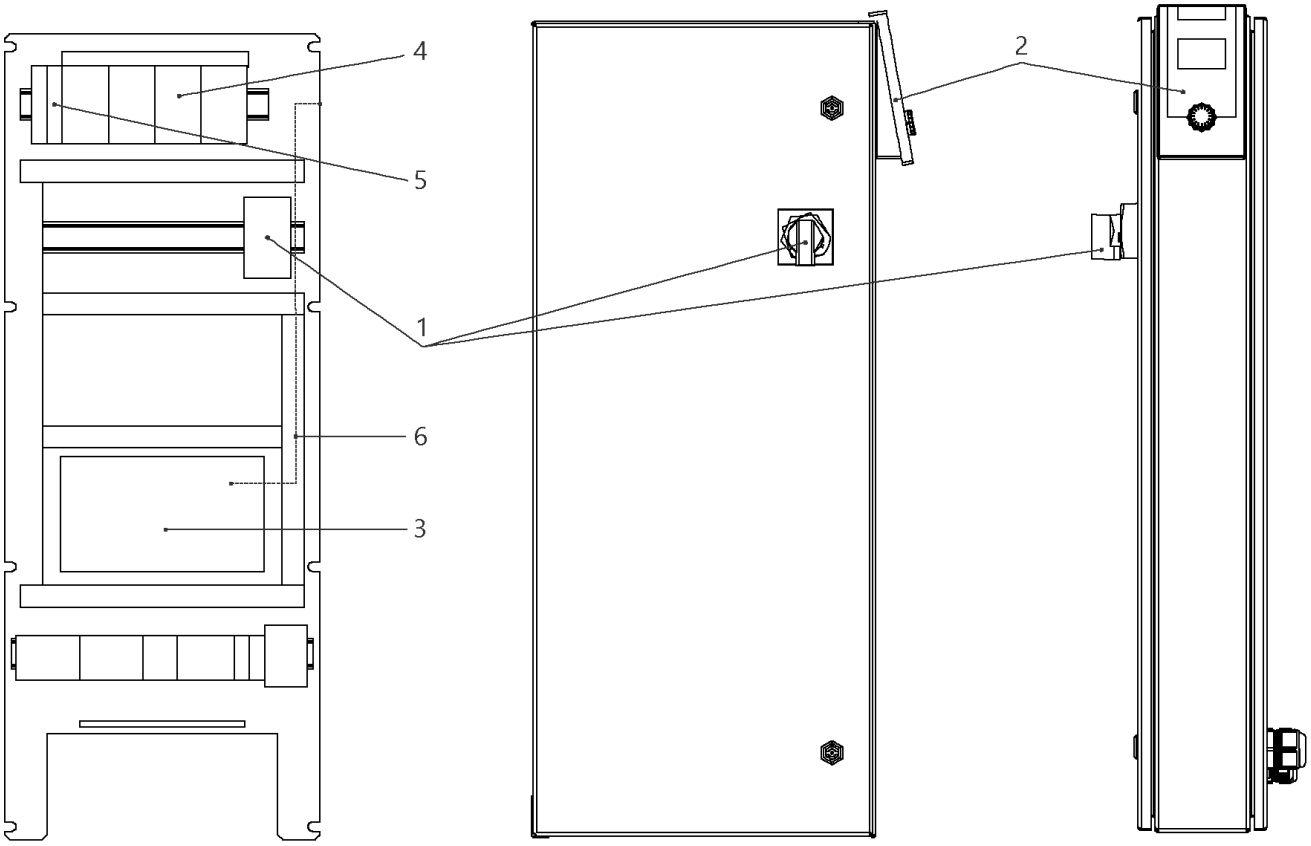
4
5
1
6
3
2

## W-CTRL-SCE-B-4x37,5A-T34-FM-ND4-AVC-PKG

| Item | Article no. | Description | Quantity |
|---|---|---|---|
| 1 | 4205940 | MAIN SWITCH OT200E3 VP. | 1 |
| 1 | 2090420 | HANDLE OHY 65J6/SHAFT OXP6x290 KIT | 1 |
| 2 | 4184784 | CONTROL PANEL HMI SC KIT | 1 |
| 2 | 4185259 | ASSEMBLY DISPLAY SC PKG VP. | 1 |
| Note: DISPLAY ALONE / PLATINE SEULE | | | |
| 3 | 4185257 | ASSEMBLY CPU SCe Booster VP. | 1 |
| 4 | 2051221 | AUTOM.CIRCUIT BREAKER S203 B50 FOR22kW | 1 |
| 5 | 2046288 | CIRCUIT BREAKER S201 B16 | 1 |
| 6 | 4194956 | PATCH CABLE RJ45 CAT6 1,0M BLUE SC-PANEL | 1 |